D.O.O. "VODOVOD I KANALIZACIJA"

Broj 03 – 3661

Danilovgrad 04.12. 2018 god

CONTRACT AGREEMENT

THIS CONTRACT AGREEMENT is made on the 4th day of December **2018**.

BETWEEN

(1) *D.O.O. "Vodovod i kanalizacija" Danilovgrad*, Limited liability company founded by Municipality of Danilovgrad, having its principal place of business at *Caja Scepanovica bb Danilovgrad, 81410 State of Montenegro* (hereinafter called "the Employer"),

and

(2) *Karkanias Environmental Technology S.A.*, a corporation incorporated under the laws of *Greece* and having its principal place of business at *Industrial Area of Larisa, Larisa P.C 41 004 Greece* (hereinafter called "the Contractor").

WHEREAS the Employer invited tenders for the execution of the Works, described as *Construction of Wastewater Plant and* has accepted a Tender by the Contractor for the execution and completion of these Works and the remedying of any defects therein, and the Employer agrees to pay the Contractor the Contract Price or such other sum as may become payable under the provisions of the Contract at the times and in the manner prescribed by the Contract.

The Employer and the Contractor agree as follows:

1. In this Agreement words and expressions shall have the same meanings as are respectively assigned to them in the Contract documents referred to.

2. The following documents shall be deemed to form and be read and construed as part of this Agreement. This Agreement shall prevail over all other Contract documents.

(a) the Letter of Acceptance
(b) the Tender
(c) the Addenda No.s 1,2 and 3
(d) the Particular Conditions
(e) the General Conditions
(f) the Specification
(g) the Drawings; and
(h) the completed Schedules,

3. In consideration of the payments to be made by the Employer to the Contractor as indicated in this Agreement, the Contractor hereby covenants with the Employer to execute the Works and to remedy defects therein in conformity in all respects with the provisions of the Contract.

4. The Employer hereby covenants to pay the Contractor in consideration of the execution and completion of the Works and the remedying of defects therein, the Contract Price or such other sum as may become payable under the provisions of the Contract at the times and in the manner prescribed by the Contract.

Agreement to be executed in accordance with the laws of State of Montenegro on the day, month and year indicated above.

Signed by:

For and on behalf of the Employer in the presence of Darko Đuričković, Executive Director

Witness:

Name: Zoran Dragović

Address: ul. Čaja Šćepanovića bb

Date: 4.12.2018, Danilovgrad

Signed by:

ΚΑΡΚΑΝΙΑΣ - ΤΕΧΝΟΛΟΓΙΚΗ ΠΕΡΙΒΑΛΛΟΝΤΙΚΗ Α.Ε.
ΒΙΟΜΗΧΑΝΙΚΗ ΠΕΡΙΟΧΗ ΛΑΡΙΣΑΣ
Τ.Θ. 3053 - Τ.Κ. 410 04
ΤΗΛ. 2410 541386
Α.Φ.Μ. 095244711 - Β' ΔΟΥ ΛΑΡΙΣΑΣ

for and on behalf the Contractor in the presence of Georgios Karkanias, President

Witness:

Name: APOSTOLOS KARKANIAS

Address: FARMAKI 3, 41222 LARISA

Date: 4.12.2018.

DOO „VODOVOD I KANALIZACIJA"
DANILOVGRAD
03-3584
Danilovgrad, 26.11.2018. godine

81410 Danilovgrad, Jefta – Čaja Šćepanovića bb e-mail: jkzpdanilovgrad@t-com.me
Tel/fax: 020/811-550

LETTER OF ACCEPTANCE

26.11.2018

TO: Karkanias Environmental Technology S.A.

Industrial Area of Larisa, Larisa P.C 41 004 Greece

This is to notify you that your tender dated 13.09.2018 for the execution of the "Construction of Wastewater Plant" for the Contract Price of **2,390,000.00 EURO** (two million three hundred ninety thousand, or equivalent thereof, as corrected and modified in accordance with the Instructions to Tenderers, is hereby accepted by our Company.

You are hereby required:

(a) to submit the Performance Security according to Instruction to Tenderers para 43.1 and Particular Conditions of Contract article 4.2 in the form provided in Volume II.iv of the tender documents.

(b) sign the attached Contract Agreement and return according to Instruction to Tenderers para 42.2; and

(c) to commence performance of the said contract in accordance with the Contract Documents.

Authorised Signature.....

Name and Title of Signatory: Darko Đuričković, Executive Director

Name of Company: DOO "Vodovod i kanalizacija" Danilovgrad

Attachment: Contract Document

FOLDER I

KARKANIAS

Folder I - TENDER DOCUMENTS

Contents

Document			Section in Folder
(a)		**The Tender Form – Covenant of Integrity**	1
(b)	**Attach. 1**	**Power of Attorney**	2
(c)	**Attach. 2**	**Qualification of Tenderer**	
		ELI-1: Tenderer's Information Sheet	3
		ELI-2: JVCA Information Sheet	4
		CON-2: Historical Contract Non-Performance	5
		FIN - 1: Financial Situation	6
		FIN - 2: Average Annual Construction Turnover	7
		FIN - 3: Financial Resources	8
		FIN - 4: Current Contract Commitments / Works in Progress	9
		EXP - 1: General Construction Experience	10
		EXP - 2: Specific Construction Experience	11
(d)	**Attach. 3**	**Conformity of the Facilities**	
		Technical Proposal	12
(e)	**Attach. 4**	**Subcontractors proposed by the Tenderer**	
		Suppliers list & Manufacturer Authorization Forms	13
(f)	**Attach. 5**	**Deviations**	
		Deviations	14
(h)	**Attach. 7**	**Supplementary Information**	
		Site organization and Method Statement	15
		Mobilization and Construction Schedules	16
		Contractor´s Equipment	17
		Contractor´s Personnel	18
		Details of Proposed Insurer	19
		Details of Proposed Bank Issuing Performance and Advance Payment Securities	20

GEORGIOS KARKANIAS
PRESIDENT

03/12/18

Attachment 1 to Tender Form

COVENANT OF INTEGRITY

To: D.O.O. "Vodovod i kanalizacija" Danilovgrad

"We declare and covenant that neither we nor anyone, including any of our directors, employees, agents, joint venture partners, consultants or sub-contractors, where these exist, acting on our behalf with due authority or with our knowledge or consent, or facilitated by us, has engaged, or will engage, in any Prohibited Practise (as defined below) in connection with the tendering process or in the execution or supply of any works, goods or services for **DANILOVGRAD MUNICIPAL INFRASTRUCTURE-CONSTRUCTION OF WASTEWATER PLANT** (the "Contract") and covenant to so inform you if any instance of any such Prohibited Practise shall come to the attention of any person in our organization having responsibility for ensuring compliance with this Covenant.

We shall, for the duration of the tender process and, if we are successful in our tender, for the duration of the Contract, appoint and maintain in office an officer, who shall be a person reasonably satisfactory to you and to whom you shall have full and immediate access, having the duty, and the necessary powers, to ensure compliance with this Covenant.

We declare and covenant that, except for the matters disclosed in this Covenant of Integrity:

i. We, our subsidiaries and affiliates, and all of our directors, employees, agents or joint venture partners, where these exist, have not been convicted in any court of any offence involving a Prohibited Practice in connection with any tendering process or provision of works, goods or services during the ten years immediately preceding the date of this Covenant:
ii. None of our directors, employees, agents or a representatives of a joint venture partner, where these exist, has been dismissed or has resigned from any employment on the grounds of being implicated in any Prohibited Practise:
iii. We, our subsidiaries and affiliates and our directors, employees, agents or joint venture partners, where these exist, are not prohibited from participation in a tendering procedure on the grounds of having been found by the final judgement of a judicial process or a finding by the enforcement (or similar) mechanism of another international organisation to have engaged in a Prohibited Practice:
iv. We, our subsidiaries and affiliates, as well as any subcontractors, or suppliers or affiliates of the subcontracts or supplier are not subject to any sanction imposed by resolution of the United Nations Security Council.

For the purpose of this Covenant, the terms set forth below define Prohibited Practises as:

i) *"corrupt practice" which means the offering, giving, receiving or soliciting, directly or indirectly, of anything of value to influence improperly the actions of another party;*
ii) *"fraudulent practise" which means any act or omission, including a misrepresentation, that kwowingly or recklessly misleads, or attemps to mislead, a party to obtain a financial or other benefit or to avoid an obligation;*
iii) *"coercive practice" which means impairing or harming, or threatening to impair or harm, directly or indirectly, any party or the property of the party to influence improperly the actions of a part;and,*
iv) *"collusive practice" which means an arrangement between two or more parties designed to achieve an improper purpose, including influencing improperly the actions of another party*
v) *"theft" which means theft which means the misappropriation of property belonging to another party*
vi) *"misuse of the Bank's resources" means improper use of the Bank's resources, committed either intentionally or through reckless disregard;and,*
vii) *"obstructive practise" which means (i) destroying, falsifying, altering or concealing of evidence material to a Bank investigation, which impedes the Bank's investigation; (ii) making false statements to investigators in order to materially impede a Bank investigation*

GEORGIOS KARKANIAS
PRESIDENT

03/10/18

into allegations of a Prohibited Practise; (iii) failing to comply with requests to provide information, documents or records in connection with a Bank investigation; (iv) threatening, harassing or intimidating any party to prevent it from disclosing its knowledge of matters relevant to a Bank investigation or from pursuing the investigation; or (v) materially impeding the exercise of the Bank's contractual rights of audit or inspection or access to information.

Following the submission of our tender, we grant the project financier, the European Bank for Reconstruction and Development (EBRD) and/or persons appointed by them, the right of inspection of our, and any proposed subcontractors, accounts and records and permission to have any such accounts and records audited by auditors appointed by the Bank, if required by the Bank. We accept to preserve these records generally in accordance with applicable law but in any case for at least six years from the date of substantial performance of the Contrac.

We further declare that no affiliate of the Employer is participating in our tender in any capacity whatsoever.

KARKANIAS ENVIRONMENTAL

TECHNOLOGY S.A.

GEORGIOS KARKANIAS

PRESIDENT

GEORGIOS KARKANIAS
PRESIDENT

03/12/18

NUMBER 18

POWER OF ATTORNEY

In the town of Larissa, today on the eighth (8) of the month of September of the year two thousand seventeen (2017), day of Friday, at my office of the building, located on the third floor of 4 Kouma str., before me the Notary of Larissa AIKATERINI VASILEIOU, daughter of Dimitrios and Valentini, having as my seat and residence Larissa, with TIN 047010021 belonging of the P.F.S. A' of Larissa, appeared the below mentioned, non-exempted by the law, Vasiliki Karkania, of Apostolos and Stamatia, with T.I.N. 128996162, P.F.S. A' of LARISSA, chemical engineer, born in Larissa on 15-3-1985, where she resides on 3 Farmaki str., holder of the Police Identity Card no. AK 407175/11-11-2011 by the S.S. Of Larissa, who acts in the present as managing director and representative of the anonymous society denominated: "KARKANIAS ENVIRONMENTAL TECHNOLOGY S.A." and with the distinctive title: "KARKANIAS" having its seat in the IND. AR. Of LARISSA with T.I.N. 095244711, P.F.S. B' of Larissa, with GEMI number: 026564640000. This company was incorporated with the contract no. 21.180 / 10-04-2001 of the notary of Larissa Eleni - Evgenia Romosiou - Kleitsaki, recorded in the Registry of Anonymous Societies on 12-04-2001, with number 48779/31/B/01/12, approved and the license number K 1009/12-4-2001 was administered by the Prefect of Larissa, the summary of its memorandum, the registration of the approval and the license were published in the G.G. Number 2.393/30-04-2001 (Issue S.A. And L.L.C.), copies of which are attached in my present act. After successive modifications of the above memorandum, as in force coded, it has been registered in the company's share in GEMI, a copy of which

GEORGIOS KARKANIAS
PRESIDENT

03/12/18

GEORGIOS KARKANIAS
PRESIDENT

02/12/18

with protocol number: 350511.495898, is attached to my present act. The last Board of Directors, managing the above company, was elected with five year tenure, ending on 13-12-2021, from the General Assembly of its shareholders from 14-12-2016 and was constituted with the minutes of the Board of Directors from 14-12-2016, the relevant minutes were registered in the competent G.E.MI. Service with code number 861643, as it results from the notification with prot. No. 727949/20-12-2016 of the above service, which is attached in the present, and until today it has not been further modified, or has been dissolved, or placed in bankruptcy or liquidation, as responsibly declared by the above representative of the company. The person appearing here was authorized by the Board of Directors of the above company for signing the present with the minutes of the Board of Directors no. 979/07-09-2017, a copy of which is attached in the present. The person appearing here asked me to compile this act, with which she declared that the company she represents, namely the anonymous society having its seat in the Municipality of Tempi (IN. AR. Of LARISSA) anonymous society with the denomination "KARKANIAS ENVIRONMENTAL TECHNOLOGCY S.A." in order to participate in the tender for the assumption of the work with full title: Danilovgrad Municipal Infrastructure – construction of wastewater plant, Tender No: EBRD ME DAN 9000, on the state of Montenegro (Danilovgrad Municipal Infrastructure – construction of wastewater plant, Tender No: EBRD ME DAN 9000), which takes place in Caja Scepanovica bb Danilovgrad 81410 State of Montenegro, on September 14 2017 or at any other date after postponement, designates and reinstates its special attorney, representative and process agent: 1) Georgios Karkanias of Apostolos and Stamatia, born on 03-08-1983 in Larissa - Greece, where he resides on 3 Farmaki str., holder of the Hellenic Republic Passport no. AK5153599, and 2) Aristeidis Oikonomou of Dimitrios and Panagiota, born on 22-09-1969 on Larissa - Greece, where he resides at Terpsithea Larissa, holder of the Passport

GEORGIOS KARKANIAS
PRESIDENT

03/12/18

GEORGIOS KARKANIAS
PRESIDENT

05/12/18

No. C5HTVTZHF/09-06-2009 of the Republic of Germany, to whom it gives the special order and power of attorney, in its place, in its name (the company "KARKANIAS ENVIRONMENTAL TECHNOLOGY S.A.") and on its behalf acting either jointly or individually, to submit the file of the tender, before the tender Committee for the undertaking of the above work. Furthermore to authorize them to sign and submit any relative document during the whole tender. The above representative of the company "KARKANIAS ENVIRONMENTAL TECHNOLOGY S.A.", with the capacity she appears in the present act, she also declared responsibly and according to the provisions of the L. 1599/1986 that the residence declared and mentioned in the beginning of the present and the company's seat represented is the real, legal and true, and the company has not been dissolved or placed under bankruptcy or liquidation. The person who appeared, with her capacity in the present, declares that she approves and recognizes from now, all the actions of the above representatives, which refer to the above orders, as legal, valid, strong and unassailable and legally binding the company represented by them and that this power of attorney is valid until revoked and its revocation is legally notified. In witness whereof this power of attorney was compiled, in two (2) leaves. A megarosimo stamp (1,00) euro was affixed in the original and (2,00) euros for the copy. For the rights of the present, as well for the rights of issuing one copy, (36,00) euros were collected. On the collected rights, VAT was collected, euros (8,64). I read this power of attorney loudly for the representative of the principal to hear it, who certified its whole content and singed it, as well as myself the notary, as provided by the law.

THE PRINCIPAL'S REPRESENTATIVE THE NOTARY

Exact Translation from the attached Greek Original

Larissa 11/09/2017

The official translator

Sokratis Kyriazis

NETWORK OF TRANSLATION CENTERS
ERMINIA
SOKRATIS KYRIAZIS
TEL. & FAX VAT
2410 626055 045564280

GEORGIOS KARKANIAS
PRESIDENT

03/12/18

GEORGIOS KARKANIAS
PRESIDENT

03/12/18

ΑΙΚΑΤΕΡΙΝΗ Δ. ΒΑΣΙΛΕΙΟΥ
ΣΥΜΒΟΛΑΙΟΓΡΑΦΟΣ
ΚΟΥΜΑ 4 - 3ος ΟΡΟΦΟΣ - 41222 - ΛΑΡΙΣΑ
ΤΗΛ. / FAX : 2413019775
ΑΦΜ : 047010021 - Α' ΔΟΥ ΛΑΡΙΣΑΣ
e-mail : katvas9987@yahoo.gr

ΑΝΤΙΓΡΑΦΟ

ΑΡΙΘΜΟΣ 18

ΠΛΗΡΕΞΟΥΣΙΟ

Στην πόλη της Λάρισας, σήμερα στις οκτώ (8) του μηνός Σεπτεμβρίου του έτους δύο χιλιάδες δέκα επτά (2017), ημέρα Παρασκευή, στο γραφείο μου, που βρίσκεται στον τρίτο όροφο της επί της οδού Κούμα αριθμός 4 οικοδομής, ενώπιον εμού της Συμβολαιογράφου Λάρισας **ΑΙΚΑΤΕΡΙΝΗΣ ΒΑΣΙΛΕΙΟΥ** του Δημητρίου και της Βαλεντίνης, που έχω έδρα και κατοικία στη Λάρισα, με ΑΦΜ 047010021 ανήκουσα στην Δ.Ο.Υ. Α' Λάρισας, παρουσιάσθηκε η παρακάτω μη εξαιρούμενη από το νόμο **Βασιλική Καρκανιά του Αποστόλου και της Σταματίας,** με Α.Φ.Μ. 128996162 της Δ.Ο.Υ. Α' ΛΑΡΙΣΑΣ, χημικός μηχανικός, που γεννήθηκε στη Λάρισα στις 15-03-1985, όπου και κατοικεί στην οδό Φαρμάκη αριθμός 3, κάτοχος του Δελτίου Αστυνομικής Ταυτότητας υπ' αριθμόν ΑΚ 407175/11-11-2011 εκδοθέν από την Υ.Α Λάρισας, η οποία ενεργεί στο παρόν ως Διευθύνουσα Σύμβουλος και εκπρόσωπος της ανωνύμου εταιρείας με την επωνυμία: «**ΚΑΡΚΑΝΙΑΣ ΤΕΧΝΟΛΟΓΙΑ ΠΕΡΙΒΑΛΛΟΝΤΟΣ Α.Ε.**» και με τον διακριτικό τίτλο: «**ΚΑΡΚΑΝΙΑΣ**», που εδρεύει στην ΒΙ.ΠΕ. ΛΑΡΙΣΑΣ, με Α.Φ.Μ. 095244711 της Δ.Ο.Υ. Β' Λάρισας, με αριθμό ΓΕΜΗ 026564640000. Η εταιρεία αυτή συστάθηκε αρχικά με το υπ' αριθμόν 21.180/10-04-2001 συμβόλαιο της συμβολαιογράφου Λάρισας Ελένης - Ευγενίας Ρομοσιού -

GEORGIOS KARKANIAS
PRESIDENT
03/12/18

Κλειτσάκη, καταχωρήθηκε στο Μητρώο Ανωνύμων Εταιρειών στις 12-04-2001, με αριθμό 48779/31/Β/01/12, εγκρίθηκε δε και της παρασχέθηκε η άδεια με την με αριθμό Κ 1009/12-4-2001 απόφαση του Νομάρχη Λάρισας, περίληψη δε του καταστατικού της, της καταχώρησης της έγκρισης και της αδείας δημοσιεύθηκαν στο με αριθμό 2.393/30-04-2001 Φ.Ε.Κ (Τεύχος Α.Ε. και Ε.Π.Ε.), αντίγραφα των οποίων προσαρτώνται στην παρούσα πράξη μου. Μετά από διαδοχικές τροποποιήσεις το ως άνω καταστατικό, όπως ισχύει κωδικοποιημένο, έχει καταχωρηθεί στην μερίδα της εταιρίας στο ΓΕΜΗ, αντίγραφο του οποίου με αριθμό πρωτοκόλλου 350511.495898, προσαρτάται στην παρούσα πράξη μου. Το τελευταίο Διοικητικό Συμβούλιο, που διοικεί την ως άνω εταιρία, εκλέχθηκε με πενταετή θητεία λήγουσα την 13-12-2021, από την από 14-12-2016 Γενική Συνέλευση των μετόχων της και συγκροτήθηκε σε σώμα με το από 14-12-2016 πρακτικό του Διοικητικού της Συμβουλίου, το δε σχετικό πρακτικό καταχωρήθηκε στην αρμόδια υπηρεσία Γ.Ε.ΜΗ. με κωδικό αριθμό 861643, όπως προκύπτει από την με αριθμό πρωτοκόλλου 727949/20-12-2016 ανακοίνωση της ως άνω υπηρεσίας, η οποία προσαρτάται στην παρούσα, και μέχρι σήμερα δεν έχει δε τροποποιηθεί περαιτέρω, ούτε έχει λυθεί ή τεθεί σε πτώχευση ή σε εκκαθάριση, όπως μου δήλωσε υπεύθυνα η πιο πάνω εκπρόσωπος της εταιρίας. Η εδώ εμφανιζόμενη, εξουσιοδοτήθηκε από το Διοικητικό Συμβούλιο της ως άνω εταιρείας για την υπογραφή της παρούσης με το υπ' αριθμόν 979/07-09-2017 πρακτικό του Διοικητικού Συμβουλίου, αντίγραφο του οποίου προσαρτάται στην παρούσα. Η εδώ εμφανιζόμενη μου ζήτησε να συντάξω την πράξη αυτή, με την οποία δήλωσε ότι η εταιρεία που

GEORGIOS KARKANIAS
PRESIDENT

03/12/18

εκπροσωπεί, δηλαδή η εδρεύουσα στο Δήμο Τεμπών (ΒΙ.ΠΕ. ΛΑΡΙΣΑΣ) ανώνυμη εταιρεία με την επωνυμία «ΚΑΡΚΑΝΙΑΣ ΤΕΧΝΟΛΟΓΙΑ ΠΕΡΙΒΑΛΛΟΝΤΟΣ Α.Ε.» προκειμένου να συμμετάσχει στον διαγωνισμό για την ανάληψη του έργου με πλήρη τίτλο: Ντάνιλοβγκράντ Μουνίσιπαλ Ινφραστράκτσιουρ – κονστράξιον οβ γουέιστγουότερ πλαντ, Τέντερ Νο: EBRD ΜΕ DAN 9000, στο κράτος του Μαυροβουνίου (Danilovgrad Municipal Infrastructure – construction of wastewater plant, Tender No: EBRD ME DAN 9000), ο οποίος διενεργείται στη Κάγια Σκεπανόβικα μπιμπι Ντανίλοβγκραντ 81410 Στέιτ οφ Μοντενέγκρο (Caja Scepanovica bb Danilovgrad 81410 State of Montenegro), στις 14 Σεπτεμβρίου 2017 ή και σε κάθε άλλη τυχόν μετ' αναβολή ημερομηνία, ορίζει και αποκαθιστά ειδικούς αυτής αντιπροσώπους, πληρεξουσίους και αντικλήτους της τους: 1) Γεώργιο Καρκανιά του Αποστόλου και της Σταματίας, που γεννήθηκε την 03-08-1983 στη Λάρισα - Ελλάδα, όπου και κατοικεί στην οδό Φαρμάκη αριθμό 3, κάτοχο του με αριθμό ΑΚ5153599 διαβατηρίου της Ελληνικής Δημοκρατίας, και 2) Αριστείδη Οικονόμου του Δημητρίου και της Παναγιώτας, που γεννήθηκε την 22-09-1969 στη Λάρισα - Ελλάδα, όπου και κατοικεί στην Τερψιθέα Λάρισας, κάτοχο του με αριθμό C5HTVTZHF/09-06-2009 διαβατηρίου της Δημοκρατίας της Γερμανίας, στους οποίους δίδει την ειδική εντολή και πληρεξουσιότητα ενεργώντας είτε από κοινού είτε ο καθένας μόνος του όπως αντ' αυτής, στο όνομα αυτής (της εταιρίας «ΚΑΡΚΑΝΙΑΣ ΤΕΧΝΟΛΟΓΙΑ ΠΕΡΙΒΑΛΛΟΝΤΟΣ Α.Ε.») και για λογαριασμό της να υποβάλλουν τον φάκελο προσφοράς, ενώπιον της Επιτροπής Διαγωνισμού για την ανάληψη του ανωτέρω έργου. Επίσης τους εξουσιοδοτεί όπως υπογράφουν και υποβάλλουν κάθε σχετικό έγγραφο καθ' όλη την διάρκεια του διαγωνισμού. Η παραπάνω εκπρόσωπος της εταιρίας «ΚΑΡΚΑΝΙΑΣ ΤΕΧΝΟΛΟΓΙΑ ΠΕΡΙΒΑΛΛΟΝΤΟΣ Α.Ε.», με την

GEORGIOS KARKANIAS
PRESIDENT

03/12/18

ιδιότητα που παρίσταται στην παρούσα πράξη μου, δήλωσε ακόμη υπεύθυνα και σύμφωνα με τις διατάξεις του Ν. 1599/1986 ότι η κατοικία της που δηλώθηκε και αναφέρθηκε στην αρχή αυτού και η έδρα της εταιρείας που εκπροσωπεί είναι η πραγματική, η νόμιμη και αληθινή, η δε εταιρία δεν έχει λυθεί ή τεθεί σε εκκαθάριση ή πτώχευση. Η εμφανισθείσα, με την ιδιότητα που παρίσταται στην παρούσα, δηλώνει ότι εγκρίνει και αναγνωρίζει από τώρα, όλες τις πράξεις των ως άνω εκπροσώπων, οι οποίες έχουν σχέση με τις πιο πάνω εντολές, ως νόμιμες, έγκυρες, ισχυρές και απρόσβλητες και νομικά δεσμεύουσες την εκπροσωπούμενη από αυτούς εταιρία και ότι το πληρεξούσιο αυτό ισχύει μέχρι να ανακληθεί και να γνωστοποιηθεί νόμιμα η ανάκλησή του. Σε βεβαίωση όλων των ανωτέρω συντάχθηκε το πληρεξούσιο αυτό, σε δύο (2) φύλλα. Επικολλήθηκε τέλος μεγαροσήμου (1,00) ευρώ για το πρωτότυπο και (2,00) ευρώ για το αντίγραφο. Για δικαιώματα του παρόντος, καθώς και για δικαιώματα εκδόσεως ενός αντιγράφου εισπράχθηκαν ευρώ (36,00). Επί των εισπραχθέντων δικαιωμάτων, εισπράχθηκε Φ.Π.Α. ευρώ (8,64). Το πληρεξούσιο αυτό διάβασα καθαρά και μεγαλόφωνα, για να το ακούσει η εκπρόσωπος της εντολέως, η οποία βεβαίωσε ολόκληρο το περιεχόμενό του και το υπέγραψε, καθώς και εγώ η συμβολαιογράφος, όπως ο νόμος ορίζει.

Η ΕΚΠΡΟΣΩΠΟΣ ΤΗΣ ΕΝΤΟΛΕΩΣ Η ΣΥΜΒΟΛΑΙΟΓΡΑΦΟΣ

Η ΣΥΜΒΟΛΑΙΟΓΡΑΦΟΣ
(Τ.Σ.) **Αικατερίνη Δ. Βασιλείου**
Ακριβές αντίγραφο - Λάρισα αυθημερόν
Η Συμβολαιογράφος Λάρισας

ΑΚΟΛΟΥΘΟΥΝ ΥΠΟΓΡΑΦΕΣ

Τα δικαιώματα του παρόντος αντιγράφου εισπράχθηκαν και αναφέρονται στο πρωτότυπο του συμβολαίου, μη απαιτούμενης της εκδόσεως ΔΑΠΥ, σύμφωνα με το άρθρο 3 παρ. 4 του Κ.Β. κ. Σ.

GEORGIOS KARKANIAS
PRESIDENT

03/12/18

Form ELI – 1: Tenderer's Information Sheet

a. Tenderer's Information	
Tenderer's legal name	"KARKANIAS ENVIRONMENTAL TECHNOLOGY S.A" Discriminative title "KARKANIAS"
In case of JVCA, legal name of each partner	
Tenderer's country of constitution	LARISA, GREECE
Tenderer's year of constitution	1980
Tenderer's legal address in country of constitution	INDUSTRIAL AREA OF LARISA, GREECE
Tenderer's authorized representative information (name, address, telephone numbers, fax numbers, e-mail address)	a) GEORGIOS KARKANIAS PRESIDENT/LEGAL REPRESENTATIVE Addr: 3, Farmaki str., 41222, Larisa Tel:+30 2410.541386, Fax:+30 2410.541354, e-mail: info@karkanias.gr b) ARIS OIKONOMOU Addr: Terpsithea, 41500, Larisa Tel:+30 2410.541386, Fax:+30 2410.541354, e-mail: info@karkanias.gr

Attached are copies of the following original documents.

✓ 1. In case of single entity, articles of incorporation or constitution of the legal entity named above, in accordance with ITT 4.1 and 4.2.

✓ 2. Authorization to represent the firm or JVCA named in above, in accordance with ITT 20.2.

☐ 3. In case of JVCA, letter of intent to form JVCA or JVCA agreement, in accordance with ITT 4.1.

☐ 4. In case of a goverrnment-owned entity, any additional documents not covered under 1 above required to comply with ITT 4.5.

GEORGIOS KARKANIAS
PRESIDENT

03/12/18

ELENI ROMOSIOU-KLEITSAKI

NOTARY

SK. SOUTSOU, No. 6 – LARISA

TEL. (Illegible text)

T.I.N. (Illegible text) – FIRST FISCAL

SERVICE

16:KARNANIAS S.A.

NUMBER 21.180

ESTABLISHMENT OF A SOCIETE ANONYME THROUGH THE

CONVERSION

OF A LIMITED LIABILITY COMPANY (LTD)

BY VIRTUE OF ARTICLES 1-5 OF THE L.2166/1993

SHARE CAPITAL 200.000.000 DRACHMAS or

586.940,57 EUROS

In Larisa, this ten tenth (10th) day of April of the year two thousand and one (2001), day Tuesday, and at my Office, owned by Fotios Romousios, located at Skarlatou Soutsou street, no. 6, before me, Notary Public of Larisa ELENI - EVGENIA ROMOSIOU - KLEITSAKI, resident of Larisa, where my headquarters are located, appeared the following persons known to me and not exempted by the law 1) Apostolos Karnanias, son of Georgios and Vasiliki, a chemist, born in Farsala and resident of Larisa, Farmaki street, no. 3, (identification card number Ξ.697569/1985 Police Department of Larisa) with TIN 021894692 Second Fiscal Service of Larisa and 2) Stamatia

"Intertranslations Ltd"
Intertranslations Translations Single Member
Limited Liability Company
Translation Services, Internet Services, Document Data Processing
4 El. Venizelou Street, Kallithea, Greece 17676
VAT No: EL095730868, Tax Office: A' KALL...A
Tel: +... 210 922 5000

GEORGIOS KARKANIAS
PRESIDENT

03/12/18

wife of Apostolos Karnanias, daughter of Christos and Eleni Tsolaki, Technical Engineer, born in Kallipefki of Tyrnavos and resident of Larisa, Farmaki street, no. 3, (identification card number Ξ.697568/1985 Police Department of Larisa) with TIN 063983574 of the Second Fiscal Service of Larisa and requested the drafting of the present document hereby stating the following: By virtue of the Statutes dated 28340/10-12-1986, drafted by the Notary Public of Larisa, Dimitrios Zagouras, son of Panayotis, filed with the companies records of the Court of First Instance of Larisa under number 91/19-12-1986 and published in Government Gazette number 3418/29-12-1986 (SAs and Ltds Issue), there appearing persons established a Limited Liability Company under the trade name "A.KARNANIAS LIMITED LIABILITY COMPANY" having its headquarters in the city of Larisa, with TIN 095244711 and share capital two hundred thousand (200.000) drachmas, divided into twenty (20) company shares, which were assumed by the associates, that is: Apostolos Karnanias assumed fifteen (15) company shares and Stamatia, wife of Apostolos Karnanias assumed five (5) company shares. Then, through the contract number 49.117/1994 drafted by the Notary Public of Larisa, Vasilios Nanos, which was registered with the companies records of the Court of First Instance of Larisa under serial

"Intertranslations Ltd"
Intertranslations Translations Single Member
Limited Liability Company
Translation Services, Internet Services, Document Data Processing
4 El. Venizelou Street, Kallithea, Greece 17676
VAT No: EL095730866, Tax Office: A' KALLITHEA
Tel: +30 210 922 5000

GEORGIOS KARKANIAS
PRESIDENT

03/12/18

number 104/22-12- 1989 and published in Government Gazette number 107/16-1-1990 the share capital was increased per six million eight hundred thousand (6.800.000), that is the company's capital amounted to seven million (7.000.000) drachmas, divided to seven hundred (700) company shares of nominal value ten thousand (10.000) drachmas each and the participation of each associate were a) Apostolos Karkanias held a part of five hundred and twenty five (525) company shares of total value 5.250.000 drachmas and b) Stamatia wife of Apostolos Karkanias held a participation share consisting of one hundred and seventy five (175) company shares having a total value of 1.750.000 shares. Further on, through my contract number 11.868/1994, which was registered with the company records of the Court of First Instance of Larisa under serial number 5/5-1-1995 and published in Government Gazette 4123/1998 the capital share was increased per nine million (9.000.000) drachmas, thus the company's capital reached the amount of sixteen million (16.000.000) drachmas, divided into one thousand and six hundred (1.600) company shares of nominal value ten thousand (10.000) drachmas each, while the participation of each party was a) Apostolos Karkanias participated with one thousand two hundred (1.200) company shares of total value twelve million

"Intertranslations Ltd"
Intertranslations Translations Single Member
Limited Liability Company
Translation Services, Internet Services, Document Data Processing
4 El. Venizelou Street, Kallithea, Greece 17676
VAT No: EL095730866, Tax Office: A' KALLITHEA
Tel: +30 210 922 5000

GEORGIOS KARKANIAS
PRESIDENT

03/12/18

(12.000.000) drachmas and b) Stamatia, wife of Apostolos Karkanias Participated with four hundred (400) company shares having a total value of four million (4.000.000) drachmas. Further one, through my contract number 12.981/1995, which was registered with the company records of the Court of First Instance of Larisa under serial number 80/31-8-1995 and published in Government Gazette number 5690/4-10-1995 A) there was amendment of the statutes, and particularly articles one (1), two (2), three (3), eighteen (18) and nineteen (19), so as to add to the company's trade name the distinctive title "KARKANIAS", while the company's headquarters were defined to be in the Industrial Area of the City of Larisa (Ind. A. of Larisa) and B) the capital share was increased per thirty four million (34.000.000) drachmas, that is the company's capital reached the amount of fifty million (50.000.000) drachmas, divided into five thousand (5.000) company shares of nominal value of ten thousand (10.000) drachmas each, while the participation of each party was formulated as follows a) Apostolos Karkanias Participated with three thousand seven hundred and fifty (3.750) company shares having a total value of thirty seven million five hundred thousand (37.500.000) drachmas and b) Stamatia, wife of

"Intertranslations Ltd"
Intertranslations Translations Single Member
Limited Liability Company
Translation Services, Internet Services, Document Data Processing
4 El. Venizelou Street, Kallithea, Greece 17676
VAT No: EL095730866, Tax Office: A' KALLITHEA
Tel: +30 210 922 5000

GEORGIOS KARKANIAS
PRESIDENT

03/12/18

Apostolos Karkanias participated with one thousand two hundred and fifty (1.250) company shares having a total value of twelve million five hundred thousand (12.500.000) drachmas.

Further on, through my notary deed number 17.105/6-4-1998 which was registered with the company records of the Court of First Instance of Larisa under serial number 37/7-4-1998 and published in Government Gazette number 1887/10-4-1998 (SAs and Ltds Issue), the capital of the above company was increased per one hundred and fifty million (150.000.000) drachmas, divided into fifteen thousand (15.000) company shares, of nominal value 10.000 drachmas each. The said amount was derived from cash held by the parties themselves, and thus the company's capital currently amounts to two hundred million (200.000.000) drachmas, divided into twenty thousand (20.000) company shares having a value of ten thousand (10.000) drachmas each, while the parties participate into the company as follows: 1) Apostolos Karkanias participates with fifteen thousand (15.000) company shares, having a total value of one hundred and fifty million (150.000.000) drachmas and 2) Stamatia, wife of Apostolos Karkanias participates with five thousand (5.000) company shares having a total value of fifty million (50.000.000) drachmas.

Through a decision of the Extraordinary General Assembly of the shareholders of the company named above

"Intertranslations Ltd"
Intertranslations Translations Single Member
Limited Liability Company
Translation Services, Internet Services, Document Data Processing
4 El. Venizelou Street, Kallithea, Greece 17676
VAT No: EL095730866, Tax Office: A' KALLITHEA
Tel: +30 210 922 5000

GEORGIOS KARKANIAS
PRESIDENT

03/12/18

it was decided unanimously to convert the company to a societe anonyme, on the basis of the C.L. 2190/1920 "concerning societes anonymes" in conjunction with the provisions of the L. 2166/1993. The minutes of the said company referenced above and numbered 198/12-2-2001 is attached hereto as follows:

MINUTES No 198

Of the Extraordinary General Assembly of the shareholders of the company A. KARNANIAS LTD.

In Larisa this the 12th day of February of the year 2001, day Monday, at the offices of company A. KARNANIAS LTD situated at the industrial area of Larisa, the shareholders of the said company held an extraordinary Assembly.

The assembly was attended by the following shareholders:

1.-Apostolos G. KARKANIAS, holder of 75% of the share capital.

2.-STAMATIA, WIFE OF APOST. KARKANIAS, holder of 25% of the share capital.

Following verification of the quorum, given that all shareholders representing the totality of the Share Capital attended the session, the Assembly is deemed summoned in accordance with the law and commences the discussion of the Topics of the Agenda.

"Intertranslations Ltd"
Intertranslations Translations Single Member
Limited Liability Company
Translation Services, Internet Services, Document Data Processing
4 El. Venizelou Street, Kallithea, Greece 17676
VAT No: EL095730866, Tax Office: A' KALLITHEA
Tel: +30 210 922 5000

GEORGIOS KARKANIAS
PRESIDENT

03/12/18

TOPICS OF THE AGENDA

TOPIC: Conversion of the company to a Societe Anonyme, in accordance with the provisions of the L.2166/1993.

The Chairman of the Assembly and manager of the company, Mr. Apostolos Karkanias, took the seat and recommended the conversion of the limited liability company to a societe anonyme in accordance with the abilities provided by the provisions of L. 2166/19 93, as currently in effect. This conversion is deemed favorable to the development and expansion of the company's businesses and its satisfactory course in the future.

The attending shareholders held exhaustive discussions, during which there was analysis of all issues, formalities provisioned by articles 1-5 of the L.2166/1993 concerning the conversion of the company to a Societe Anonyme, including the analysis of the legal framework of L.2190/1920 which shall govern the company followings its conversion, as well as the perspectives and advantages for the company in the future emanating from such conversion to a Societe Anonyme. Following the above, the extraordinary General Assembly of the shareholders decided unanimously to convert the LTD to a Societe Anonyme, in accordance with the provisions of the L.2166/1993, as currently in effect. The conversion shall be performed on the basis of the Balance Sheet dated

"Intertranslations Ltd"
Intertranslations Translations Single Member
Limited Liability Company
Translation Services, Internet Services, Document Data Processing
4 El. Venizelou Street, Kallithea, Greece 17676
VAT No: EL095730865, Tax Office: A' KALLITHEA
Tel: +30 210 922 5000

GEORGIOS KARKANIAS
PRESIDENT

03/12/18

31-12-2000 which shall also constitute the Conversion Statement of Accounts. For the purposes of the conversion, the company's manager Mr. Apostolos Karkanias was authorized to appoint a chartered Auditor Accountant in order to proceed with the audit of the Conversion statement of accounts dated 31-12-2000 and the issuance of the respective certificate, in accordance with L.2166/1993.

Given that there were no other topics for discussion and following signature of the present minute in the Books of Minutes of the General Assembly by each shareholder, the General Assembly of the shareholders was declared adjourned

The shareholders

A. G. Karkanias S.A. Karkania

Larisa 12-02-2001

The Manager

Apostolos G. Karkanias

////////////////

Then, the above shareholders assigned, in accordance with the provisions of articles 1-5 of the L.2166/1993 the audit of the accounts of the Conversion Statement of Accounts dated 31-12-2000 to the Chartered Auditor Accountant Christos G. Chiras, who also drafted the audit report dated 12-3-2001 attached hereto.

"Intertranslations Ltd"
Intertranslations Translations Single Member
Limited Liability Company
Translation Services, Internet Services, Document Data Processing
4 El. Venizelou Street, Kallithea, Greece 17676
VAT No: EL095730866, Tax Office: A' KALLITHEA
Tel: +30 210 922 5000

GEORGIOS KARKANIAS
PRESIDENT

03/12/18

The statutes of the company established by virtue of the conversion is as follows:

CHAPTER ONE

FOUNDATION - TRADE NAME - HEADQUARTERS - SCOPE-DURATION

Article 1

Foundation - Trade name

Hereby there is establishment of a societe anonyme under the trade name "KARKANIAS - ENVIRONMENTAL TECHNOLOGIES SOCIETE ANONYME" with the distinctive title "KARKANIAS". For the company's transactions abroad, the trade name shall be the accurate translation of the above.

Article 2

Headquarters

The company's headquarters shall be situated at the Industrial Area of the city of Larisa (Ind.A. of Larisa) where the offices and facilities of the company are situated in premises and on a plot of its own property.

The company has the ability to establish branches, agencies, stores, or other offices in any city in Greece or abroad. The formalities of such establishment, foundation and operation shall be determined by the Board of Directors.

Article 3

Scope

The scope of the company is: 1) The design, construction, installation of liquid and solid waste cleaning and treatment systems and machinery

"Intertranslations Ltd"
Intertranslations Translations Single Member
Limited Liability Company
Translation Services, Internet Services, Document Data Processing
4 El. Venizelou Street, Kallithea, Greece 17676
VAT No: EL095730866, Tax Office: A' KALLITHEA
Tel: +30 210 922 5000

GEORGIOS KARKANIAS
PRESIDENT

03/12/18

as well as of water treatment systems, 2) The trade of such systems as well as the import and export thereof. 3) The contracting and performance of all types of technical works and environmental protection works in general, for any construction authority, i.e. public, Municipal, Communal and Private authorities both in Greece and abroad. 4) Trading of all types industrial products both domestic or imported from abroad. 5) The representation of domestic or foreign trading firms and industries, 6) All types of investments, 7) The creation, purchase, lease or rent, exploitation of tourism companies of all types, 8) The purchase of plots, the construction of buildings on them and the sale of flat properties, 9) The construction of multi-storey buildings as per the considerations system, 10) The performance of reconfiguration and restoration works for sites and buildings 11) The performance of solid waste (refuge) works, Sanitary Burial Areas works, recycling units, compost units, power exploitation, atmospheric pollution and toxic waste treatment, high tech systems (remote command), production and co-production of power-thermal energy,

"Intertranslations Ltd"
Intertranslations Translations Single Member
Limited Liability Company
Translation Services, Internet Services, Document Data Processing
4 El. Venizelou Street, Kallithea, Greece 17676
VAT No: EL095730866, Tax Office: A' KALLITHEA
Tel: +30 210 922 5000

GEORGIOS KARKANIAS
PRESIDENT

03/12/18

renewable energy sources, management-financing of public utility works (Public sector.

Article 4

Duration

The duration of the company is set to fifty (50) years commencing upon registration with the Societes Anonymes' Register by the competent authority of the related administrative decision concerning the establishment of the company and the approval of its Statutes. The company's term expires on the respective date of the year 2051. Upon decision of the General Assembly of the shareholders and through amendment of the present article, it is possible to extend or reduce the company's duration.

CHAPTER TWO

ARTICLE 5

Share capital - Shares

1.- The share capital of the company is determined at two hundred million (200.000.000) drachmas or 586.940,57 Euros, and it is paid in full

as per the detailed provisions of article 35 and it is divided into two hundred thousand (200.000) shares of nominal value one thousand (1.000) drachmas or 2.93 Euros each.

2.- Under the reservation of par. 4 to this section.

"Intertranslations Ltd"
Intertranslations Translations Single Member
Limited Liability Company
Translation Services, Internet Services, Document Data Processing
4 El. Venizelou Street, Kallithea, Greece 17676
VAT No: EL066730383, Tax Office: A' KALLITHEA
Tel: +30 210 922 5000

GEORGIOS KARKANIAS
PRESIDENT

03/12/18

During the first five-year period as of the foundation of the company, the board of directors has the right, following decision issued by a minimum majority of two thirds (2/3) of the entirety of its members: aa) to increase the share capital, in total or in part, through the issuance of new shares; such increase shall not exceed the initial share capital

ab) to issue a bond loan through the issuance of securities convertible to shares, for an amount that shall not exceed half the paid share capital. In this case there shall be application of the provisions of paragraphs 2 and 3 of article 3a of C.L. 2190/20 as in effect.

b) The above authorities may be assigned to the board of directors through a decision of the General Assembly subject to the publication formalities provisioned by article 7b of C.L. 2190/20 as in effect. In this case, the share capital may be increased up to the capital amount already paid on the date the board of directors was provided with such authority, while the amount of the bond loan shall not exceed half the paid share capital on the same date.

"Intertranslations Ltd"
Intertranslations Translations Single Member
Limited Liability Company
Translation Services, Internet Services, Document Data Processing
4 El. Venizelou Street, Kallithea, Greece 17676
VAT No: EL095730866, Tax Office: A' KALLITHEA
Tel: +30 210 922 5000

GEORGIOS KARKANIAS
PRESIDENT

03/12/18

c) The above authorities of the board of directors may be renewed by the general assembly for a time period not exceeding five years, for each renewal and with their validity commencing following expiration of such five-year period. This decision of the general assembly is subject to the publication formalities provisioned by article 7b of C.L. 2190/20.

3.- Under the reservation of par. 4 of this article, the General Assembly within the first five year period since foundation of the company, has the right through a decision - requiring the majority and quorum stipulated by ARTICLE 14 herein- to increase the share capital, in total or in part, through the issuance of shares up to five times the initially paid share capital.

4.- If the company reserves exceed a quarter (1/4) of the paid share capital, then a decision of the General assembly under the quorum and majority stipulated in article 15 herein is always required, followed by an amendment of the related article.

5.- Any capital increase decided as per par. 2 and 3 of this article shall not constitute an amendment to the Statutes.

"Intertranslations Ltd"
Intertranslations Translations Single Member Limited Liability Company
Translation Services, Internet Services, Document Data Processing
4 El. Venizelou Street, Kallithea, Greece 17676
VAT No: EL095730366, Tax Office: A' KALLITHEA
Tel: +30 210 922 5000

GEORGIOS KARKANIAS
PRESIDENT

03/12/18

6.- The authority of the BoD to increase share capital as per par. 2 of this article may be exercised concurrently to the authority of the General Assembly as per par. 3 herein.

Article 6

1.-The company shares are registered and reserved and shall only be transferred as defined below, with the concurrent opinion of the Board of Directors, while they shall be signed by the Chairman of the Board of Directors and a member appointed by the latter and shall further have the ability to be converted to common stocks and vice versa, through a decision of the General Assembly in accordance with article 14 herein and amendment of the present article.

In the event that any of the shareholders wishes to transfer part or the totality of the shares owned, if permitted by the law, then such shareholder is responsible to address primarily to the other shareholders and, if and only if no one of them is interested to purchase them, the shareholder shall have the right to transfer them to a third party. The transfer price of each share, in case of dispute between the transferor and the transferee shareholder, shall be determined by the President of the Court of First Instance of Larisa, as per the injunction proceedings and such decision shall not be subject to any appeal.

"Intertranslations Ltd"
Intertranslations Translations Single Member
Limited Liability Company
Translation Services, Internet Services, Document Data Processing
4 El. Venizelou Street, Kallithea, Greece 17676
VAT No: EL095730868, Tax Office: A' KALLITHEA
Tel: +30 210 922 5000

GEORGIOS KARKANIAS
PRESIDENT

03/12/18

2.- Company shares are indivisible and a sole owner is acknowledged for each one of them. All joint co-owners of a share or title, and any person acquiring rights into them and persons holding bare ownership or usufruct shall be represented in the company, in their totality, by a single person. The proxy shall be appointed by any legal means.

3.- Each share provides the right of one vote at the General Assembly and rights to participate to the company's profits and assets as per the ratio of the number of shares issued and the product of the liquidation of company assets in case of resolution, and the distribution of the eventual profit.

4.-Share titles may represent one or more shares. The issues related to the issuance of shares are attended by the Board of Directors while it is further possible to issue provisional titles.

"Intertranslations Ltd"
Intertranslations Translations Single Member
Limited Liability Company
Translation Services, Internet Services, Document Data Processing
4 El. Venizelou Street, Kallithea, Greece 17676
VAT No: EL095730866, Tax Office: A' KALLITHEA
Tel: +30 210 922 5000

GEORGIOS KARKANIAS
PRESIDENT

03/12/18

CHAPTER THREE

SHAREHOLDERS

ARTICLE 7

Share rights

1.- The shareholders exercise their rights related to company management, solely through their participation at the General Assembly.

2.- Each share provides the right of one vote at the General Assembly.

3.- The decision of the competent body of the company to increase the share capital, or to issue a bond loan must state at least the amount of capital increase, or the amount of the loan, the method of coverage of such amounts, the number and kind of shares or bonds to be issued, their nominal value and the disposition value thereof. In any case of Share capital increase, not performed through contribution in kind, and issuance of bonds convertible to shares for the entirety of the new capital and bond loan, there shall be provision of option right to the shareholders of the company at such time, in accordance with their participation to the capital. After the lapse of the deadline for the performance of option rights, defined by the company body deciding the capital increase - such period being not less than a month - the shares not assumed by the existing shareholders shall be freely availed by the Board of Directors.

"Intertranslations Ltd"
Intertranslations Translations Single Member
Limited Liability Company
Translation Services, Internet Services, Document Data Processing
4 El. Venizelou Street, Kallithea, Greece 17676
VAT No: EL095730866, Tax Office: A' KALLITHEA
Tel: +30 210 922 5000

GEORGIOS KARKANIAS
PRESIDENT

03/12/18

In the event that the corporate body that decided the share capital increase, omitted to set a deadline for the expansion thereof, this shall be defined by the Board of Directors within the Deadline provisioned by article 11 of C.L.2190/20. The invitation to exercise the option right, which must also reference the deadline in which

such right is to be exercised, shall be published in the Government Gazette (SAs -Ltds Issue). The above invitation and deadline for the exercise of the option right may be omitted, as long as the General Assembly was attended by shareholders representing the entirety of the share capital and they were informed on the deadline set for the exercise of the option right, or stated their decision to exercise, or not such option right. Moreover, the publication of the invitation may be substituted by a registered letter, with return receipt, as long as the shares are registered in their entirety.

4.- Under the limitations of par. 6 and 7 of article 13 of C.L. 2190/1920 as in effect, the General Assembly may issue a decision in accordance with the provisions of articles 29 par. 3 and 4 and 31 par. 2 of C.L. 2190/20 as in effect, in order to limit or void the above option right.

"Intertranslations Ltd"
Intertranslations Translations Single Member
Limited Liability Company
Translation Services, Internet Services, Document Data Processing
4 El. Venizelou Street, Kallithea, Greece 17676
VAT No: EL095730866, Tax Office: A' KALLITHEA
Tel: +30 210 922 5000

GEORGIOS KARKANIAS
PRESIDENT

03/12/18

5.- In general, the method of coverage and payment of the share capital increase, as well as the method, the time of issuance of new shares and their number, value and type shall be determined by the company body which decides such increase and which is thus entitled to decide the total or partial coverage of the capital issued as an increase, also by means of contribution in kind following assessment by the committee defined in article 9 of the C.L. 2190/1920.

6.- a) Within the first month since the foundation of the societe anonyme, the Board of Directors is responsible to summon a special assembly having as the sole topic of the agenda the verification of the payment or non-payment of the initial share capital defined in the statute.

b) In any case of share capital increase, the above payment or non-payment verification by the Board of Director must be performed within a deadline of one (1) month as of the deadline set for the payment of the increase amount.

"Intertranslations Ltd"
Intertranslations Translations Single Member
Limited Liability Company
Translation Services, Internet Services, Document Data Processing
4 El. Venizelou Street, Kallithea, Greece 17676
VAT No: EL095730866, Tax Office: A' KALLITHEA
Tel: +30 210 922 5000

GEORGIOS KARKANIAS
PRESIDENT

03/12/18

c) The deadline for the payment of the capital increase shall not be less than one (1) month, or greater than four (4) months as of the date of issuance of the relevant decision by the competent company body, d) In case that share capital increase is followed by a respective amendment of the article of the statute concerning the capital, then the deadline for the payment of the capital increase commences on the date of issuance of the relevant decision by the General Assembly of the shareholders, and may be extended by the Board of Directors for an additional period of one (1) month.

e) Within twenty (20) days as of the expiration of the deadline stipulated in paragraphs 6a and 6b of this article, the company is responsible to submit to the Ministry of Commerce a copy of the relevant minutes of the assembly of the Board of Directors. In the event that such deadline lapses idle, in case of payment of initial capital there shall be application of the provisions of article 48 par. 1 point a of C.L. 2190/1920 and in case of capital increase there shall be revocation of the related decision approving the amendment of the statutes,

f) The payment in cash for the coverage of the initial share capital, or any eventual increases thereof, as well as the deposit of shares with the scope of future share capital increase, shall be performed necessarily through the deposit in an account registered to the company's name, kept with any Bank legally operating in Greece.

"Intertranslations Ltd"
Intertranslations Translations Single Member
Limited Liability Company
Translation Services, Internet Services, Document Data Processing
4 El. Venizelou Street, Kallithea, Greece 17676
VAT No: EL095730866, Tax Office: A' KALLITHEA
Tel: +30 210 922 5000

GEORGIOS KARKANIAS
PRESIDENT

03/12/18

7.- Within twenty days as of the expiration of the above deadlines the Chairman of the Board of Directors is responsible to submit to the competent Fiscal Service a copy of the relevant minutes of the above assembly of the Board.

Article 8

Minority rights

1.- In any case of application filed by shareholders representing one twentieth (1/20) of the paid share capital, the Board of Directors is responsible to summon an extraordinary General Assembly of the shareholder, setting as its session date, a date which is not more than thirty (30) from the dater of service of such application to the Chairman of the Board of Directors. The application must clearly define the topics of the agenda.

"Intertranslations Ltd"
Intertranslations Translations Single Member
Limited Liability Company
Translation Services, Internet Services, Document Data Processing
4 El. Venizelou Street, Kallithea, Greece 17676
VAT No: EL095730866, Tax Office: A' KALLITHEA
Tel: +30 210 922 5000

GEORGIOS KARKANIAS
PRESIDENT

03/12/18

2.- In any case of application filed by shareholders representing one twentieth (1/20) of the paid share capital, the Chairman of the Assembly is responsible to postpone, once only, the issuance of decisions on all, or some of the topics of the regular or extraordinary General Assembly, and to appoint a date for the continuation of the session for the issuance of such decisions. Such new date shall be the one defined in the application of the shareholders, which, however, shall not be later than thirty (30) days since the adjournment date. The General Assembly following an adjournment shall be deemed a continuation of the previous session and shall not be subject to the shareholders invitation publication formalities, while it can be attended by new shareholders, always in compliance with the provisions of article 27 paragraph 2 and 28 of the Codified Law 2190/1920, as in effect.

3.- In case of application filed by shareholders representing one twentieth (1/20) of the paid share capital, which must be submitted to the company five (5) full days prior to the regular General Assembly, the Board of Directors is responsible:

a) To announce to the General Assembly the amounts paid by the company during the last two-year period to members of the Board of Directors, or to managers, or other company employees for any reason, as well as any other provision of the company to such persons, or any other agreement of the company established for any reason with the persons named above.

"Intertranslations Ltd"
Intertranslations Translations Single Member
Limited Liability Company
Translation Services, Internet Services, Document Data Processing
4 El. Venizelou Street, Kallithea, Greece 17676
VAT No: EL095730866, Tax Office: A' KALLITHEA
Tel: +30 210 922 5000

GEORGIOS KARKANIAS
PRESIDENT

03/12/18

b) To provide the information requested with regard to company affairs, to the extent that these are useful for the actual assessment of the topics of the agenda. The board of directors may deny provision of the requested information on reasonable grounds, stating the relevant justification in the minutes.

4.- In case of application filed by shareholders representing one third (1/3) of the paid share capital, submitted to the company within the deadline defined in the previous paragraph, and as long as such shareholders are not represented in the Board of Directors, the Board of Directors is responsible to provide to the representative of such shareholders, during the General Assembly, or prior to it, as per its discretion, information concerning the course of the company's affairs and the financial status of the company. The Board of Directors may deny provision of the requested information on reasonable grounds, stating the relevant justification in the minutes.

"Intertranslations Ltd"
Intertranslations Translations Single Member
Limited Liability Company
Translation Services, Internet Services, Document Data Processing
4 El. Venizelou Street, Kallithea, Greece 17676
VAT No: EL095730866, Tax Office: A' KALLITHEA
Tel: +30 210 922 5000

GEORGIOS KARKANIAS
PRESIDENT

03/12/18

5.- For the cases of the second point of par. 3 and par. 4 of this article, any questioning concerning the justification or non-justification of the denial to provide information shall be settled by the competed Uni-Member Court of First Instance of the region of the company's headquarters as per the injunction proceedings. Through the same decision, the Court may also oblige the company to provide the information denied.

6.- In case of application filed by shareholders representing one twentieth (1/20) of the paid share capital, the issuance of any decision concerning any topic on the agenda of the General Assembly shall be performed through open, nominal voting.

7.- The shareholders exercising the rights described in this article must have submitted, as per article 12 of this statute, the shares providing them with such rights and must keep them deposited from the date of submission of their application and : a) for the cases of par. 1 and 4 of this article up to the date of the session of the General Assembly, b) For the cases of par. 5 of this article up to the issuance of the decision by the competent Court.

"Intertranslations Ltd"
Intertranslations Translations Single Member
Limited Liability Company
Translation Services, Internet Services, Document Data Processing
4 El. Venizelou Street, Kallithea, Greece 17676
VAT No: EL095730866, Tax Office: A' KALLITHEA
Tel: +30 210 922 5000

GEORGIOS KARKANIAS
PRESIDENT

03/12/18

8.- The company shareholders representing one twentieth (1/20) of the paid share capital, have the right to request the audit of the company by the Uni-member Court of First Instance of the region in which the company is based, by means of voluntary jurisdiction proceedings. The audit is ordered if it is suspected that the actions accused violate the provisions of the law or of the company's Statute, of of the decisions of the General Assembly. The actions accused must have been performed at a time that does not exceed two years as of the year of approval of the annual

financial statements for the year in which such actions were performed.

9.- The company shareholders representing one third (1/3) of the paid share capital may request an audit by the aforementioned competent Court, if the entire course of company affairs leads to the assumption that the management of company affairs is not performed as per the prudent and wise management principles. This provision does not apply when the minority requesting the audit is represented at the Board of Directors of the company.

"Intertranslations Ltd"
Intertranslations Translations Single Member
Limited Liability Company
Translation Services, Internet Services, Document Data Processing
4 El. Venizelou Street, Kallithea, Greece 17676
VAT No: EL095730866, Tax Office: A' KALLITHEA
Tel: +30 210 922 5000

GEORGIOS KARKANIAS
PRESIDENT

03/12/18

10.- The shareholders exercising the right provisioned by par. 8 and 9 above must retain the shares providing them with such right, deposited at the Loans and Mortgages Fund or the Bank of Greece, or any other accredited Greek Bank, till the issuance of the decision and in any case for a time period not less than thirty (30) days as of the date of submission of the application.

CHAPTER FOUR

GENERAL ASSEMBLY

Article 9

Authority of the General Assembly

1.- The General Assembly of the company shareholders is the supreme body and has the power to decide on all company affairs. Its lawful decisions are also binding to the absent or objecting shareholders.

2.- The General Assembly is the sole body competent to decide on the following:

a) Extension of the duration, disruption, conversion, reorganization, merger or dissolution of the company.

b) Amendment of Statute.

c) Increase or decrease of Share capital, with the exception of the case of par. 2 and 3 of article 5 herein, concerning increases decided by the Board of Directors or the General Assembly, as well as increases rendered mandatory by the provisions of other Laws.

"Intertranslations Ltd"
Intertranslations Translations Single Member
Limited Liability Company
Translation Services, Internet Services, Document Data Processing
4 El. Venizelou Street, Kallithea, Greece 17676
VAT No: EL095730866, Tax Office: A' KALLITHEA
Tel: +30 210 922 5000

GEORGIOS KARKANIAS
PRESIDENT

03/12/18

d) Issuance of a bond loan, with the exception of the case of par. 6, article 5 herein.

e) Election of the members of the Board of Directors, with the exception of the cases defined in article 22 and 36 herein.

f) Selection of auditors.

g) Appointment of liquidators.

h) Profits allocation.

i) Approval of annual financial statements.

3.- The above par. 2 shall not include the absorption of the societe anonyme by another societe anonyme holding 100% of its shares, as per article 78 of C.L. 2190/20.

Article 10

Summoning of the General Assembly

1.- The General Assembly of the shareholders is summoned by the Board of Directors and sessions regularly at the company's headquarters, at least once a year, always within the first semester as of the expiration of its fiscal period and exceptionally at locations other than its headquarters, in accordance with the provisions of article 25 of C.L. 2190/20, as revised and in effect. The Board of Directors may summon an extraordinary General Assembly of the shareholders, when deemed expedient.

"Intertranslations Ltd"
Intertranslations Translations Single Member
Limited Liability Company
Translation Services, Internet Services, Document Data Processing
4 El. Venizelou Street, Kallithea, Greece 17676
VAT No: EL095730866, Tax Office: A' KALLITHEA
Tel: +30 210 922 5000

GEORGIOS KARKANIAS
PRESIDENT

03/12/18

2.- The General Assembly, with the exception of repetitive sessions and the sessions equivalent to those, must be summoned at least twenty (20) days prior to the date appointed for the session. It is clarified that non-working days are included in the above period.

The date of invitation to the General Assembly and the session date are not included in the calculation of the above period. 3.- Shareholders representing the entirety of the paid share capital may hold an extraordinary General Assembly at the company's headquarters at any time, without any invitation publication formalities and my discuss and decide on all company affairs, even if not included in the agenda, as long as no-one of the shareholders objects. In order for the decisions to be valid, the majority provisioned by the Law and the statute must be attained.

Article 11

Invitation - Agenda of the General Assembly

1.- The invitation to the shareholders for the General Assembly shall indicate clearly the premises where the assembly shall take place, the date and time, as well as the topics of the agenda. This invitation shall be

GEORGIOS KARKANIAS
PRESIDENT

"Intertranslations Ltd"
Intertranslations Translations Single Member
Limited Liability Company
Translation Services, Internet Services, Document Data Processing
4 El. Venizelou Street, Kallithea, Greece 17676
VAT No: EL095730866, Tax Office: A' KALLITHEA
Tel: +30 210 922 5000

03/12/18

published ten (10) days earlier in the Societes Anonymes and Limited Liability Companies Issue of the Government Gazette and twenty (20) days earlier in one of the daily political newspapers circulating in Athens, which as per the discretion of the Board of Directors has the broadest circulation in the country. This newspaper shall be selected among the newspapers stated in article 3 of the Law Decree 3757/1957 as in effect. Further, there shall also be publication in a daily financial newspaper selected among those defined as financial newspapers by a decision of the Minister of Development, while the invitation shall also be posted at a eminent location in the company premises. As an exception and if the company is based in a municipality, or community outside the prefecture of Attica, the invitation must be published in a daily, or at least weekly newspaper of those circulating in the area of the headquarters and, if no such newspaper exists, in a daily or at least weekly newspaper from those circulating at the capital of the Prefecture to which the company belongs as per L.2741/99. In case of repetitive general Assemblies and assemblies equivalent to those, the above deadlines are reduced to half.

"Intertranslations Ltd"
Intertranslations Translations Single Member
Limited Liability Company
Translation Services, Internet Services, Document Data Processing
4 El. Venizelou Street, Kallithea, Greece 17676
VAT No: EL095730866, Tax Office: A' KALLITHEA
Tel: +30 210 922 5000

GEORGIOS KARKANIAS
PRESIDENT

03/12/18

2.- The Board of Directors of the company is responsible to provide the annual financial statements and a copy of the Board of Directors report, including the auditors report based on these, ten (10) days prior to the regular General Assembly and to each shareholder requesting such information.

Article 12

Deposit of shares - Representation

1.- The shareholders that wish to participate to the General Assembly must deposit the titles of the shares at the company's fund or at the Loans and Mortgages Fund or any Bank in Greece, at least five (5) full days prior to the date on which the assembly is to take place.

2.- The shareholders that have the right to participate to the General Assembly can be represented at by an authorized person.

3.- The shares' deposit slips as well as the legalizing documents of shareholders representatives must be submitted to the company, at least five (5) full days prior to the General Assembly session.

4.- Any shareholders not in compliance with the provisions of par. 1 and 3 in this article may participate to the General Assembly only with the prior permission of the Assembly.

"Intertranslations Ltd"
Intertranslations Translations Single Member
Limited Liability Company
Translation Services, Internet Services, Document Data Processing
4 El. Venizelou Street, Kallithea, Greece 17676
VAT No: EL095730866, Tax Office: A' KALLITHEA
Tel: +30 210 922 5000

GEORGIOS KARKANIAS
PRESIDENT

03/12/18

Article 13

A list of the shareholders with voting rights, is posted at an eminent location in the company premises forty eight (48) hours prior to each General Assembly. This table must contain all data required by the law, such as reference of any representatives of the shareholders, number of shares and votes of each shareholders, as well as their addresses and the respective addresses of their representatives.

Article 14

Standard quorum and Majority of the General Assembly

1.- The General Assembly is deemed in quorum and sessions validly on the topics of the agenda when there is representation at it of at least 20% of the paid share capital.

2.- In case such a quorum is not attained during the first session, there is summoning of a repetitive session within twenty (20) days as of the date of the session postponed. The invitation to such repetitive session is addressed at least ten (10) days earlier. The repetitive session is deemed in quorum and sessions validly on the topics of the initial agenda, regardless of the part of the paid share capital represented at it. 3.- The decisions of the General Assembly are issued under the absolute majority of the votes represented at the assembly.

"Intertranslations Ltd"
Intertranslations Translations Single Member
Limited Liability Company
Translation Services, Internet Services, Document Data Processing
4 El. Venizelou Street, Kallithea, Greece 17676
VAT No: EL095730866, Tax Office: A' KALLITHEA
Tel: +30 210 922 5000

GEORGIOS KARKANIAS
PRESIDENT

03/12/18

Article 15

Exceptional quorum and majority of the

General Assembly

1.- As an exception the General Assembly is deemed in quorum and sessions validly on the topics of the agenda, if there is representation at it of two thirds (2/3) of the paid share capital, with regard to decisions related to the following:

a) extension of the duration, disruption, conversion, reorganization, merger, or dissolution of the company,

b) Change of the company's nationality,

c) Modification of the company's scope.

d) Increase or decrease of the share capital, with the exception of the increases stipulated in article 5 par. 2 and 3 herein and the increases imposed by other laws, or performed through the capitalization of reserves.

"Intertranslations Ltd"
Intertranslations Translations Single Member
Limited Liability Company
Translation Services, Internet Services, Document Data Processing
4 El. Venizelou Street, Kallithea, Greece 17676
VAT No: EL095730666, Tax Office: A' KALLITHEA
Tel: +30 210 922 5000

GEORGIOS KARKANIAS
PRESIDENT

03/12/18

e) Issuance of a bond loan, in accordance with article 13 par. 1 of C.L. 2190/20.

f) Modification of the profit allocation method,

g) Increase of shareholders' responsibilities and renewal of authority to the Board of Directors in order to proceed to share capital increase, or to the issuance of a bond loan.

h) in any other case provisioned by the law. 2.- If the quorum of the previous paragraph is not attained during the first session, then within twenty (20) days from such session and following a minimum of ten (10) days prior invitation there is gathering of the first repetitive session which is deemed in quorum and sessions validly on the topics of the initial agenda when there is representation at it of at least half (1/2) of the paid share capital.

3.- If this quorum also fails to be established, then within twenty (20) days there is again summoning of a repetitive session, following prior invitation at least ten (10) days earlier, which is deemed in quorum and sessions validly on the topics of the initial agenda when there is representation at it of at least one third (1/3) of the paid share capital.

"Intertranslations Ltd"
Intertranslations Translations Single Member
Limited Liability Company
Translation Services, Internet Services, Document Data Processing
4 El. Venizelou Street, Kallithea, Greece 17676
VAT No: EL095730866, Tax Office: A' KALLITHEA
Tel: +30 210 922 5000

GEORGIOS KARKANIAS
PRESIDENT

03/12/18

4.- All decisions of par. 1 of this article are issued under a majority of two thirds (2/3) of the votes represented at the assembly.

Article 16

President - Secretary of the General Assembly

1.- The General Assembly is temporarily presided by the Chairman of the Board of Directors, or in case of impediment by his substitute. The secretarial duties are performed by the person appointed by the President.

2.- Following approval of the list of shareholders with voting rights, the assembly proceeds to the election of its President and of a secretary who also performs the duties of a teller.

Article 17

Topics of discussion -Minutes of the General Assembly.

1.- The discussions and decisions of the General assembly are defined in the topics included in the agenda.

2.- The topics discussed and decided upon at the General Assembly are recorded in minutes which are then signed by the President and the Secretary.

3.- Copies and excerpts of the minutes are validated by the Chairman of the Board of Directors or his substitute.

"Intertranslations Ltd"
Intertranslations Translations Single Member
Limited Liability Company
Translation Services, Internet Services, Document Data Processing
4 El. Venizelou Street, Kallithea, Greece 17676
VAT No: EL095730366, Tax Office: A' KALLITHEA
Tel: +30 210 922 5000

GEORGIOS KARKANIAS
PRESIDENT

03/12/18

4.- The company is obliged to provide its shareholders with copies of the general assembly minutes. The shareholders to which the company denies to provide copies of the general assembly minutes, may appeal to the competent administrative authority, where the company's records are kept, and the latter is responsible to provide them with such copies.

Article 18

Decision to relieve the members of the Board of

Directors and the Auditors

Following approval of the financial statements, the General Assembly, through a special voting process which is open and nominative decides to relieve the members of the Board of Directors and the auditors from any remuneration responsibilities. The members of the Board of Directors and the company's employees vote solely through their shares. The Board of Directors relief is not valid under the provisions of article 22 a of C.L. 2190/1920.

CHAPTER FIVE

BOARD OF DIRECTORS

Article 19

Composition - Term of the Board of Directors.

"Intertranslations Ltd"
Intertranslations Translations Single Member
Limited Liability Company
Translation Services, Internet Services, Document Data Processing
4 El. Venizelou Street, Kallithea, Greece 17676
VAT No: EL095730866, Tax Office: A' KALLITHEA
Tel: +30 210 922 5000

GEORGIOS KARKANIAS
PRESIDENT

03/12/18

1.- The company is managed by the Board of Directors which consists of three (3) to seven (7) members.

2.- The members of the Board of Directors are elected by the General Assembly of the shareholders of the company for a five-year term, which is extended automatically till the first regular General Assembly following the expiration of their term, such period however not exceeding a total of six years.

3.- The members of the Board of Directors can be re-elected.

Article 20

Power - Authority of the Board of Directors

1.- The Board of Directors holds the management (administration and allocation) of the company assets, as well as the company's representation. It decides in general on all issues concerning the company, in the framework of the corporate scope, with the exception of the issues which, in accordance with the law, or the present statute are subject to the exclusive authority of the General Assembly.

2.- The company, under the reservation of the following paragraph, assumes responsibilities and is bound by the signature of an authorized member of the Board of Directors, affixed under the corporate name.

"Intertranslations Ltd"
Intertranslations Translations Single Member
Limited Liability Company
Translation Services, Internet Services, Document Data Processing
4 El. Venizelou Street, Kallithea, Greece 17676
VAT No: EL095730856, Tax Office: A' KALLITHEA
Tel: +30 210 922 5000

GEORGIOS KARKANIAS
PRESIDENT

03/12/18

3.- The Board of Directors has the authority to assign, strictly in writing, the performance of all of its powers and authorities (with the exception of those requiring collective action), as well as company representation to one or more persons, whether members of the Board or not, defining at the same time the extent of such assignment. The authorities of the Board of Directors are subject to the provisions of articles 10, 22 and 23 a of C.L. 2190/1920.

Article 21

Formulation of the Board of Directors

1.- The Board of Directors, immediately after its election gathers and assembles into a body electing its President and Vice President.

2.- The Board of Directors may elect one or two Managing Directors strictly among its members, defining at the same time their authorities.

3.- The President of the Board of Directors presides over the assemblies. In case of absence or impediment, the president is substituted for the entirety of its authorities by the Vice President and the latter, in case of impediment is substituted by the Managing Director following decision of the Board of Directors.

"Intertranslations Ltd"
Intertranslations Translations Single Member
Limited Liability Company
Translation Services, Internet Services, Document Data Processing
4 El. Venizelou Street, Kallithea, Greece 17676
VAT No: EL095730866, Tax Office: A' KALLITHEA
Tel: +30 210 922 5000

GEORGIOS KARRANIAS
PRESIDENT

03/12/18

Article 22

Substitution of a member of the Board of Directors

If for any reason, the position of the member of the Board is found vacant, the remaining members are required, as long as they satisfy the legal quorum requirements, to elect a temporary substitute for the rest of the term of the member being substituted.

Such election is submitted for approval to the directly next regular or extraordinary General Assembly. The actions of the member elected as per the above are deemed valid, even if such election is not approved by the General Assembly.

Article 23

Summons of the Board of Directors

1.- The Board of Directors sessions at the seat of the company at least once per month.

It is summoned at any time by its President, or upon request of two of its members.

2.- The Board of Directors sessions validly at a location other than its headquarters, whether in Greece, or abroad, as long as the meeting is attended by or there is representation of all members and none of them objects to the performance of the session and the issuance of decisions.

"Intertranslations Ltd"
Intertranslations Translations Single Member
Limited Liability Company
Translation Services, Internet Services, Document Data Processing
4 El. Venizelou Street, Kallithea, Greece 17676
VAT No: EL095730866, Tax Office: A' KALLITHEA
Tel: +30 210 922 5000

GEORGIOS KARKANIAS
PRESIDENT

03/12/18

3.- The Board of Directors is summoned by its President through an invitation addressed to the members at least two (2) business days prior to the session. The invitation must necessarily state clearly the topics of the agenda, otherwise decision making is only allowed when there is attendance or representation of all members of the Board of Directors and none of them objects to the issuance of decisions.

4.- The Board of Directors assembly may be requested by two (2) of its members through an application to the President, who is responsible to summon the Board within a deadline of ten (10) days since application submission. In case the President denies summoning the Board of Directors within the above deadline, or in case of delayed summoning, the members that requested such summoning have the right to summon the Board of Directors themselves within a deadline of five (5) days as of the date of expiration of the above ten-day period, notifying the relevant invitation to the other members of the Board of Directors. The above invitation, under unacceptability clause, must state clearly the topics to be discussed by the Board of Directors.

"Intertranslations Ltd"
Intertranslations Translations Single Member
Limited Liability Company
Translation Services, Internet Services, Document Data Processing
4 El. Venizelou Street, Kallithea, Greece 17676
VAT No: EL095730866, Tax Office: A' KALLITHEA
Tel: +30 210 922 5000

GEORGIOS KARKANIAS
PRESIDENT

03/12/18

Article 24

Members' representation - Quorum - Majority

1.- An absent member may be represented by another member. Each member may represent only one absent member. A member that is continuously absent without sound reason and for more than six (6) regular assemblies of the Board of Directors is substituted following decision of the Board of Directors in accordance with the terms of this article.

2.- The Board of Directors is in quorum and sessions validly when it is attended by, or when there is representation at it of half plus one members, this number however never being less than three (3). In order to establish the quorum number, any fractions are omitted.

3.- The decisions of the Board of Directors are issued as per the absolute majority of the members attending or being represented at it, with the exception of the case of paragraph 2, article 5 herein. In case of equivocation the vote of the President of the BoD shall not prevail.

"Intertranslations Ltd"
Intertranslations Translations Single Member
Limited Liability Company
Translation Services, Internet Services, Document Data Processing
4 St. Verdzelou Street, Kallithea, Greece 17676
VAT No: EL095730866, Tax Office: A' KALLITHEA
Tel: +30 210 922 5000

GEORGIOS KARKANIAS
PRESIDENT

03/12/18

Article 25

Minutes of the Board of Directors

1.- The discussions and decisions of the Board of Directors are recorded in minutes which are signed and ratified by the President or the Vice President.

3.-Copies of the meeting minutes of the

Board of Directors for which there is requirement to be registered with the societes anonymes register, in accordance with article 7 a of the Codified Law 2190/1920,

are submitted to the Chamber of Commerce within a deadline of twenty (20) days from the meeting of the Board of Directors.

Article 26

Remuneration of the members of the Board of Directors

1.- The members of the Board of Directors may receive a remuneration the amount of which is determined by a special decision of the regular General Assembly.

2.- Any other fee or remuneration to the members of the Board of Directors shall be borne by the company, if approved by a special decision of the regular General Assembly.

"Interlanguages Ltd"
Interlanguages Translations Single Member
Limited Liability Company
Translation Services, Internet Services, Document Data Processing
4 El. Venizelou Street, Kallithea, Greece 17676
VAT No: EL095730866, Tax Office: A' KALLITHEA
Tel: +30 210 922 5000

GEORGIOS KARKANIAS
PRESIDENT

03/12/18

3.- Any provision of credit (loan, guarantees, etc.) provided by the company to members of the Board of Directors, founders, General Managers, Directors and their spouses, or other relatives up to the third degree of kinship or affinity is absolutely forbidden and is considered void. Moreover, loans of the company issued to third parties, including the provision of credit to them in any way, or the provision of guarantees for them in order for them to acquire shares of the company are absolutely forbidden and void. For any other agreement between the company and these persons, it is necessary to issue a prior special permission of the General

Assembly. This also applies to labor contracts or work orders and any amendments thereof.

Article 27

NO COMPETITION CLAUSE

1.- The members of the Board of Directors as well as the company managers are not allowed to act, professionally, without permission by the General Assembly, for their own account, or on behalf of third parties and to perform actions subject to any of the objectives pursued by the company, or to participate as general partners to companies pursuing such objectives.

"Intertranslations Ltd"
Intertranslations Translations Single Member
Limited Liability Company
Translation Services, Internet Services, Document Data Processing
4 El. Venizelou Street, Kallithea, Greece 17676
VAT No: EL095730858, Tax Office: A' KALLITHEA
Tel: +30 210 922 5000

GEORGIOS KARKANIAS
PRESIDENT

03/12/18

2.- In case of violation of the above provision, the company has the right to claim remuneration in accordance with article 23 par. 2, 3 of C.L. 2190/1920.

CHAPTER SIX

AUDITS

Article 28

1.-The regular General Assembly elects in an annual basis, two (2) regular and two (2) substitute auditors, holders of University Degrees and licensed in Financing by the Greek Chambers of Finance, in accordance with the provisions of article 2 Presidential Decree 475/91 (Government Gazette176 A). These persons shall not be able to be re-appointed for more than five fiscal periods, while the General Assembly shall also define their fee.

2.- The assembly may elect a single regular and a single substitute auditor, as long as they are chartered auditors. In any case, as long as the limitations of par. 6, article 42 a of the C.L. 2190/1920 as in effect are exceeded, the election of the Chartered Auditors is mandatory, in accordance with the relevant provisions of the legislation in effect at the time.

3.- Within five (5) days as of the date of the General Assembly appointing such auditors, the company must communicate to them their appointment and in case they do not reject such appointment within a deadline of five (5) days, they are deemed to have accepted such appointment and bear all responsibilities and obligations stipulated in article 37 of C.L. 2190/1920 up to and inclusive article 43 a par. 4 of the same Law.

GEORGIOS KARKANIAS
PRESIDENT

"Intertranslations Ltd"
Intertranslations Translations Single Member
Limited Liability Company
Translation Services, Internet Services, Document Data Processing
4 El. Venizelou Street, Kallithea, Greece 17676
VAT No: EL095730866, Tax Office: A' KALLITHEA
Tel: +30 210 922 5000

03/12/18

CHAPTER SEVEN

Article 29

Company period

The Company's period has a duration of twelve months, commencing on January 1st and expiring on December 31st each year. As an exception the first company period, in accordance with L.2166/1993 commences on the beginning of the current year (1-1-2001) and ends on December 31st, 2001.

Article 30

ANNUAL FINANCIAL STATEMENTS

1.- At the end of each company period, the Board of Directors prepares the annual financial statements and the management report, always in accordance with the law and thus in accordance with the provisions of articles 42a, 42b, 42c, 42d, 42e, 43, 43a, 43b par. 1, 111, 112 as revised and in effect, of the C.L. 2190/1920.

"Intertranslations Ltd"
Intertranslations Translations Single Member
Limited Liability Company
Translation Services, Internet Services, Document Data Processing
4 El. Venizelou Street, Kallithea, Greece 17676
VAT No: EL095730866, Tax Office: A' KALLITHEA
Tel: +30 210 922 5000

GEORGIOS KARKANIAS
PRESIDENT

03/12/18

The annual financial statements (balance sheet) are submitted for approval to the regular General Assembly and are followed by: a) An explanatory report of the Board of Directors stating all elements defined in article 43a and 3 point a and b of the C.L. 2190/1920, as amended by the Presidential Decree 409/86 and b) by the auditors' report. 2.- The balance sheet and the period statement of results, and the profit allocation table along with the relevant audit certificate, when the audit is performed by chartered auditors, are published twenty (20) days prior to the date of the Assembly, as per the provisions of the law and in the newspapers stated in article 43b par. 5 and 7b par. 1 point B of C.L. 2190/1920, as in effect.

3.- For the valid approval by the General Assembly, the annual financial statements must be audited by the company auditors and must be specifically certified by three different persons, namely:

a) the President of the Board of Directors.

b) the Vice President of the Board of Directors.

c) the Accountings Manager.

"Intertranslations Ltd"
intertranslations Translations Single Member
Limited Liability Company
Translation Services, Internet Services, Document Data Processing
4 El. Venizelou Street, Kallithea, Greece 17676
VAT No: EL095730866, Tax Office: A' KALLITHEA
Tel: +30 210 922 5000

GEORGIOS KARKANIAS
PRESIDENT

03/12/18

Article 31

Profits allocation

Under the reservation of the provisions of article 44 a of C.L. 2190/1920 added through article 37 of the Presidential Decree 409/1986 the allocation of the net profit of the company is performed as follows:

a) Initially there is allocation of the percentage required for the formation of the regular reserve, as provisioned by the law, that is at least one twentieth (1/20) of net profit is deducted towards this end. Known as it may be, in accordance with the law this deduction ceases to be mandatory when the reserve reaches an amount at least equal to one third (1/3) of the company's capital.

b) Then there is allocation of the percentage required for the payment of the first dividend, that is at least six per cent (6%) of the paid share capital and in accordance with article 4 5 of C.L. 2190/1920 in conjunction with the provisions of C.L. 148, 1967 of the Law Decree 34/1968 and L.876/1979.

c) The General assembly avails freely the remaining amount.

CHAPTER EIGHT

DISSOLUTION - LIQUIDATION

Article 32

Reasons for company termination

"Intertranslations Ltd"
Intertranslations Translations Single Member
Limited Liability Company
Translation Services, Internet Services, Document Data Processing
4 El. Venizelou Street, Kallithea, Greece 17676
VAT No: EL095730868, Tax Office: A' KALLITHEA
Tel: +30 210 922 5000

GEORGIOS KARKANIAS
PRESIDENT

03/12/18

1.- The company is terminated:

a) Upon lapse of its duration, unless there is prior decision of the General Assembly to extend its duration. b) through a decision of the General Assembly c) As soon as the company is declared bankrupt.

2.- The collection of all shares by a single person shall not constitute grounds for company dissolution.

3.- In case the total equity of the company, as defined in article 42c of C.L. 2190/1920, as amended by the Presidential Decree 409/1986 is reduced more than half the paid share capital, the Board of Directors is responsible to summon a General Assembly within a deadline of six (6) months as of the expiration of the period in order to decide whether to dissolve the company or to employ other measures.

Article 33

Liquidation

1.- With the exception of the case of bankruptcy, the company's dissolution is followed by liquidation. In the case of point a, par. 1 of article 32 herein, the Board of Directors shall assume the duties of the liquidator till the appointment of liquidators by the General Assembly. In the case of point b of the same paragraph above and of the same article, the General Assembly through the same decision also appoints the liquidators.

"Intertranslations Ltd"
Intertranslations Translations Single Member
Limited Liability Company
Translation Services, Internet Services, Document Data Processing
4 El. Venizelou Street, Kallithea, Greece 17676
VAT No: EL095730866, Tax Office: A' KALLITHEA
Tel: +30 210 922 5000

GEORGIOS KARKANIAS
PRESIDENT

03/12/18

The liquidators appointed by the General Assembly may be two to four in number, whether shareholders or not, and shall exercise all authorities of the Board of Directors related to the procedure and scope of the liquidation, as these may be limited by the General Assembly, through the decisions with which they liquidators are responsible to comply. The appointment of liquidator implies, ipso jure, the cessation of the authority of the members of the Board of Directors. 2.- The liquidators appointed by the General Assembly are responsible to draft and publish in the press and the societes anonymes and limited liability companies issue of the Government Gazette a balance sheet, a copy of which must be submitted to the Monitoring Authority of the competent Prefecture authority. Moreover, during the liquidation, they are responsible to prepare and publish in the press and the Government Gazette (SAs - Ltds Issue) a Balance sheet for the liquidation, in accordance with case m of article 7 a of C.L. 2190/1920 as added by article 7 of the Presidential Decree 409/1986. Moreover, the liquidators must conclude, without any delay the pending

company affairs, convert to cash the company assets, settle company debts and collect its receivables. Moreover, they can perform new acts, as long as these serve the liquidation and the company's interests. The liquidators may also sell the company's estate property, the corporate business in its entirety, or departments thereof, or single assets, however after the lapse of four (4) months from the company's dissolution, each shareholder or and creditor may request from the Uni-Member Court of First Instance at the region of the company's headquarters, which tries as per articles 739 and on of the Civil Proceedings Code, to determine the lowest selling price for estate, departments, parts, or the entirety of the company and such decision

GEORGIOS KARKANIAS
PRESIDENT

"Intertranslations Ltd"
Intertranslations Translations Single Member
Limited Liability Company
Translation Services, Internet Services, Document Data Processing
4 El. Venizelou Street, Kallithea, Greece 17676
VAT No: EL095730866, Tax Office: A' KALLITHEA
Tel: +30 210 922 5000

03/12/18

shall be binding to the liquidators and shall not be subject to regular or extraordinary means of appeal.

3.- The liquidators shall have the same obligation when the liquidation expires.

4.- During liquidation, the General Assembly retains all of its rights.

5.- The liquidation balance sheets

are approved by the Assembly of the Shareholders which also decides on the release of the liquidators from any responsibility.

"Intertranslations Ltd"
Intertranslations Translations Single Member
Limited Liability Company
Translation Services, Internet Services, Document Data Processing
4 El. Venizelou Street, Kallithea, Greece 17676
VAT No: EL095730866, Tax Office: A' KALLITHEA
Tel: +30 210 922 5000

GEORGIOS KARKANIAS
PRESIDENT

03/12/18

b.- Each year, the liquidations results are submitted to the General Assembly along with a report of the reasons that prevented the completion of the liquidation. The liquidation phase shall not exceed five years as of the date of its commencement, and at that time the company is deleted from the S.As' register. In order to continue liquidation beyond the five-year period, a special license of the Minister of Commerce is required. However, the liquidation phase shall in no case exceed ten years.

CHAPTER NINE

GENERAL PROVISION

Article 34

This statute is limited to the regulation of the items required by article 2 of the Codified L. 2190/1920. For all other issues, there shall be application of the regulations of C.L. 2190/1920, as in effect following amendment by the Presidential Decree 409/1986 and the Presidential Decree 498/1987 and 56/91 and L.2339/95, as in effect.

CHAPTER TEN

Transitional provisions

"Intertranslations Ltd"
Intertranslations Translations Single Member
Limited Liability Company
Translation Services, Internet Services, Document Data Processing
4 El. Venizelou Street, Kallithea, Greece 17676
VAT No: EL095730866, Tax Office: A' KALLITHEA
Tel: +30 210 922 5000

GEORGIOS KARKANIAS
PRESIDENT

03/12/18

Article 35

Capital coverage and payment -Share capital coverage

The share capital of article 5 herein arising from the societe anonyme established through conversion and amounting to two hundred million (200.000.000) drachmas, or 586.940,57 Euros, divided in two hundred thousand (200.000) shares of nominal value, one thousand (1.000) drachmas, or 2,93 Euros each, is covered through the contribution to the societe anonyme founded by means of conversion of the capital of the limited liability company with the trade name "A. KARKANIAS LIMITED LIABILITY COMPANY", the sole shareholders of which are the parties contracted herein, such amount being two hundred million (200.000.000) drachmas or 586.940,57 Euros. Participants to the said amount are a) Apostolos Karkanias, son of Georgios, who participates with fifteen thousand (5.000) company shares of total value, one hundred and fifty million (150.000.000) drachmas or 440.205,43 Euros, leading to a participation rate of 75% and b) Stamatia, wife of Apostolos Karkanias who participates with five thousand (5.000) company shares of total value fifty million (50.000.000) drachmas or 146.735,14 Euros.

"Intertranslations Ltd"
Intertranslations Translations Single Member
Limited Liability Company
Translation Services, Internet Services, Document Data Processing
4 El. Venizelou Street, Kallithea, Greece 17676
VAT No: EL095730866, Tax Office: A' KALLITHEA
Tel: +30 210 922 5000

GEORGIOS KARKANIAS
PRESIDENT
GEO... ...IAS
PRESIDENT

03/12/18

The partners contracted hereto of the limited liability company being converted, having the trade name "A. KARKANIAS LIMITED LIABILITY COMPANY" and founders of the societe anonyme arising from the conversion and having the trade name "KARKANIAS ENVIRONMENTAL TECHNOLOGIES SOCIETE ANONYME" assume the share capital of the said societe anonyme as follows:

A) Apostolos Karkanias son of Georgios, who participates to the converted limited liability company per seventy five per cent (75%) of the company capital, contributes to the societe anonyme founded through conversion the amount that corresponds to him, that is seventy five per cent (75%) of the company capital amounting to one hundred million (150.000.000) drachmas, or 440.205,43 Euros. Thus, the aforementioned, Apostolos Karkanias son of Georgios, covers the entire amount of one hundred and fifty million (150.000.000) drachmas or 440.205,43 Euros and shall receive one hundred and fifty thousand (150.000) shares of nominal value one thousand (1000) drachmas or 2,93 Euros each, and

"Intertranslations Ltd"
Intertranslations Translations Single Member
Limited Liability Company
Translation Services, Internet Services, Document Data Processing
4 El. Venizelou Street, Kallithea, Greece 17676
VAT No: EL095730866, Tax Office: A' KALLITHEA
Tel: +30 210 922 5000

GEORGIOS KARKANIAS
PRESIDENT

03/12/18

B) Stamatia, wife of Apostolos Karkanias, participating in the converted limited liability company per twenty five per cent (25%) of the company capital contributes to the societe anonyme founded through the conversion the amount that corresponds to her, that is twenty five per cent (25%) of the company capital amounting to fifty million (50.000.000) drachmas, or 146.735,14 Euros

Thus, the aforementioned Stamatia, wife of Apostolos Karkanias covers the entire amount of fifty million (50.000.000) drachmas, or 146.735,14 Euros and shall receive fifty thousand (50.000) shares of nominal value one thousand (1000) drachmas, or 2,93 Euros each.

Article 36

Composition of the First Board of Directors.

The first Board of Directors consists of the following persons 1) Apostolos Karkanias, son of Georgios and Vasiliki, a chemist, born in Farsala and resident of Larisa, Farmaki street, no. 3, (identification card number Ξ.697569/1985 Police Department of Larisa) with TIN 021894692 of the Second Fiscal Service of Larisa, as President and 2) Stamatia wife of Apostolos Karnanias, daughter of Christos and Eleni Tsolaki, Technical Engineer, born in Kallipefki of Tyrnavos and resident of Larisa, Farmaki street, no. 3, (identification card number Ξ.697568/1985 Police Department of Larisa) with TIN 063983574 of the Second Fiscal Service of Larisa, as Vice President, and 3) Nikolaos Romnios, son of Georgios and Christina, businessman, born in 1959 in Tyrnavos and resident of Larisa, Manolaki street, no. 9-11, (identification card number Π.941184/12-10-1991 Police Department of Larisa) with TIN 042239152 of the Second Fiscal Service of Larisa, as a member. All the above persons are Greek citizens.

"Intertranslations Ltd"
Intertranslations Translations Single Member
Limited Liability Company
Translation Services, Internet Services, Document Data Processing
4 El. Venizelou Street, Kallithea, Greece 17676
VAT No: EL095730866, Tax Office: A' KALLITHEA
Tel: +30 210 922 5000

GEORGIOS KARKANIAS
PRESIDENT

03/12/18

The President, Apostolos Karkanias, son of Georgios and the Vice President, Stamatia, wife of Apostolos Karkanias, shall represent the company, either jointly, or independently and shall bind the company through their sole signature affixed under the company's name for all deeds. The term of the above Board of Directors is set to five (5) years and expires on 31-12-2005.

Article 37

Competition clause

Article 27 shall not apply to the members of the First Board of Directors defined in article 36, which are granted a special permit to perform, directly or indirectly, actions subject to the corporate scope, up to the first General

assembly which is responsible to provide relevant license for subsequent time allowance.

Article 38

Auditors of the First Operating Period

"Intertranslations Ltd"
Intertranslations Translations Single Member
Limited Liability Company
Translation Services, Internet Services, Document Data Processing
4 El. Venizelou Street, Kallithea, Greece 17676
VAT No: EL095730866, Tax Office: A' KALLITHEA
Tel: +30 210 922 5000

GEORGIOS ~~KARKANIAS~~
PRESIDENT

03/12/18

The company, for its first operating period appoints the chartered auditors a) Christos Chiras, son of Georgios, holder of a degree from ASOEE, born in Itea of Karditsa in 1959, a Greek citizen, resident of Acharnes, Attica, number 3 Kalograni street, holder of the identification card with number N.855382/84 issued by the Police Department of Palamas, Karditsa, with Chartered Auditors-Accountants Registration number 15241, as regular auditor and b) Sofia Stathopoulou, daughter of Dimitrios, holder of a degree from ASOEE, born in Pyrgos, Elia, in 1961, a Greek citizen, resident of Acharnes, number 3 Kalograni street, holder of the identification card with number Λ.289424/78 issued by the Security Police Department of Acharnes, with Chartered Auditors-Accountants Registration number 14751 as a substitute. Their fee shall be determined by the Chartered Auditors-Accountants Association.

Article 39

The audit report attached below, drafted by the Chartered Auditor Accountant Christos G. Chiras concerns the verification of the accountings value of the assets of the converted Limited Liability company, on the basis of its conversion balance sheet dated 31.12.2000 in order for it to be converted to a Societe Anonyme, in accordance with the provisions of articles 1-5 of the L.2166/1993. The verbatim content of such report is as follows:

"Intertranslations Ltd"
Intertranslations Translations Single Member
Limited Liability Company
Translation Services, Internet Services, Document Data Processing
4 El. Venizelou Street, Kallithea, Greece 17676
VAT No: EL095730866, Tax Office: A' KALLITHEA
Tel: +30 210 922 5000

GEORGIOS KARKANIAS
PRESIDENT

03/12/12

CHARTERED AUDITOR - ACCOUNTANT: CHRISTOS G. CHIRAS

Athens, March 12, 2001

To

the Managers

of the Limited Liability Company

"A. KARKANIAS LIMITED LIABILITY COMPANY"

INDUSTRIAL AREA OF LARISA

AUDIT REPORT

For the verification of the accountings value

of the assets of the Limited Liability Company

to be converted

"A. KARKANIAS LIMITED LIABILITY COMPANY"

on the basis of the conversion balance sheet dated 31.12.2000

I. GENERAL

1. Mandate and scope of the audit

Through the document dated 13.2.2001 of "A. KARKANIAS LIMITED LIABILITY COMPANY" to the Anonymous Auditing Firm "CHARTERED ACCOUNTANTS ASSOCIATION A.E.O.E.", I was assigned the audit of the accounts of the conversion balance sheet dated 31.12.2000, in order to verify the accountings value of the assets of the aforementioned limited liability company, in order for the latter to be converted to a Societe Anonyme, in accordance with the provisions of articles 1-5 of the L. 2166/1993.

"Intertranslations Ltd"
Intertranslations Translations Single Member
Limited Liability Company
Translation Services, Internet Services, Document Data Processing
4 El. Venizelou Street, Kallithea, Greece 17676
VAT No: EL095730866, Tax Office: A' KALLITHEA
Tel: +30 210 922 5000

GEORGIOS KARKANIAS
PRESIDENT

03/12/18

The present report contains all data, information, Balance sheet funds analysis and remarks that compose the assessment of the financial position of the company as of 31.12.2000 and thus also has the effect of a Special Audit Certificate for the verification of the accountings value of the company assets on 31.12.2000, in order for it to be converted in accordance with L. 2166/1993.

The object of our audit was the Assets and Liabilities amounts of the Balance sheet dated 31.12.2000, which were intended to be transferred for the conversion of the company to a Societe Anonyme.

The detailed analysis of the above amounts, including the necessary information, our comments and remarks is provided in the following pages to this Report.

2. Foundation - Headquarters- Duration

Through the Statutes of a Limited Liability Company number 28340/10.12.1986 drafted by the Notary Public of Larisa, Dimitrios Zagouras, son of Panayotis, published in the Ltds records of the Court of First Instance of Larisa under serial number 91/19.12.1986 and in Government Gazette 3418/29/12/1986 (SAs and LTDs issue), there was foundation of a limited liability company under the trade name "A. KARKANIAS LIMITED LIABILITY COMPANY".

The Company's headquarters as per deed number 12981/31.7.1995 amending the Statutes of the limited liability company, drafted by the Notary Public of Larisa, Eleni - Evgenia Romosiou - Kleitsaki, registered in the companies register of the Court of First Instance of Larisa, with serial no. 80/31.8.1995 and published in Government Gazette 5690/4.10.1995, were defined to be in the industrial area of Larisa, and the company's duration was set to indefinite, commencing on its lawful establishment that is on 29.12.1986.

"Intertranslations Ltd"
Intertranslations Translations Single Member
Limited Liability Company
Translation Services, Internet Services, Document Data Processing
4 El. Venizelou Street, Kallithea, Greece 17676
VAT No: EL095730866, Tax Office: A' KALLITHEA
Tel: +30 210 922 5000

GEORGIOS KARKANIAS
PRESIDENT

03/12/18

3. Scope of the Company

The Company's scope as per deed number 12981/31.7.1995 amending the Statutes of the limited liability company, drafted by the Notary Public of Larisa, Eleni - Evgenia Romosiou - Kleitsaki, registered in the companies register of the Court of First Instance of Larisa, with serial no. 80/31.8.1995 and published in Government Gazette 5690/4.10.1995 is the following: The design, construction, installation of systems and machinery for cleaning waste and water treatment and the trade thereof, including import and export thereof, the assumption on the basis of contracts and the performance of all types of technical works, of any construction authority, that is Public, Municipal, Communal and Private entities, in Greece, the trade of all types of industrial products, both domestic or imported from abroad, the representation of domestic or foreign commercial firms and industries, all types of investments, the creation, purchase, lease, rent, exploitation of tourism companies of all types, the purchase of plots or the construction of buildings on them and the sale of flat properties, the construction of multi-storey buildings employing the system of consideration provision, the performance of sites and buildings reconfiguration and landscaping works.

4. Company capital - Company shares-

Participation share

The Company's capital on 31.12.2000 amounts to 200.000.000 drachmas, divided into 20.000 company shares of 10.000 drs. each.

The evolution of the company's capital appears as follows:

REASONING	GOVERNMENT GAZETTE	PARTNERS		
		APOSTOLOS KARKANIAS	STAMATIA KARKANIA	TOTAL CAPITAL
LTD Foundation	3418/29.12.1986	150,000	50,000	200,000
Capital increase	107/16.1.1990	5,100,000	1,700,000	7,000,000
Capital increase	4123/18.6.1998	6,750,000	2,250,000	16,000,000
Capital increase	5690/4.10.1995	25,500,000	8,500,000	50,000,000
Capital increase	1887/10.4.1998	112,500,000	37,500,000	200,000,000
		1-50.000.000	50,000,000	200,000,000

"Intertranslations Ltd"
Intertranslations Translations Single Member
Limited Liability Company
Translation Services, Internet Services, Document Data Processing
4 El. Venizelou Street, Kallithea, Greece 17676
VAT No: EL099730866, Tax Office: A' KALLITHEA
Tel: +30 210 922 6000

GEORGIOS KARKANIAS
PRESIDENT

03/12/18

Following the above, participation to the company's capital is as follows:

PARTNERS	COMPANY SHARES	SHARE VALUE	PARTICIPATION SHARE	PARTICIPATION PERCENTAGE
- APOSTOLOS KARKANIAS son of GEORGIOS	15,000	150,000,000	1	
- STAMATIA WIFE OF APOSTOLOS KARKANIAS	5,000	50,000,000	1	
	20,000	200,000,000		

5. Management and representation

Through the Deed of Amendment of a Limited Liability Company Statute number 12981/31.7.1995 established by the Notary Public of Larisa Eleni - Evgenia Romosiou-Kleitsaki, partners Apostolos Karkanias, son of Georgios and Stamatia, wife of Apostolos Karkanias assumed the management of company affairs and its representation for indefinite term, acting both jointly or independently and having the ability to commit the company through their signature.

6. Data on which the audit was based

For this special audit we were based on the following: a) The auditing processes deemed appropriate as per the auditing principles and rules followed by the Chartered Auditors-Accountants Association.

b) The books and records kept by the company, as well as on the necessary information and clarifications provided.

c) The written confirmations of the company that "all known liabilities and its total assets are registered in the books and that there are no pending legal proceedings and eventual liabilities that could materially alter the Financial position of the company, with the exception of a pending trial against a customer, which is detailed in the following paragraph II.B. 14.

"Intertranslations Ltd"
Intertranslations Translations Single Member
Limited Liability Company
Translation Services, Internet Services, Document Data Processing
4 El. Venizelou Street, Kallithea, Greece 17676
VAT No: EL095730866, Tax Office: A' KALLITHEA
Tel: +30 210 922 5000

GEORGIOS KARKANIAS
PRESIDENT

03/12/18

7. Registration in the Inventory and Balances book

The Assets and Liabilities data, as well as the Financial Statements dated 31.12.2000, which were approved by the General Assembly of the Shareholders on 2.3.2001 and published in the SAs and LTDs Issue of the Government Gazette with publication code 13701/27.2.2001 are registered on pages 1-69 of the validated Inventory and Balance Sheets Book under serial number and validation date 14331/29.12.2000 of the Second Fiscal Service of LARISA.

It is noted that the following Assets and Liabilities are recorded in the Inventory and Balance Sheets Book collectively, are not registered in detail in the validated book of Assets Record under number and validation date 14332/29.12.2000 of the Second Fiscal Service of LARISSA.

a) The installation expenses are described in detail on page 11 of the validated Assets Record.

b) Fixed Assets (Lands- Plots, Buildings and Technical Works, Machinery - Technical Facilities and other engineering equipment, Transportation means, Furniture and other equipment) are described in detail on pages 1-11 of the validated Assets Record.

"Intertranslations Ltd"
Intertranslations Translations Single Member
Limited Liability Company
Translation Services, Internet Services, Document Data Processing
4 El. Venizelou Street, Kallithea, Greece 17676
VAT No: EL095730886, Tax Office: A' KALLITHEA
Tel: +30 210 922 5000

GEORGIOS KARKANIAS
PRESIDENT

03/12/18

II. DETERMINATION OF THE ACCOUNTING VALUS OF ASSETS AND ANALYSIS THEREOF

A. BALANCE SHEET DATED DECEMBER 31st, 2000

ASSETS

		Amounts in drachmas		
		Acquisition value	Amortizations	Unamortized value
B.	**INSTALLATION EXPENSES**			
	1. Foundation and initial installation expenses	234,936	234,935	1
	4. Other installation expenses	837,520	837,519	1
		1,072,456	1,072,454	2
C.	**FIXED ASSETS**			
I.	**Intangible assets**			
	5. Other intangible assets	700,000	699,999	1
II.	**Tangible assets**			
	1. Lands-Plots	36,121,671		36,121,671
	3. Buildings and Technical works	270.900 680	85,016,796	185,883,884
	4. Machinery - technical facilities and other engineering equipment	84.089 200	32,896,855	51,192,345
	5. Transportation means	51.636 786	25,851,479	25,785,307
	6. Furniture and other equipment	65,920,294	44,329,298	21,590,996
		508 668 631	188,094,428	320,574,203
I	Total assets (CI+CII)	509 368 631	188,794,427	320,574,204
III.	**Participations and other long term financial receivables**			
	2. Participations in other companies			510,000
	7. Other long term receivables			230,000
				740,000
I	Total fixed assets (CI+CII+CIII)			321,314,204

"Intertranslations Ltd"
Intertranslations Translations Single Member
Limited Liability Company
Translation Services, Internet Services, Document Data Processing
4 El. Venizelou Street, Kallithea, Greece 17676
VAT No: EL095730866, Tax Office: A' KALLITHEA
Tel: +30 210 922 5000

GEORGIOS KARKANIAS
PRESIDENT

03/12/18

D.	**CURRENT ASSETS**	
I.	**Stocks**	
	2. Finished & semi-finished products	1,129,000
	4. Raw & auxiliary material - consumables - spares	52,330,107
	5. Down payments for stock purchase	4,756,121
		58,215,228
II.	**Receivables**	
	1. Customers	178,479,926
	3a. Cheques receivable (post dated)	14,100,000
	5a. Short-term receivables from participations in joint ventures	206,430,498
	11. Various debtors	31,838,329
IV	**Cash at hand**	430,848,753
	1. Cash	33,113,962
	3. Sight and forward deposits	11,690,738
		44,804,700
	Total current assets (DI+DII+DIV)	533,868,681
	ASSETS GRAND TOTAL (B+C+D+E)	855,182,887

LIABILITIES

A.	**EQUITY**	
I.	**Company capital**	
	(20.000 company shares of 10.000 drs.) 1. Paid	200,000,000
III.	**Readjustment differences**	
	Investment Subsidies	
I	2. Differences from other assets revaluation	29,066,613
I	3. Fixed assets investment subsidies	88,801,453
		117,868,066
IV	**Capital reserve**	
	1. Regular reserve	26,970,170
	2. Special reserve	8,689,588
	5. Tax exempt reserves subject to special law provisions	157,799,926
		193,459,684

"Intertranslations Ltd"
Intertranslations Translations Single Member
Limited Liability Company
Translation Services, Internet Services, Document Data Processing
4 El. Venizelou Street, Kallithea, Greece 17676
VAT No: EL095730866, Tax Office: A' KALLITHEA
Tel: +30 210 922 5000

GEORGIOS KARKANIAS
PRESIDENT

03/12/10

Total equity

Translations Ltd"
Translations Single Member
Limited Liability Company
Translation Services, Internet Services, Documen. Data Processing
4 El. Venizelou Street, Kallithea, Greece 17676
VAT No: EL095730866, Tax Office: A' KALLITHEA
Tel: +30 210 922 5000

GEORGIOS KARKANIAS
PRESIDENT

03/12/18

	(AI+AIII+AIV)	511.327 750
C.	**FINANCIAL LIABILITIES**	
II.	**Short term liabilities**	
	1. Suppliers	43,119,355
	2. Bills payable	1,137,250
	2a.Cheques payable (post dated)	75,871,434
	3. Banks, accounts for Short term liabilities	15,137,875
	5. Tax-duties liabilities	56,387,889
	6. Social Security funds	8.594.755 ,
	11.Various creditors	142,551,479
	Total liabilities (CII)	342,799,837
D	**TRANSITIONAL LIABILITY ACCOUNTS**	
	2. Accrued operating period expenses	1,055,300
	LIABILITIES GRAND TOTAL (A+C+D)	855,182,887

B. ANALYSIS OF BALANCE SHEET AMOUNTS

1. Foundation and initial installation expenses

	Acquisition value 31.12.2000	Drs.	234,936
Minus:	Amortizations up to 31.12.2000	«	234,935
	Unamortized value on 31.12.2000	Drs.	1

The above acquisition value represents the acquisition costs for company plots (notary expenses, etc.) and is analyzed on page 49 of the Inventory and Balance Sheets book.

2. Other installation expenses

	Acquisition value 31.12.2000	Drs.	837,520
Minus:	Amortizations up to 31.12.2000	«	837,519
	Unamortized value on 31.12.2000	Drs.	1

The above acquisition value refers to Share capital increase expenses paid during previous fiscal years and is analyzed on page 49 of the Inventory and Balance Sheets book.

"Intertranslations Ltd"
Intertranslations Translations Single Member
Limited Liability Company
Translation Services, Internet Services, Document Data Processing
4 [illegible] Street, Kallithea, Greece 176 7
[illegible] Tax Office: [illegible]

GEORGIOS KARKANIAS
PRESIDENT

03/12/18

3. Other intangible assets

	Acquisition value 31.12.2000	Drs.	700,000
Minus:	Amortizations up to 31.12.2000	«	699,999
	Unamortized value on 31.12.2000	Drs.	1

The above acquisition value refers to quality assurance loyalties paid and is analyzed on page 49 of the Inventory and Balance Sheets book.

4. Lands- Plots

Acquisition value 31.12.2000 Drs. 36,121,671

The amount of 36.121.671 drs. refers to the acquisition value of the following property, as formulated following value readjustment during operating periods 1992, 1996 and 2000 according to the provisions of L..2065/1992 and analyzes as follows:

Interpretations Ltd"
Translations Translations Single Member
Limited Liability Company
Translation Services, Internet Services, Document Data Processing
4 El. Venizelou Street, Kallithea, Greece 17676
VAT No: EL095730866, Tax Office: A' KALLITHEA
Tel: +30 210 922 5000

GEORGIOS KARKANIAS
PRESIDENT

03/12/18

a) Plot having a surface of 2.335 sq.m situated in the land area of the Community of Makrichori - Larisa, within the Industrial Area of Larisa. This plot is located within the Industrial block number B.T. (8), as depicted in the land-marking drawing number 212/20.1.1988 which presents the plots qualitative classification for the industrial blocks of the Industrial Area of Larisa, by virtue of the contract number 13974/30.8.1988 drafted by the Notary Public of Volos, Georgios Kalomeras, son of Christos.

b) Plot having a surface of 4.541 sq.m. located within the Industrial Area of Larisa, of the land region of the Community of Makrichori - Larisa, in the region of the Land Register of Kissavos, and in particular in the Building Block number eight (8) thereof, with drawing number

Drs. 7,202,261

261 b drafted by ETBA S.A. with regard to the amended Town Planning survey for the Industrial Area of Larisa, by virtue of the contract number 24261/28.6.1996 drafted by the Notary Public of Volos Georgios Kalomeras, son of Christos.

Drs. 10,035,610

c) Plot having a surface of 6.994sq.m. situated in the Industrial Area of Larisa, in Building Block 8, depicted by block letter identification A.B.C.D.E.Z.A. in the layout plan number 261 β/19-9-2000 titled "Amendment to the Town Planning Survey of the Industrial Area of Larisa", by virtue of the contract number 3235/29.11.2000 drafted by the notary public of Athens, Flora, wife of Elias Mplanas.

Drs. 18,883,800

Drs. 36,121,671

"Intertranslations Ltd"
Intertranslations Translations Single Member Limited Liability Company
Translation Services, Internet Services, Document Data Processing
4 El. Venizelou Street, Kallithea, Greece 17676
VAT No: EL095730866, Tax Office: A' KALLITHEA
Tel: +30 210 922 5000

GEORGIOS KARKANIAS
PRESIDENT

03/12/10

It is noted that on the plot indicated in point a above, there has been registration of pre-notations of mortgage amounting to 24.000.000 drs. evolving to the benefit of the Bank of Macedonia -Thrace S.A.

5. Buildings and technical works

	Acquisition value 31.12.2000	Drs.	270,900,680
Minus:	Amortizations up to 31.12.2000	«	85,016,796
	Unamortized value on 31.12.2000	Drs.	185,883,884

The amount of 270.900.680 drs concerns the acquisition value, or the construction costs of the properties, as formulated following readjustments, during the operating periods 1996 and 2000, in accordance with the provisions of L. 2065/1992, and with regard to the following buildings and technical works.

a) Buildings and other facilities which in accordance with the construction licenses number 105/89, 266/97 (amendment dated 29-7-98) include the following:

- industrial areas with a total surface (building) of 2090,96 m2, and volume 20420,43 m3.

- basement having a surface (building 100m2 and volume 300,00m3 I

"Intertranslations Ltd"
Intertranslations Translations Single Member
Limited Liability Company
Translation Services, Internet Services, Document Data Processing
4 El. Venizelou Street, Kallithea, Greece 17673
VAT No: EL095730866, Tax Office: A' KALLITHEA
Tel: +30 210 922 5000

GEORGIOS KARKANIAS
PRESIDENT

03/12/18

- office areas with a total surface (building) of 497,19 m2, and volume 1489,09 m3.

- Boiler room with a surface (building 29,63 m2 and volume 88,89m3	Drs.	265,894,612
b) Technical facilities in the above buildings	Drs.	2,694,347
C) Configuration of plots	Drs.	2,311,721
	Drs.	270,900,680

6. Machinery - Technical facilities and Other engineering equipment

	Acquisition value 31.12.2000	Drs.	84,089,200
Minus:	Amortizations up to 31.12.2000	«	32,896,855
	Unamortized value on 31.12.2000	Drs.	51,192,345

The acquisition value of machinery - technical facilities and other engineering equipment used by the company for the manufacture of its products or the achievement of its corporate objectives, along with the amortizations applicable to them are detailed in the Assets Record of the company, on pages 1-4.

7. Transportation means

	Acquisition value 31.12.2000	Drs.	51,636,786
Minus	Amortizations up to 31.12.2000	«	25.851.479
	Unamortized value on 31.12.2000	Drs.	25,785,307

The transportation means owned by the company, as analyzed on pages 4-5 of the Assets Record, are the following:

"Intertranslations Ltd"
Intertranslations Translations Single Member
Limited Liability Company
Translation Services, Internet Services, Document Data Processing
4 El. Venizelou Street, Kallithea, Greece 17676
VAT No: EL095730866, Tax Office: A' KALLITHEA
Tel: +30 210 922 5000

GEORGIOS KARKANIAS
PRESIDENT

03/12/18

	BRAND	TYPE	LICENCE PLATE No.	CHASIS No.	ENGINE No.
Private Truck	FIAT	290 AY	PIZ8829	ZFA29000000404888	170D012933
Private Truck	FIAT	146PD52F	PIZ8159	ZFA14600008342055	146B20001376279
Private Truck	FIAT	DUCATO 100	PIH6450	ZFA23000005180177	230A30001721961
Private Truck	FORD	TRANSIT 190	PIK5682	WFOAXXBDVAWY25781	4EC
BUS	FORD	TRANSIT BUS	PIK5683	WFOEXXGBVEWL34967	4EB
Passenger Vehicle	FIAT	TIPO SX IE	PIZ1602	ZFA16000002685510	130A10468556148
Passenger Vehicle	FIAT	COUPE	PIH6164	ZFA175000P0037044	138A10000251775
Passenger Vehicle	SAAB	SAAB 9-5	PIM2691	YS3EF45C8X3047809	B205E

8. **FURNITURE AND OTHER EQUIPMENT**

	ACQUISITION VALUE 31.12.2000	DRS.	65,920,294
MINUS:	AMORTIZATIONS UP TO 31.12.2000	«	44,329,298
	UNAMORTIZED VALUE ON 31.12.2000	DRS.	21,590,996

The amount of 65.920.294 drs is analyzed per asset category as follows:

• Furniture (analyzed on pages 5-6 of the Assets Record)	Drs.	10,038,905
• Vessels (analyzed on page 6 of the Assets Record)	«	50,847
• Office machinery (analyzed on page 6 of the Assets Record)	«	319,500
• Computers (analyzed on pages 7-9 of the Assets Record)	«	34,847,855
• Scientific equipment (analyzed on page 10 of the Assets Record)	«	15,799,124
• Telecommunications equipment (analyzed on pages 10-11 of the Assets Record)	«	1,394,929
• Other equipment (analyzed on page 11 of the Assets Record)	«	3,469,134
	Drs.	65,920,294

"Intertranslations Ltd"
Intertranslations Translations Single Member
Limited Liability Company
Translation Services, Internet Services, Documen: Data Processing
4 El. Venizelou Street, Kallithea, Greece 17676
VAT No: EL095730866, Tax Office: A' KALLITHEA
Tel: +30 210 922 5000

GEORGIOS KARKANIAS
PRESIDENT

03/12/18

9. Participations in other companies

Balance on 31.12.2000 Drs.	Drs.	510,000

"Intertranslations Ltd"
Intertranslations Translations Single Member
Limited Liability Company
Translation Services, Internet Services, Document Data Processing
4 El. Venizelou Street, Kallithea, Greece 17676
VAT No: EL095730956, Tax Office: A' KALLITHEA
Tel: +30 210 922 6000

GEORGIOS KARKANIAS
PRESIDENT

03/12/18

The amount of 510.000 drs. concerns participations of the company in Joint Ventures for the performance of technical works, these are the following:

- Joint Venture AKRITAS ATE B - A. KARKANIAS LTD. - M. CHATZILIOU (Participation percentage 49,5%)	Drs.	495,000
- Joint Venture SOURLA ATE - A. KARKANIAS LTD. (participation percentage 3%)	Drs.	15,000
	Drs.	510,000

It is noted that the above Joint Ventures are not audited by a Chartered Auditor - Accountant.

10. Other long term receivables

Balance on 31.12.2000	Drs.	230,000

The amount of 230.000 drs. refers to guarantees provided to PPC.

11. Finished and semi-finished products

Balance on 31.12.2000	Drs.	1,129,000

The amount of 1.129.000 drs. refers to the value of finished products stocks (biological treatment machinery parts) on 31.12.2000. They are described in detail on page 14 of the Inventory and Balance Sheets Book.

12. Raw and auxiliary materials - Αναλώσιμα υλικά και Ανταλλακτικά

Balance on 31.12.2000	Drs.	52,330,107

The amount of 52.330.107 drs. represents the acquisition costs of the stock found in the company's warehouses on 31.12.2000. It is listed in detail on pages 1-14 of the Inventory and Balance Sheets book and refers to the following:

"Intertranslations Ltd"
Intertranslations Translations Single Member Limited Liability Company
Translation Services, Internet Services, Document Data Processing
4 El. Venizelou Street, Kallithea, Greece 17676
VAT No: EL095730866, Tax Office: A' KALLITHEA
Tel: +30 210 922 5000

GEORGIOS KARKANIAS
PRESIDENT

- Raw and auxiliary material, consumables, parts for the construction of machinery and other equipment for biological treatment facilities, machinery spare parts Drs. 50,703,1(

- BONFIGLIOLI Power motors « 1.627.000

Drs. 52,330,107

13. Down payments for stock purchase

Balance on 31.12.2000 Drs. 4,756,121

The amount of 4.756.121 drs refers to down payments to suppliers and is detailed on page 58 of the Inventory and Balance Sheets book.

14. Customers

Balance on 31.12.2000 Drs. 178,479,926

The above amount refers to the unsettled customer receivables on 31.12.2000, arising from company sales on credit and the provision of technical works implementation services and are registered in detail on pages 51-53 of the Inventory and Balance Sheets book

It is noted that customer receivables on 31.12.2000, include unchanged debit balances from previous operating periods amounting to 1.533.860 drs. as well as a litigated claim against a customer amounting to 20,515,008 drs. For the coverage of the damage that may arise from the non-collection of the above litigated and defaulted receivables, there has not been formation of a provision against the results of the operating period 2000.

15. Cheques receivable (postdated)

Balance on 31.12.2000 Drs. 14,100,000

"Intertranslations Ltd"
Intertranslations Translations Single Member Limited Liability Company
Translation Services, Internet Services, Document Data Processing
4 El. Venizelou Street, Kallithea, Greece 17676
VAT No: EL095730866, Tax Office: A' KALLITHEA
Tel: +30 210 922 5000

GEORGIOS KARKANIAS
PRESIDENT

03/12/18

The above amount represents the value of two postdated cheques appearing on page 54 of the Inventory and Balance Sheets book:

- Cheque expiring on 19.1.2001	Drs.	11,600,000
- Cheque expiring on 10.3.2001	«	2,500,000
	Drs.	14,100,000

16. <u>Short-term receivables from participations in joint ventures</u>

Balance on 31.12.2000 Drs. 206,430,498

The above amount represents company's receivables on 31.12.2000, arising from income of participations in Joint Ventures for the execution of technical works and is registered in detail on pages 53-54 of the Inventory and Balance Sheets book.

It is noted that out of the total amount stated above, the amount of 84.584.285 drs. refers to participation income for the operating period 2000, arising from Joint Venture certificates to which the company participates and which are not audited by a Chartered Auditor - Accountant, while the remainder receivable amount of 121.846.213 drs. arises from participation income of the previous operating period 1999 and relates to Joint Ventures which are also not audited by a Chartered Auditor Accountant.

17. <u>Various debtors</u>

Balance on 31.12.2000 Drs. 31,838,329

The above amount of 31.838.329 drs. is analyzed on pages 53 and 64 of the Inventory and Balance Sheets book and concerns receivables from the Greek State with regard to the following:

GEORGIOS KARKANIAS
PRESIDENT

"Intertranslations Ltd"
Intertranslations Translations Single Member
Limited Liability Company
Translation Services, Internet Services, Document Data Processing
4 El. Venizelou Street, Kallithea, Greece 17676
VAT No: EL095730888, Tax Office: A' KALLITHEA
Tel: +30 210 922 5000

03/12/18

- Debit balance for Income tax clearance of the operating period 1999. drs. 4,714,976

- Debit balance for Income tax clearance of the operating period 2000. drs. 27,123,353

drs. 31,838,329

With regard to the above receivables, the following are noted:

- On 8/1/2001 there was collection from the Greek State of the amount 4.710.260 drs. against a tax return arising from the income tax statement of the company for the operating period 2000.

- The debit balance of the Income tax clearance of the year 2000 arises from the following:

Prepaid income tax 3·% over Income from Public Technical Works	drs. 30,281,534
(+) Income tax withheld 3% over income from Private technical works	« 13.265.707
	drs. 43,547,241
Minus: Income tax on taxable operating period income for 2000	drs. 16,423,888
Debit balance on 31.12.2000	drs. 27,123,353

It is noted that the company has been audited up to the operating period of 1998 and thus its taxation liabilities for the last two operating periods have not been finalized.

18. <u>Cash at hand</u>

Balance on 31.12.2000 Drs. 44,804,700

The above amount is detailed on pages 54-55 of the Inventory and Balance Sheets book and refers to the following:

"Intertranslations Ltd"
Intertranslations Translations Single Member
Limited Liability Company
Translation Services, Internet Services, Document Data Processing
4 El. Venizelou Street, Kallithea, Greece 17676
VAT No: EL095730666, Tax Office: A' KALLITHEA
Tel: +30 210 922 5000

GEORGIOS KARKANIAS
PRESIDENT

03/12/18

- Cash Balance of "cash" account As evidenced from the examination of this account, it arises from standard company transactions.	Drs.	33,113,962
- Sight deposits to National Bank Account 81447043	Drs.	50,000
- Sight deposits to Piraeus Bank Account 5606-004843-693	Drs.	169,999
- Sight deposits to Ergasias Bank Account 017/60904-00000/10	Drs.	625,351
Sight deposits to Laiki Bank Account 012/027850/001	Drs.	2,915
- Debit balance of a joint credit account in Ergasias Bank account no.017/60904-00101/16	Drs.	841,507
- Debit balance of a joint credit account in Laiki Bank, account no. 012-027850-470	Drs.	1,036
- Forward deposit of guaranteed capital GLOBAL TOP 10 expiring on 20.12.2002 with Laiki Bank	Drs.	5,000,000
- Forward deposit of guaranteed capital EUROGLOBAL expiring on 20.12.2002 with Laiki Bank	Drs.	5,000,000
Total	Drs.	44,804.700

19. <u>Company capital</u>

Balance on 31.12.2000	Drs.	200,000,000

The company capital registered on page 55 of the Inventory and Balance Sheets book is detailed in previous paragraph I.4.

20. <u>Differences from the revaluation of other assets</u>

Balance on 31.12.2000 Drs. 29,066,613

This relates to the readjustment difference (overvalue) arising from the revaluation of company property, according to L. 2065/1992 and analyzes as follows:

"Intertranslations Ltd"
Intertranslations Translations Single Member
Limited Liability Company
Translation Services, Internet Services, Document Data Processing
4 El. Venizelou Street, Kallithea, Greece 17676
VAT No: EL095730866, Tax Office: A' KALLITHEA
Tel: +30 210 922 5000

GEORGIOS KARKANIAS
PRESIDENT

08/12/18

- Readjustment difference that arose in operating period 1996 and has not yet been capitalized	Drs.	13,618,006
- Readjustment difference that arose in this operating period from the revaluation of company property on 30.12.2000	Drs.	15,448,607
	Drs.	29,066,613

21. Fixed assets investment subsidies

Balance on 31.12.2000 Drs. 88,801,453

This concerns the balance of subsidies according to L.1262/1982 and 1892/1990 collected during previous operating periods and corresponds to the unamortized balance of funded assets as follows:

- Subsidies corresponding to the unamortized value of funded buildings	Drs.	44,333,024
- Subsidies corresponding to the unamortized value of funded machinery	Drs.	44,468,429
	Drs.	88,801,453

22. Capital reserve

Balance on 31.12.2000 Drs. 193,459,684

The above amount is detailed on pages 55-56 of the Inventory and Balance Sheets book and refers to the following:

- Regular reserve formed by the profit of operating period 2000 and previous periods in accordance with article 24 of the L. 3190/1955 Drs. 26,970,170

- Special reserves formed by the profit of previous operating periods for the coverage of reserve formulation obligations as per laws 1262/82 and 1892/90 Drs. 8,689,588

"Intertranslations Ltd"
Intertranslations Translations Single Member
Limited Liability Company
Translation Services, Internet Services, Document Data Processing
4 El. Venizelou Street, Kallithea, Greece 17676
VAT No: EL095730866, Tax Office: A' KALLITHEA
Tel: +30 210 922 5000

GEORGIOS KARKANIAS
PRESIDENT

03/12/18

- Reserves from non-taxed profit of technical businesses formulated using the profit of operating period 2000 and prior operating periods 1998, 1999

Drs. 149,854,935

- Non-taxed reserves subject to special law provisions, formulated using profit from previous operating periods

Drs. 7,944,991

Drs. 193,459,684

It is noted that non-taxed profit of technical businesses reserves include reserves taxed according to article 7 of the L. 2579/1998 drs. 18,670,924.

23. Suppliers

Balance on 31.12.2000 Drs. 43,119,355

The above amount of 43.119.355 drs is analyzed, per supplier, on pages 57-61 of the Inventory and Balance Sheets book and concerns the unsettled liabilities of the company on 31.12.2000 to:

- domestic suppliers	Drs.	35,868,322
- foreign suppliers in Foreign Currency (F.C.) (Lits 41.070.000)	Drs.	7,251,033
	Drs.	43,119,355

It is noted that there has not been valuation of liabilities in Lits on 31.12.2000, on the basis of the official F.C. price, given that the exchange differences arising per supplier were insignificant.

24. Bills payable

Balance on 31.12.2000 Drs. 1,137,250

"Intertranslations Ltd"
Intertranslations Translations Single Member
Limited Liability Company
Translation Services, Internet Services, Document Data Processing
4 El. Venizelou Street, Kallithea, Greece 17676
VAT No: EL095730866, Tax Office: A' KALLITHEA
Tel: +30 210 922 5000

GEORGIOS KARKANIAS
PRESIDENT

03/12/18

The above amount refers to previous operating periods and as stated, verbally, there are no current liabilities and thus it must be settled through transfer to results.

25. Cheques payable

Balance on 31.12.2000	Drs.	75,871,434

This concerns seventy three (73) payable cheques and as it arises from their analysis on pages 62-63 of the Inventory and Balance Sheets book they expire during the period 29/12/2000 to 12/5/2001.

26. Banks, short term liability accounts

Balance on 31.12.2000	Drs.	15,137,875

The above amount concerns short term bank liabilities appearing on pages 61-62 of the Inventory and Balance Sheets book as follows:

- Loan account with the Bank of Cyprus, account no. 1097359 in Drs.	Drs.	57,407
- Loan in EUROS from Ergasias Bank, account no. 017/60904-33100/19 €44256,69	Drs.	15,080,468
	Drs.	15,137,875

27. Tax-duties liabilities

Balance on 31.12.2000	Drs.	56,387,889

The above amount of 56.387.889 drs. is analyzed on pages 63-65 of the Inventory and Balance Sheets book and concerns liabilities related to the following:

"Intertranslations Ltd"
Intertranslations Translations Single Member
Limited Liability Company
Translation Services, Internet Services, Document Data Processing
4 El. Venizelou Street, Kallithea, Greece 17676
VAT No: EL095730866, Tax Office: A' KALLITHEA
Tel: +30 210 922 5000

GEORGIOS KARKANIAS
PRESIDENT

03/12/18

- VAT for December 2000	Drs.	49,296,911
- Paid Services Provision Tax - 6th two-month period	«	591,882
-Paid Services Provision Stamp Duties .-6th two-month period	«	313,743
- Freelance services fees tax - 6th two-month period	«	4,466,040
- Overvalue tax, L. 2065/1992	«	1,104,678
- Contractor fees' tax	«	337,515
- Technical works tax 3%	«	223,524
- Publication tax-stamp attributable to TSPEATH (Pension Fund for the Personnel of Newspapers in Athens and Thessaloniki)	«	53,596
Total	Drs.	56,387,889

It is noted that all liabilities listed above were paid in due time during the following operating period, with the exception of the overvalue tax as per L. 2065/1992, for which the second installment liability expires on 31/7/2001.

28. Social Security funds

Balance on 31.12.2000 Drs. 8,594,755

The above amount of 8.594.755 drs. is analyzed on pages 65-66 of the Inventory and Balance Sheets book and concerns liabilities related to the following:

- Social Security Fund contributions for wages and salaries of employees (December plus Christmas bonus)	Drs.	4,606,700
- Auxiliary Social Security fund for Electrical Engineers of Greece (TEAIE) (December plus Christmas bonus)	«	36,730
- ETEM (December plus Christmas bonus)	«	132,208
- Constructions Social Security Fund (December 2000)	«	2,689,067
- Bonus stamp duties for constructions (December 2000)	«	1,130,050
	Drs.	8,594,755

29. Various creditors

Balance on 31.12.2000 Drs. 142,551,279

"Intertranslations Ltd"
Intertranslations Translations Single Member
Limited Liability Company
Translation Services, Internet Services, Document Data Processing
4 El. Venizelou Street, Kallithea, Greece 17676
VAT No: EL095730866, Tax Office: A' KALLITHEA
Tel: +30 210 922 5000

GEORGIOS KARKANIAS
PRESIDENT

08/12/18

(Page 62 of the Inventory and Balance Sheets book)

This refers to profit of the current operating period attributable to the partners. These are allocated per partner as follows:

- Apostolos Karkanias, son of Georgios	Drs. 106,913,459
- Stamatia wife of Apostolos Karkanias	« 35.637.820
	Drs. 142,551,279

30. Accrued operating period expenses

Balance on 31.12.2000 Drs. 1,055,300

(Page 62 of the Inventory and Balance Sheets book) Concerns payable expenses of the operating period 2000 attributable to the Greek Telecommunications Organization for the telephone fees of the period 12.9.2000-8.11.2000.

C. CONCERNING THE RESULTS OF THE OPERATING PERIOD 2000

Through the sampling audit of the results accounts and their reconciliation, no differences were evidenced.

III. CONCLUSION

Following the information reported above concerning the conversion Balance sheet funds dated 31/12/2000, We certify that the accounting values of the assets are the ones presented in detail in the Inventory and Balance Sheets book of the converted company "A. KARKANIAS LIMITED LIABILITY COMPANY" on pages 1 to 69 and that their value, as depicted in the Balance sheet arises from the inventory data.

"Intertranslations Ltd"
Intertranslations Translations Single Member
Limited Liability Company
Translation Services, Internet Services, Document Data Processing
4 El. Venizelou Street, Kallithea, Greece 17676
VAT No: EL095730866, Tax Office: A' KALLITHEA
Tel: +30 210 922 5000

GEORGIOS KARKANIAS
PRESIDENT

03/12/18

The Company meets all requirements provisioned by L. 2166/1993 for its conversion to a Societe Anonyme.

That is:

a) It maintains C class books as per the Books and Records Code (Presidential Decree 186/1992.

b) Has established Balance sheets corresponding to more than one operating periods.

c) The Share Capital of the Societe Anonyme arising from the conversion exceeds the minimum amount of one hundred million drachmas provisioned by L.2579/1998.

We further notify you that we are willing to provide Public Authorities to which the present report is to be filed, with any additional clarification concerning the data of the Balance Sheet dated 31.12.2000 analyzed and commented above.

Respectfully

CHRISTOS G. CHIRAS

CHARTERED AUDITOR ACCOUNTANT

REG.NO. S.O.E.L. 15241

S.O.L. a.e.o.e.

GEORGIOS KARKANIAS
PRESIDENT

"Intertranslations Ltd"
Intertranslations Translations Single Member
Limited Liability Company
Translation Services, Internet Services, Document Data Processing
4 El. Venizelou Street, Kallithea, Greece 176 76
VAT No: EL095730866, Tax Office: A' KALLITHEA
Tel: +30 210 922 5000

l 03/12/18

"Intertranslations Ltd"
Intertranslations Translations Single Member
Limited Liability Company
Translation Services, Internet Services, Document Data Processing
4 El. Venizelou Street, Kallithea, Greece 17676
VAT No: EL095730866, Tax Office: A' KALLITHEA
Tel: +30 210 922 5000

GEORGIOS KARKANIAS
PRESIDENT

03/12/10

With regard to all assets of the limited liability company "A. KARKANIAS LIMITED LIABILITY COMPANY" under conversion which are stated and described in the above audit report of the chartered auditor, namely, the vehicles, machinery and other tangible and intangible assets, the receivables and payables, and generally all elements included in the report, the parties contracted hereto, as sole partners of the converted limited liability company, are providing them herein to the societe anonyme founded by means of conversion with the trade name "KARKANIAS ENVIRONMENTAL TECHNOLOGIES ANONYMOUS COMPANY" and hereby assign, transfer, grant, and deliver them to the said societe anonyme, in full right of ownership, title and possession and including all rights emanating therefrom, both personal and material and waive all related actions and objections and are now henceforth alien to any right rendering thus the Societe Anonyme founded by means of conversion the full and absolute holder, proprietor and owner thereof.

Further on, under their stated capacity, they promise that all assets contributed, assigned, transferred, granted and delivered above are free from any lien, debt, mortgage, pre-notation to mortgage, pledge, third party claim and

"Intertranslations Ltd"
Intertranslations Translations Single Member
Limited Liability Company
Translation Services, Internet Services, Document Data Processing
4 El. Venizelou Street, Kallithea, Greece 17676
VAT No: EL095730866, Tax Office: A' KALLITHEA
Tel: +30 210 922 5000

GEORGIOS KARKANIAS
PRESIDENT

8

8/12/18

questioning, dispute and difference and all kinds of rights, and they further waive unconditionally from any right to dispute, breach or cancel such contribution and offer to the societe anonyme of all assets named above, for any material and essential reason, including those stipulated in articles 178, 179 and 388 of C.C. the preconditions and cases of which do not apply hereto as certified by the parties. The assets included in the audit report above also include the following:

1) Plot having a surface of 2.335 sq.m situated in the land area of the Community of Makrichori - Larisa, within the Industrial Area of Larisa. This plot is located within the Industrial block number B.T. (8), as depicted in the land-marking drawing number 212/20-1-1988 which presents the plots qualitative classification for the industrial blocks of the Industrial Area of Larisa, by virtue of the contract number 13.974/30-8-1988 drafted by the Notary Public of Volos, Georgios Kalomeras, son of Christos, which is registered in volume 22, under number 315 of the book of transcriptions of the Land's Register of Kissavos,

"Intertranslations Ltd"
Intertranslations Translations Single Member
Limited Liability Company
Translation Services, Internet Services, Document Data Processing
4 El. Venizelou Street, Kallithea, Greece 17676
VAT No: EL095730886, Tax Office: A' KALLITHEA
Tel: +30 210 922 5000

GEORGIOS KARKANIAS
PRESIDENT

03/12/10

2.- A plot having a surface of 4.541 sq.m. located within the Industrial area of Larissa, of the land region of the Community of Makrichori of Larissa, situated within the region covered by the Land Registry of Kissavos, and particularly in Construction block number eight (8) as per drawing number 261b drafted by ETBA S.A. having as its subject the amendment of the town plan survey of the Industrial Area of Larisa, by virtue of the contract number 24.261/28-6-1996 drafted by the Notary Public of Volos, Georgios Kalomeras, son of Christos, such block being registered in volume 28 under no. 47 of the book of transcriptions of the Land's Register of Kissavos, The above plots constitute an integral plot with a total surface of 6.876 sq.m. and

c) Plot having a surface of 6,994 sq.m. situated in the Industrial Area of Larisa, in Building Block 8, depicted by block letter identification A-B-C-D-E-Z-A. in the layout plan number 261 β/19-9-2000 titled "Amendment to the Town Planning Survey of the Industrial Area of Larisa", by virtue of the contract number 3235/29-11-2000 drafted by the notary public of Athens, Flora, wife of Elias Mplanas, transcribed in volume 32 and under no. 28 9 of the book of transcriptions of the

Land's Register of Kissavos, including the buildings and other facilities situated on them, which in accordance with the construction licenses numbers 105/89, 266/97 (revision 29-7-98) include a) manufacturing sites with a total (building) surface of 2.090,98 sq.m., volume 20.420,43 cubic meters,

"Intertranslations Ltd"
Intertranslations Translations Single Member
Limited Liability Company
Translation Services, Internet Services, Document Data Processing
4 El. Venizelou Street, Kallithoa, Greece 17676
VAT No: EL095730866, Tax Office: A' KALLITHEA
Tel: +30 210 922 5000

GEORGIOS KARKANIAS
PRESIDENT

08/12/18

b) basement having a surface (building) 100 sq.m. and volume 300.00 cubic meters, c) office areas with a total surface (building) of 497,19 sq.m. and volume 1.489,09 cubic meters, and d) boiler room with a surface (building) 29,63 sq.m. and volume 88,89 cubic meters.

Moreover, the limited liability company under the trade name "A. KARKANIAS LIMITED LIABILITY COMPANY" owns the following vehicles,

1.- A truck with license plate number PIZ 8829, private vehicle, manufactured by FIAT, model 290AY, with chassis number ZFA29000000404888 and engine number 170D012933,

2.- A truck with license plate number PIZ 8159, private vehicle, manufactured by FIAT, model 146PD52F, with chassis number ZFA14600008342055 and engine number 146B20001376279,

3.- A truck with license plate number PIH 6450, private vehicle, manufactured by

"Intertranslations Ltd"
Intertranslations Translations Single Member
Limited Liability Company
Translation Services, Internet Services, Document Data Processing
4 El. Venizelou Street, Kallithea, Greece 17675
VAT No: EL095730866, Tax Office: A' KALLITHEA
Tel: +30 210 922 5000

GEORGIOS KARKANIAS
PRESIDENT

03/12/18

FIAT, model DUCATO 100, with chassis number ZFA23000005180177 and engine number 230A30001721961

4.- A truck with license plate number PIK 5682, private vehicle manufactured by FORD, model TRANSIT 190, with chassis number WFOAXXBDVAWY25781 and engine number 4EC, 5.- A BUS with license plate number PIK 5683, manufactured by FORD, model TRANSIT BUS, with chassis number WF0EXXGBVEWL349 67 and engine number 4EB 6.- A passenger vehicle with license plate number PIZ 1602 manufactured by FIAT, model TIPO SX IE, with chassis number ZFA16000002685510 and engine number 130A10468556148

6.- A passenger vehicle with license plate number PIH 6164, manufactured by FIAT, model COYPE, with chassis number ZFA175000P0037044 and engine number 138A10000251775, and

7.- A passenger vehicle with license plate number PIM 2691, manufactured by SAAB, model SAAB 9-5, with chassis number YS3EF45C8X3047809 and engine number B205E.

With regard to the above property and cars, in their current status and along with all rights related to and derived from them, of any nature, personal and material

"Intertranslations Ltd"
Intertranslations Translations Single Member
Limited Liability Company
Translation Services, Internet Services, Document Data Processing
4 El. Venizelou Street, Kallithea, Greece 17676
VAT No: EL095730866, Tax Office: A' KALLITHEA
Tel: +30 210 922 5000

GEORGIOS KARKANIAS
PRESIDENT

08/12/18

and including all relevant actions and objections concerning the above, the parties hereto, being the sole partners of the converted limited liability company under the trade name "A. KARKANIAS LIMITED LIABILITY COMPANY" are providing them herein to the societe anonyme founded by means of conversion with the trade name "KARKANIAS ENVIRONMENTAL TECHNOLOGIES ANONYMOUS COMPANY" and hereby assign, transfer, and deliver them to the said societe anonyme, in full right of ownership, title and possession, free from any lien, pledge, sequestration, mandatory or preservative receivership, inheritance rights, third party receivership, claim, escrow, tax debt, both public and municipal, traffic duties,

prize seizure, customs duties, dispute, difference, questioning and all kinds of legal flaws.

Article 40

The parties herein agree and stipulate that the contribution derived from the above limited liablity company being converted shall include: a) all other tangible assets that belong in title, possession and ownership to the company being converted, even if not specifically referenced or described

"Intertranslations Ltd"
Intertranslations Translations Single Member
Limited Liability Company
Translation Services, Internet Services, Document Data Processing
4 El. Venizelou Street, Kallithea, Greece 17671
VAT No: EL095730866, Tax Office: A' KALLITH
Tel: +30 210 922 5000

GEORGIOS KARKANIAS
PRESIDENT

03/12/18

in detail above, b) all fixed or other assets that the company under conversion may acquire till the foundation of the societe anonyme derived from the conversion and c) all intangible assets and rights that belong to the limited liability company being converted, even if not referenced, or partially referenced above, or similar items that are acquired by it till the lawful conversion to a societe anonyme. All these are transferred to the societe anonym founded by means of conversion.

The parties hereto agree and stipulate that all transactions performed and under performance following date 31.12.2000 during which the accountings value of the assets of the limited liability company under conversion was performed on the basis of the audit report of the chartered auditor accountant Christos G. Chiras and up to the publication of the present statute, and all types of deeds of the limited liability company with trade name "A. KARKANIAS LIMITED LIABILITY COMPANY' converted herein, as these appear in the accounting books, are deemed performed on behalf of the societe anonyme company founded herein by means of conversion and having the trade name

GEORGIOS KARKANIAS
PRESIDENT

"Intertranslations Ltd"
Intertranslations Translations Single Member
Limited Liability Company
Translation Services, Internet Services, Document Data Processing
4 El. Venizelou Street, Kallithea, Greece 17676
VAT No: EL095730856, Tax Office: A' KALLITH
Tel: +30 210 922 5000

03/12/18

"KARKANIAS - ENVIRONMENTAL TECHNOLOGIES SOCIETE ANONY" to which they are transferred ipso jure, as long as they do not create a loss, in which case the parties hereto, founders of the societe anonyme founded through conversion, are responsible to cover as per their participation rate in the capital of the limited liability company being converted.

Moreover, the parties contracted hereto agree and stipulate that all accounting entries related to the transactions and deeds of the previous paragraph, which are reported in the

accounting books of the company converted shall be transferred collectively to the books of the societe anonyme, upon publication of the present statute.

Article 41

The conversion of the limited liability company titled "A. KARKANIAS LIMITED LIABILITY COMPANY' to the societe anonyme titled "KARKANIAS ENVIRONMENTAL TECHNOLOGIES SOCIETE ANONYME" performed herein as per

articles 1- 5 of the L.2166/1993

"Intertranslations Ltd"
Intertranslations Translations Single Member
Limited Liability Company
Translation Services, Internet Services, Document Data Processing
4 El. Venizelou Street, Kallithea, Greece 176
VAT No: EL095730666, Tax Office: A' KALLITH
Tel: +30 210 922 5000

GEORGIOS KARKANIAS
PRESIDENT

03/12/10

is concluded through the publication of the present statutes and of the decision of the competent monitoring authority in the SAs and Ltds' Issue of the Government Gazette. Following such publication and in compliance with all formalities of article 8 par. 1 of the Law 3190/1955 all assets and liabilities of the limited liability company being converted is transferred by means of contribution in kind to the societe anonyme founded through conversion, to which, ipso jure and without further formalities, evolve the entirety of the assets of the limited liability company being converted, and the societe anonyme assumes all of its rights and responsibilities, including its lawful relations with any natural or legal entity, of public or private law, domestic or foreign and with any public, municipal, communal or other authority, or service, while it assumes all credit and all other types of contracts of the converted company with any third party. In particular, the societe anonyme founded by means of conversion in its relations to banks acquires full ownership, title and possession of all assets of the limited liability company being converted and has the rights, in accordance with the stipulations of the present conversion to hold, possess, and avail them

"Intertranslations Ltd"
Intertranslations Translations Single Member
Limited Liability Company
Translation Services, Internet Services, Document Data Processing
4 El. Venizelou Street, Kallithea, Greece 17676
VAT No: EL095730866, Tax Office: A' KALLITHEA
Tel: +30 210 922 5000

GEORGIOS KARKANIAS
PRESIDENT

GEORGIOS KARKANIAS
PRESIDENT

03/12/18

as per its discretion in full and absolute ownership right, including explicitly all intangible assets and rights, even if these assets are partially referenced or not referenced herein. Moreover, it has the right to continue under the same terms all agreements and transactions of the limited liability company being converted and transact the related accounts as a successor to the said company, in all relations and rights and further continue any eventual legal proceedings, which are not disrupted by virtue of the above conversion provisions given that the limited liability company converted to a societe anonyme continues to exist under the form of a societe anonyme.

Article 42

All contracting parties hereto state that the accept expressively and unconditionally the contribution and transfer of all assets named above to the societe anonyme founded by means of conversion under the trade name "KARKANIAS- ENVIRONMENTAL TECHNOLOGIES SOCIETE ANONYME" as well as

"Intertranslations Ltd"
Intertranslations Translations Single Member
Limited Liability Company
Translation Services, Internet Services, Document Data Processing
4 El. Venizelou Street, Kallithea, Greece 17676
VAT No: EL095730866, Tax Office: A' KALLITHEA
Tel: +30 210 922 6000

GEORGIOS KARKANIAS
PRESIDENT

05/12/18

all references above and further state that they waive expressively and unconditionally any right and action or objection to disrupt or breach the present document and the conversion performed by it, for any material or formal reason and cause, including those referenced in articles 178, 179 and 388 of the C.C.

Article 43

The contracting parties provide an irrevocable order and mandate to Nikolaos Milionis (TIN 010259482) a lawyer, resident of Larisa, so that the latter acting independently may submit the present Statute for approval to the competent Prefecture service and represent them before such Authority, as well as to establish and sign as their proxy a notary deed providing for any omissions and correcting any errors, or even

amend or modify the provisions of the statute freely, as per his discretion.

The following documents are attached hereto:

1) as per article 81 of the L.2238/94 a relevant statement of the Second Fiscal Service of Larisa, and 2) Affidavits of the contracting parties as per L. 1599/86 in accordance with article 3 par. 15 of the L.2242/94, 3) according to par. 2 article 32 of the L.2459/97 a relevant statement of the Second Fiscal Service of Larisa, 4) a relevant statement according to the

"Intertranslations Ltd"
Intertranslations Translations Single Member
Limited Liability Company
Translation Services, Internet Services, Document Data Processing
4 El. Venizelou Street, Kallithea, Greece 17676
VAT No: EL095730866, Tax Office: A' KALLITHEA
Tel: +30 210 922 5000

GEORGIOS KARKANIAS
PRESIDENT

provisions of L.2130/93, 5) a relevant tax clearance certificate of the selling company, 6) a relevant tax clearance certificate as per the provisions of article 3 par. 1 of the decision no. Φ21/116/2000 issued by the Minister of Labor and Social Security, 7) a statement as per L.1599/86 according to the provisions of article 65 of L.2538/97 and 8) copies of the construction licenses no. 105/1989 and 266/1997 related to the above buildings, in accordance with the provisions of L.1337/1983.

With regard to the contribution of the above property, there has been submission to the Second Fiscal Service of Larisa, the property transfer tax statements no. 792/2001 and 793/2001 which were found negative for debt, as per L.2166/93.

I, the Notary Public, informed the

contracting parties on the following: 1) the provisions of the C.C. concerning the transcription of this contract and all sequences of any omission to perform 2) the provisions of L.1587/1950 as currently in effect and any penalties for eventual violation thereof, 3) the provisions of the law "concerning town plan", 4) the responsibility and obligation of the parties to pay the taxes and duties of the contributed assets for the last three years period (L.4045/50) and 5) the provisions of the Law Decree

"Intertranslations Ltd"
Intertranslations Translations Single Member
Limited Liability Company
Translation Services, Internet Services, Document Data Processing
4 El. Venizelou Street, Kallithea, Greece 17673
VAT No: EL095730868, Tax Office: A' KALLITHEA
Tel: +30 210 922 5060

GEORGIOS KARKANIAS
PRESIDENT

03/12/19

1003/1971 of L.651/1977 and L.1337/1983.

Article 44

It is noted that: 1) The contracting parties stated solemnly and fully aware of the consequences of the L.1599/1986 that their permanent residence is the one referenced at the beginning of the present contract, 2) for the foundation of the referenced company there shall be payment of lawyer attendance fees amounting to ------ drachmas and 3) I reminded to the contracting parties the provisions of the Commerce Law, the Codifies Law 2190/1920 as in effect, the Presidential Decree 409/12-11-1986, 498/87 and Law 1675/23-12-1986 as well as the fact that following registration with the Societes Anonymes Register of the related foundation license and the approval of the statutes by the competent Authority, a related announcement must be published in the SAs and Ltds Issue of the Government Gazzete in accordance with the provisions of the C.L. 2190/1920, as in effect.

This contract was established in draft by Lawer Nikolaos Millionis, resident of Larisa, TIN 010259482. The fee of the above lawyer was paid at the Larisa's Bar Association Fund, as derived from the collection receipt number 70309/01 issued by the Larisa's Bar,

"Intertranslations Ltd"
Intertranslations Translations Single Member
Limited Liability Company
Translation Services, Internet Services, Document Data Processing
4 El. Venizelou Street, Kallithea, Greece
VAT No: EL095730868, Tax Office: A' KALI
Tel: +30 210 922 5000

GEORGIOS KARKANIAS
PRESIDENT

03/12/18

attached hereto. The total cost for the foundation of the societe anonyme through conversion amounts to 1.240.100 drachmas.

The above statements of the contracting parties were registered in this contract which was drafted on forty six (46) sheets. My duties and fees for one copy amount to 212.100 drachmas, of which 62.500 drachmas are attributed to the Law Professionals Fund.

This contract was read clearly to the contracting parties and the attending lawyers, and it was heard, verified, agreed to content and signed by them and by me, the Notary Public, in accordance with the law.

THE CONTRACTING PARTIES THE ATTENDING LAWYER

THE NOTARY PUBLIC

(S.P.) ELENI ROMOSIOU - KLEISAKI
Exact copy
Larisa on the same day
The Notary Public of Larisa

"Intertranslations Ltd"
Intertranslations Translations Single Member
Limited Liability Company
Translation Services, Internet Services, Document Data Processing
4 El. Venizelou Street, Kallithea, Greece 17676
VAT No: EL095730866, Tax Office: A' KALLITHEA
Tel: +30 210 922 5000

GEORGIOS KARKANIAS
PRESIDENT

03/12/18

GEORGIOS ~~KARKANTAS~~
PRESIDENT

08/12/18

ΕΛΕΝΗ ΡΟΜΟΣΙΟΥ - ΚΛΕΙΤΣΑΚΗ
ΣΥΜΒΟΛΑΙΟΓΡΑΦΟΣ
ΣΚ. ΣΟΥΤΣΟΥ 6 - ΛΑΡΙΣΑ
ΤΗΛ. 5[illegible] - 535200
ΑΦΜ: [illegible] - Α' ΔΟΥ

16:ΚΑΡΚΑΝΙΑΣ ΑΕ

ΑΡΙΘΜΟΣ **21.180**

ΣΥΣΤΑΣΗ ΑΝΩΝΥΜΟΥ ΕΤΑΙΡΙΑΣ ΑΠΟ ΜΕΤΑΤΡΟΠΗ ΕΤΑΙΡΙΑΣ ΠΕΡΙΟΡΙΣΜΕΝΗΣ ΕΥΘΥΝΗΣ (ΕΠΕ) ΒΑΣΕΙ ΤΩΝ ΑΡΘΡΩΝ 1-5 ΤΟΥ Ν.2166/1993 ΜΕΤΟΧΙΚΟ ΚΕΦΑΛΑΙΟ ΔΡΑΧΜΕΣ 200.000.000 ή 586.940,57 ΕΥΡΩ

Στη Λάρισα σήμερα στις δέκα (10) του μηνός Απριλίου του έτους δύο χιλιάδες ένα (2001), ημέρα Τρίτη και στο Συμβολαιογραφείο μου, ιδιοκτησίας Φωτίου Ρομοσιού, που βρίσκεται στην οδό Σκαρλάτου Σούτσου, αριθμ. 6, ενώπιον εμού της Συμβολαιογράφου Λάρισας ΕΛΕΝΗΣ - ΕΥΓΕΝΙΑΣ ΡΟΜΟΣΙΟΥ - ΚΛΕΙΤΣΑΚΗ, κατοίκου Λάρισας, όπου έχω και την έδρα μου, εμφανίστηκαν οι γνωστοί σε μένα και μη εξαιρούμενοι από το νόμο 1) Απόστολος Καρκανιάς του Γεωργίου και της Βασιλικής, χημικός, που γεννήθηκε στα Φάρσαλα και κατοικεί στη Λάρισα, οδός Φαρμάκη, αριθμ. 3, (ταυτότητά του Ε.697569/1985 Τ.Α. Λάρισας) και με ΑΦΜ 021894692 της Β' Δ.Ο.Υ. Λάρισαςκαι 2) Σταματία

"Intertranslations Ltd"
Intertranslations Translations Single Member
Limited Liability Company
Translation Services, Internet Services, Document Data Processing
4 El. Venizelou Street, Kallithea, Greece 17676
VAT No: EL095730866, Tax Office: A' KALLITHEA
Tel: +30 210 922 5000

GEORGIOS KARKANIAS
PRESIDENT

03/12/18

σύζυγος Αποστόλου Καρκανιά, το γένος Χρήστου και Ελένης Τσολάκη, τεχνολόγος-μηχανολόγος, που γεννήθηκε στην Καλλιπεύκη Τυρνάβου και κατοικεί στη Λάρισα, οδός Φαρμάκη, αριθμ. 3, (ταυτότητά της Ξ.697568/1985 Τ.Α. Λάρισας) και με ΑΦΜ 063983574 της Β' Δ.Ο.Υ. Λάρισας και ζήτησαν τη σύνταξη του παρόντος και δήλωσαν τα εξής: Δυνάμει του υπ' αριθμ. 28340/10-12-1986 καταστατικού συμβολαίου του Συμβολαιογράφου Λάρισας Δημητρίου Παν. Ζάγουρα, που καταχωρήθηκε στα βιβλία εταιριών του Πρωτοδικείου Λάρισας με αύξοντα αριθμό 91/19-12-1986 και δημοσιεύθηκε στο υπ' αριθμ. 3418/29-12-1986 Φ.Ε.Κ. (Δελτίο Α.Ε. και Ε.Π.Ε.), συνεστήθη μεταξύ των εμφανισθέντων Εταιρία Περιορισμένης Ευθύνης, υπό την επωνυμία "Α.ΚΑΡΚΑΝΙΑΣ ΕΤΑΙΡΙΑ ΠΕΡΙΩΡΙΣΜΕΝΗΣ ΕΥΘΥΝΗΣ", με έδρα την πόλη της Λάρισας, με ΑΦΜ 095244711 και με εταιρικό κεφάλαιο δραχμών διακοσίων χιλιάδων (200.000), διηρημένο σε είκοσι (20) εταιρικά μερίδια, τα οποία αναλήφθηκαν από τους εταίρους και δη: Ο Απόστολος Καρκανιάς ανέλαβε δέκα πέντε (15) εταιρικά μερίδια και η Σταματία σύζυγος Αποστόλου Καρκανιά ανέλαβε πέντε (5) εταιρικά μερίδια. Στη συνέχεια με το υπ' αριθμ. 49.117/1994 συμβόλαιο του Συμβολαιογράφου Λάρισας Βασιλείου Νάνου, το οποίο καταχωρήθηκε στα βιβλία εταιρικών του Πρωτοδικείου Λάρισας υπ' αύξοντ.

"Intertranslations Ltd"
Intertranslations Translations Single Member Limited Liability Company
Translation Services, Internet Services, Document Data Processing
4 El. Venizelou Street, Kallithea, Greece 17676
VAT No: EL095730866, Tax Office: A' KALLITHEA
Tel: +30 210 922 5000

GEORGIOS KARKANIAS
PRESIDENT

08/12/18

αριθμ. 104/22-12- 1989 και δημοσιεύθηκε στο υπ' αριθμ. 107/16-1-1990 ΦΕΚ έγινε αύξηση του εταιρικού κεφαλαίου κατά έξι εκατομμύρια οκτακόσιες χιλιάδες (6.800.000), ήτοι το κεφάλαιο της εταιρίας ανήλθε στο ποσό των επτά εκατομμυρίων (7.000.000) δραχμών, διαιρούμενο σε επτακόσια (700) εταιρικά μερίδια ονομαστικής αξίας δέκα χιλιάδων (10.000) δραχμών το κάθε ένα και η συμμετοχή καθενός συμβαλλομένου ήταν α) Απόστολος Καρκανιάς με μία μερίδα συμμετοχής εκ πεντακοσίων είκοσι πέντε (525) εταιρικών μεριδίων συνολικής αξίας δραχμών 5.250.000 και β) η Σταματία σύζυγος Αποστόλου Καρκανιά δια μιας μερίδος συμμετοχής από εκατόν εβδομήντα πέντε (175) εταρικά μερίδια, συνολικής αξίας δραχμών 1.750.000. Στη συνέχεια με το υπ' αριθμ. 11.868/1994 συμβόλαιό μου, το οποίο καταχωρήθηκε στα βιβλία εταιρικών του Πρωτοδικείου Λάρισας με αύξοντα αριθμό 5/5-1-1995 και δημοσιεύθηκε στο υπ' αριθμ. 4123/1998 ΦΕΚ έγινε αύξηση του εταιρικού κεφαλαίου κατά εννέα εκατομμύρια (9.000.000) δραχμές, ήτοι το κεφάλαιο της εταιρίας ανήλθε στο ποσό των δέκα έξι εκατομμυρίων (16.000.000) δραχμών, διαιρούμενο σε χίλια εξακόσια (1.600) εταιρικά μερίδια ονομαστικής αξίας δέκα χιλιάδων (10.000) δραχμών το καθένα και η συμμετοχή καθενός συμβαλλομένου ήταν α) Απόστολος Καρκανιάς με μία μερίδα συμμετοχής εκ χιλίων διακοσίων (1.200) εταιρικών μεριδίων συνολικής αξίας δραχμών δώδεκα

"Intertranslations Ltd"
Intertranslations Translations Single Member Limited Liability Company
Translation Services, Internet Services, Document Data Processing
4 El. Venizelou Street, Kallithea, Greece 17676
VAT No: EL095730866, Tax Office: A' KALLITHEA
Tel: +30 210 922 5000

GEORGIOS KARKANIAS
PRESIDENT

03/12/18

εκατομμυρίων (12.000.000) και β) Σταματία σύζυγος Αποστόλου Καρκανιά δια μιας μερίδος συμμετοχής εκ τετρακοσίων (400) εταιρικών μεριδίων συνολικής αξίας δραχμών τεσσάρων εκατομμυρίων (4.000.000). Στη συνέχεια με το υπ' αριθμ. 12.981/1995 συμβόλαιό μου, το οποίο καταχωρήθηκε στα βιβλία εταιρικών του Πρωτοδικείου Λάρισας με αύξοντα αριθμό 80/31-8-1995 και δημοσιεύθηκε στο υπ' αριθμ. 5690/4-10-1995 ΦΕΚ Α) τροποποιήθηκε το καταστατικό και συγκεκριμένα τα άρθρα ένα (1), δύο (2), τρία (3), δέκα οκτώ (18) και δέκα εννέα (19), ώστε στην επωνυμία της εταιρίας προστέθηκε ο διακριτικός τίτλος "ΚΑΡΚΑΝΙΑΣ" και έδρα της εταιρίας ορίστηκε η Βιομηχανική Περιοχή της πόλης Λάρισας (ΒΙ.ΠΕ. Λαρίσης) και Β) έγινε αύξηση του εταιρικού κεφαλαίου κατά τριάντα τέσσερα εκατομμύρια (34.000.000) δραχμές, ήτοι το κεφάλαιο της εταιρίας ανήλθε στο ποσό των πενήντα εκατομμυρίων (50.000.000) δραχμών, διαιρούμενο σε πέντε χιλιάδες (5.000) εταιρικά μερίδια ονομαστικής αξίας δέκα χιλιάδων (10.000) δραχμών το καθένα και η συμμετοχή καθενός συμβαλλομένου ήταν α) Απόστολος Καρκανιάς με μία μερίδα συμμετοχής εκ τριών χιλιάδων επτακοσίων πενήντα (3.750) εταιρικών μεριδίων συνολικής αξίας δραχμών τριάντα επτά εκατομμυρίων πεντακοσίων χιλιάδων (37.500.000) και β) Σταματία σύζυγος

"Intertranslations Ltd"
Intertranslations Translations Single Member
Limited Liability Company
Translation Services, Internet Services, Document Data Processing
4 El. Venizelou Street, Kallithea, Greece 17676
VAT No: EL095730866, Tax Office: A' KALLITHEA
Tel: +30 210 922 5000

GEORGIOS KARKANIAS
PRESIDENT

03/12/18

Αποστόλου Καρκανιά δια μιας μερίδος συμμετοχής εκ χιλίων διακοσίων πενήντα (1.250) εταιρικών μεριδίων συνολικής αξίας δραχμών δώδεκα εκατομμυρίων πεντακοσίων χιλιάδων (12.500.000). Στη συνέχεια με την υπ' αριθμ. 17.105/6-4-1998 πράξη μου που καταχωρήθηκε στα βιβλία εταρικών του Πρωτοδικείου Λάρισας με αύξοντα αριθμό 37/7-4-1998 και δημοσιεύθηκε στο υπ' αριθμ. 1887/10-4-1998 ΦΕΚ (Τεύχος Α.Ε. και ΕΠΕ), αυξήθηκε το κεφάλαιο της άνω εταιρίας κατά εκατόν πενήντα εκατομμύρια (150.000.000) δραχμές, αποτελούμενο από δέκα πέντε χιλιάδες (15.000) εταιρικά μερίδια, ονομαστικής αξίας 10.000 δραχμών το καθένα, το οποίο προήλθε από μετρητά των ιδίων εταίρων, έτσι το κεφάλαιο της εταιρίας ανέρχεται σήμερα σε δραχμές διακόσια εκατομμύρια (200.000.000), διαιρείται σε είκοσι χιλιάδες (20.000) εταιρικά μερίδια, αξίας εκάστου δέκα χιλιάδων (10.000) δραχμών και οι εταίροι μετέχουν εις την εταιρία ως εξής: 1) Ο Απόστολος Γεωργίου Καρκανιάς δια μιας μερίδος συμμετοχής εκ δέκα πέντε χιλιάδων (15.000) εταιρικών μεριδίων, συνολικής αξίας δραχμών εκατόν πενήντα εκατομμυρίων (150.000.000) και 2) Η Σταματία σύζυγος Αποστόλου Καρκανιά δια μιας μερίδος συμμετοχής από πέντε χιλιάδες (5.000) εταιρικά μερίδια, συνολικής αξίας δραχμών πενήντα εκατομμυρίων (50.000.000).

Ότι με απόφαση της εκτάκτου Γενικής Συνελεύσεως των εταίρων της εταιρίας αυτής

"Intertranslations Ltd"
Intertranslations Translations Single Member
Limited Liability Company
Translation Services, Internet Services, Document Data Processing
4 El. Venizelou Street, Kallithea, Greece 17676
VAT No: EL095730866, Tax Office: A' KALLITHEA
Tel: +30 210 922 5000

GEORGIOS KARKANIAS
PRESIDENT

03/12/18

απεφασίσθη παμψηφεί η μετατροπή αυτής σε ανώνυμη εταιρία βάσει του Κ.Ν. 2190/1920 «περί ανωνύμων εταιριών» σε συνδυασμό και προς τις διατάξεις του Ν. 2166/1993. Το ως άνω υπ' αριθμ. 198/12-2-2001 πρακτικό της ως άνω εταιρίας προσαρτάται στο παρόν έχει ως εξής:

ΠΡΑΚΤΙΚΟ Νο 198

Εκτακτης Συνέλευσης των εταίρων της εταιρίας Α. ΚΑΡΚΑΝΙΑΣ Ε.Π.Ε.

Στη Λάρισα σήμερα την 12 του μηνός Φεβρουαρίου του έτους 2001 ημέρα της εβδομάδας Δευτέρα στα γραφεία της εταιρίας Α. ΚΑΡΚΑΝΙΑΣ Ε.Π.Ε. στη βιομηχανική περιοχή Λάρισας συνήλθαν οι εταίροι αυτής σε έκτακτη Συνέλευση.

Παρόντες ήταν οι εταίροι:

1.-Απόστολος Γ. ΚΑΡΚΑΝΙΑΣ, κάτοχος του 75% του εταιρικού κεφαλαίου.

2.-ΣΤΑΜΑΤΙΑ ΣΥΖ. ΑΠΟΣΤ. ΚΑΡΚΑΝΙΑ, κάτοχος του 25% του εταιρικού κεφαλαίου.

Διαπιστωθείσης της απαρτίας αφού παρίστανται το σύνολο των εταίρων που εκπροσωπούν το σύνολο του Εταιρικού Κεφαλαίου, η Συνέλευση θεωρεί νομότυπη την σύγκληση της και εισέρχεται στην εξέταση των θεμάτων της

"Intertranslations Ltd"
Intertranslations Translations Single Member
Limited Liability Company
Translation Services, Internet Services, Document Data Processing
4 El. Venizelou Street, Kallithea, Greece 17676
VAT No: EL095730866, Tax Office: A' KALLITHEA
Tel: +30 210 922 5000

GEORGIOS KARKANIAS
PRESIDENT

03/12/18

Ημερήσιας Διατάξεως.

ΗΜΕΡΗΣΙΑ ΔΙΑΤΑΞΗ

ΘΕΜΑ: Μετατροπή της Εταιρίας σε Ανώνυμη Εταιρία σύμφωνα με τις διατάξεις του Ν.2166/1993.

Ο Πρόεδρος της Συνέλευσης και διαχειριστής της εταιρίας κ. Απόστολος Καρκανιάς, έλαβε το λόγο και εισηγήθηκε τη μετατροπή της εταιρίας περιορισμένης ευθύνης σε Ανώνυμη εταιρία σύμφωνα με τη δυνατότητα που παρέχεται από τις διατάξεις του Ν.2166/1993, όπως ισχύει σήμερα. Η μετατροπή αυτή κρίνεται συμφέρουσα για την ανάπτυξη και διεύρυνση των εργασιών της εταιρίας και την καλή πορεία αυτής στο μέλλον.

Διεξήχθη διεξοδική συζήτηση των παρισταμένων εταίρων στην οποία αναλύθηκαν όλα τα θέματα, οι διαδικασίες που προβλέπονται από τις διατάξεις των άρθρων 1-5 του Ν.2166/1993 για την μετατροπή της εταιρίας σε Ανώνυμη εταιρία, το νομικό πλαίσιο του Ν.2190/1920 που θα διέπει την εταιρία μετά την μετατροπή της και οι προοπτικές και τα πλεονεκτήματα που θα υπάρξουν για την εταιρία στο μέλλον από αυτή την μετατροπή της σε Ανώνυμη Εταιρία. Κατόπιν των ανωτέρω η έκτακτη Γενική Συνέλευση των εταίρων ομόφωνα αποφάσισε την μετατροπή της ΕΠΕ σε Ανώνυμη Εταιρία βάσει των διατάξεων του Ν.2166/1993, όπως ισχύουν σήμερα. Η μετατροπή θα γίνει με βάση των Ισολογισμό

"Intertranslations Ltd"
Intertranslations Translations Single Member Limited Liability Company
Translation Services, Internet Services, Document Data Processing
4 El. Venizelou Street, Kallithea, Greece 17676
VAT No: EL095730868, Tax Office: A' KALLITHEA
Tel: +30 210 922 5000

GEORGIOS KARKANIAS
PRESIDENT

03/12/18

της 31-12-2000 που θα αποτελέσει και τον Ισολογισμό μετασχηματισμού. Για το σκοπό της μετατροπής εξουσιοδότησε τον διαχειριστή της εταιρίας κ. Απόστολο Καρκανιά να ορίσει Ορκωτό Ελεγκτή Λογιστή για τον έλεγχο του Ισολογισμού μετασχηματισμού της 31-12-2000 και τη χορήγηση του σχετικού πιστοποιητικού, σύμφωνα με το Ν.2166/1993.

Μη υπάρχοντος άλλου θέματος για συζήτηση, λύεται η Συνεδρίαση της Γενικής Συνελεύσεως των εταίρων αφού καθένας από αυτούς υπογράφει το παρόν πρακτικό στο βιβλίο Πρακτικών Γενικών Συνελεύσεων.

Οι εταίροι

Α.Γ. Καρκανιάς Σ.Α. Καρκανιά

Λάρισα 12-02-2001

Ο Διαχειριστής

Απόστολος Γ. Καρκανιάς

//////////////////

Στη συνέχεια οι πιο πάνω εταίροι ανέθεσαν σύμφωνα με τις διατάξεις των άρθρων 1-5 του Ν.2166/1993 τον έλεγχο των λογαριασμών του Ισολογισμού μετασχηματισμού της 31-12-2000 στον Ορκωτό Ελεγκτή Λογιστή Χρήστο Γ. Χήρα από τον οποίο συντάχθηκε η από 12-3-2001 έκθεση ελέγχου που προσαρτάται στο παρόν.

"Intertranslations Ltd"
Intertranslations Translations Single Member
Limited Liability Company
Translation Services, Internet Services, Document Data Processing
4 El. Venizelou Street, Kallithea, Greece 17676
VAT No: EL095730866, Tax Office: A' KALLITHEA
Tel: +30 210 922 5000

GEORGIOS KARKANIAS
PRESIDENT

03/12/18

Το καταστατικό της εκ μετατροπής ιδρυομένης ανωνύμου εταιρίας έχει ως εξής:

ΚΕΦΑΛΑΙΟ ΠΡΩΤΟ

ΣΥΣΤΑΣΗ - ΕΠΩΝΥΜΙΑ - ΕΔΡΑ- ΣΚΟΠΟΣ - ΔΙΑΡΚΕΙΑ

Αρθρο 1

Σύσταση - Επωνυμία

Συνιστάται ανώνυμη εταιρία με την επωνυμία «ΚΑΡΚΑΝΙΑΣ - ΤΕΧΝΟΛΟΓΙΑ ΠΕΡΙΒΑΛΛΟΝΤΟΣ ΑΝΩΝΥΜΗ ΕΤΑΙΡΙΑ» και με τον διακριτικό τίτλο «ΚΑΡΚΑΝΙΑΣ». Για τις σχέσεις της εταιρίας με την Αλλοδαπή η επωνυμία θα αποδίδεται σε πιστή μετάφραση.

Αρθρο 2

Εδρα

Εδρα της εταιρίας ορίζεται η Βιομηχανική Περιοχή της πόλης Λάρισας (ΒΙ.ΠΕ. Λάρισας) όπου υπάρχουν τα γραφεία και οι εγκαταστάσεις σε κτίριο και οικόπεδο της κυριότητάς της.

Η εταιρία έχει την δυνατότητα να ιδρύει υποκαταστήματα, Πρακτορεία, Παραρτήματα, Αντιπροσωπείες ή άλλα γραφεία σ' οποιαδήποτε πόλη της Ελλάδος ή του εξωτερικού. Οι λεπτομέρειες ίδρυσης, συγκρότησης και λειτουργίας τους καθορίζονται από το Διοικητικό Συμβούλιο.

Αρθρο 3

Σκοπός

Σκοπός της εταιρίας είναι: 1) Οι μελέτες, κατασκευές, εγκαταστάσεις συστημάτων και μηχανημάτων καθαρισμού και επεξεργασίας υγρών

"Intertranslations Ltd"
Intertranslations Translations Single Member Limited Liability Company
Translation Services, Internet Services, Document Data Processing
4 El. Venizelou Street, Kallithea, Greece 17676
VAT No: EL095730866, Tax Office: A' KALLITHEA
Tel: +30 210 922 5000

GEORGIOS KARKANIAS
PRESIDENT

03/12/18

και στερεών αποβλήτων καθώς και επεξεργασίας νερού, 2) Η εμπορία αυτών των συστημάτων, καθώς και η εισαγωγή και εξαγωγή αυτών. 3) Η ανάληψη εργολαβικώς και η εκτέλεση κάθε φύσης τεχνικών έργων και έργων προστασίας του περιβάλλοντος εν γένει, οποιουδήποτε φορέα κατασκευής, δηλαδή δημοσίων, Δημοτικών, Κοινοτικών και Ιδιωτικών φορέων στην ημεδαπή και στην αλλοδαπή. 4) Η εμπορία κάθε φύσης βιομηχανικών προϊόντων είτε ημεδαπών είτε εισαγομένων εκ της αλλοδαπής. 5) Η αντιπροσώπευση ημεδαπών ή αλλοδαπών εμπορικών οίκων και βιομηχανιών, 6) Οι κάθε φύσεως επενδύσεις, 7) Η δημιουργία, η αγορά, η μίσθωση ή εκμίσθωση, η εκμετάλλευση τουριστικών επιχειρήσεων κάθε φύσης, 8) Η αγορά οικοπέδων ή ανέγερση επ' αυτών οικοδομών και η πώληση οριζοντίων ιδιοκτησιών, 9) Η ανέγερση πολυορόφων οικοδομών με το σύστημα της αντιπαροχής, 10) Η εκτέλεση έργων αναμόρφωσης και ανάπλασης χώρων και κτισμάτων και 11) Οι εκτελέσεις έργων στερεών αποβλήτων (σκουπιδιών), Χ.Υ.Τ.Α., μονάδων ανακύκλωσης, κομποστοποίησης, ενεργειακής αξιοποίησης, αντιμετώπισης ατμοσφαιρικής ρύπανσης και τοξικών αποβλήτων, συστημάτων υψηλής τεχνολογίας (τηλεδιαχείρηση), παραγωγής και συμπαραγωγής ηλεκτρικής - θερμικής ενέργειας,

"Intertranslations Ltd"
Intertranslations Translations Single Member
Limited Liability Company
Translation Services, Internet Services, Document Data Processing
4 El. Venizelou Street, Kallithea, Greece 17675
VAT No: EL095730866, Tax Office: A' KALLITHEA
Tel: +30 210 922 5000

GEORGIOS KARKANIAS
PRESIDENT

GEORGIOS KARKANIAS
PRESIDENT

03/12/18

ανανεώσιμων πηγών ενέργειας, διαχείρησης - χρηματοδότησης έργων κοινής ωφέλειας (Δημόσια).

Αρθρο 4

Διάρκεια

Η διάρκεια της εταιρίας ορίζεται σε πενήντα (50) χρόνια αρχόμενη από την καταχώρηση στο οικείο Μητρώο Ανωνύμων Εταιριών από την αρμόδια εποπτεύουσα αρχή της διοικητικής απόφασης για την σύσταση της εταιρίας και την έγκριση του καταστατικού της και λήγουσα την αντίστοιχη ημερομηνία του έτους 2051. Με απόφαση της Γενικής Συνέλευσης των μετόχων και τροποποίηση του παρόντος άρθρου δύναται να παραταθεί ή να συντομευθεί ο χρόνος της διάρκειας της εταιρίας.

ΚΕΦΑΛΑΙΟ ΔΕΥΤΕΡΟ

ΑΡΘΡΟ 5

Μετοχικό κεφάλαιο - Μετοχές

1.- Το μετοχικό κεφάλαιο της εταιρίας ορίζει σε διακόσια εκατομμύρια (200.000.000) δραχμές ή 586.940,57 ευρώ, καταβεβλημένο ολόκληρο σύμφωνα με αυτά που ορίζει λεπτομερώς το άρθρο 35 και διαιρείται σε διακόσιες χιλιάδες (200.000) μετοχές ονομαστικής αξίας χιλίων (1.000) δραχμών της καθεμιάς ή 2,93 ευρώ.

2.- Με την επιφύλαξη της παρ. 4 του άρθρου

"Intertranslations Ltd"
Intertranslations Translations Single Member
Limited Liability Company
Translation Services, Internet Services, Document Data Processing
4 El. Venizelou Street, Kallithea, Greece 17676
VAT No: EL095730866, Tax Office: A' KALLITHEA
Tel: +30 210 922 5000

GEORGIOS KARKANIAS
PRESIDENT

03/12/18

αυτού. Κατά την διάρκεια της πρώτης πενταετίας από την σύσταση της εταιρίας, το διοικητικό συμβούλιο έχει το δικαίωμα με απόφασή του που λαμβάνεται με πλειοψηφία των δύο τρίτων (2/3) τουλάχιστον του συνόλου των μελών του:

αα) να αυξάνει το μετοχικό κεφάλαιο μερικά ή ολικά με την έκδοση νέων μετοχών, για ποσό που δεν μπορεί να υπερβεί το αρχικό μετοχικό κεφάλαιο

αβ) να εκδίδει ομολογιακό δάνειο με την έκδοση ομολογιών μετατρέψιμων σε μετοχές, για ποσό που δεν μπορεί να υπερβεί το μισό του καταβεβλημένου μετοχικού κεφαλαίου. Στην περίπτωση αυτή εφαρμόζονται οι διατάξεις των παραγράφων 2 και 3 του άρθρου 3α του Κ.Ν.2190/20 όπως ισχύει.

β) Οι πιο πάνω εξουσίες μπορούν να εκχωρούνται στο διοικητικό συμβούλιο και με απόφαση της Γενικής Συνέλευσης η οποία υπόκειται στις διατυπώσεις δημοσιότητας του άρθρου 7β του ΚΝ.2190/20 όπως ισχύει. Στην περίπτωση αυτή, το μεν μετοχικό κεφάλαιο μπορεί να αυξάνεται μέχρι το ποσό του κεφαλαίου που είναι καταβεβλημένο κατά την ημερομηνία που χορηγήθηκε στο διοικητικό συμβούλιο η εν λόγω εξουσία, το δε ύψος του ομολογιακού δανείου, δεν μπορεί να υπερβαίνει το μισό του

Limited Liability Co...
Translation Services, Internet Services, Document Data Processing
4 El. Venizelou Street, Kallithea, Greece 17673
VAT No: EL095730866, Tax Office: A' KALLITHEA
Tel: +30 210 922 5000

GEORGIOS KARKANIAS
PRESIDENT

03/12/18

καταβεβλημένου μετοχικού κεφαλαίου κατά την ίδια ημερομηνία.

γ) Οι πιο πάνω εξουσίες του διοικητικού συμβουλίου μπορούν να ανανεώνονται από τη γενική συνέλευση για χρονικό διάστημα που δεν υπερβαίνει την πενταετία για κάθε ανανέωση και η ισχύς τους αρχίζει μετά την λήξη της κάθε πενταετίας. Η απόφαση αυτή της γενικής συνέλευσης υπόκειται στις διατυπώσεις δημοσιότητας του άρθρου 7β του ΚΝ.2190/20.

3.- Με την επιφύλαξη της παρ. 4 του άρθρου αυτού η Γενική Συνέλευση εντός της πρώτης πενταετίας από την σύσταση της εταιρίας έχει το δικαίωμα, με απόφασή της, για την οποία χρειάζεται η απαρτία και η πλειοψηφία του άρθρου 14, του παρόντος να αυξάνει το εταιρικό κεφάλαιο ολικά ή μερικά, με την έκδοση νέων μετοχών μέχρι το πενταπλάσιο του αρχικά καταβεβλημένου κεφαλαίου.

4.- Εάν τα αποθεματικά της εταιρίας υπερβαίνουν το ένα τέταρτο (1/4) του καταβεβλημένου μετοχικού κεφαλαίου, τότε απαιτείται πάντα απόφαση της Γενικής συνέλευσης με την απαρτία και την πλειοψηφία του άρθρου 15 του παρόντος και ανάλογη τροποποίηση του σχετικού άρθρου.

5.- Οι αυξήσεις του κεφαλαίου που αποφασίζονται σύμφωνα με τις παρ. 2 και 3 του άρθρου αυτού δεν αποτελούν τροποποίηση του Καταστατικού.

"Intertranslations Ltd"
Intertranslations Translations Single Member
Limited Liability Company
Translation Services, Internet Services, Document Data Processing
4 El. Venizelou Street, Kallithea, Greece 17676
VAT No: EL095730866, Tax Office: A' KALLITHEA
Tel: +30 210 922 5000

GEORGIOS KARKANTAS
PRESIDENT

03/12/18

6.- Η αρμοδιότητα του Δ.Σ. να αυξάνει το μετοχικό κεφάλαιο σύμφωνα με την παρ. 2 του παρόντος άρθρου, μπορεί να ασκηθεί παράλληλα με αυτήν της Γενικής Συνέλευσης κατά την παρ. 3 του παρόντος.

Αρθρο 6

1.-Οι μετοχές της εταιρίας είναι ονομαστικές και δεσμευμένες και μεταβιβάζονται μόνο όπως παρακάτω ορίζεται, με τη σύμφωνη γνώμη του Διοικητικού Συμβουλίου και υπογράφονται από τον Πρόεδρο του Διοικητικού Συμβουλίου και ένα μέλος του οριζόμενο από αυτό, δυνάμενες να μετατραπούν σε ανώνυμες και το αντίθετο δι' αποφάσεως της Γενικής Συνελεύσεως σύμφωνα με το άρθρο 14 του παρόντος και τροποποιήσεως του παρόντος άρθρου.

Σε περίπτωση που κάποιος από τους μετόχους θελήσει να μεταβιβάσει μέρος ή το σύνολο των μετοχών του, εφ' όσον τούτο είναι επιτρεπτό κατά νόμο, είναι υποχρεωμένος να απευθύνεται πρώτα στους υπόλοιπους μετόχους και εφ' όσον δεν ενδιαφέρεται κανένας απ' αυτούς, για την αγορά, μόνο τότε θα δικαιούται να τις μεταβιβάσει σε τρίτο. Η τιμή μεταβίβασης της κάθε μετοχής, σε περίπτωση διαφωνίας μεταξύ μεταβιβάζοντος και

"Intertranslations Ltd"
Intertranslations Translations Single Member
Limited Liability Company
Translation Services, Internet Services, Document Data Processing
4 El. Venizelou Street, Kallithea, Greece 17676
VAT No: EL095730866, Tax Office: A' KALLITHEA
Tel: +30 210 922 5000

GEORGIOS KARKANIAS
PRESIDENT

03/12/18

αποκτώντος μετόχου, θα καθορίζεται από τον Πρόεδρο Πρωτοδικών Λάρισας, κατά την διαδικασία των ασφαλιστικών μέτρων και κατά της αποφάσεως αυτής δεν θα χωρεί οποιοδήποτε ένδικο μέσο.

2.- Οι μετοχές της εταιρίας είναι αδιαίρετες και αναγνωρίζεται ένας μόνος ιδιοκτήτης για κάθε μία από αυτές. Όλοι οι εξ αδιαιρέτου συγκύριοι μετοχής ή οιουδήποτε τίτλου και εκείνοι που κέκτηνται δικαιώματα επ' αυτών και αυτοί που έχουν την ψιλή κυριότητα ή την επικαρπία, δεν δύνανται να αντιπροσωπεύονται στην εταιρία πλην μόνον με ένα και το αυτό πρόσωπο όλοι. Ο αντιπρόσωπος θα ορίζεται με οποιοδήποτε νόμιμο τρόπο.

3.- Κάθε μετοχή παρέχει δικαίωμα μιας ψήφους στη Γενική Συνέλευση και δικαιώματα συμμετοχής στα κέρδη της εταιρίας και στην εταιρική περιουσία κατά τον λόγο του αριθμού των εκδιδομένων μετοχών και στο προϊόν της εκκαθαρίσεως της εταιρικής περιουσίας σε περίπτωση διαλύσεως και στη διανομή των εκάστοτε κερδών αυτής.

4.-Οι τίτλοι των μετοχών μπορούν να αντιπροσωπεύουν μία ή περισσότερες μετοχές. Τα σχετικά με την έκδοση μετοχών κανονίζονται από το Διοικητικό Συμβούλιο, επιτρέπεται Δε η έκδοση προσωρινών τίτλων.

ΚΕΦΑΛΑΙΟ ΤΡΙΤΟ

"Intertranslations Ltd"
Intertranslations Translations Singie Member Limited Liability Company
Translation Services, Internet Services, Document Data Processing
4 El. Venizelou Street, Kallithea, Greece 17676
VAT No: EL095730586, Tax Office: A' KALLITHEA
Tel: +30 210 922 5000

GEORGIOS KARKANIAS
PRESIDENT

03/12/18

ΜΕΤΟΧΟΙ

ΑΡΘΡΟ 7

Δικαιώματα μετόχων

1.- Οι μέτοχοι ασκούν τα σχετικά με την διοίκηση της εταιρίας δικαιώματα τους μόνο με τη συμμετοχή τους στη Γενική συνέλευση.

2.- Κάθε μετοχή παρέχει το δικαίωμα μιας ψήφου στη Γενική Συνέλευση.

3.- Η απόφαση του αρμοδίου οργάνου της εταιρίας για αύξηση μετοχικού κεφαλαίου ή έκδοση ομολογιακού δανείου πρέπει να αναφέρει τουλάχιστον το ποσό της αύξησης του κεφαλαίου ή το ύψος του ομολογιακού δανείου, τον τρόπο κάλυψής τους, τον αριθμό και το είδος των μετοχών ή των ομολογιών που θα εκδοθούν, την ονομαστική αξία και την τιμή διάθεσης. Σε κάθε περίπτωση αύξησης του Μετοχικού Κεφαλαίου που δεν γίνεται με εισφορά σε είδος καθώς και έκδοσης ομολογιών με δικαίωμα μετατροπής σε μετοχές, για όλο το νέο κεφάλαιο και το ομολογιακό δάνειο παρέχεται δικαίωμα προτίμησης στους κατά την εποχή της έκδοσης μετόχους της εταιρίας σύμφωνα με το λόγο της συμμετοχής τους στο κεφάλαιο. Μετά την πάροδο της προθεσμίας για την άσκηση του δικαιώματος προτίμησης που ορίζεται από το όργανο της

"Intertranslations Ltd"
Intertranslations Translations Single Member
Limited Liability Company
Translation Services, Internet Services, Document Data Processing
4 El. Venizelou Street, Kallithea, Greece 17676
VAT No: EL095730[illegible], Tax Office: [illegible] KALLITHEA
Tel: +30 210 922 8000

GEORGIOS KARKANIAS
PRESIDENT

03/12/18

εταιρίας που αποφασίζει την αύξηση και που δεν μπορεί να είναι μικρότερη από μήνα οι μετοχές που δεν αναλήφθηκαν από τους παλιούς μετόχους μπορούν να διατεθούν ελεύθερα από το Διοικητικό Συμβούλιο. Σε περίπτωση κατά την οποία το όργανο της εταιρίας που αποφάσισε την αύξηση του μετοχικού κεφαλαίου παρέλειψε να ορίσει την προθεσμία για παράταση αυτής, ορίζει με απόφασή του το Διοικητικό Συμβούλιο μέσα στο προβλεπόμενο από το άρθρο 11 του Κ.Ν.2190/20. Η πρόσκληση για την ενάσκηση του δικαιώματος προτίμησης στην οποία πρέπει να μνημονεύεται και η προθεσμία μέσα στην οποία πρέπει να ασκηθεί αυτό το δικαίωμα δημοσιεύεται στο ΦΕΚ (ΤΑΕ -ΕΠΕ). Η κατά τα ανωτέρω πρόσκληση και η προθεσμία άσκησης του δικαιώματος προτίμησης μπορούν να παραλειφθούν, εφ' όσον στην Γενική Συνέλευση παρέστησαν μέτοχοι εκπροσωπούντες το σύνολο του μετοχικού κεφαλαίου και έλαβαν γνώση της προθεσμίας που τάχθηκε για την άσκηση του δικαιώματος προτίμησης ή δήλωσαν την απόφασή τους για την υπ' αυτών άσκηση ή μη του δικαιώματος προτίμησης. Επίσης η δημοσίευση της πρόσκλησης, μπορεί να αντικατασταθεί με συστημένη «επί αποδείξει» επιστολή, εφ' όσον οι μετοχές είναι ονομαστικές στο σύνολό τους.

4.- Με τους περιορισμούς των παρ. 6 και 7 του άρθρου 13 του Κ.Ν. 2190/1920 ως ισχύει μπορεί με απόφαση της Γενικής Συνέλευσης που

"Intertranslations Ltd"
Intertranslations Translations Single Member
Limited Liability Company
Translation Services, Internet Services, Documents, Design
4 El. Venizelou Street, Kallithea, Greece
VAT No: EL095730866, Tax Office: A' KALL...
Tel: +30 210 9[illegible]

GEORGIOS KARKANIAS
PRESIDENT

03/12/18

λαμβάνεται σύμφωνα με τις διατάξεις των άρθρων 29 παρ. 3 και 4 και 31 παρ. 2 του Κ.Ν. 2190/20 όπως ισχύει μπορεί να περιορισθεί ή να καταργηθεί το ανωτέρω δικαίωμα προτίμησης.

5.-Ο τρόπος γενικά της κάλυψης και της πληρωμής της αύξησης του μετοχικού κεφαλαίου, καθώς και ο τρόπος, ο χρόνος έκδοσης των νέων μετοχών και ο αριθμός, η αξία και το είδος τους ορίζονται από το όργανο της εταιρίας, το οποίο αποφασίζει την αύξηση και που δικαιούται κατά συνέπεια να αποφασίζει την ολοκληρωτική ή μερική κάλυψη του κατ' επαύξηση εκδιδόμενου κεφαλαίου και με εισφορές σε είδος κατόπιν εκτίμησής τους από την επιτροπή του άρθρου 9 του Κ.Ν. 2190/1920.

6.- α) Μέσα στο πρώτο μήνα από την σύσταση της ανώνυμης εταιρίας, το Διοικητικό Συμβούλιο υποχρεούται να συνέλθει σε ειδική συνεδρίαση με μοναδικό θέμα ημερησίας διάταξης την πιστοποίηση καταβολής ή μη του από το καταστατικό οριζόμενου αρχικού μετοχικού κεφαλαίου.

β) Σε κάθε περίπτωση αύξησης του μετοχικού κεφαλαίου η κατά τα ανωτέρω πιστοποίηση καταβολής ή μη αυτού από το Διοικητικό Συμβούλιο, πρέπει να γίνεται εντός προθεσμίας ενός (1) μηνός από την οριοθείσα προθεσμία

"Intertranslations Ltd"
Intertranslations Translations Single Member
Limited Liability Company
Translation Services, Internet Services, Document Data Processing
4 El. Venizelou Street, Kallithea, Greece 17671
VAT No: EL095730866, Tax Office: A' KALLITHEA
Tel: +30 210 922 5000

GEORGIOS KARKANIAS
PRESIDENT

03/12/18

καταβολής του ποσού της αύξησης.

γ) Η προθεσμία καταβολής της αύξησης του κεφαλαίου δεν μπορεί να είναι μικρότερη του ενός (1) μηνός και μεγαλύτερη των τεσσάρων (4) μηνών από την ημέρα λήψης της σχετικής απόφασης από το αρμόδιο όργανο της εταιρίας.

δ) Στην περίπτωση που η αύξηση του μετοχικού κεφαλαίου συνοδεύεται από ανάλογη τροποποίηση του σχετικού περί κεφαλαίου άρθρου του καταστατικού, η προθεσμία καταβολής της αύξησης του κεφαλαίου αρχίζει από την ημέρα λήψης της σχετικής απόφασης από την Γενική Συνέλευση των μετόχων, δυνάμενη να παραταθεί από το Διοικητικό Συμβούλιο για ένα (1) ακόμη μήνα.

ε) Μέσα σε είκοσι (20) ημέρες από τη λήξη της προθεσμίας των παραγράφων 6α και 6β του παρόντος άρθρου, η εταιρία υποχρεούται να υποβάλει στο Υπουργείο Εμπορίου αντίγραφο του σχετικού πρακτικού συνεδρίασης του Διοικητικού Συμβουλίου. Αν περάσει άπρακτη η προθεσμία αυτή, στην περίπτωση καταβολής αρχικού κεφαλαίου, έχουν εφαρμογή οι διατάξεις του άρθρου 48 παρ. 1 εδ. α του Κ.Ν. 2190/1920 και στην περίπτωση αύξησης του κεφαλαίου ανακαλείται η σχετική εγκριτική απόφαση τροποποίησης του καταστατικού.

στ) Η καταβολή μετρητών για κάλυψη του αρχικού μετοχικού κεφαλαίου ή τυχόν αυξήσεων αυτού, καθώς και οι καταθέσεις μετόχων με

"Intertranslations Ltd"
Intertranslations Translations -Single Member Limited Liability Company
Translation Services, Internet Services, Document Data Processing
4 El. Venizelou Street, Kallithea, Greece 17676
VAT No: EL095730866, Tax Office: A' KALLITHEA
Tel: +30 210 922 5000

GEORGIOS KARKANIAS
PRESIDENT

03/12/18

προορισμό την μελλοντική αύξηση του μετοχικού κεφαλαίου, θα πραγματοποιείται υποχρεωτικά με κατάθεση σε λογαριασμό επ' ονόματι της εταιρίας, που θα τηρείται σε οποιαδήποτε Τράπεζα που λειτουργεί νόμιμα στην Ελλάδα.

7.- Εντός είκοσι ημερών από την λήξη των πιο πάνω προθεσμιών ο Πρόεδρος του Διοικητικού Συμβουλίου υποχρεούται να υποβάλει στην αρμόδια Δ.Ο.Υ. αντίγραφο του σχετικού πρακτικού της πιο πάνω συνεδρίασης του Διοικητικού Συμβουλίου.

Αρθρο 8

Δικαιώματα μειοψηφίας

1.- Σε κάθε περίπτωση αίτησης μετόχων, που εκπροσωπούν το ένα εικοστό (1/20 του καταβεβλημένου μετοχικού κεφαλαίου, το Διοικητικό Συμβούλιο είναι υποχρεωμένο να συγκαλεί έκτακτη Γενική Συνέλευση των μετόχων, ορίζοντας ημέρα συνεδρίασής της, που να μην απέχει περισσότερο από τριάντα (30) ημέρες από την ημέρα που επιδόθηκε η αίτηση στον Πρόεδρο του Διοικητικού Συμβουλίου. Στην αίτηση πρέπει να προσδιορίζεται με ακρίβεια το αντικείμενο της ημερησίας διάταξης .

2.- Σε περίπτωση αίτησης των μετόχων, που εκπροσωπούν το ένα εικοστό (1/20) του

"Intertranslations Ltd"
Intertranslations Translations Single Member
Limited Liability Company
Translation Services, Internet Services, Document Data Processing
4 El. Venizelou Street, Kallithea, Greece 17676
VAT No: EL095730866, Tax Office: A' KALLITHEA
Tel: +30 210 922 5000

GEORGIOS KARKANIAS
PRESIDENT

08/12/18

καταβεβλημένου μετοχικού κεφαλαίου, ο πρόεδρος της Συνέλευσης είναι υποχρεωμένος να αναβάλει για μια μόνο φορά τη λήψη αποφάσεων για όλα ή για ορισμένα θέματα τακτικής ή έκτακτης Γενικής Συνέλευσης, ορίζοντας ημέρα συνέχισης της συνεδρίασης για τη λήψη τους εκείνη που ορίζεται στην αίτηση των μετόχων, που όμως δεν μπορεί να απέχει περισσότερο από τριάντα (30) ημέρες από την ημέρα της αναβολής. Η μετ' αναβολή Γενική Συνέλευση αποτελεί συνέχιση της προηγούμενης και δεν απαιτείται η επανάληψη των διατυπώσεων δημοσίευσης της πρόσκλησης των μετόχων, σε αυτήν δε, μπορούν να μετάσχουν και νέοι μέτοχοι, τηρουμένων των διατάξεων των άρθρων 27 παράγραφος 2 και 28 του Κωδικοποιημένου Νόμου 2190/1920, όπως ισχύει.

3.- Σε περίπτωση αίτησης μετόχων, που εκπροσωπούν το ένα εικοστό (1/20) του καταβλημένου μετοχικού κεφαλαίου, η οποία πρέπει να υποβληθεί στην εταιρία πέντε (5) ολόκληρες ημέρες πριν από την τακτική Γενική Συνέλευση, το Διοικητικό Συμβούλιο είναι υποχρεωμένο:

α) Να ανακοινώσει στη Γενική Συνέλευση τα ποσά, τα οποία καταβλήθηκαν στην τελευταία διετία για οποιαδήποτε αιτία από την εταιρία σε μέλη του Διοικητικού Συμβουλίου, ή στους διευθυντές ή άλλους υπαλλήλους της καθώς και κάθε άλλη παροχή της εταιρίας στα πρόσωπα αυτά, ή κάθε άλλη σύμβαση της εταιρίας που

"Intertranslations Ltd"
Intertranslations Translations Single Member Limited Liability Company
Translation Services, Internet Services, Document Data Processing
4 El. Venizelou Street, Kallithea, Greece 17676
VAT No: EL095730866, Tax Office: A' KALLITHEA
Tel: +30 210 922 5000

GEORGIOS KARKANIAS
PRESIDENT

03/12/10

καταρτίστηκε για οποιαδήποτε αιτία με τα ίδια πρόσωπα.

β) Να παρέχει τις συγκεκριμένες πληροφορίες που του ζητούνται σχετικά με τις υποθέσεις της εταιρίας, στο μέτρο που αυτές είναι χρήσιμες για την πραγματική εκτίμηση των θεμάτων της ημερησίας διάταξης. Το διοικητικό συμβούλιο μπορεί να αρνηθεί να δώσει τις πληροφορίες που του ζητούνται για αποχρώντα λόγο, αναγράφοντας τη σχετική αιτιολογία στα πρακτικά.

4.- Σε περίπτωση αίτησης μετόχων, που εκπροσωπούν το ένα τρίτο (1/3) του καταβλημένου μετοχικού κεφαλαίου, η οποία υποβάλλεται στην εταιρία μέσα στην προθεσμία της προηγουμένης παραγράφου και εφόσον οι μέτοχοι αυτοί δεν εκπροσωπούνται στο Διοικητικό συμβούλιο, το Διοικητικό συμβούλιο έχει υποχρέωση να δώσει σ' αυτούς κατά τη Γενική Συνέλευση ή αν προτιμάει, πριν απ' αυτή σε εκπρόσωπό τους, πληροφορίες σχετικά με την πορεία των εταιρικών υποθέσεων και την περιουσιακή κατάσταση της εταιρίας. Το Διοικητικό συμβούλιο μπορεί να αρνηθεί να δώσει τις πληροφορίες που του ζητούνται για αποχρώντα ουσιώδη λόγο, αναγράφοντας τη σχετική αιτιολογία στα πρακτικά.

"Intertranslations Ltd"
Intertranslations Translations Single Member
Limited Liability Company
Translation Services, Internet Services, Document Data Processing
4 El. Venizelou Street, Kallithea, Greece 17676
VAT No: EL095730866, Tax Office: A' KALLITHEA
Tel: +30 210 922 5000

GEORGIOS KARKANIAS
PRESIDENT

5.- Στις περιπτώσεις του δευτέρου εδαφίου της παρ. 3 και της παρ. 4 αυτού του άρθρου, οποιαδήποτε αμφισβήτηση, σχετικά με το βάσιμο ή μη της αιτιολογίας άρνησης παροχής πληροφοριών, λύνεται από το αρμόδιο Μονομελές Πρωτοδικείο της έδρας της εταιρίας με την διαδικασία των ασφαλιστικών μέτρων. Με την ίδια απόφαση το Δικαστήριο υποχρεώνει και την εταιρία να παράσχει τις πληροφορίες που αρνήθηκε.

6.- Σε περίπτωση αίτησης μετόχων, που εκπροσωπούν το ένα εικοστό (1/20) του καταβλημένου Μετοχικού Κεφαλαίου η λήψη απόφασης για οποιοδήποτε θέμα της ημερήσιας διάταξης της Γενικής συνέλευσης γίνεται με ονομαστική κλήση.

7.- Οι μέτοχοι που ασκούν τα δικαιώματα του άρθρου αυτού, οφείλουν να έχουν καταθέσει σύμφωνα με το άρθρο 12 του παρόντος καταστατικού τις μετοχές που τους παρέχουν τα δικαιώματα αυτά και να τις τηρούν έτσι από τη χρονολογία της επίδοσης της αίτησής τους και: α) στις περιπτώσεις των παρ. 1 και 4 του παρόντος άρθρου μέχρι την ημέρα της συνεδρίασης της Γενικής συνέλευσης, β) Στις περιπτώσεις της παρ. 5 του παρόντος άρθρου μέχρι την έκδοση της απόφασης του αρμοδίου Δικαστηρίου.

8.- Οι μέτοχοι της εταιρίας που εκπροσωπούν το ένα εικοστό (1/20) του καταβλημένου

"Intertranslations Ltd"
Intertranslations Translations Single Member
Limited Liability Company
Translation Services, Internet Services, Document Data Processing
4 El. Venizelou Street, Kallithea, Greece 17676
VAT No: EL095730866, Tax Office: A' KALLITHEA
Tel: +30 210 922 5000

GEORGIOS KARKANIAS
PRESIDENT

03/12/18

μετοχικού κεφαλαίου, έχουν δικαίωμα να ζητούν έλεγχο της εταιρίας από το Μονομελές Πρωτοδικείο της περιφέρειας στην οποία εδρεύει η εταιρία που δικάζει κατά την διαδικασία της εκούσιας δικαιοδοσίας. Ελεγχος διατάσσεται αν πιθανολογείται, ότι με τις πράξεις που καταγγέλλονται, παραβιάζονται διατάξεις των νόμων ή του Καταστατικού της εταιρίας ή των αποφάσεων της Γενικής Συνέλευσης. Οι πράξεις που καταγγέλλονται πρέπει να έχουν γίνει σε χρόνο που δεν υπερβαίνει τη διετία από την χρονολογία της έγκρισης των ετησίων οικονομικών καταστάσεων της χρήσης μέσα στην οποία τελέστηκαν.

9.- Μέτοχοι της εταιρίας που εκπροσωπούν το ένα τρίτο (1/3) του καταβλημένου μετοχικού κεφαλαίου, έχουν το δικαίωμα να ζητήσουν έλεγχο από το κατά την προηγούμενη παράγραφο αρμόδιο Δικαστήριο, εφόσον από την όλη πορεία των εταιρικών υποθέσεων γίνεται πιστευτό ότι η διοίκηση των εταιρικών υποθέσεων δεν ασκείται όπως επιβάλλει η χρηστή και συνετή διαχείριση. Η διάταξη αυτή δεν εφαρμόζεται όσες φορές η μειοψηφία που ζητά τον έλεγχο, εκπροσωπείται στο Διοικητικό συμβούλιο της εταιρίας.

10.- Οι μέτοχοι που ασκούν το δικαίωμα των

"Intertranslations Ltd"
Intertranslations Translations Single Member
Limited Liability Company
Translation Services, Internet Services, Document Data Processing
4 El. Venizelou Street, Kallithea, Greece 17676
VAT No: EL095730866, Tax Office: A' KALLITHEA
Tel: +30 210 922 5000

GEORGIOS KARKANIAS
PRESIDENT

03/12/18

παραπάνω παρ. 8 και 9 πρέπει να τηρούν σε κατάθεση τις μετοχές που τους παρέχουν το δικαίωμα αυτό, στο Ταμείο Παρακαταθηκών και Δανείων ή στην Τράπεζα της Ελλάδος ή σε άλλη αναγνωρισμένη Ελληνική Τράπεζα, μέχρι να εκδοθεί απόφαση, πάντα όμως για χρονικό διάστημα όχι μικρότερο των τριάντα (30) ημερών από την υποβολή της αίτησης.

ΚΕΦΑΛΑΙΟ ΤΕΤΑΡΤΟ

ΓΕΝΙΚΗ ΣΥΝΕΛΕΥΣΗ

Άρθρο 9

Αρμοδιότητα Γενικής Συνέλευσης

1.- Η Γενική Συνέλευση των μετόχων της εταιρίας είναι το ανώτατο όργανό της και δικαιούται να αποφασίζει για κάθε υπόθεση που αφορά της εταιρία. Οι νόμιμες αποφάσεις της δεσμεύουν και τους μετόχους που απουσιάζουν ή διαφωνούν.

2.- Η Γενική Συνέλευση είναι η μόνη αρμόδια να αποφασίζει για:

α) Παράταση της διάρκειας, διάσπαση, μετατροπή, αναβίωση, συγχώνευση ή διάλυση της εταιρίας.

β) Τροποποίηση του Καταστατικού.

γ) Αύξηση ή μείωση του Μετοχικού Κεφαλαίου, εκτός από την περίπτωση της παρ. 2 και 3 του άρθρου 5 του παρόντος, αποφασιζόμενος αυξήσεις από το Διοικητικό Συμβούλιο ή τη Γενική συνέλευση καθώς και οι επιβαλλόμενες από τις

"Intertranslations Ltd"
Intertranslations Translations Single Member
Limited Liability Company
Translation Services, Internet Services, Document Data Processing
4 El. Venizelou Street, Kallithea, Greece 17676
VAT No: EL095730865, Tax Office: A' KALLITHEA
Tel: +30 210 922 5000

GEORGIOS KARKANIAS
PRESIDENT

23/12/18

διατάξεις άλλων Νόμων.

δ) Εκδοση δανείου με ομολογίες εκτός από την περίπτωση της παρ. 2 του άρθρου 5 του παρόντος.

ε) Εκλογή μελών του Διοικητικού Συμβουλίου, εκτός από τις περιπτώσεις του άρθρου 22 και 36 του παρόντος.

στ) Εκλογή ελεγκτών.

ζ) Διορισμό εκκαθαριστών.

η) Διάθεση κερδών.

θ) Εγκριση των ετήσιων οικονομικών καταστάσεων.

3.- Στην ανωτέρω παρ. 2 δεν υπάγεται η κατά το άρθρο 78 του Κ.Ν. 2190/20 απορρόφηση της ανώνυμης εταιρίας από άλλη ανώνυμη εταιρία που κατέχει το 100% των μετοχών της.

Αρθρο 10

Σύγκληση Γενικής Συνέλευσης

1.- Η Γενική συνέλευση των μετόχων, συγκαλείται από το Διοικητικό συμβούλιο και συνέρχεται τακτικά στην έδρα της εταιρίας τουλάχιστον μια φορά το χρόνο, πάντοτε μέσα στο πρώτο εξάμηνο από τη λήξη κάθε εταιρικής χρήσης και εξαιρετικά και εκτός της έδρας τηρουμένων των διατάξεων του άρθρου 25 του Κ.Ν. 2190/20, όπως τροποποιήθηκε και ισχύει. Το Διοικητικό

"Intertranslations Ltd"
Intertranslations Translations Single Member
Limited Liability Company
Translation Services, Internet Services, Document Data Processing
4 El. Venizelou Street, Kallithea, Greece 17676
VAT No: EL095730666, Tax Office: A' KALLITHEA
Tel: +30 210 922 5000

GEORGIOS KARKANIAS
PRESIDENT

03/12/18

Συμβούλιο μπορεί να συγκαλεί σε έκτακτη συνεδρίαση τη Γενική Συνέλευση των μετόχων όταν το κρίνει σκόπιμο.

2.- Η Γενική Συνέλευση με εξαίρεση τις επαναληπτικές συνελεύσεις και εκείνες που εξομοιώνονται μ' αυτές, πρέπει να καλείται είκοσι (20) τουλάχιστον ημέρες πριν από την οριζόμενη για τη συνεδρίαση της.

Διευκρινίζεται ότι συνυπολογίζονται και οι μη εργάσιμες ημέρες.

Η ημέρα της πρόσκλησης της Γενικής Συνέλευσης και η ημέρα της συνεδρίασης δεν υπολογίζονται.

3.- Μέτοχοι που εκπροσωπούν το σύνολο του καταβεβλημένου μετοχικού κεφαλαίου, μπορούν να συνέλθουν οποτεδήποτε σε έκτακτη Γενική Συνέλευση, στην έδρα της εταιρίας, χωρίς τις διατυπώσεις δημοσίευσης της πρόσκλησης και να συζητήσουν και αποφασίζουν για οποιοδήποτε θέμα της εταιρίας έστω και εάν αυτό δεν περιλαμβάνεται στην ημερήσια διάταξη, εφόσον για όλα τα ανωτέρω δεν αντιλέγει κανένας από τους μετόχους. Για την εγκυρότητα των αποφάσεων της απαιτείται η πλειοψηφία που προβλέπεται από το Νόμο και το παρόν καταστατικό.

Αρθρο 11

Πρόσκληση - Ημερήσια Διάταξη Γενικής Συνέλευσης

1.- Στην πρόσκληση των μετόχων σε Γενική Συνέλευση αναφέρονται το οίκημα που θα συνέλθει η συνέλευση, η χρονολογία και η ώρα

"Intertranslations Ltd"
Intertranslations Translations Single Member Limited Liability Company
Translation Services, Internet Services, Document Data Processing
4 El. Venizelou Street, Kallithea, Greece 17676
VAT No: EL095730866, Tax Office: A' KALLITHEA
Tel: +30 210 922 5000

GEORGIOS KARKANIAS
PRESIDENT

03/12/18

καθώς και τα θέματα της ημερήσιας διάταξης με σαφήνεια. Η πρόσκληση αυτή δημοσιεύεται προ δέκα (10) ημερών στο τεύχος Ανωνύμων Εταιριών και Εταιριών Περιορισμένης Ευθύνης της Εφημερίδας της Κυβερνήσεως και προ είκοσι (20) ημερών σε μία από της ημερήσιες πολιτικές εφημερίδες που εκδίδονται στην Αθήνα και που κατά την κρίση του Διοικητικού Συμβουλίου κυκλοφορεί ευρύτερα σε όλη τη χώρα και επιλέγεται από τις εφημερίδες του άρθρου 3 του Ν.Δ. 3757/1957 όπως ισχύει και σε μία ημερήσια οικονομολογική εφημερίδα απ' αυτές που με απόφαση του Υπουργού Ανάπτυξης θεωρούνται οικονομολογικές και τοιχοκολλάται σε εμφανή θέση του καταστήματος της εταιρίας. Εξαιρετικά αν η εταιρία εδρεύει σε δήμο ή κοινότητα εκτός του νομού Αττικής η πρόσκληση πρέπει να δημοσιεύεται και σε μία ημερήσια ή εβδομαδιαία τουλάχιστον εφημερίδα από εκείνες που εκδίδονται στην περιοχή της έδρας της και σε περίπτωση που δεν εκδίδεται εφημερίδα στην περιοχή αυτή σε μία ημερήσια ή εβδομαδιαία τουλάχιστον εφημερίδα από τις εκδιδόμενες στην έδρα της Νομαρχίας στην οποία η εταιρία υπάγεται σύμφωνα με το Ν.2741/99. Στις περιπτώσεις επαναληπτικών γενικών Συνελεύσεων κι εκείνες που εξομοιώνονται

"Intertranslations Ltd"
Intertranslations Translations Single Member
Limited Liability Company
Translation Services, Internet Services, Document Data Processing
4 El. Venizelou Street, Kallithea, Greece 17676
VAT No: EL095730866, Tax Office: A' KALLITHEA
Tel: +30 210 922 5000

GEORGIOS KARKANIAS
PRESIDENT

03/12/18

μ' αυτές οι παραπάνω προθεσμίες συντέμνονται στο μισό.

2.- Το Διοικητικό συμβούλιο της εταιρίας έχει την υποχρέωση δέκα (10) ημέρες πριν από την τακτική Γενική Συνέλευση να δίνει σε κάθε μέτοχο που το ζητάει τις ετήσιες οικονομικές καταστάσεις της και αντίτυπο της έκθεσης του Διοικητικού Συμβουλίου καθώς και της έκθεσης των ελεγκτών πάνω σ' αυτήν.

Αρθρο 12

Κατάθεση Μετοχών - Αντιπροσώπευση

1.- Οι μέτοχοι που επιθυμούν να πάρουν μέρος στη Γενική Συνέλευση, οφείλουν να καταθέσουν τους τίτλους των μετοχών τους στο ταμείο της εταιρίας ή στο ταμείο Παρακαταθηκών και Δανείων ή σε οποιαδήποτε Τράπεζα της Ελλάδος, τουλάχιστον πέντε (5) ολόκληρες ημέρες πριν από εκείνη, για την οποία ορίστηκε η συνεδρίαση της συνέλευσης.

2.- Οι μέτοχοι που έχουν δικαίωμα συμμετοχής στη Γενική συνέλευση μπορούν ν' αντιπροσωπευθούν σ' αυτή από πρόσωπο που έχουν εξουσιοδοτήσει.

3.- Οι αποδείξεις κατάθεσης των μετοχών καθώς και τα έγγραφα νομιμοποίησης αντιπροσώπων των μετόχων, πρέπει να κατατίθενται στην εταιρία τουλάχιστον πέντε (5) ολόκληρες ημέρες πριν από τη συνεδρίαση της Γενικής Συνέλευσης.

4.- Μέτοχοι που δεν έχουν συμμορφωθεί με τις διατάξεις των παρ. 1 και 3 του άρθρου αυτού,

"Intertranslations Ltd"
Intertranslations Translations Single Member
Limited Liability Company
Translation Services, Internet Services, Document Data Processing
4 El. Venizelou Street, Kallithea, Greece 17676
VAT No: EL095730866, Tax Office: A' KALLITHEA
Tel: +30 210 922 5000

GEORGIOS KARKANIAS
PRESIDENT

05/12/18

μπορούν να πάρουν μέρος στη Γενική Συνέλευση μόνο μετά από προηγούμενη άδειά της.

Αρθρο 13

Πίνακας των μετόχων που έχουν δικαίωμα ψήφου σαράντα οκτώ (48) ώρες πριν από κάθε Γενική Συνέλευση, τοιχοκολλάται σε εμφανή θέση του καταστήματος της εταιρίας. Ο πίνακας αυτός πρέπει να περιέχει όλα τα στοιχεία που αξιώνει ο νόμος, όπως τις ενδείξεις των τυχόν αντιπροσώπων των μετόχων, τον αριθμό των μετοχών και ψήφων του καθενός και τις διευθύνσεις των μετόχων και των αντιπροσώπων τους.

Αρθρο 14

Απλή απαρτία και Πλειοψηφία Γενικής Συνέλευσης

1.- Η Γενική Συνέλευση βρίσκεται σε απαρτία και συνεδριάζει εγκύρως για τα θέματα της ημερήσιας διάταξης, όταν εκπροσωπείται σ' αυτήν τουλάχιστον το 20% του καταβλημένου μετοχικού κεφαλαίου.

2.- Εάν δεν συντελεστεί τέτοια απαρτία στην πρώτη συνεδρίαση, συνέρχεται επαναληπτική συνέλευση μέσα σε είκοσι (20) ημέρες από τη χρονολογία της συνεδρίασης που ματαιώθηκε, με

"Intertranslations Ltd"
Intertranslations Translations Single Member
Limited Liability Company
Translation Services, Internet Services, Document Data Processing
4 El. Venizelou Street, Kallithea, Greece 17676
VAT No: EL095730866, Tax Office: A' KALLITHEA
Tel: +30 210 922 5000

GEORGIOS KARKANIAS
PRESIDENT

03/12/18

πρόσκληση δέκα (10) ημέρες τουλάχιστον πριν. Η επαναληπτική αυτή συνεδρίαση βρίσκεται σε απαρτία και συνεδριάζει εγκύρως για τα θέματα της αρχικής ημερήσιας διάταξης, οποιοιδήποτε και αν είναι το τμήμα του καταβλημένου μετοχικού κεφαλαίου που εκπροσωπείται σ' αυτή.

3.- Οι αποφάσεις της Γενικής συνέλευσης παίρνονται με απόλυτη πλειοψηφία των ψήφων που εκπροσωπούνται στη συνέλευση.

Αρθρο 15

Εξαιρετική απαρτία και πλειοψηφία Γενικής Συνέλευσης

1.- Εξαιρετικά η Γενική συνέλευση βρίσκεται σε απαρτία και συνεδριάζει εγκύρως επί των θεμάτων της ημερήσιας διάταξης, εάν εκπροσωπούνται σ' αυτή τα δύο τρίτα (2/3) του καταβλημένου μετοχικού κεφαλαίου, όταν πρόκειται για αποφάσεις που αφορούν:

α) παράταση της διάρκειας, διάσπαση, μετατροπή, αναβίωση, συγχώνευση ή διάλυση της εταιρίας.

β) Μεταβολή της εθνικότητας της εταιρίας.

γ) Μεταβολή του αντικειμένου της επιχειρήσεως της εταιρίας.

δ) Αύξηση ή μείωση του μετοχικού κεφαλαίου, με εξαίρεση τις αυξήσεις του άρθρου 5 παρ. 2 και 3 του παρόντος και τις επιβαλλόμενες από διατάξεις άλλων νόμων ή γενόμενη με κεφαλαιοποίηση αποθεματικών.

ε) Εκδοση δανείου με ομολογίες, σύμφωνα με το

"Intertranslations Ltd"
Intertranslations Translations Single Member Limited Liability Company
Translation Services, Internet Services, Document Data Processing
4 El. Venizelou Street, Kallithea, Greece 17676
VAT No: EL095730886, Tax Office: A' KALLITHEA
Tel: +30 210 922 5000

GEORGIOS KARKANIAS
PRESIDENT

03/12/18

άρθρο 13 παρ. 1 του Κ.Ν. 2190/20.

στ) Μεταβολή του τρόπου διάθεσης των κερδών.

ζ) Αύξηση των υποχρεώσεων των μετόχων και η παροχή ανανέωσης εξουσιοδότησης στο Διοικητικό συμβούλιο για αύξηση μετοχικού κεφαλαίου ή έκδοση ομολογιακού δανείου.

η) σε κάθε άλλη περίπτωση που ο νόμος ορίζει.

2.- Αν δεν συντελεστεί η απαρτία της προηγουμένης παραγράφου, στην πρώτη συνεδρίαση μέσα σε είκοσι (20) ημέρες από την συνεδρίαση αυτή και ύστερα από πρόσκληση πριν δέκα (10) τουλάχιστον ημέρες, συνέρχεται η πρώτη επαναληπτική συνέλευση, που βρίσκεται σε απαρτία και συνεδριάζει έγκυρα για τα θέματα της αρχικής ημερήσιας διάταξης, όταν εκπροσωπείται σ' αυτήν το ένα δεύτερο (1/2) τουλάχιστον του καταβλημένου μετοχικού κεφαλαίου.

3.- Αν δεν συντελεστεί και αυτή η απαρτία, συνέρχεται πάλι μέσα σε είκοσι (20) ημέρες επαναληπτική συνέλευση, με πρόσκληση τουλάχιστον δέκα (10) ημέρες πριν, που βρίσκεται σε απαρτία και συνεδριάζει έγκυρα για τα θέματα της αρχικής ημερήσιας διάταξης, όταν εκπροσωπείται σ' αυτήν το ένα τρίτο (1/3) τουλάχιστον του καταβλημένου μετοχικού κεφαλαίου.

"Intertranslations Ltd"
Intertranslations Translations Single Member Limited Liability Company
Translation Services, Internet Services, Document Data Processing
4 El. Venizelou Street, Kallithea, Greece 17676
VAT No: EL095730866, Tax Office: A' KALLITHEA
Tel: +30 210 922 5000

GEORGIOS KARKANIAS
PRESIDENT

03/12/18

4.- Ολες οι αποφάσεις της παρ. 1 του παρόντος άρθρου παίρνονται με πλειοψηφία των δύο τρίτων (2/3) των ψήφων που εκπροσωπούνται στην συνέλευση.

Αρθρο 16

Πρόεδρος - Γραμματέας Γενικής Συνέλευσης

1.- Στη Γενική Συνέλευση προεδρεύει προσωρινά ο Πρόεδρος του Διοικητικού Συμβουλίου, ή αν κωλύεται αυτός, ο αναπληρωτής του. Χρέη γραμματέα εκτελεί προσωρινά αυτός που ορίζεται από τον Πρόεδρο.

2.- Αφού εγκριθεί ο κατάλογος των μετόχων που έχουν δικαίωμα ψήφου, η συνέλευση προχωρεί στην εκλογή του Προέδρου της και ενός Γραμματέα που εκτελεί και χρέη ψηφοσυλλέκτη.

Αρθρο 17

Θέματα συζήτησης -Πρακτικά Γενικής Συνέλευσης.

1.- Οι συζητήσεις και οι αποφάσεις της Γενικής συνέλευσης καθορίζονται στα θέματα που αναγράφονται στην ημερήσια διάταξη.

2.- Για τα θέματα που συζητούνται και αποφασίζονται στη Γενική συνέλευση τηρούνται πρακτικά που υπογράφονται από τον Πρόεδρο και το Γραμματέα της.

3.- Τα αντίγραφα και τα αποσπάσματα των πρακτικών, επικυρώνονται από τον Πρόεδρο του Διοικητικού Συμβουλίου ή τον αναπληρωμή του.

4.- Η εταιρία υποχρεούται να χορηγεί στους

"Intertranslations Ltd"
Intertranslations Translations Single Member
Limited Liability Company
Translation Services, Internet Services, Document Data Processing
4 El. Venizelou Street, Kallithea, Greece 17676
VAT No: EL095730866, Tax Office: A' KALLITHEA
Tel: +30 210 922 5000

GEORGIOS KARKANIAS
PRESIDENT

03/12/18

μετόχους της αντίγραφα πρακτικών γενικών συνελεύσεων. Οι μέτοχοι στους οποίους η εταιρία αρνείται να χορηγήσει αντίγραφα των πρακτικών της γενικής συνέλευσης, μπορούν να απευθυνθούν στην αρμόδια διοικητική αρχή, όπου τηρείται ο φάκελος της εταιρίας, η οποία υποχρεούται να τους χορηγήσει τα αντίγραφα αυτά.

Αρθρο 18

Απόφαση απαλλαγής μελών του Διοικητικού Συμβουλίου και Ελεγκτών

Μετά την έγκριση των οικονομικών καταστάσεων, η Γενική συνέλευση σε ειδική ψηφοφορία που ενεργείται με ονομαστική κλήση αποφαίνεται για την απαλλαγή των μελών του Διοικητικού Συμβουλίου και των ελεγκτών από κάθε ευθύνη για αποζημίωση. Τα μέλη του Διοικητικού συμβουλίου και οι υπάλληλοι της εταιρίας ψηφίζουν μόνο με τις μετοχές τους. Η απαλλαγή του Διοικητικού Συμβουλίου είναι ανίσχυρη στις διατάξεις του άρθρου 22 α του Κ.Ν. 2190/1920.

ΚΕΦΑΛΑΙΟ ΠΕΜΠΤΟ

ΔΙΟΙΚΗΤΙΚΟ ΣΥΜΒΟΥΛΙΟ

Αρθρο 19

Σύνθεση - θητεία του Διοικητικού Συμβουλίου.

"Intertranslations Ltd"
Intertranslations Translations Single Member
Limited Liability Company
Translation Services, Internet Services, Document Data Processing
4 El. Venizelou Street, Kallithea, Greece 17676
VAT No: EL095730866, Tax Office: A' KALLITHEA
Tel: +30 210 922 5000

GEORGIOS KARKANIAS
PRESIDENT

03/12/18

1.- Η εταιρία διοικείται από το Διοικητικό συμβούλιο που αποτελείται από τρεις (3) ως επτά (7) συμβούλους.

2.- Τα μέλη του Διοικητικού Συμβουλίου εκλέγονται από την Γενική συνέλευση των μετόχων της εταιρίας για πεντάχρονη θητεία, που παρατείνεται αυτόματα μέχρι την πρώτη τακτική Γενική συνέλευση μετά τη λήξη της θητείας τους, η οποία δεν μπορεί όμως να περάσει την εξαετία.

3.- Τα μέλη του Διοικητικού συμβουλίου μπορούν να ξαναεκλεγούν.

Αρθρο 20

Εξουσία - Αρμοδιότητες Διοικητικού Συμβουλίου

1.- Το Διοικητικό Συμβούλιο έχει τη διοίκηση (διαχείριση και διάθεση) της εταιρικής περιουσίας και την εκπροσώπηση της εταιρίας. Αποφασίζει για όλα γενικά τα ζητήματα που αφορούν την εταιρία μέσα στα πλαίσια του εταιρικού σκοπού, με εξαίρεση εκείνη που σύμφωνα με το νόμο ή αυτό το καταστατικό ανήκουν στην αποκλειστική αρμοδιότητα της Γενικής συνέλευσης.

2.- Η εταιρία με την επιφύλαξη της επομένης παραγράφου αναλαμβάνει υποχρεώσεις και δεσμεύεται με την υπογραφή ενός εξουσιοδοτημένου μέλους του Διοικητικού Συμβουλίου κάτω από την εταιρική επωνυμία.

3.- Το Διοικητικό Συμβούλιο μπορεί,

"Intertranslations Ltd"
Intertranslations Translations Single Member
Limited Liability Company
Translation Services, Internet Services, Document Data Processing
4 El. Venizelou Street, Kallithea, Greece 17676
VAT No: EL095730866, Tax Office: A' KALLITHEA
Tel: +30 210 922 5000

GEORGIOS KARKANIAS
PRESIDENT

03/12/18

αποκλειστικά και μόνο εγγράφως, να αναθέτει την άσκηση όλων των εξουσιών και αρμοδιοτήτων του (εκτός από αυτές που απαιτούν συλλογική ενέργεια) καθώς και την εκπροσώπηση της εταιρίας, σε ένα ή περισσότερα πρόσωπα μέλη του ή όχι, καθορίζοντας συγχρόνως και την έκταση αυτής της ανάθεσης. Οι αρμοδιότητες του Διοικητικού Συμβουλίου είναι υπό την επιφύλαξη των άρθρων 10, 22 και 23 α του Κ.Ν. 2190/1920.

Αρθρο 21

Συγκρότηση Διοικητικού Συμβουλίου

1.- Το Διοικητικό Συμβούλιο αμέσως μετά την εκλογή του συνέρχεται και συγκροτείται σε σώμα, εκλέγοντας τον Πρόεδρο και τον Αντιπρόεδρό του.

2.- Το Διοικητικό Συμβούλιο μπορεί να εκλέγει ένα ή δύο διευθύνοντες συμβούλους από τα μέλη του και μόνο, καθορίζοντας συγχρόνως και τις αρμοδιότητές τους.

3.- Ο Πρόεδρος του Διοικητικού Συμβουλίου διευθύνει τις συνεδριάσεις. Τον πρόεδρο όταν απουσιάζει ή κωλύεται αναπληρώσει σε όλη την έκταση των αρμοδιοτήτων του ο Αντιπρόεδρος και αυτόν, όταν κωλύεται μετά από απόφαση του Διοικητικού Συμβουλίου ο Διευθύνων Σύμβουλος.

"Intertranslations Ltd"
Intertranslations Translations Single Member
Limited Liability Company
Translation Services, Internet Services, Document Data Processing
4 El. Venizelou Street, Kallithea, Greece 17676
VAT No: EL095730868, Tax Office: A' KALLITHEA
Tel: +30 210 922 5000

GEORGIOS KARKANIAS
PRESIDENT

03/12/18

Αρθρο 22

Αναπλήρωση μέλους του Διοικητικού συμβουλίου

Αν, για οποιοδήποτε λόγο, κενωθεί θέση συμβούλου, επιβάλλεται στους συμβούλους που απομένουν, εφόσον έχουν την νόμιμη απαρτία, να εκλέξουν προσωρινό αντικαταστάτη για το υπόλοιπο της θητείας του συμβούλου που αναπληρώνεται.

Η εκλογή αυτή υποβάλλεται για έγκριση στην αμέσως επομένη τακτική ή έκτακτη Γενική συνέλευση. Οι πράξεις του συμβούλου που εκλέχτηκε με αυτόν τον τρόπο θεωρούνται έγκυρες, ακόμη και αν η εκλογή του δεν εγκριθεί από την Γενική συνέλευση.

Αρθρο 23

Σύγκληση του Διοικητικού συμβουλίου

1.- Το Διοικητικό Συμβούλιο συνεδριάζει στην έδρα της εταιρίας τουλάχιστον μια φορά το μήνα.

Συγκαλείται οποτεδήποτε από τον Πρόεδρο του ή αν το ζητήσουν δύο μέλη του.

2.- Το Διοικητικό Συμβούλιο εγκύρως συνεδριάζει εκτός της έδρας του σε άλλο τόπο, είτε στην ημεδαπή είτε στην αλλοδαπή, εφόσον στη συνεδρίαση αυτή παρίστανται ή αντιπροσωπεύονται όλα τα μέλη του και κανένα δεν αντιλέγει στην πραγματοποίηση της συνεδρίασης και στη λήψη αποφάσεων.

"Intertranslations Ltd"
Intertranslations Translations Single Member
Limited Liability Company
Translation Services, Internet Services, Document Data Processing
4 El. Venizelou Street, Kallithea, Greece 17676
VAT No: EL095730868, Tax Office: A' KALLITHEA
Tel: +30 210 922 5000

GEORGIOS KARKANIAS
PRESIDENT

03/12/18

3.- Το Διοικητικό Συμβούλιο συγκαλείται από τον Πρόεδρό του, με πρόσκληση που γνωστοποιείται στα μέλη του δύο (2) τουλάχιστον εργάσιμες ημέρες πριν από τη συνεδρίαση. Στην πρόσκληση πρέπει απαραίτητα να αναγράφονται με σαφήνεια και τα θέματα της ημερήσιας διάταξης, διαφορετικά η λήψη αποφάσεων επιτρέπεται μόνο εφόσον παρίστανται ή αντιπροσωπεύονται όλα τα μέλη του Διοικητικού Συμβουλίου και κανείς δεν αντιλέγει στη λήψη αποφάσεων.

4.- Τη σύγκληση του Διοικητικού Συμβουλίου μπορεί να ζητήσουν δύο (2) εκ των μελών του, με αίτησή τους προς τον πρόεδρο αυτού, ο οποίος υποχρεούται να συγκαλέσει το Διοικητικό συμβούλιο μέσα σε προθεσμία δέκα (10) ημερών από την υποβολή της αίτησης. Σε περίπτωση άρνησης του προέδρου να συγκαλέσει το Διοικητικό Συμβούλιο μέσα στην παραπάνω προθεσμία ή εκπρόθεσμης σύγκλησής του, επιτρέπεται στα μέλη που ζήτησαν τη σύγκληση να συγκαλέσουν αυτά το Διοικητικό συμβούλιο μέσα σε προθεσμία πέντε (5) ημερών από τη λήξη του δεκαημέρου, γνωστοποιώντας τη σχετική πρόσκληση στα λοιπά μέλη του Διοικητικού συμβουλίου. Στην κατά τα ανωτέρω αίτησή τους πρέπει, με ποινή απαραδέκτου, να

"Intertranslations Ltd"
Intertranslations Translations Single Member
Limited Liability Company
Translation Services, Internet Services, Document Data Processing
4 El. Venizelou Street, Kallithea, Greece 17676
VAT No: EL095730866, Tax Office: A' KALLITHEA
Tel: +30 210 922 5000

GEORGIOS KARKANIAS
PRESIDENT

03/12/18

αναφέρονται με σαφήνεια και τα θέματα με τα οποία θα ασχοληθεί το Διοικητικό συμβούλιο.

Αρθρο 24

Αντιπροσώπευση μελών - Απαρτία - Πλειοψηφία

1.- Σύμβουλος που απουσιάζει μπορεί να εκπροσωπείται από άλλο σύμβουλο. Κάθε σύμβουλος μπορεί να εκπροσωπεί ένα μόνο σύμβουλο που απουσιάζει. Σύμβουλος που απουσιάζει συνεχώς αδικαιολόγητα πέραν των έξι (6) τακτικών συνεδριάσεων του Διοικητικού Συμβουλίου αντικαθίσταται με απόφαση του Διοικητικού Συμβουλίου σύμφωνα με τους όρους του παρόντος άρθρου.

2.- Το Διοικητικό Συμβούλιο βρίσκεται σε απαρτία και συνεδριάζει έγκυρα, όταν παραβρίσκονται αντιπροσωπεύονται σ' αυτό, το ήμισυ πλέον ενός των συμβούλων, ουδέποτε όμως ο αριθμός των παρόντων συμβούλων μπορεί να είναι μικρότερος των τριών (3). Για να βρεθεί ο αριθμός απαρτίας παραλείπεται τυχόν προκύπτον κλάσμα.

3.- Οι αποφάσεις του Διοικητικού Συμβουλίου, παίρνονται με απόλυτη πλειοψηφία των συμβούλων που είναι παρόντες και εκείνων που αντιπροσωπεύονται, εκτός από την περίπτωση της παραγράφου 2 του άρθρου 5 του παρόντος. Σε περίπτωση ισοψηφίας δεν υπερισχύει η ψήφος του Προέδρου του Δ.Σ.

"Intertranslations Ltd"
Intertranslations Translations Single Member
Limited Liability Company
Translation Services, Internet Services, Document Data Processing
4 El. Venizelou Street, Kallithea, Greece 17676
VAT No: EL095730866, Tax Office: A' KALLITHEA
Tel: +30 210 922 5000

GEORGIOS KARKANIAS
PRESIDENT

03/12/18

Αρθρο 25

Πρακτικά Διοικητικού Συμβουλίου

1.- Για τις συζητήσεις και τις αποφάσεις του Διοικητικού συμβουλίου, τηρούνται πρακτικά τα οποία υπογράφονται και επικυρώνονται από τον Πρόεδρο ή τον Αντιπρόεδρο.

3.-Αντίγραφα πρακτικών συνεδριάσεων του Διοικητικού Συμβουλίου για τα οποία υπάρχει υποχρέωση καταχώρησής τους στο μητρώο ανωνύμων εταιριών, σύμφωνα με το άρθρο 7 α του Κωδικοποιημένου Νόμου 2190/1920, υποβάλλονται στο Υπουργείο Εμπορίου, μέσα σε προθεσμία είκοσι (20) ημερών από την συνεδρίαση του Διοικητικού Συμβουλίου.

Αρθρο 26

Αποζημίωση μελών Διοικητικού Συμβουλίου

1.- Στα μέλη του Διοικητικού Συμβουλίου μπορεί να χορηγηθεί αποζημίωση που το ποσό της ορίζεται από την τακτική Γενική Συνέλευση με ειδική απόφαση.

2.- Κάθε άλλη αμοιβή ή αποζημίωση των μελών του Διοικητικού Συμβουλίου βαρύνει την εταιρία αν εγκριθεί με ειδική απόφαση της τακτικής Γενικής συνέλευσης.

3.- Οποιαδήποτε παροχή πίστωσης (δάνειο, εγγυήσεις κ.λ.π.) από την εταιρία σε μέλη

"Intertranslations Ltd"
Intertranslations Translations Single Member
Limited Liability Company
Translation Services, Internal Services, Document Data Processing
4 El. Venizelou Street, Kallithea, Greece 17676
VAT No: EL095730866, Tax Office: A' KALLITHEA
Tel: +30 210 922 5000

GEORGIOS KARKANIAS
PRESIDENT

03/12/18

του Διοικητικού Συμβουλίου, στους ιδρυτές της, σε Γενικούς Διευθυντές, Διευθυντές της ή και σε συζύγους ή άλλους συγγενείς αυτών μέχρι τρίτου βαθμού εξ αίματος ή αγχιστείας απαγορεύεται απόλυτα και είναι άκυρη. Επίσης δάνεια της εταιρίας σε τρίτους καθώς και η παροχή πιστώσεως σ' αυτούς με οποιονδήποτε τρόπο ή παροχή εγγυήσεων υπέρ αυτών με σκοπό την απόκτηση από αυτούς μετοχών της εταιρίας, απαγορεύονται απολύτως και είναι άκυρα. Για οποιαδήποτε άλλη σύμβαση μεταξύ της εταιρίας και των προσώπων αυτών χρειάζεται απαραίτητα προηγούμενη ειδική άδεια της Γενικής Συνέλευσης. Αυτό ισχύει και για τις συμβάσεις εργασίας ή εντολής, καθώς και για κάθε τροποποίησή τους.

Αρθρο 27

ΑΠΑΓΟΡΕΥΣΗ ΑΝΤΑΓΩΝΙΣΜΟΥ

1.- Απαγορεύεται στα μέλη του Διοικητικού Συμβουλίου, καθώς και στους Διευθυντές της εταιρίας, να ενεργούν κατ' επάγγελμα, χωρίς άδεια της Γενικής Συνέλευσης, για δικό τους λογαριασμό ή για λογαριασμό τρίτων, πράξεις που υπάγονται σε ένα από τους σκοπούς που επιδιώκει η εταιρία ή να μετέχουν ως ομόρρυθμοι εταίροι σε εταιρίες που επιδιώκουν τέτοιους σκοπούς.

2.- Σε περίπτωση παράβασης της παραπάνω

"Intertranslations Ltd"
Intertranslations Translations Single Member
Limited Liability Company
Translation Services, Internet Services, Document Data Processing
4 El. Venizelou Street, Kallithea, Greece 17676
VAT No: EL095730966, Tax Office: A' KALLITHEA
Tel: +30 210 922 5000

GEORGIOS KARKANIAS
PRESIDENT

03/12/18

διάταξης, η εταιρία έχει δικαίωμα για αποζημίωση σύμφωνα με το άρθρο 23 παρ. 2, 3 του Κ.Ν. 2190/1920.

ΚΕΦΑΛΑΙΟ ΕΚΤΟ

ΕΛΕΓΧΟΙ

Αρθρο 28

1.-Η τακτική Γενική Συνέλευση εκλέγει κάθε χρόνο δύο (2) τακτικούς και δύο (2) αναπληρωματικούς ελεγκτές, πτυχιούχους Ανωτάτων Σχολών που έχουν άδεια Οικονομολογικού Επαγγέλματος από το Οικονομικό Επιμελητήριο Ελλάδος, σύμφωνα με τις διατάξεις του άρθρου 2 ΠΔ.475/91 (ΦΕΚ 176 Α) και δεν μπορούν να επαναδιορίζονται για περισσότερες από πέντε χρήσεις, ορίζοντας και την αμοιβή τους.

2.- Η συνέλευση μπορεί να εκλέγει ένα μόνο τακτικό και ένα αναπληρωματικό ελεγκτή, εφόσον είναι ορκωτοί ελεγκτές. Πάντως, εφόσον γίνεται υπέρβαση των ορίων της παρ. 6 του άρθρου 42 α του Κ.Ν. 2190/1920 όπως ισχύει, η εκλογή των Ορκωτών Ελεγκτών είναι υποχρεωτική, σύμφωνα με τις σχετικές διατάξεις της νομοθεσίας που ισχύουν κάθε φορά.

3.- Μέσα σε πέντε (5) ημέρες από την συνεδρίαση της Γενικής Συνέλευσης που όρισε

"Intertranslations Ltd"
Intertranslations Translations Single Member
Limited Liability Company
Translation Services, Internet Services, Document Data Processing
4 El. Venizelou Street, Kallithea, Greece 17676
VAT No: EL095730866, Tax Office: A' KALLITHEA
Tel: +30 210 922 5000

GEORGIOS KARKANIAS
PRESIDENT

03/12/18

τους ελεγκτές πρέπει να γίνει από την εταιρία ανακοίνωση προς αυτούς του διορισμού τους, σε περίπτωση δε που δεν αποποιηθούν το διορισμό τους αυτό μέσα σε προθεσμία πέντε (5) ημερών, θεωρούνται ότι έχουν αποδεχθεί τον διορισμό και έχουν όλες τις ευθύνες και υποχρεώσεις του άρθρου 37 του Κ.Ν. 2190/1920 ως και του άρθρου 43 α παρ. 4 του ίδιου Νόμου.

ΚΕΦΑΛΑΙΟ ΕΒΔΟΜΟ

Αρθρο 29

Εταιρική χρήση

Η Εταιρική χρήση είναι δωδεκάμηνης διάρκειας, αρχίζει την 1η Ιανουαρίου και λήγει την 31η Δεκεμβρίου κάθε χρόνου. Εξαιρετικά η πρώτη εταιρική χρήση, σύμφωνα με το Ν.2166/1993 αρχίζει από την αρχή του τρέχοντος έτους (1-1-2001) και θα λήξει την 31η Δεκεμβρίου 2001.

Αρθρο 30

ΕΤΗΣΙΕΣ ΟΙΚΟΝΟΜΙΚΕΣ ΚΑΤΑΣΤΑΣΕΙΣ

1.- Στο τέλος κάθε εταιρικής χρήσης το Διοικητικό Συμβούλιο καταρτίζει τις ετήσιες οικονομικές καταστάσεις και την έκθεση διαχείρισης πάντοτε σύμφωνα με το νόμο, επομένως και σύμφωνα με τις διατάξεις των άρθρων 42α, 42β, 42γ, 42δ, 42ε, 43, 43α, 43β παρ. 1, 111, 112 όπως τροποποιήθηκαν και ισχύουν, του Κ.Ν. 2190/1920.

"Intertranslations Ltd"
Intertranslations Translations Single Member
Limited Liability Company
Translation Services, Internet Services, Document Data Processing
4 El. Venizelou Street, Kallithea, Greece 17676
VAT No: EL095730866, Tax Office: A' KALLITHEA
Tel: +30 210 922 5000

GEORGIOS KARKANIAS
PRESIDENT

03/12/18

Οι ετήσιες οικονομικές καταστάσεις (ισολογισμός) υποβάλλονται για έγκριση στην τακτική Γενική Συνέλευση και συνοδεύονται:

α) Από επεξηγηματική έκθεση του Διοικητικού συμβουλίου στην οποία αναφέρονται όλα τα καθοριζόμενα στο άρθρο 43α και 3 εδαφ. α και β του Κ.Ν. 2190/1920, ως τροποποιήθηκε από το Π.Δ. 409/86 και β)από την έκθεσητωνελεγκτών.

2.- Ο Ισολογισμός και ο λογαριασμός αποτελεσμάτων χρήσης και ο πίνακας διαθέσεως κερδών μαζί με το σχετικό πιστοποιητικό ελέγχου, όταν ο έλεγχος γίνεται από ορκωτούς ελεγκτές δημοσιεύονται είκοσι (20) ημέρες πριν από τη συνεδρίαση της Συνέλευσης σύμφωνα με αυτά που ορίζονται από το νόμο, στις εφημερίδες που μνημονεύονται στο άρθρο 43β παρ. 5 και 7β παρ. 1 εδάφιο Β του Κ.Ν. 2190/1920 όπως ισχύει.

3.- Για να εγκριθεί έγκυρα από τη Γενική Συνέλευση οι ετήσιες οικονομικές καταστάσεις πρέπει να ελεγχθούν από τους ελεγκτές της εταιρίας και να έχουν θεωρηθεί ειδικά από τρία διαφορετικά πρόσωπα ήτοι:

α) τον Πρόεδρο του Διοικητικού Συμβουλίου.

β) Τον Αντιπρόεδρο του Διοικητικού Συμβουλίου

γ) Αυτόν που διευθύνει το λογιστήριο.

Αρθρο 31

GEORGIOS KARKANIAS
PRESIDENT

"Intertranslations Ltd"
Intertranslations Translations Single Member
Limited Liability Company
Translation Services, Internet Services, Document Data Processing
4 El. Venizelou Street, Kallithea, Greece 17676
VAT No: EL095730866, Tax Office: A' KALLITHEA
Tel: +30 210 922 5000

03/12/18

Διάθεση κερδών

Με την επιφύλαξη των διατάξεων του άρθρου 44 α του Κ.Ν. 2190/1920 που προστέθηκε με το άρθρο 37 του Π.Δ. 409/1986 η διάθεση των καθαρών κερδών της εταιρίας γίνεται με τον ακόλουθο τρόπο:

α) Προηγείται η διάθεση του ποσοστού για το σχηματισμό του τακτικού αποθεματικού, όπως ορίζει ο νόμος δηλαδή για το σκοπό αυτό αφαιρείται τουλάχιστον το ένα εικοστό (1/20) των καθαρών κερδών. Όπως είναι γνωστό, σύμφωνα με το νόμο η αφαίρεση αυτή παύει να είναι υποχρεωτική, όταν αυτό φθάσει σε ποσό ίσο τουλάχιστον με το ένα τρίτο (1/3) του εταιρικού κεφαλαίου.

β) Ακολουθεί η διάθεση του ποσού που απαιτείται για την καταβολή του πρώτου μερίσματος δηλαδή ποσοστού έξι τοις εκατό (6%) τουλάχιστον του καταβλημένου μετοχικού κεφαλαίου και σύμφωνα με το άρθρο 45 του Κ.Ν. 2190/1920 σε συνδυασμό με τις διατάξεις του Κ.Ν. 148/1967, του Ν.Δ. 34/1968 και του Ν.876/1979.

γ) Η Γενική συνέλευση διαθέτει ελεύθερα το υπόλοιπο.

ΚΕΦΑΛΑΙΟ ΟΓΔΟΟ

ΔΙΑΛΥΣΗ - ΕΚΚΑΘΑΡΙΣΗ

Αρθρο 32

Λόγοι λύσης της εταιρίας

"Intertranslations Ltd"
Intertranslations Translations Single Member
Limited Liability Company
Translation Services, Internet Services, Document Data Processing
4 El. Venizelou Street, Kallithea, Greece 17676
VAT No: EL095730866, Tax Office: A' KALLITHEA
Tel: +30 210 922 5000

GEORGIOS KARKANIAS
PRESIDENT

03/12/18

1.- Η εταιρία λύνεται:

α) Μόλις περάσει ο χρόνος διάρκειάς της, εκτός αν προηγούμενα αποφασιστεί από τη Γενική Συνέλευση η παράταση της διάρκειάς της.

β) με απόφαση της Γενικής συνέλευσης

γ) Μόλις η εταιρία κηρυχθεί σε πτώχευση.

2.- Η συγκέντρωση όλων των μετοχών σε ένα πρόσωπο δεν αποτελεί λόγο για τη λύση της εταιρίας.

3.- Σε περίπτωση που το σύνολο των ιδίων κεφαλαίων της εταιρίας ως ορίζεται στο άρθρο 42γ του Κ.Ν. 2190/1920 ως τροποποιήθηκε από το Π.Δ. 409/1986 μειωθεί περισσότερο από το μισό του καταβλημένου μετοχικού κεφαλαίου, το Διοικητικό συμβούλιο έχει υποχρέωση να συγκαλέσει Γενική συνέλευση μέσα σε προθεσμία έξι (6) μηνών από τη λήξη της χρήσης για να αποφασίσει για το αν διαλυθεί η εταιρία ή αν θα υιοθετηθεί άλλο μέτρο.

Αρθρο 33

Εκκαθάριση

1.- Εκτός από την περίπτωση της πτώχευσης, τη λύση της εταιρίας ακολουθεί η εκκαθάρισή της. Στην περίπτωση του εδαφίου α της παρ. 1 του άρθρου 32 του παρόντος, το Διοικητικό

"Intertranslations Ltd"
Intertranslations Translations Single Member
Limited Liability Company
Translation Services, Internet Services, Document Data Processing
4 El. Venizelou Street, Kallithea, Greece 17676
VAT No: EL095730866, Tax Office: A' KALLITHEA
Tel: +30 210 922 5000

GEORGIOS KARKANIAS
PRESIDENT

03/12/18

Συμβούλιο εκτελεί χρέη εκκαθαριστή μέχρι να διοριστούν εκκαθαριστές από τη Γενική Συνέλευση. Στην περίπτωση του εδαφίου β της ίδιας ως άνω παραγράφου του ίδιου άρθρου η Γενική Συνέλευση με την ίδια απόφαση ορίζει και τους εκκαθαριστές. Οι εκκαθαριστές που ορίζει η Γενική συνέλευση μπορούν να είναι δύο έως τέσσερις, μέτοχοι ή όχι και ασκούν όλες τις συναφείς με την διαδικασία και τον σκοπό της εκκαθάρισης αρμοδιότητες του Διοικητικού Συμβουλίου, όπως αυτές έχουν τυχόν περιοριστεί από τη Γενική συνέλευση, με τις αποφάσεις της οποίας έχουν την υποχρέωση να συμμορφώνονται. Ο διορισμός των εκκαθαριστών συνεπάγεται αυτοδίκαια την παύση της εξουσίας των μελών του Διοικητικού Συμβουλίου.

2.- Οι εκκαθαριστές που ορίζονται από τη Γενική συνέλευση οφείλουν να συντάσσουν και να δημοσιεύουν στον τύπο και στο τεύχος Ανωνύμων Εταιριών και Εταιριών Περιορισμένης Ευθύνης της Εφημερίδας της Κυβερνήσεως ισολογισμό του οποίου αντίτυπο υποβάλλεται στην Εποπτεύουσα Αρχή της αρμόδιας Νομαρχίας. Επίσης κατά τη Διάρκεια της εκκαθάρισης οφείλουν να συντάσσουν και να δημοσιεύουν στον τύπο και στο ΦΕΚ (ΤΑΕ - ΕΠΕ) Ισολογισμό αυτής σύμφωνα με την περίπτωση ιβ του άρθρου 7 α του Κ.Ν. 2190/1920, όπως τούτο προστέθηκε με το άρθρο 7 του Π.Δ. 409/1986. Επίσης οι εκκαθαριστές πρέπει να περατώσουν χωρίς καθυστέρηση, τις εκκρεμείς

"Intertranslations Ltd"
Intertranslations Translations Single Member
Limited Liability Company
Translation Services, Internet Services, Document Data Processing
4 El. Venizelou Street, Kallithea, Greece 17676
VAT No: EL095730868, Tax Office: A' KALLITHEA
Tel: +30 210 922 5000

GEORGIOS KARKANIAS
PRESIDENT

03/12/18

υποθέσεις της εταιρίας, να μετατρέψουν σε χρήμα την εταιρική περιουσία, να εξοφλήσουν τα χρέση της και να εισπράξουν τις απαιτήσεις αυτής. Μπορούν δε να ενεργήσουν και νέες πράξεις, εφόσον με αυτές εξυπηρετούνται η εκκαθάριση και το συμφέρον της εταιρίας. Οι εκκαθαριστές μπορούν επίσης να εκποιήσουν τα ακίνητα της εταιρίας, την εταιρική επιχείρηση στο σύνολό της ή κλάδους αυτής ή μεμονωμένα πάγια στοιχεία της, αλλά μετά την πάροδο τεσσάρων (4) μηνών από τη λύση της εταιρίας, κάθε μέτοχος ή και δανειστής της μπορούν να ζητήσουν από το Μονομελές Πρωτοδικείο της έδρας της εταιρίας, το οποίο δικάζει κατά τα άρθρα 739 επ. του Κώδικα Πολιτικής Δικονομίας, να καθορίσει την κατώτερη τιμή πώλησης των ακινήτων, κλάδων ή τμημάτων ή του συνόλου της εταιρίας, η απόφαση δε αυτού δεσμεύει τους εκκαθαριστές και δεν υπόκειται σε τακτικά ή έκτακτα ένδικα μέσα.

3.- Την ίδια υποχρέωση έχουν οι εκκαθαριστές και όταν λήξει η εκκαθάριση.

4.- Η Γενική συνέλευση διατηρεί όλα τα δικαιώματά της κατά τη διάρκεια της εκκαθάρισης.

5.- Οι ισολογισμοί της εκκαθάρισης εγκρίνονται από τη Συνέλευση των Μετόχων που

"Intertranslations Ltd"
Intertranslations Translations Single Member
Limited Liability Company
Translation Services, Internet Services, Document Data Processing
4 El. Venizelou Street, Kallithea, Greece 17676
VAT No: EL095730866, Tax Office: A' KALLITHEA
Tel: +30 210 922 5000

GEORGIOS KARKANIAS
PRESIDENT

03/12/18

επίσης αποφασίζει για την απαλλαγή των εκκαθαριστών από κάθε ευθύνη.

6.- Κάθε έτος υποβάλλονται στη Γενική συνέλευση τα αποτελέσματα της εκκαθάρισης με έκθεση των αιτιών που παρεμπόδισαν την αποπεράτωση της εκκαθάρισης. Το στάδιο της εκκαθάρισης δεν μπορεί να υπερβεί την πενταετία από την ημερομηνία έναρξη της εκκαθάρισης οπότε και η εταιρία διαγράφεται από το Μητρώο Α.Ε.. Για τη συνέχιση της εκκαθάρισης πέραν της πενταετίας απαιτείται ειδική άδεια του Υπουργού Εμπορίου. Το στάδιο όμως της εκκαθάρισης δεν μπορεί σε καμμία περίπτωση να υπερβεί την δεκαετία.

ΚΕΦΑΛΑΙΟ ΕΝΑΤΟ

ΓΕΝΙΚΗ ΔΙΑΤΑΞΗ

Αρθρο 34

Το καταστατικό αυτό περιορίζεται στη ρύθμιση των αντικειμένων που αξιώνει το άρθρο 2 του Κωδ. Ν. 2190/1920. Για τα υπόλοιπα θέματα ισχύουν οι ρυθμίσεις του Κ.Ν. 2190/1920 όπως ισχύει τροποποιηθείς από το Π.Δ. 409/1986 και το Π.Δ. 498/1987 και 56/91 και το Ν.2339/95, όπως ισχύουν.

ΚΕΦΑΛΑΙΟ ΔΕΚΑΤΟ

Μεταβατικές διατάξεις

"Intertranslations Ltd"
Intertranslations Translations Single Member
Limited Liability Company
Translation Services, Internet Services, Document Data Processing
4 El. Venizelou Street, Kallithea, Greece 17676
VAT No: EL095730866, Tax Office: A' KALLITHEA
Tel: +30 210 922 5000

GEORGIOS KARKANIAS
PRESIDENT

03/12/18

Άρθρο 35

Κάλυψη και καταβολή κεφαλαίου -Κάλυψη μετοχικού κεφαλαίου

Το μετοχικό κεφάλαιο του άρθρου 5 του παρόντος της εκ μετατροπής ιδρυομένης ανωνύμου εταιρίας, από δραχμές διακόσια εκατομμύρια (200.000.000) ή 586.940,57 ευρώ, διαιρούμενο σε διακόσιες χιλιάδες (200.000) μετοχές ονομαστικής αξίας δραχμών χιλίων (1.000) ή 2,93 ευρώ της κάθε μιας το οποίο καλύπτεται με εισφορά στην εκ μετατροπής ιδρυομένη ανώνυμη εταιρία του εταιρικού κεφαλαίου της εταιρίας περιορισμένης ευθύνης με την επωνυμία «Α. ΚΑΡΚΑΝΙΑΣ ΕΤΑΙΡΙΑ ΠΕΡΙΩΡΙΣΜΕΝΗΣ ΕΥΘΥΝΗΣ», της οποίας εταιρίας περιορισμένης ευθύνης μόνοι εταίροι τυγχάνουν οι εδώ συμβαλλόμενοι και το οποίο ανέρχεται σε δραχμές διακόσια εκατομμύρια (200.000.000) ή 586.940,57 ευρώ, στο οποίο συμμετέχουν α) Ο Απόστολος Γεωργίου Καρκανιάς με δέκα πέντε χιλιάδες (5.000) εταιρικά μερίδια, συνολικής αξίας δραχμών εκατόν πενήντα εκατομμυρίων (150.000.000) ή 440.205,43 ευρώ και με ποσοστό συμμετοχής 75% και β) Η Σταματία σύζυγος Αποστόλου Καρκανιά με πέντε χιλιάδες (5.000) εταιρικά μερίδια, συνολικής αξίας

"Intertranslations Ltd"
Intertranslations Translations Single Member Limited Liability Company
Translation Services, Internet Services, Document Data Processing
4 El. Venizelou Street, Kallithea, Greece 17676
VAT No: EL095730866, Tax Office: A' KALLITHEA
Tel: +30 210 922 5000

GEORGIOS KARKANIAS
PRESIDENT

03/12/18

δραχμών πενήντα εκατομμυρίων (50.000.000) ή 146.735,14 ευρώ.

Οι εδώ συμβαλλόμενοι εταίροι της μετατρεπομένης εταιρίας περιορισμένης ευθύνης με την επωνυμία «Α.ΚΑΡΚΑΝΙΑΣ ΕΤΑΙΡΙΑ ΠΕΡΙΩΡΙΣΜΕΝΗΣ ΕΥΘΥΝΗΣ» και ιδρυτές της εκ μετατροπής ιδρυομένης ανωνύμου εταιρίας με την επωνυμία «ΚΑΡΚΑΝΙΑΣ-ΤΕΧΝΟΛΟΓΙΑ ΠΕΡΙΒΑΛΛΟΝΤΟΣ ΑΝΩΝΥΜΗ ΕΤΑΙΡΙΑ» αναλαμβάνουν το μετοχικό κεφάλαιο της ανωνύμου αυτής εταιρίας ως εξής:

Α) Ο Απόστολος Γεωργίου Καρκανιας συμμετέχων στην μετατρεπομένη εταιρία περιορισμένης ευθύνης κατά το εβδομήντα πέντε τοις εκατό (75%) του εταιρικού κεφαλαίου εισφέρει στην εκ μετατροπής ιδρυομένη ανώνυμη εταιρία το αναλογούν σ΄αυτόν εβδομήντα πέντε τοις εκατό (75%) του εταιρικού κεφαλαίου από δραχμές εκατον πενήντα εκατομμύρια (150.000.000) ή 440.205,43 ευρώ. Ετσι ο ως άνω Απόστολος Γεωργίου Καρκανιάς καλύπτει το συνολικό ποσό των δραχμών εκατόν πενήντα εκατομμυρίων (150.000.000) ή 440.205,43 ευρώ και θα λάβει εκατόν πενήντα χιλιάδες (150.000) μετοχές ονομαστικής αξίας χιλίων (1000) δραχμών ή 2,93 ευρώ της κάθε μιας και

Β) Η Σταματία σύζυγος Αποστόλου Καρκανιά συμμετέχουσα στην μετατρεπομένη εταιρία περιορισμένης ευθύνης κατά το είκοσι πέντε τοις εκατό (25%0 του εταιρικού κεφαλαίου

"Intertranslations Ltd"
Intertranslations Translations Single Member
Limited Liability Company
Translation Services, Internet Services, Document Data Processing
4 El. Venizelou Street, Kallithea, Greece 17676
VAT No: EL095730866, Tax Office: A' KALLITHEA
Tel: +30 210 922 5000

GEORGIOS KARKANIAS
PRESIDENT

03/12/18

εισφέρει στην εκ μετατροπής ιδρυομένη ανώνυμη εταιρία το αναλογούν σ΄αυτή είκοσι πέντε τοις εκατό (25%) του εταιρικού κεφαλαίου από δραχμές πενήντα εκατομμύρια (50.000.000) ή 146.735,14 ευρώ

Ετσι η ως άνω Σταματία σύζυγος Αποστόλου Καρκανιά καλύπτει το συνολικό ποσό των δραχμών πενήντα εκατομμυρίων (50.000.000) ή 146.735,14 ευρώ και θα λάβει πενήντα χιλιάδες (50.000) μετοχές ονομαστικής αξίας χιλίων (1000) δραχμών ή 2,93 ευρώ κάθε μιας.

Αρθρο 36

Σύνθεση Πρώτου Διοικητικού συμβουλίου.

Το πρώτο Διοικητικό Συμβούλιο αποτελείται από τους κ.κ. 1) Απόστολο Καρκανιά του Γεωργίου και της Βασιλικής, χημικό, που γεννήθηκε στα Φάρσαλα και κατοικεί στη Λάρισα, οδός Φαρμάκη, αριθμ. 3, (ταυτότητά του Ξ.697569/1985 Τ.Α. Λάρισας) και με ΑΦΜ 021894692 της Β' Δ.Ο.Υ. Λάρισας, ως Πρόεδρο και 2) Σταματία σύζυγο Αποστόλου Καρκανιά, το γένος Χρήστου και Ελένης Τσολάκη, τεχνολόγο-μηχανολόγο, που γεννήθηκε στην Καλλιπεύκη Τυρνάβου και κατοικεί στη Λάρισα, οδός Φαρμάκη, αριθμ. 3, (ταυτότητά της Ξ.697568/1985 Τ.Α. Λάρισας) και με ΑΦΜ 063983574 της Β' Δ.Ο.Υ. Λάρισας ως Αντιπρόεδρο και 3) Νικόλαο Ρώμνιο του Γεωργίου και της Χριστίνας,

"Intertranslations Ltd"
Intertranslations Translations Single Member
Limited Liability Company
Translation Services, Internet Services, Document Data Processing
4 El. Venizelou Street, Kallithea, Greece 17676
VAT No: EL095730866, Tax Office: A' KALLITHEA
Tel: +30 210 922 5000

GEORGIOS KARKANIAS
PRESIDENT

03/12/18

επιχειρηματία, που γεννήθηκε το 1959 στον Τύρναβο και κατοικεί στη Λάρισα, οδός Μανωλάκη, αριθμ. 9-11, (ταυτότητά του Π.941184/12-10-1991 Τ.Α. Λάρισας) και με ΑΦΜ 042239152 της Β' Δ.Ο.Υ. Λάρισας, ως σύμβουλο, όλοι Ελληνες υπήκοοι.

Ο Πρόεδρος Απόστολος Γεωργίου Καρκανιάς και η Αντιπρόεδρος Σταματία σύζυγος Αποστόλου Καρκανιά θα εκπροσωπούν την εταιρία, είτε και οι δύο μαζί, είτε ο καθένας χωριστά και θα δεσμεύουν αυτή με μόνη την υπογραφή τους κάτω από την εταιρική επωνυμία για όλες τις πράξεις. Η θητεία του ως άνω Διοικητικού Συμβουλίου ορίζεται για πέντε (5) έτη και λήγει την 31-12-2005.

Αρθρο 37

Αδεια ανταγωνισμού

Το άρθρο 27 δεν έχει εφαρμογή στα μέλη του Πρώτου Διοικητικού Συμβουλίου του άρθρου 36 στα οποία χορηγείται ειδική άδεια να ενεργούν άμεσα ή έμμεσα πράξεις αναγόμενες στον εταιρικό σκοπό μέχρι την πρώτη Γενική συνέλευση η οποία είναι αρμόδια να δώσει ανάλογη άδεια για τον εφεξής χρόνο.

Αρθρο 38

Ελεγκτές της Πρώτης χρήσης

"Intertranslations Ltd"
Intertranslations Translations Single Member
Limited Liability Company
Translation Services, Internet Services, Document Data Processing
4 El. Venizelou Street, Kallithea, Greece 17676
VAT No: EL095730866, Tax Office: A' KALLITHEA
Tel: +30 210 922 5000

GEORGIOS KARKANIAS
PRESIDENT

03/12/18

Η εταιρία για την πρώτη εταιρική χρήση διορίζει ορκωτούς ελεγκτές α) τον Χρήστο Γεωργίου Χήρα, πτυχιούχο ΑΣΟΕΕ, γεννημένο στην Ιτέα Καρδίτσας το έτος 1959, Ελληνα υπήκοο, κάτοικο Αχαρνών Αττικής, οδός Καλογράνη 3, κάτοχο δελτίου ταυτότητας με αριθμό Ν.855382/84 του Α.Τ. Παλαμά Καρδίτσας με αριθμό Μητρώου ΣΟΕ 15241 ως τακτικό και β) την Σοφία Σταθοπούλου του Δημητρίου, πτυχιούχο ΑΣΟΕΕ, γεννημένη στον Πύργο Ηλείας το έτος 1961, Ελληνίδα υπήκοο, κάτοικο Αχαρνών Αττικής, Καλογράνη 3, κάτοχο δελτίου ταυτότητας με αριθμό Λ.289424/78 του Π.Α. Αχαρνών με αριθμό Μητρώου ΣΟΕ 14751 ως αναπληρωματικό.

Η αμοιβή τους θα καθορισθεί από το Σ.Ο.Ε.

Αρθρο 39

Η κατωτέρω αναφερομένη έκθεση ελέγχου του Ορκωτού Ελεγκτή Λογιστή Χρήστου Γ. Χήρα για την διαπίστωση της λογιστικής αξίας των περιουσιακών στοιχείων της προς μετατροπή Εταιρίας Περιορισμένης ευθύνης, βάσει του ισολογισμού μετασχηματισμού της 31.12.2000 προκειμένου αυτή να μετατραπεί σε Ανώνυμη Εταιρία, σύμφωνα με τις διατάξεις των άρθρων 1-5 του Ν.2166/1993, έχει επί λέξει ως εξής:

"Intertranslations Ltd"
Intertranslations Translations Single Member
Limited Liability Company
Translation Services, Internet Services, Document Data Processing
4 El. Venizelou Street, Kallithea, Greece 17676
VAT No: EL095730866, Tax Office: A' KALLITHEA
Tel: +30 210 922 5000

GEORGIOS KARKANTAS
PRESIDENT

03/12/18

28

2 1 1 6 0

ΟΡΚΩΤΟΣ ΕΛΕΓΚΤΗΣ ΛΟΓΙΣΤΗΣ: ΧΡΗΣΤΟΣ Γ. ΧΗΡΑΣ

Αθήνα, 12 Μαρτίου 2001

Προς
τους Διαχειριστές
της Εταιρείας Περιωρισμένης Ευθύνης
«Α. ΚΑΡΚΑΝΙΑΣ ΕΤΑΙΡΕΙΑ ΠΕΡΙΩΡΙΣΜΕΝΗΣ ΕΥΘΥΝΗΣ»
ΒΙ.ΠΕ. ΛΑΡΙΣΑΣ

ΕΚΘΕΣΗ ΕΛΕΓΧΟΥ

Για τη διαπίστωση της λογιστικής αξίας
των περιουσιακών στοιχείων της προς μετασχηματισμό
Εταιρείας Περιωρισμένης Ευθύνης
«Α. ΚΑΡΚΑΝΙΑΣ ΕΤΑΙΡΕΙΑΠΕΡΙΩΡΙΣΜΕΝΗΣ ΕΥΘΥΝΗΣ»
βάσει του Ισολογισμού μετασχηματισμού της 31.12.2000

I. ΓΕΝΙΚΑ

1. Εντολή και αντικείμενο ελέγχου

Με το από 13.2.2001 έγγραφο της «Α. ΚΑΡΚΑΝΙΑΣ ΕΤΑΙΡΕΙΑ ΠΕΡΙΩΡΙΣΜΕΝΗΣ ΕΥΘΥΝΗΣ» προς την Ανώνυμη Ελεγκτική Εταιρεία «ΣΥΝΕΡΓΑΖΟΜΕΝΟΙ ΟΡΚΩΤΟΙ ΛΟΓΙΣΤΕΣ Α.Ε.Ο.Ε.», μου ανατέθηκε ο έλεγχος των λογαριασμών του Ισολογισμού μετασχηματισμού της 31.12.2000, με σκοπό τη διαπίστωση της λογιστικής αξίας των περιουσιακών στοιχείων της ανωτέρω Εταιρείας Περιωρισμένης Ευθύνης, προκειμένου αυτή να μετασχηματισθεί (μετατραπεί) σε Ανώνυμη Εταιρεία, σύμφωνα με τις διατάξεις των άρθρων 1-5 του Ν. 2166/1993.

"Intertranslations Ltd"
Intertranslations Translations Single Member
Limited Liability Company
Translation Services, Internet Services, Document Data Processing
4 El. Venizelou Street, Kallithea, Greece 17676
VAT No: EL095730866, Tax Office: A' KALLITHEA
Tel: +30 210 922 5000

GEORGIOS KARKANIAS
PRESIDENT

03/12/18

Η παρούσα έκθεση έχει όλα εκείνα τα στοιχεία, τις πληροφορίες, τις αναλύσεις των κονδυλίων του Ισολογισμού και τις παρατηρήσεις, που συνθέτουν την εκτίμηση της Οικονομικής Κατάστασης της εταιρείας κατά την 31.12.2000 και ως εκ τούτου υπέχει και θέση Πιστοποιητικού Ειδικού Ελέγχου, για τη διαπίστωση της λογιστικής αξίας των περιουσιακών στοιχείων της εταιρείας κατά την 31.12.2000, προκειμένου να μετασχηματισθεί σύμφωνα με το Ν. 2166/1993.

Αντικείμενο του ελέγχου μας υπήρξαν τα κονδύλια του Ενεργητικού και του Παθητικού του Ισολογισμού της 31.12.2000, που προορίζονται να μεταφερθούν για τη μετατροπή της εταιρείας αυτής σε Ανώνυμη Εταιρεία.

Η αναλυτική ανάπτυξη των ανωτέρω κονδυλίων, με τις απαραίτητες πληροφορίες, τα σχόλια και τις παρατηρήσεις μας, παρατίθεται στις επόμενες σελίδες της παρούσας Έκθεσης.

2. Σύσταση – Έδρα – Διάρκεια

Με το υπ'αριθμό 28340/10.12.1986 Καταστατικό Εταιρείας Περιωρισμένης Ευθύνης του Συμβολαιογράφου Λάρισας Δημητρίου Παναγιώτου Ζάγουρα, που δημοσιεύθηκε στα βιβλία Εταιρειών Ε.Π.Ε. του Πρωτοδικείου Λάρισας με αύξ. αριθμό 91/19.12.1986 και στο ΦΕΚ 3418/29/12/1986 (τεύχος Α.Ε. και Ε.Π.Ε.), συστάθηκε Εταιρεία Περιωρισμένης Ευθύνης με την επωνυμία «Α. ΚΑΡΚΑΝΙΑΣ ΕΤΑΙΡΕΙΑ ΠΕΡΙΩΡΙΣΜΕΝΗΣ ΕΥΘΥΝΗΣ».

Έδρα της Εταιρείας, βάσει της υπ' αριθμό 12981/31.7.1995 πράξης τροποποιήσεως του Καταστατικού Εταιρείας περιωρισμένης Ευθύνης της Συμβολαιογράφου Λάρισας Ελένης – Ευγενείας Ρομοσιού – Κλειτσάκη, που καταχωρήθηκε στα βιβλία εταιρειών του Πρωτοδικείου Λάρισας με αυξ. Αριθμό 80/31.8.1995 και δημοσιεύτηκε στο ΦΕΚ 5690/4.10.1995, ορίστηκε η βιομηχανική Περιοχή Λάρισας, με διάρκεια αορίστου χρόνου η οποία αρχίζει από τη νόμιμη σύστασή της δηλ. από την 29.12.1986.

GEORGIOS KARKANIAS
PRESIDENT

"Intertranslations Ltd"
Intertranslations Translations Single Member
Limited Liability Company
Translation Services, Internet Services, Document Data Processing
4 El. Venizelou Street, Kallithea, Greece 17676
VAT No: EL095730865, Tax Office: A' KALLITHEA
Tel: +30 210 922 5000

03/12/18

3. Σκοπός της Εταιρείας

Σκοπός της Εταιρείας, βάσει της υπ'αριθμό 12981/31.7.1995 πράξης τροποποιήσεως του Καταστατικού Εταιρείας Περιωρισμένης Ευθύνης της Συμβολαιογράφου Λάρισας Ελένης – Ευγενείας Ρομοσιού - Κλειτσάκη, που καταχωρήθηκε στα βιβλία Εταιρειών του Πρωτοδικείου Λάρισας με αύξ. αριθμό 80/31.8.1995 και δημοσιεύθηκε στο ΦΕΚ 5690/4.10.1995 είναι: Οι μελέτες, κατασκευές, εγκαταστάσεις συστημάτων και μηχανημάτων καθαρισμού αποβλήτων και επεξεργασίας νερού και η εμπορία αυτών καθώς και η εισαγωγή και εξαγωγή αυτών, η ανάληψη εργολαβικώς και η εκτέλεση κάθε φύσεως τεχνικών έργων, οποιουσδήποτε φορέα κατασκευής, δηλαδή Δημοσίων, Δημοτικών, Κοινοτικών και Ιδιωτικών φορέων στην ημεδαπή, η εμπορία κάθε φύσης βιομηχανικών προϊόντων είτε ημεδαπών είτε εισαγόμενων εκ της αλλοδαπής, η αντιπροσώπευση ημεδαπών ή αλλοδαπών εμπορικών οίκων και βιομηχανιών, οι κάθε φύσεως επενδύσεις, η δημιουργία, η αγορά, η μίσθωση ή εκμίσθωση, η εκμετάλλευση τουριστικών επιχειρήσεων κάθε φύσης, η αγορά οικοπέδων ή ανέγερση επ' αυτών οικοδομών και η πώληση οριζοντίων ιδιοκτησιών, η ανέγερση πολυόροφων οικοδομών με το σύστημα της αντιπαροχής, η εκτέλεση έργων αναμόρφωσης και ανάπλασης χώρων και κτισμάτων.

4. Εταιρικό Κεφάλαιο – Εταιρικά Μερίδια – Μερίδα συμμετοχής

Το Εταιρικό Κεφάλαιο ανέρχεται κατά την 31.12.2000 στο ποσό των δρχ. 200.000.000 διαιρούμενο σε 20.000 εταιρικά μερίδια των 10.000 δρχ. έκαστο.

Η εξέλιξη του Εταιρικού Κεφαλαίου εμφανίζεται ως εξής:

ΑΙΤΙΟΛΟΓΙΑ	Φ.Ε.Κ.	ΕΤΑΙΡΟΙ		
		ΑΠΟΣΤΟΛΟΣ ΚΑΡΚΑΝΙΑΣ	ΣΤΑΜΑΤΙΑ ΚΑΡΚΑΝΙΑ	ΣΥΝΟΛΟ ΚΕΦΑΛΑΙΟΥ
Σύσταση Ε.Π.Ε.	3418/29.12.1986	150.000	50.000	200.000
Αύξηση εταιρικού κεφαλαίου	107/16.1.1990	5.100.000	1.700.000	7.000.000
Αύξηση εταιρικού κεφαλαίου	4123/18.6.1998	6.750.000	2.250.000	16.000.000
Αύξηση εταιρικού κεφαλαίου	5690/4.10.1995	25.500.000	8.500.000	50.000.000
Αύξηση εταιρικού κεφαλαίου	1887/10.4.1998	112.500.000	37.500.000	200.000.000
		150.000.000	50.000.000	200.000.000

"Intertranslations Ltd"
Intertranslations Translations Single Member
Limited Liability Company
Translation Services, Internet Services, Document Data Processing
4 El. Venizelou Street, Kallithea, Greece 17676
VAT No: EL095730666, Tax Office: A' KALLITHEA
Tel: +30 210 922 5000

GEORGIOS KARKANIAS
PRESIDENT

03/12/18

Κατόπιν των ανωτέρω, η συμμετοχή στο Εταιρικό Κεφάλαιο εμφανίζεται ως εξής:

ΕΤΑΙΡΟΙ	ΕΤΑΙΡΙΚΑ ΜΕΡΙΔΙΑ	ΑΞΙΑ ΜΕΡΙΔΙΩΝ	ΜΕΡΙΔΑ ΣΥΜ/ΧΗΣ	ΠΟΣΟΣΤΟ ΣΥΜ/ΧΗΣ
- ΑΠΟΣΤΟΛΟΣ ΓΕΩΡΓΙΟΥ ΚΑΡΚΑΝΙΑΣ	15.000	150.000.000	1	75%
- ΣΤΑΜΑΤΙΑ ΣΥΖΥΓΟΣ ΑΠΟΣΤΟΛΟΥ ΚΑΡΚΑΝΙΑ	5.000	50.000.000	1	25%
	20.000	200.000.000		100%

5. Διαχείριση και εκπροσώπηση

Τη διαχείριση των εταιρικών υποθέσεων και την εκπροσώπηση της εταιρείας έχουν αναλάβει, με την υπ'αριθμό 12981/31.7.1995 Πράξη τροποποιήσεως Καταστατικού Εταιρείας Περιωρισμένης Ευθύνης της Συμβολαιογράφου Λάρισας Ελένης – Ευγενείας Ρομοσιού – Κλειτσάκη, οι Εταίροι Απόστολος Γεωργίου Καρκανιάς και Σταματία σύζυγος Αποστόλου Καρκανιά, με θητεία αορίστου διαρκείας, ενεργούντες είτε από κοινού είτε ο καθένας χωριστά δεσμεύοντες την εταιρεία δια της υπογραφής.

6. Στοιχεία στα οποία στηρίχθηκε ο έλεγχος

Για τον ειδικό αυτό έλεγχο βασιστήκαμε:

α) Στις ελεγκτικές διαδικασίες που κρίναμε κατάλληλες, βάσει των αρχών και κανόνων ελεγκτικής που ακολουθεί το Σώμα Ορκωτών Ελεγκτών Λογιστών.

β) Στα βιβλία και στοιχεία που τήρησε η εταιρεία καθώς και στις αναγκαίες πληροφορίες και επεξηγήσεις που μας δόθηκαν.

γ) Στις έγγραφες διαβεβαιώσεις της εταιρείας ότι, όλες οι γνωστές υποχρεώσεις αυτής και το σύνολο της περιουσίας της είναι καταχωρημένα στα βιβλία της και ότι δεν υπάρχουν εκκρεμείς δίκες και ενδεχόμενες υποχρεώσεις που θα μπορούσαν να αλλοιώσουν ουσιαστικά την Οικονομική Κατάσταση της εταιρείας, εκτός από την εκκρεμοδικία κατά πελάτη για την οποία αναφερόμαστε παρακάτω στην παράγραφο II.Β.14.

GEORGIOS KARKANIAS
PRESIDENT

"Intertranslations Ltd"
Intertranslations Translations Single Member
Limited Liability Company
Translation Services, Internet Services & Document Data Processing
4 El. Venizelou Street, Kallithea, Greece 176 7
VAT No: EL095730866, Tax Office: A' KALLITHE
Tel: +30 210 922 5000

03/12/18

7. Καταχώρηση στο βιβλίο Απογραφών και Ισολογισμών

Τα στοιχεία του Ενεργητικού και του Παθητικού καθώς και οι Οικονομικές Καταστάσεις της 31.12.2000, οι οποίες εγκρίθηκαν με απόφαση της Τακτικής Συνέλευσης των Εταίρων της 2.3.2001 και δημοσιεύθηκαν στο Τεύχος Α.Ε. και Ε.Π.Ε. της Εφημερίδας της Κυβέρνησης με Κωδικό Δημοσιεύματος 13701/27.2.2001 είναι καταχωρημένα στις σελίδες 1-69 του θεωρημένου Βιβλίου Απογραφών και Ισολογισμών με αύξοντα αριθμό και ημερομηνία θεώρησης 14331/29.12.2000 της Δ.Ο.Υ Β' ΛΑΡΙΣΑΣ.

Σημειώνεται ότι, τα παρακάτω στοιχεία του Ενεργητικού αναγράφονται στο Βιβλίο Απογραφών και Ισολογισμών συγκεντρωτικά, αναλυτικά δεν είναι καταχωρημένα στο θεωρημένο βιβλίο Μητρώο Παγίων, με αριθμό και ημερομηνία θεώρησης 14332/29.12.2000της Δ.Ο.Υ. Β' ΛΑΡΙΣΑΣ.

α) Τα έξοδα εγκαταστάσεως περιγράφονται αναλυτικά στη σελίδα 11 του θεωρημένου Μητρώου Παγίων.

β) Τα Πάγια Περιουσιακά στοιχεία (Γήπεδα – Οικόπεδα, Κτίρια και Τεχνικά έργα, Μηχανήματα-Τεχνικές εγκαταστάσεις και λοιπός μηχανολογικός εξοπλισμός, Μεταφορικά μέσα, Έπιπλα και λοιπός εξοπλισμός) περιγράφονται αναλυτικά στις σελίδες 1-11 του θεωρημένου Μητρώου Παγίων.

"Intertranslations Ltd"
Intertranslations Translations Single Member
Limited Liability Company
Translation Services, Internet Services, Document Data Processing
4 El. Venizelou Street, Kallithea, Greece 17676
VAT No: EL095730366, Tax Office: A' KALLITHEA
Tel: +30 210 922 5000

GEORGIOS KARKANIAS
PRESIDENT

03/12/18

II. ΠΡΟΣΔΙΟΡΙΣΜΟΣ ΤΗΣ ΛΟΓΙΣΤΙΚΗΣ ΑΞΙΑΣ ΤΩΝ ΠΕΡΙΟΥΣΙΑΚΩΝ ΣΤΟΙΧΕΙΩΝ ΚΑΙ ΑΝΑΛΥΣΗ ΑΥΤΩΝ

Α. ΙΣΟΛΟΓΙΣΜΟΣ ΤΗΣ 31ης ΔΕΚΕΜΒΡΙΟΥ 2000

ΕΝΕΡΓΗΤΙΚΟ

		Ποσά σε δραχμές		
		Αξία κτήσεως	Αποσβέσεις	Αναπόσβεστη αξία
Β.	ΕΞΟΔΑ ΕΓΚΑΤΑΣΤΑΣΕΩΣ			
	1. Έξοδα ιδρύσεως και πρώτης εγκαταστάσεως	234.936	234.935	1
	4. Λοιπά έξοδα εγκαταστάσεως	837.520	837.519	1
		1.072.456	1.072.454	2
Γ.	ΠΑΓΙΟ ΕΝΕΡΓΗΤΙΚΟ			
	I. Ασώματες ακινητοποιήσεις			
	5. Λοιπές ασώματες ακινητοποιήσεις	700.000	699.999	1
	II. Ενσώματες Ακινητοποιήσεις			
	1. Γήπεδα-Οικόπεδα	36.121.671		36.121.671
	3. Κτίρια και τεχνικά Έργα	270.900.680	85.016.796	185.883.884
	4. Μηχανήματα - τεχνικές εγκαταστάσεις και λοιπός μηχανολογικός εξοπλισμός	84.089 200	32.896.855	51.192.345
	5. Μεταφορικά μέσα	51.636.786	25.851.479	25.785.307
	6. Έπιπλα και λοιπός εξοπλισμός	65.920.294	44.329.298	21.590.996
		508 668 631	188.094.428	320.574.203
	Σύνολο ακινητοποιήσεων (ΓΙ+ΓΙΙ)	509.368 631	188.794.427	320.574.204
	III. Συμμετοχές και άλλες μακροπρόθεσμες χρηματοοικονομικές απαιτήσεις			
	2. Συμμετοχές σε λοιπές επιχειρήσεις			510.000
	7. Λοιπές μακροπρόθεσμες απαιτήσεις			230.000
				740.000
	Σύνολο πάγιου ενεργητικού (ΓΙ+ΓΙΙ+ΓΙΙΙ)			321.314.204

"Intertranslations Ltd"
Intertranslations Translations Single Member
Limited Liability Company
Translation Services, Internet Services, Document Data Processing
4 El. Venizelou Street, Kallithea, Greece 17676
VAT No: EL095730868, Tax Office: A' KALLITHEA
Tel: +30 210 922 5000

GEORGIOS KARKANIAS
PRESIDENT

03/12/18

21160

Δ. ΚΥΚΛΟΦΟΡΟΥΝ ΕΝΕΡΓΗΤΙΚΟ	
I. Αποθέματα	
2. Προϊόντα έτοιμα & ημιτελή	1.129.000
4. Πρώτες & βοηθ. ύλες-αναλώσιμα - ανταλλακτικά	52.330.107
5. Προκαταβολές για αγορές αποθεμάτων	4.756.121
	58.215.228
II. Απαιτήσεις	
1. Πελάτες	178.479.926
3α. Επιταγές εισπρακτέες (μεταχρον.)	14.100.000
5α. Βραχυπρόθεσμες απαιτήσεις από συμμετοχές σε κοινοπραξίες	206.430.498
11. Χρεώστες διάφοροι	31.838.329
	430.848.753
IV. Διαθέσιμα	
1. Ταμείο	33.113.962
3. Καταθέσεις όψεως και προθεσμίας	11.690.738
	44.804.700
Σύνολο κυκλοφορούντος ενεργητικού (ΔI+ΔII+ΔIV)	533.868.681
ΓΕΝΙΚΟ ΣΥΝΟΛΟ ΕΝΕΡΓΗΤΙΚΟΥ (Β+Γ+Δ+Ε)	855.182.887

ΠΑΘΗΤΙΚΟ

A. ΙΔΙΑ ΚΕΦΑΛΑΙΑ	
I. Κεφάλαιο εταιρικό	
(20.000 εταιρ. μερίδια των 10.000 δρχ.)	
1. Καταβλημένο	200.000.000
III. Διαφορές αναπροσαρμογής - Επιχορηγήσεις Επενδύσεων	
2. Διαφορές από αναπροσαρμογή αξίας λοιπών περιουσιακών στοιχείων	29.066.613
3. Επιχορηγήσεις επενδύσεων πάγιου ενεργητικού	88.801.453
	117.868.066
IV. Αποθεματικά Κεφάλαια	
1. Τακτικό αποθεματικό	26.970.170
2. Ειδικά αποθεματικά	8.689.588
5. Αφορολόγητα αποθεματικά ειδικών διατάξεων νόμων	157.799.926
	193.459.684
Σύνολο ιδίων κεφαλαίων	

"Intertranslations Ltd"
Intertranslations Translations Single Member
Limited Liability Company
Translation Services, Internet Services, Document Data Processing
4 El. Venizelou Street, Kallithea, Greece 17676
VAT No: EL095730866, Tax Office: A' KALLITHEA
Tel: +30 210 922 5000

GEORGIOS KARKANIAS
PRESIDENT

03/12/18

	(AI+AIII+AIV)	511.327 750
Γ.	ΥΠΟΧΡΕΩΣΕΙΣ	
II.	Βραχυπρόθεσμες υποχρεώσεις	
	1. Προμηθευτές	43.119.355
	2. Γραμμάτια πληρωτέα	1.137.250
	2α.Επιταγές πληρωτέες (μεταχρον.)	75.871.434
	3. Τράπεζες λογαρ. Βραχυπρόθεσμων υποχρεώσεων	15.137.875
	5. Υποχρεώσεις από φόρους -τέλη	56.387.889
	6. Ασφαλιστικοί Οργανισμοί	8.594.755
	11.Πιστωτές διάφοροι	142.551.279
	Σύνολο υποχρεώσεων (ΓΙΙ)	342.799.837
Δ	ΜΕΤΑΒΑΤΙΚΟΙ ΛΟΓΑΡΙΑΣΜΟΙ ΠΑΘΗΤΙΚΟΥ	
	2. Έξοδα χρήσεως δουλευμένα	1.055.300
	ΓΕΝΙΚΟ ΣΥΝΟΛΟ ΠΑΘΗΤΙΚΟΥ (Α+Γ+Δ)	855.182.887

Β. ΑΝΑΛΥΣΗ ΚΟΝΔΥΛΙΩΝ ΙΣΟΛΟΓΙΣΜΟΥ

1. Έξοδα ιδρύσεως και πρώτης εγκαταστάσεως

	Αξία κτήσεως 31.12.2000	Δρχ.	234.936
Μείον:	Αποσβέσεις μέχρι 31.12.2000	«	234.935
	Αναπόσβεστη αξία 31.12.2000	Δρχ.	1

Η παραπάνω αξία κτήσεως αντιπροσωπεύει τα έξοδα κτήσεως οικοπέδων της εταιρείας (συμβολαιογραφικά έξοδα κ.λ.π.) και αναλύονται στη σελίδα 49 του βιβλίου Απογραφών και Ισολογισμών.

2. Λοιπά έξοδα εγκαταστάσεως

	Αξία κτήσεως 31.12.2000	Δρχ.	837.520
Μείον:	Αποσβέσεις μέχρι 31.12.2000	«	837.519
	Αναπόσβεστη αξία 31.12.2000	Δρχ.	1

Η παραπάνω αξία κτήσεως αφορά σε καταβληθέντα σε προηγούμενες χρήσεις έξοδα αυξήσεως Μετοχικού Κεφαλαίου και αναλύονται στη σελίδα 49 του βιβλίου Απογραφών και Ισολογισμών.

"Intertranslations Ltd"
Intertranslations Translations Single Member
Limited Liability Company
Translation Services, Internal Services, Document Data Processing
4 El. Venizelou Street, Kallithea, Greece 1767
AT No: EL095730858, Tax Office: ...
Tel: ... 210 922 ...

GEORGIOS KARKANIAS
PRESIDENT

03/12/18

3. Λοιπές ασώματες ακινητοποιήσεις

	Αξία κτήσεως 31.12.2000	Δρχ.	700.000
Μείον:	Αποσβέσεις μέχρι 31.12.2000	«	699.999
	Αναπόσβεστη αξία 31.12.2000	Δρχ.	1

Η παραπάνω αξία κτήσεως αφορά σε καταβληθέντα δικαιώματα διασφάλισης ποιότητας και αναλύονται στη σελίδα 49 του βιβλίου Απογραφών και Ισολογισμών.

4. Γήπεδα - Οικόπεδα

	Αξία κτήσεως 31.12.2000	Δρχ.	36.121.671

Το ποσό των δρχ. 36.121.671 αφορά την αξία κτήσεως των παρακάτω ακινήτων, όπως αυτή διαμορφώθηκε μετά την αναπροσαρμογή της αξίας τους στις χρήσεις 1992, 1996 και 2000 με βάση τις διατάξεις του Ν..2065/1992 και αναλύεται ως εξής:

α) Γήπεδο, έκτασης 2.335 τ.μ. που βρίσκεται στην κτηματική περιοχή της Κοινότητας Μακρυχωρίου – Λάρισας και μέσα στην Βιομηχανική Περιοχή Λάρισας. Το γήπεδο αυτό βρίσκεται μέσα στο με αριθμό Β.Τ. (8) Βιομηχανικό τετράγωνο, όπως φαίνεται στο αναφερόμενο με αριθμό 212/20.1.1988 σχέδιο οροσημάνσεως με ποιοτική κατάταξη γηπέδων των βιομηχανικών τετραγώνων της Βιομηχανικής Περιοχής Λάρισας, δυνάμει του με αριθμό 13974/30.8.1988 συμβολαίου, του συμβολαιογράφου Βόλου Γεωργίου Χρήστου Καλομέρα. Δρχ. 7.202.261

β) Γήπεδο έκτασης 4.541 τ.μ. που βρίσκεται μέσα στη Βιομηχανική Περιοχή Λάρισας, της κτηματικής περιφέρειας της Κοινότητας Μακρυχωρίου- Λάρισας, στην περιφέρεια του Υποθηκοφυλακείου Κισσάβου και ειδικότερα στο αριθμ. οκτώ (8) Ο.Τ. αυτής, με αριθμό σχεδίου

"Intertranslations Ltd"
Intertranslations Translations Single Member Limited Liability Company
Translation Services, Internet Services, Document Data Processing
4 El. Venizelou Street, Kallithea, Greece 17676
VAT No: EL095730866, Tax Office: A' KALLITHEA
Tel: +30 210 922 5000

GEORGIOS KARKANIAS
PRESIDENT

02/12/10

261β σχέδιο της ΕΤΒΑ Α.Ε. με θέμα τροποποίηση μελέτης ρυμοτομικού σχεδίου ΒΙ.ΠΕ. Λάρισας, δυνάμει του με αριθμό 24261/28.6.1996 συμβολαίου του συμβολαιογράφου Βόλου Γεωργίου Χρήστου Καλομέρα. Δρχ. 10.035.610

γ) Γήπεδο, έκτασης 6.994τ.μ. που βρίσκεται στην Βιομηχανική Περιοχή Λάρισας, στο Οικοδομικό τετράγωνο 8, φαίνεται με τα κεφάλαια αλφαβητικά στοιχεία Α.Β.Γ.Δ.Ε.Ζ.Α. στο με αριθμό 261β/19-9-2000 σχεδιάγραμμα «Τροποποίηση Μελέτης Ρυμοτομικού σχεδίου Βιομηχανικής Περιοχής Λάρισας», δυνάμει του με αριθμό 3235/29.11.2000 συμβολαίου της συμβολαιογράφου Αθηνών Φλώρας συζύγου Ηλία Μπλάνα. Δρχ. 18.883.800

Δρχ. 36.121.671

Σημειώνεται ότι, επί του ανωτέρω υπό στοιχείο α ακινήτου έχουν εγγραφεί προσημειώσεις υποθηκών ποσού δρχ. 24.000.000 υπέρ της τράπεζας Μακεδονίας – Θράκης Α.Ε..

5. Κτίρια και τεχνικά έργα

	Αξία κτήσεως 31.12.2000	Δρχ. 270.900.680
Μείον:	Αποσβέσεις μέχρι 31.12.2000	« 85.016.796
	Αναπόσβεστη αξία 31.12.2000	Δρχ. 185.883.884

Το ποσό των δρχ. 270.900.680 αφορά στην αξία κτήσεως ή το κόστος κατασκευής, όπως διαμορφώθηκε και μετά τις αναπροσαρμογές της αξίας των ακινήτων στις χρήσεις 1996 και 2000, σύμφωνα με τις διατάξεις του Ν. 2065/1992, των παρακάτω ακινήτων και τεχνικών έργων.

α) Κτιριακές και λοιπές εγκαταστάσεις οι οποίες σύμφωνα με τις υπ'αριθμ. 105/89, 266/97 (αναθεώρηση 29-7-98) οικοδομικές άδειες περιλαμβάνουν:

- βιοτεχνικούς χώρους με συνολική επιφάνεια (δόμηση) 2090,98 m^2, όγκου 20420,43 m^3.
- υπόγειο με επιφάνεια (δόμηση) 100 m^2 και όγκου 300,00 m^3.

"Intertranslations Ltd"
Intertranslations Translations Single Member
Limited Liability Company
Translation Services, Internet Services, Document Data Processing
4 El. Venizelou Street, Kallithea, Greece 17676
VAT No: EL095730866, Tax Office: A' KALLITHEA
Tel: +30 210 922 5000

GEORGIOS KARKANIAS
PRESIDENT

03/12/18

Το ποσό των δρχ. 510.000 αφορά σε συμμετοχές της εταιρείας σε Κοινοπραξίες εκτέλεσης τεχνικών έργων, οι οποίες είναι οι εξής:

- Κοινοπραξία ΑΚΡΙΤΑΣ ΑΤΕΒ – Α. ΚΑΡΚΑΝΙΑΣ Ε.Π.Ε. – Μ. ΧΑΤΖΗΗΛΙΟΥ (Ποσοστό συμμετοχής 49,5%)	Δρχ.	495.000
- Κοινοπραξία ΣΟΥΡΛΑ ΑΤΕ – Α. ΚΑΡΚΑΝΙΑΣ ΕΠΕ (ποσοστό συμ/χής 3%)	Δρχ.	15.000
	Δρχ.	510.000

Σημειώνεται ότι οι ανωτέρω Κοινοπραξίες δεν ελέγχονται από Ορκωτό Ελεγκτή Λογιστή.

10. Λοιπές μακροπρόθεσμες απαιτήσεις

Υπόλοιπο 31.12.2000	Δρχ.	230.000

Το ποσό των δρχ. 230.000 αφορά σε δοθείσες εγγυήσεις προς τη Δ.Ε.Η.

11. Προϊόντα έτοιμα και ημιτελή

Υπόλοιπο 31.12.2000	Δρχ.	1.129.000

Το ποσό των δρχ. 1.129.000 αφορά την αξία των αποθεμάτων ετοίμων προϊόντων (εξαρτημάτων μηχανημάτων βιολογικού καθαρισμού) κατά την 31.12.2000. Αναλυτικά περιγράφονται στη σελίδα 14 του Βιβλίου Απογραφών και Ισολογισμών.

12. Πρώτες και βοηθητικές ύλες – Αναλώσιμα υλικά και Ανταλλακτικά

Υπόλοιπο 31.12.2000	Δρχ.	52.330.107

Το ποσό των δρχ. 52.330.107 αντιπροσωπεύει το κόστος κτήσεως των ευρισκόμενων στις αποθήκες της εταιρείας κατά την 31.12.2000 αποθεμάτων. Αναλυτικά παρατίθεται στις σελίδες 1-14 του Βιβλίου Απογραφών και Ισολογισμών και αφορούν σε:

"Intertranslations Ltd"
Intertranslations Translations Single Member
Limited Liability Company
Translation Services, Internet Services, Document Data Processing
4 El. Venizelou Street, Kallithea, Greece 17676
VAT No:EL096730866, Tax Office: 7 KALLITHEA
Tel: +30 2 22 56 0

GEORGIOS KARKANIAS
PRESIDENT

03/12/18

- Πρώτες και βοηθητικές ύλες, αναλώσιμα υλικά, εξαρτήματα για την παραγωγή μηχανημάτων και λοιπού εξοπλισμού για εγκαταστάσεις βιολογικού καθαρισμού, ανταλλακτικά μηχανημάτων Δρχ. 50.703.107
- Ηλεκτροκινητήρες BONFIGLIOLI « 1.627.000
Δρχ. 52.330.107

13. Προκαταβολές για αγορές αποθεμάτων
Υπόλοιπο 31.12.2000 Δρχ. 4.756.121

Το ποσό των δρχ. 4.756.121 αφορά σε προκαταβολές προς προμηθευτές και αναλύεται στη σελίδα 58 του βιβλίου Απογραφών και Ισολογισμών.

14. Πελάτες
Υπόλοιπο 31.12.2000 Δρχ. 178.479.926

Το ανωτέρω ποσό αφορά στα ανεξόφλητα κατά την 31.12.2000 υπόλοιπα απαιτήσεων από πελάτες, από τις επί πιστώσει πωλήσεις της εταιρείας και από την παροχή υπηρεσιών εκτέλεσης τεχνικών έργων και έχουν καταχωρηθεί αναλυτικά στις σελίδες 51-53 του Βιβλίου Απογραφών και Ισολογισμών

Σημειώνεται ότι, στις απαιτήσεις από πελάτες κατά την 31.12.2000, περιλαμβάνονται αμετάβλητα από προηγούμενες χρήσεις χρεωστικά υπόλοιπα πελατών ποσού δρχ. 1.533.860 καθώς και επίδικη απαίτηση κατά πελάτη ποσού δρχ. 20.515.008. Για την κάλυψη της ζημίας που ενδέχεται και προκύψει από τη μη είσπραξη των ανωτέρω επίδικων και σε καθυστέρηση απαιτήσεων, δεν έχει σχηματισθεί πρόβλεψη σε βάρος των αποτελεσμάτων της χρήσεως 2000.

15. Επιταγές εισπρακτέες (μεταχρονολογημένες)
Υπόλοιπο 31.12.2000 Δρχ. 14.100.000

"Intertranslations Ltd"
Intertranslations Translations Single Member
Limited Liability Company
Translation Services, Internet Services, Document Data Processing
4 El. Venizelou Street, Kallithea, Greece 17676
VAT No: EL095730666, Tax Office: A' KALLITHEA
Tel: +30 210 922 5000

GEORGIOS KARKANIAS
PRESIDENT

03/12/18

Το παραπάνω ποσό αντιπροσωπεύει την αξία δύο μεταχρονολογημένων επιταγών που εμφανίζονται στη σελίδα 54 του Βιβλίου Απογραφών και Ισολογισμών ως εξής:

- Επιταγή λήξεως 19.1.2001	Δρχ.	11.600.000
- Επιταγή λήξεως 10.3.2001	«	2.500.000
	Δρχ.	14.100.000

16. **Βραχυπρόθεσμες απαιτήσεις από συμμετοχές σε Κοινοπραξίες**

Υπόλοιπο 31.12.2000 Δρχ. 206.430.498

Το παραπάνω ποσό αντιπροσωπεύει τις απαιτήσεις της εταιρείας κατά την 31.12.2000, οι οποίες προέρχονται από έσοδα συμμετοχών αυτής σε Κοινοπραξίες εκτελέσεως τεχνικών έργων και έχουν καταχωρηθεί αναλυτικά στις σελίδες 53-54 του Βιβλίου Απογραφών και Ισολογισμών.

Σημειώνεται ότι, από το παραπάνω συνολικό ποσό των απαιτήσεων, ποσό δρχ. 84.584.285 αφορά σε έσοδα συμμετοχών της χρήσεως 2000, που προκύπτουν από βεβαιώσεις Κοινοπραξιών στις οποίες συμμετέχει η εταιρεία και οι οποίες δεν ελέγχονται από Ορκωτό Ελεγκτή Λογιστή, ενώ το υπόλοιπο των απαιτήσεων εκ. δρχ. 121.846.213 προέρχεται από έσοδα συμμετοχών της προηγούμενης χρήσεως 1999, από Κοινοπραξίες οι οποίες επίσης δεν έχουν ελεγχθεί από Ορκωτό Ελεγκτή Λογιστή.

17. **Χρεώστες διάφοροι**

Υπόλοιπο 31.12.2000 Δρχ. 31.838.329

Το παραπάνω ποσό των δρχ. 31.838.329 αναλύεται στις σελίδες 53 και 64 του βιβλίου Απογραφών και Ισολογισμών και αφορά σε απαιτήσεις από Ελληνικό Δημόσιο για:

"Intertranslations Ltd"
Intertranslations Translations Single Member
Limited Liability Company
Translation Services, Internet Services, Document Data Processing
4 El. Venizelou Street, Kallithea, Greece 17676
VAT No: EL095730866, Tax Office: A' KALLITHEA
Tel: +30 210 922 5000

GEORGIOS KARKANIAS
PRESIDENT

03/12/18

- Χρεωστικό υπόλοιπο λογαριασμού Εκκαθάρισης φόρου εισοδήματος χρήσεως 1999. δρχ. 4.714.976

- Χρεωστικό υπόλοιπο λογαριασμού εκκαθάρισης φόρου εισοδήματος χρήσεως 2000 δρχ. 27.123.353

δρχ. 31.838.329

Σχετικά με τις ανωτέρω απαιτήσεις σημειώνουμε το εξής:

- Στις 8/1/2001 εισπράχθηκε από το Ελληνικό Δημόσιο ποσό δρχ. 4.710.260 έναντι της απαίτησης προς επιστροφή που προέκυπτε από τη Δήλωση φορολογίας εισοδήματος της εταιρείας του οικονομικού έτους 2000.

- Το χρεωστικό υπόλοιπο του λογαριασμού Εκκαθάρισης φόρου εισοδήματος 2000 προέρχεται ως εξής:

Προκαταβληθείς φόρος εισοδήματος 3% επί των Εσόδων από Δημόσια Τεχνικά έργα δρχ. 30.281.534

(+) Παρακρατηθείς φόρος εισοδήματος 3% επί εσόδων από Ιδιωτικά τεχνικά έργα « 13.265.707

δρχ. 43.547.241

Μείον: Φόρος εισοδήματος φορολογητέων κερδών χρήσεως 2000 δρχ. 16.423.888

Χρεωστικό υπόλοιπο 31.12.2000 δρχ. 27.123.353

Επισημαίνουμε ότι, η εταιρεία έχει ελεγχθεί φορολογικά μέχρι και τη χρήση 1998 και επομένως οι φορολογικές της υποχρεώσεις των δύο τελευταίων χρήσεων δεν έχουν καταστεί οριστικές.

18. **Διαθέσιμα**

Υπόλοιπο 31.12.2000 Δρχ. 44.804.700

Το παραπάνω ποσό αναλύεται στις σελίδες 54-55 του Βιβλίου Απογραφών και Ισολογισμών και αφορά:

GEORGIOS KARKANIAS
PRESIDENT

"Intertranslations Ltd"
Intertranslations Translations Single Member
Limited Liability Company
Translation Services, Internet Services, Document Data Processing
4 El. Venizelou Street, Kallithea, Greece 17676
VAT No: EL

03/12/18

- Ταμείο	Δρχ.	33.113.962
Υπόλοιπο λογ. «ταμείο». Όπως διαπιστώθηκε από τη διερεύνηση του λογαριασμού αυτού, προκύπτει από τις συνήθεις συναλλαγές της εταιρείας.		
- Καταθέσεις όψεως στην Εθνική Τράπεζα λογ. 81447043	Δρχ.	50.000
- Καταθέσεις όψεως στην Τράπεζα Πειραιώς λογ. 5606-004843-693	Δρχ.	169.999
- Καταθέσεις όψεως στην Τράπεζα Εργασίας λογ. 017/60904-00000/10	Δρχ.	625.351
- Καταθέσεις όψεως στη Λαϊκή τράπεζα λογ. 012/027850/001	Δρχ.	2.915
- Χρεωστικό υπόλοιπο αλληλόχρεου λογαριασμού στην τράπεζα Εργασίας λογ.017/60904-00101/16	Δρχ.	841.507
- Χρεωστικό υπόλοιπο αλληλόχρεου λογαριασμού στην Λαϊκή Τράπεζα λογ. 012-027850-470	Δρχ.	1.036
- Προθεσμιακή κατάθεση εγγυημένου κεφαλαίου GLOBAL TOP 10 λήξεως 20.12.2002 στη Λαϊκή τράπεζα	Δρχ.	5.000.000
- Προθεσμιακή κατάθεση εγγυημένου κεφαλαίου EURO-GLOBAL λήξεως 20.12.2001 στη Λαϊκή τράπεζα	Δρχ.	5.000.000
Σύνολο	Δρχ.	44.804.700

19. Εταιρικό Κεφάλαιο

Υπόλοιπο 31.12.2000 Δρχ. 200.000.000

Για το εταιρικό κεφάλαιο, που είναι καταχωρημένο στη σελίδα 55 του Βιβλίου Απογραφών και Ισολογισμών, αναφερόμαστε στην προηγούμενη παράγραφο Ι.4.

20. Διαφορές από αναπροσαρμογή αξίας λοιπών περιουσιακών στοιχείων

Υπόλοιπο 31.12.2000 Δρχ. 29.066.613

Πρόκειται για τη διαφορά αναπροσαρμογής (υπεραξία), που προέκυψε από την αναπροσαρμογή της αξίας των ακινήτων της εταιρείας, με βάση το Ν. 2065/1992 και αναλύεται ως εξής:

"Intertranslations Ltd"
Intertranslations Translations Single Member
Limited Liability Company
Translation Services, Internet Services, Document Data Processing
4 El. Venizelou Street, Kallithea, Greece 17676
VAT No: EL095730866, Tax Office: A' KALLITHEA
Tel: +30 210 922 5000

GEORGIOS KARKANIAS
PRESIDENT

03/12/18

- Διαφορά αναπροσαρμογής που προέκυψε στη χρήση 1996 και δεν έχει ακόμη κεφαλοποιηθεί Δρχ. 13.618.006
- Διαφορά αναπροσαρμογής που προέκυψε στην τρέχουσα χρήση από την αναπροσαρμογή της αξίας των ακινήτων της εταιρείας στις 30.12.2000 Δρχ. 15.448.607

Δρχ. 29.066.613

21. Επιχορηγήσεις επενδύσεων πάγιου Ενεργητικού

Υπόλοιπο 31.12.2000 Δρχ. 88.801.453

Πρόκειται για το υπόλοιπο των εισπραχθεισών σε προηγούμενες χρήσεις επιχορηγήσεων Ν.1262/1982 και 1892/1990, που αναλογεί στο αναπόσβεστο υπόλοιπο των επιχορηγηθέντων παγίων ως εξής:

- Αναλογούσες επιχορηγήσεις στην αναπόσβεστη αξία επιχορηγηθέντων κτιρίων Δρχ. 44.333.024
- Αναλογούσες επιχορηγήσεις στην αναπόσβεστη αξία επιχορηγηθέντων μηχανημάτων Δρχ. 44.468.429

Δρχ. 88.801.453

22. Αποθεματικά Κεφάλαια

Υπόλοιπο 31.12.2000 Δρχ. 193.459.684

Το παραπάνω ποσό αναλύεται στις σελίδες 55-56 του Βιβλίου Απογραφών και Ισολογισμών και αφορά:

- Τακτικό αποθεματικό, σχηματισθέν από τα κέρδη της χρήσεως 2000 και προηγούμενων χρήσεων, σύμφωνα με το άρθρο 24 του Ν. 3190/1955 Δρχ. 26.970.170
- Ειδικά αποθεματικά που σχηματίσθηκαν από τα κέρδη προηγούμενων χρήσεων, για την κάλυψη υποχρεώσεων σχηματισμού αποθεματικών των νόμων 1262/82 και 1892/90 Δρχ. 8.689.588

"Intertranslations Ltd"
Intertranslations Translations Single Member Limited Liability Company
Translation Services, Internet Services, Document Data Processing
4 El. Venizelou Street, Kallithea, Greece 17676
VAT No: EL095730388, Tax Office: A' KALLITHEA
Tel: +30

GEORGIOS KARKANIAS
PRESIDENT

03/12/18

- Αποθεματικά από αφορολόγητα κέρδη τεχνικών επιχειρήσεων, σχηματισθέντα από τα κέρδη της χρήσεως 2000 και των προηγούμενων χρήσεων 1998, 1999 Δρχ. 149.854.935
- Αφορολόγητα αποθεματικά ειδικών διατάξεων νόμων που σχηματίσθηκαν από κέρδη προηγούμενων χρήσεων Δρχ. 7.944.991

Δρχ. 193.459.684

Σημειώνεται ότι, στα αποθεματικά από αφορολόγητα κέρδη τεχνικών επιχειρήσεων, περιλαμβάνονται αποθεματικά φορολογηθέντα σύμφωνα με το άρθρο 7 Ν. 2579/1998 δρχ. 18.670.924.

23. Προμηθευτές

Υπόλοιπο 31.12.2000 Δρχ. 43.119.355

Το παραπάνω ποσό των δρχ. 43.119.355, αναλύεται κατά προμηθευτή στις σελίδες 57-61 του Βιβλίου Απογραφών και ισολογισμών και αφορά τις ανεξόφλητες υποχρεώσεις της εταιρείας κατά την 31.12.2000 προς:

- προμηθευτές εσωτερικού δρχ. 35.868.322
- προμηθευτές εξωτερικού σε Ξ.Ν. (Lits 41.070.000) δρχ. 7.251.033

δρχ. 43.119.355

Σημειώνεται ότι δεν έγινε αποτίμηση των υποχρεώσεων σε Lits της 31.12.2000, με βάση την επίσημη τιμή του Ξ.Ν., αφού οι συναλλαγματικές διαφορές που προέκυπταν ήταν ασήμαντες κατά προμηθευτή.

24. Γραμμάτια πληρωτέα

Υπόλοιπο 31.12.2000 Δρχ. 1.137.250

"Intertranslations Ltd"
Intertranslations Translations Single Member
Limited Liability Company
Translation Services, Internet Services, Document Date Processing
4 El. Venizelou Street, Kallithea, Greece 17576
VAT No: EL095730866, Tax Office: A' KALLITHEA
Tel: +30 210 922 5000

GEORGIOS KARKANIAS
PRESIDENT

03/12/18

Το παραπάνω ποσό προέρχεται από προηγούμενες χρήσεις και όπως μας δηλώθηκε προφορικά, δεν υφίστανται ως υποχρεώσεις και συνεπώς χρήζει τακτοποιήσεως με μεταφορά στα αποτελέσματα.

25. Επιταγές πληρωτέες

Υπόλοιπο 31.12.2000	Δρχ.	75.871.434

Πρόκειται για εβδομήντα τρεις (73) επιταγές πληρωτέες και όπως προκύπτει από την ανάλυσή τους στις σελίδες 62-63 του βιβλίου Απογραφών και Ισολογισμών λήγουν από 29/12/2000 μέχρι 12/5/2001.

26. Τράπεζες λογ/σμοί βραχυπρόθεσμων υποχρεώσεων

Υπόλοιπο 31.12.2000	Δρχ.	15.137.875

Το παραπάνω ποσό αφορά σε βραχυπρόθεσμες τραπεζικές υποχρεώσεις, που εμφανίζονται στις σελίδες 61-62 του Βιβλίου Απογραφών και Ισολογισμών και αναλύονται ως εξής:

- Λογαριασμός δανείου από Τράπεζα Κύπρου αριθ. λογ/σμού 1097359 σε Δρχ.	Δρχ.	57.407
- Δάνειο σε ΕΥΡΩ από Τράπεζα Εργασίας λογ/σμός 017/60904-33100/19 €44256,69	Δρχ.	15.080.468
	Δρχ.	15.137.875

27. Υποχρεώσεις από φόρους - τέλη

Υπόλοιπο 31.12.2000	Δρχ.	56.387.889

Το παραπάνω ποσό των δρχ. 56.387.889 αναλύεται στις σελίδες 63-65 του βιβλίου Απογραφών και Ισολογισμών και αφορά υποχρεώσεις για:

"Intertranslations Ltd"
Intertranslations Translations Single Member
Limited Liability Company
Translation Services, Internet Services, Document Data Processing
4 El. Venizelou Street, Kallithea, Greece 17676
VAT No: EL095730858, Tax Office: A' KALLITHEA
Tel: +30 210 922 5000

GEORGIOS KARKANIAS
PRESIDENT

03/12/18

- Φ.Π.Α. μηνός Δεκεμβρίου 2000	Δρχ.	49.296.911
- Φ.Μ.Υ. – ΣΤ΄ Δίμηνο	«	591.882
- Χ.Μ.Υ. – ΣΤ' Δίμηνο	«	313.743
- Φόρος αμοιβών ελεύθερων επαγγελματικών - ΣΤ' Δίμηνο	«	4.466.040
- Φόρος υπεραξίας Ν. 2065/1992	«	1.104.678
- Φόρος αμοιβών εργολάβων	«	337.515
- Φόρος 3% τεχνικών έργων	«	223.524
- Αγγελιόσημο υπέρ ΤΣΠΕΑΘ	«	53.596
Σύνολο	Δρχ.	56.387.889

Σημειώνεται ότι, όλες οι ανωτέρω υποχρεώσεις καταβλήθηκαν εμπρόθεσμα στην επόμενη χρήση, εκτός του φόρου υπεραξίας Ν. 2065/1992, του οποίου η υποχρέωση για την καταβολή της δεύτερης δόσης λήγει την 31/7/2001.

28. Ασφαλιστικοί Οργανισμοί

Υπόλοιπο 31.12.2000	Δρχ.	8.594.755

Το παραπάνω ποσό των δρχ. 8.594.755 αναλύεται στις σελίδες 65-66 του Βιβλίου Απογραφών και Ισολογισμών και αφορά υποχρεώσεις για:

- Ι.Κ.Α μισθωτών και ημερομισθίων (Δεκέμβριος και δώρο Χριστουγέννων)	Δρχ.	4.606.700
- ΤΕΑΗΕ (Δεκέμβριος και Δώρο Χριστουγέννων)	«	36.730
- ΕΤΕΜ (Δεκέμβριος και Δώρο Χριστουγέννων)	«	132.208
- Ι.Κ.Α. οικοδόμων (Δεκέμβριος 2000)	«	2.689.067
- Δωρόσημο οικοδόμων (Δεκέμβριος 2000)	«	1.130.050
	Δρχ.	8.594.755

29. Πιστωτές διάφοροι

Υπόλοιπο 31.12.2000	Δρχ.	142.551.279

"Intertranslations Ltd"
Intertranslations Translations Single Member Limited Liability Company
Translation Services, Internet Services, Document Data Processing
4 El. Venizelou Street, Kallithea, Greece 17676
VAT No: EL095730866, Tax Office: A' KALLITHEA
Tel: +30 210 922 5000

GEORGIOS KARKANIAS
PRESIDENT

03/12/18

(Σελίδα 62 Βιβλίου Απογραφών και Ισολογισμών)

Πρόκειται για οφειλόμενα στους εταίρους κέρδη της παρούσας χρήσεως, κατανεμόμενα ανά εταίρο ως εξής:

- Απόστολος Καρκανιάς του Γεωργίου	Δρχ.	106.913.459
- Σταματία σύζυγος Αποστόλου Καρκανιά	«	35.637.820
	Δρχ.	142.551.279

30. Έξοδα χρήσεως δουλευμένα

Υπόλοιπο 31.12.2000	Δρχ.	1.055.300

(Σελίδα 62 Βιβλίου Απογραφών και Ισολογισμών)

Αφορά σε οφειλόμενες δαπάνες χρήσεως 2000 προς τον Ο.Τ.Ε., για τηλεφωνικά τέλη περιόδου 12.9.2000-8.11.2000.

Γ. ΠΕΡΙ ΤΩΝ ΑΠΟΤΕΛΕΣΜΑΤΩΝ ΧΡΗΣΕΩΣ 2000

Από το δειγματοληπτικό έλεγχο των λογαριασμών αποτελεσμάτων και τις συμφωνίες αυτών δεν διαπιστώθηκαν διαφορές.

III. ΣΥΜΠΕΡΑΣΜΑ

Μετά από όσα εκθέσαμε ανωτέρω, σχετικά με τα κονδύλια του Ισολογισμού μετασχηματισμού της 31/12/2000, Πιστοποιούμε ότι, οι λογιστικές αξίες των εισφερόμενων περιουσιακών στοιχείων, είναι αυτές που εμφανίζονται λεπτομερώς στο βιβλίο Απογραφών και Ισολογισμών της μετασχηματιζόμενης επιχείρησης «Α. ΚΑΡΚΑΝΙΑΣ ΕΤΑΙΡΕΙΑ ΠΕΡΙΩΡΙΣΜΕΝΗΣ ΕΥΘΥΝΗΣ», στις σελίδες 1 έως 69 και ότι η αξία αυτών όπως εμφανίζονται στον Ισολογισμό προκύπτει από τα δεδομένα της απογραφής.

"Intertranslations Ltd"
Intertranslations Translations Single Member
Limited Liability Company
Translation Services, Internet Services, Document Data Processing
4 El. Venizelou Street, Kallithea, Greece 17676
VAT No: EL095730866, Tax Office: KALLITHEA
Tel: 30 210

GEORGIOS KARKANIAS
PRESIDENT

03/12/18

Η Εταιρεία καλύπτει όλες τις προϋποθέσεις που προβλέπονται από τις διατάξεις του Ν. 2166/1993 για τη μετατροπή της σε Ανώνυμη Εταιρεία.

Δηλαδή:

α) Τηρεί βιβλία Γ΄ κατηγορίας του Κ.Β.Σ. (Π.Δ. 186/1992)

β) Εχει συντάξει περισσότερους της μίας χρήσεως Ισολογισμούς.

γ) Το Μετοχικό Κεφάλαιο, της από τη μετατροπή προερχόμενης Ανώνυμης Εταιρείας, υπερβαίνει το από το Ν.2579/1998 καθοριζόμενο ελάχιστο ύψος των εκατό εκατομμυρίων δραχμών.

Επιθυμούμε να σας γνωρίσουμε ότι είμαστε πρόθυμοι να παράσχουμε προς τις Δημόσιες αρχές, που θα δοθεί η παρούσα έκθεση, κάθε πρόσθετη διευκρίνιση σχετικά με τα στοιχεία του Ισολογισμού της 31.12.2000 που αναλύσαμε και σχολιάσαμε παραπάνω.

Με τιμή

ΧΡΗΣΤΟΣ Γ. ΧΗΡΑΣ
ΟΡΚΩΤΟΣ ΕΛΕΓΚΤΗΣ ΛΟΓΙΣΤΗΣ
Α.Μ. Σ.Ο.Ε.Λ. 15241
Σ.Ο.Λ. α.ε.ο.ε.

"Intertranslations Ltd"
Intertranslations Translations Single Member
Limited Liability Company
Translation Services, Internet Services, Document Data Processing
4 El. Venizelou Street, Kallithea, Greece 17676
VAT No: EL095730866, Tax Office: A' KALLITHEA
Tel: +30 210 922 5000

GEORGIOS KARKANIAS
PRESIDENT

03/12/18

"Intertranslations Ltd"
Intertranslations Translations Single Member
Limited Liability Company
Translation Services, Internet Services, Document Data Processing
4 El. Venizelou Street, Kallithea, Greece 17676
VAT· No: EL095730866, Tax Office: A' KALLITHEA
Tel: +30 210 922 5000

GEORGIOS KARKANIAS
PRESIDENT

03/12/18

Όλα τα εις την άνω έκθεση ελέγχου του ορκωτού ελεγκτή αναφερόμενα και περιγραφόμενα περιουσιακά στοιχεία της μετατρεπομένης εταιρίας περιορισμένης ευθύνης με την επωνυμία «Α.ΚΑΡΚΑΝΙΑΣ ΕΤΑΙΡΙΑ ΠΕΡΙΩΡΙΣΜΕΝΗΣ ΕΥΘΥΝΗΣ», ήτοι τα αυτοκίνητα, τα μηχανήματα και λοιπά κινητά πράγματα, τις απαιτήσεις και υποχρεώσεις και γενικά κάθε στοιχείο που περιλαμβάνεται στην άνω έκθεση ελέγχου , οι εδώ συμβαλλόμενοι, ως μόνοι εταίροι της μετατρεπομένης εταιρίας περιορισμένης ευθύνης, εισφέρουν στην δια του παρόντος εκ μετατροπής ιδρυομένη ανώνυμη εταιρία με την επωνυμία «ΚΑΡΚΑΝΙΑΣ-ΤΕΧΝΟΛΟΓΙΑ ΠΕΡΙΒΑΛΛΟΝΤΟΣ ΑΝΩΝΥΜΗ ΕΤΑΙΡΙΑ», εκχωρούν, παραχωρούν, μεταβιβάζουν και παραδίδουν στην ανώνυμη αυτή εταιρία κατά πλήρες δικαίωμα κυριότητας νομής και κατοχής και με τα κάθε φύσεως δικαιώματά τους προσωπικά και πραγματικά και τις συναφείς αγωγές και ενστάσεις τους, αποξενούμενοι κάθε δικαιώματός τους και αποκαθιστώντας την εκ της μετατροπής αυτής ιδρυομένη Ανώνυμη εταιρία τελεία, κυρία, νομέα και κάτοχο αυτών. Υπόσχονται δε και εγγυώνται, υπό την ως άνω ιδιότητά τους, όλα τα ως άνω εισφερόμενα, εκχωρούμενα, παραχωρούμενα, μεταβιβαζόμενα και παραδιδόμενα περιουσιακά στοιχεία ελεύθερα από κάθε βάρος, χρέος, υποθήκη, προσημείωση, κατάσχεση, ενέχυρο, τρίτου εκνικήσεως και διεκδικήσεως, κάθε φιλονικείας και διενέξεως και

"Intertranslations Ltd"
Intertranslations Translations Single Member
Limited Liability Company
Translation Services, Internet Services, Document Data Processing
4 El. Venizelou Street, Kallithea, Greece 17676
VAT No: EL095730866, Tax Office: A' KALLITHEA
Tel: +30 210 922 5000

GEORGIOS KARKANIAS
PRESIDENT

03/12/18

παντός εν γένει δικαιώματος τρίτου και παραιτούνται ανεπιφύλακτα κάθε δικαιώματος προς προσβολή, διάρρηξη ή ακύρωση της προς την ανώνυμη αυτή εταιρία εισφοράς και μεταβιβάσεως όλων εν γένει των ως άνω περιουσιακών στοιχείων, για οποιονδήποτε τυπικό και ουσιαστικό λόγο και αιτία ακόμη και για τους λόγους που αναφέρονται στα άρθρα 178, 179 και 388 του Α.Κ. οι προϋποθέσεις και τα περιστατικά των οποίων βεβαιούν οι εδώ συμβαλλόμενοι ότι δεν συντρέχουν εν προκειμένω.

Μεταξύ των εις την ως άνω έκθεση ελέγχου περιλαμβανομένων περιουσιακών στοιχείων της ως άνω εταιρίας είναι:

1.- Γήπεδο έκτασης 2.335 τ.μ. που βρίσκεται στην κτηματική περιοχή της Κοινότητας Μακρυχωρίου - Λάρισας και μέσα στην Βιομηχανική περιοχή Λάρισας. Το γήπεδο αυτό βρίσκεται μέσα στο με αριθμό Β.Τ. (8) Βιομηχανικό τετράγωνο, όπως φαίνεται στο αναφερόμενο με αριθμό 212/20-1-1988 σχέδιο οροσημάνσεως με ποιοτική κατάταξη γηπέδων των βιομηχανικών τετραγώνων της Βιομηχανικής Περιοχής Λάρισας, δυνάμει του με αριθμό 13.974/30-8-1988 συμβολαίου του Συμβολαιογράφου Βόλου Γεωργίου Χρήστου Καλομέρα, μεταγεγραμμένου στον τόμο 22 και

"Intertranslations Ltd"
Intertranslations Translations Single Member
Limited Liability Company
Translation Services, Internet Services, Document Data Processing
4 El. Venizelou Street, Kallithea, Greece 17676
VAT No: EL095730366, Tax Office: A' KALLITHEA
Tel: +30 210 922 5000

GEORGIOS KAKKANIAS
PRESIDENT

03/12/18

αριθμ. 315 ιων βιβλίων μεταγραφών του Υποθηκοφυλακείου Κισσάβου,

2.- Γήπεδο έκτασης 4.541 τ.μ. που βρίσκεται μέσα στη Βιομηχανική περιοχή Λάρισας, της κτηματικής περιφέρειας της Κοινότητας Μακρυχωρίου Λάρισας, στην περιφέρεια του Υποθηκοφυλακείου Κισσάβου και ειδικότερα στο αριθμό υκιώ (8) Ο.τ. αυτής, με αριθμό σχεδίου 261β σχέδιο της ΕΤΒΑ Λ.Ε. με θέμα τροποποίηση μελέτης ρυμοτομικού σχεδίου ΒΙ.ΠΕ Λάρισας, δυνάμει του με αριθμό 24.261/28-6-1996 συμβολαίου του Συμβολαιογράφου Βόλου Γεωργίου Χρήστου Καλομέρα, μεταγεγραμμένου στον τόμο 28 και αριθμ. 47 των βιβλίων μεταγραφών του Υποθηκοφυλακείου Κισσάβου. Τα άνω περιγραφόμενα γήπεδα αποτελούν ένα ενιαίο γήπεδα με συνολική επιφάνεια 6.876 τ.μ. και

3.- Γήπεδο έκτασης 6.994 τ.μ., που βρίσκεται στην Βιομηχανική Περιοχή Λάρισας, στο Οικοδομικό τετράγωνο 8, φαίνεται με τα κεφαλαία αλφαβητικά στοιχεία Α-Β-Γ-Δ-Ε-Ζ-Α στο με αριθμό 261β/19-9-2000 σχεδιάγραμμα «Τροποποίηση Μελέτης Ρυμοτομικού σχεδίου Βιομηχανικής Περιοχής Λάρισας» δυνάμει του με αριθμό 3235/29-11-2000 συμβολαίου της Συμβολαιογράφου Αθηνών Φλώρας συζύγου Ηλία Μπλάνα, μεταγεγραμμένου στον τόμο 32 και αριθμ. 289 των βιβλίων μεταγραφών του Υποθηκοφυλακείου Κισσάβου, μετά των επ' αυτών κτιριακών και λοιπών εγκαταστάσεων οι οποίες

GEORGIOS KARKANIAS
PRESIDENT

03/12/18

σύμφωνα με τις υπ' αριθμ. 105/89, 266/97 (αναθεώρηση 29-7-98) οικοδομικές άδειες περιλαμβάνουν α) βιοτεχνικούς χώρους με συνολική επιφάνεια (δόμηση) 2.090,98 τ.μ., όγκου 20.420,43 κυβ. μέτρα, β) υπόγειο με επιφάνεια (δόμηση) 100 τ.μ. και όγκου 300.00 κυβ. μέτρα, γ) χώρους γραφείων συνολικής επιφάνειας (δόμηση) 497,19 τ.μ. και όγκου 1.489,09 κυβ. μέτρα και δ) λεβητοστάσιο με επιφάνεια (δόμηση) 29,63 τ.μ. και όγκου 88,89 κυβ. μέτρα.

Επίσης η άνω εταιρία περιορισμένης ευθύνης με την επωνυμία «Α.ΚΑΡΚΑΝΙΑΣ ΕΤΑΙΡΙΑ ΠΕΡΙΩΡΙΣΜΕΝΗΣ ΕΥΘΥΝΗΣ » έχει στην κυριότητά της τα παρακάτω αυτοκινήτα,

1.- Το υπ' αριθμ. κυκλοφορίας PIZ 8829 φορτηγό αυτοκίνητο, ιδιωτικής χρήσης, εργοστασίου κατασκευής FIAT, τύπου 290AY, με αριθμό πλαισίου ZFA29000000404888 και αριθμό κινητήρα 170D012933,

2.- Το υπ' αριθμ. κυκλοφορίας PIZ 8159 φορτηγό αυτοκίνητο, ιδιωτικής χρήσης, εργοστασίου κατασκευής FIAT, τύπου 146PD52F, με αριθμό πλαισίου ZFA14600008342055 και αριθμό κινητήρα 146B20001376279,

3.- Το υπ' αριθμ. κυκλοφορίας PIH 6450 φορτηγό αυτοκίνητο, ιδιωτικής χρήσης, εργοστασίου

"Intertranslations Ltd"
Intertranslations Translations Single Member
Limited Liability Company
Translation Services, Internet Services, Document Data Processing
4 El. Venizelou Street, Kallithea, Greece 17676
VAT No: EL095730866, Tax Office: A' KALLITHEA
Tel: +30 210 922 5000

GEORGIOS KARKANIAS
PRESIDENT

03/12/18

κατασκευής FIAT, τύπου DUCATO 100, με αριθμό πλαισίου ZFA23000005180177 και κινητήρα 230A30001721961

4.- Το υπ' αριθμ. κυκλοφορίας PIK 5682 φορτηγό αυτοκίνητο, ιδιωτικής χρήσης, εργοστασίου κατασκευής FORD, τύπου TRANSIT 190, με αριθμό πλαισίου WFOAXXBDVAWY25781 και κινητήρα 4EC,

5.- Το υπ' αριθμ. κυκλοφορίας PIK 5683 ΛΕΩΦΟΡΕΙΟ, εργοστασίου κατασκευής FORD, τύπου TRANSIT BUS, με αριθμό πλαισίου WF0EXXGBVEWL34967 και κινητήρα 4EB

6.- Το υπ' αριθμ. κυκλοφορίας PIZ 1602 επιβατικό αυτοκίνητο, ιδιωτικής χρήσης, εργοστασίου κατασκευής FIAT, τύπου TIPO SX IE, με αριθμό πλαισίου ZFA16000002685510 και κινητήρα 130A10468556148

6.- Το υπ' αριθμ. κυκλοφορίας PIH 6164 επιβατικό αυτοκίνητο, ιδιωτικής χρήσης, εργοστασίου κατασκευής FIAT, τύπου COYPE, με αριθμό πλαισίου ZFA175000P0037044 και κινητήρα 138A10000251775 και

7.- Το υπ' αριθμ. κυκλοφορίας PIM 2691 επιβατικό αυτοκίνητο, ιδιωτικής χρήσης, εργοστασίου κατασκευής SAAB, τύπου SAAB 9-5, με αριθμό πλαισίου YS3EF45C8X3047809 και κινητήρα B205E.

Τα ως άνω ακίνητα και αυτοκίνητα στην κατάσταση που αυτά βρίσκονται σήμερα, μεθ' όλων των επ' αυτών και εξ αυτών δικαίων και δικαιωμάτων της, κάθε φύσεως, προσωπικών και

"Intertranslations Ltd"
Intertranslations Translations Single Member
Limited Liability Company
Translation Services, Internet Services, Document Data Processing
4 El. Venizelou Street, Kallithea, Greece 17676
VAT No: EL095730866, Tax Office: A' KALLITHEA
Tel: +30 210 922 5000

GEORGIOS KARKANIAS
PRESIDENT

03/12/18

εμπραγμάτων και των συναφών αγωγών και ενστάσεών τους, οι εδώ συμβαλλόμενοι ως μόνοι εταίροι της μετατρεπομένης εταιρίας περιορισμένης Ευθύνης με την επωνυμία «Α. ΚΑΡΚΑΝΙΑΣ ΕΤΑΙΡΙΑ ΠΕΡΙΩΡΙΣΜΕΝΗΣ ΕΥΘΥΝΗΣ» εισφέρουν με το παρόν στην εκ μετατροπής ιδρυομένη ανώνυμη εταιρία με την επωνυμία «ΚΑΡΚΑΝΙΑΣ-ΤΕΧΝΟΛΟΓΙΑ ΠΕΡΙΒΑΛΛΟΝΤΟΣ ΑΝΩΝΥΜΗ ΕΤΑΙΡΙΑ», παραχωρούν, μεταβιβάζουν και παραδίδουν εις αυτήν κατά πλήρες δικαίωμα κυριότητας, νομής και κατοχής, ελεύθερα από κάθε βάρος, χρέος, ενεχύρου, κατασχέσεως, αναγκαστικής ή συντηρητικής, κληρονομικού δικαίου, τρίτου εκνικήσεως, διεκδικήσεως, μεσεγγυήσεως, οφειλής φόρων, δημοσίων και δημοτικών, τελών κυκλοφορίας, λείας πολέμου, δασμών τελωνείου, διενέξεως, φιλονικίας, αμφισβητήσεως και παντός εν γένει νομικού ελαττώματος.

Αρθρο 40

Οι εδώ συμβαλλόμενοι συμφωνούν και συναποδέχονται ότι στην κατά τα άνω εισφορά της μετατρεπομένης εταιρίας περιορισμένης ευθύνης υπάγονται και περιλαμβάνονται σ' αυτήν: α) και όλα τα λοιπά κινητά πράγματα, τα ανήκοντα κατά κυριότητα, νομή και κατοχή στην μετατρεπομένη εταιρία, έστω και αν αυτά δεν κατονομάζονται ρητώς ή δεν περιγράφονται

"Intertranslations Ltd"
Intertranslations Translations Single Member
Limited Liability Company
Translation Services, Internet Services, Document Data Processing
4 El. Venizelou Street, Kallithea, Greece 17676
VAT No: EL095730866, Tax Office: A' KALLITHEA
Tel: +30 210 922 5000

GEORGIOS KARKANIAS
PRESIDENT

03/12/18

πλήρως ανωτέρω, β) κάθε κινητό ή ακίνητο πράγμα, το οποίο ήθελε τυχόν αποκτήσει η μετατρεπομένη εταιρία μέχρι της νομίμου συστάσεως αυτής της μετατρεπομένης ανωνύμου εταιρίας και γ) όλα τα άϋλα αγαθά και δικαιώματα, τα ανήκοντα στην μετατρεπομένη εταιρία περιορισμένης ευθύνης, έστω και αν αυτά δεν μνημονεύονται ή μνημονεύονται ελλιπώς ανωτέρω ή τα τυχόν αποκτηθησόμενα υπ' αυτής μέχρι της νομίμου δια του παρόντος μετατροπής της σε ανώνυμη εταιρία. Όλα αυτά μεταβιβάζονται στην εκ του μετασχηματισμού μετατροπής ιδρυομένη ανώνυμη εταιρία.

Οι εδώ συμβαλλόμενοι συμφωνούν και συναποδέχονται όπως όλες οι μετά την 31.12.2000 ημερομηνία κατά την οποία έγινε διαπίστωση της Λογιστικής αξίας των περιουσιακών στοιχείων της μετατρεπομένης εταιρίας περιορισμένης ευθύνης, βάσει της έκθεσης ελέγχου του Ορκωτού Ελεγκτή Λογιστή Χρήστου Γ. Χήρα και μέχρι της δημοσιεύσεως του παρόντος καταστατικού ενεργηθείσες και ενεργηθησόμενες πάσης φύσεως συναλλακτικές εργασίες και γενικώτερα πράξεις της δια του παρόντος εις ανώνυμο εταιρία μετατρεπομένης εταιρία περιορισμένης ευθύνης με την επωνυμία «Α. ΚΑΡΚΑΝΙΑΣ ΕΤΑΙΡΙΑ ΠΕΡΙΩΡΙΣΜΕΝΗΣ ΕΥΘΥΝΗΣ», όπως αυτές εμφανίζονται στα λογιστικά βιβλία αυτής, θεωρούνται ως γενόμενες για λογαριασμό της δια του παρόντος εκ του μετασχηματισμού

"Intertranslations Ltd"
Intertranslations Translations Single Member
Limited Liability Company
Translation Services, Internet Services, Document Data Processing
4 El. Venizelou Street, Kallithea, Greece 17676
VAT No: EL095730866, Tax Office: A' KALLITHEA
Tel: +30 210 922 5000

GEORGIOS KARKANIAS
PRESIDENT

03/12/18

μετατροπής αυτής συνιστωμένης ανώνυμης εταιρίας με την επωνυμία «ΚΑΡΚΑΝΙΑΣ - ΤΕΧΝΟΛΟΓΙΑ ΠΕΡΙΒΑΛΛΟΝΤΟΣ ΑΝΩΝΥΜΗ ΕΤΑΙΡΙΑ» στην οποία και αυτοδικαίως μεταβιβάζονται εφόσον δεν καταλείπουν ζημία, την οποία άλλως υποχρεούνται να καλύψουν οι εδώ συμβαλλόμενοι ιδρυτές της εκ μετατροπής ανωνύμου εταιρίας κατά τον λόγον της συμμετοχής τους στο κεφάλαιο της μετατρεπομένης εταιρίας περιορισμένης ευθύνης.

Επίσης οι εδώ συμβαλλόμενοι συμφωνούν και συναποδέχονται όπως όλες οι λογιστικές εγγραφές που αναφέρονται στην προηγούμενη παράγραφο συναλλακτικών εργασιών και γενικότερων πράξεων πραγματοποιούνται στα λογιστικά βιβλία της μετατρεπομένης εταιρίας, θα μεταφερθούν δε αυτές συγκεντρωτικά στα βιβλία της ανωνύμου εταιρίας με την δημοσίευση του παρόντος καταστατικού.

Αρθρο 41

Η δια του παρόντος συμβολαίου πραγματοποιούμενη μετατροπή της εταιρίας περιορισμένης ευθύνης με την επωνυμία «Α. ΚΑΡΚΑΝΙΑΣ ΕΤΑΙΡΙΑ ΠΕΡΙΩΡΙΣΜΕΝΗΣ ΕΥΘΥΝΗΣ», σε ανώνυμη εταιρία με την επωνυμία «ΚΑΡΚΑΝΙΑΣ-ΤΕΧΝΟΛΟΓΙΑ ΠΕΡΙΒΑΛΛΟΝΤΟΣ ΑΝΩΝΥΜΗ ΕΤΑΙΡΙΑ», βάσει των άρθρων 1- 5 του Ν.2166/1993

"Intertranslations Ltd"
Intertranslations Translations Single Member
Limited Liability Company
Translation Services, Internet Services, Document Data Processing
4 El. Venizelou Street, Kallithea, Greece 17676
VAT No: EL095730866, Tax Office: A' KALLITHEA
Tel: +30 210 922 5000

GEORGIOS KARKANIAS
PRESIDENT

03/12/18

ολοκληρώνεται με την δημοσίευση του παρόντος καταστατικού και της αποφάσεως της εποπτεύουσας αρμόδιας αρχής στο Τεύχος Α.Ε. και ΕΠΕ της Εφημερίδας της Κυβερνήσεως. Από της δημοσιεύσεως αυτής, μετά την τήρηση δε και των διατυπώσεων του άρθρου 8 παρ. 1 του Νόμου 3190/1955 κάθε ενεργητικό και παθητικό της μετατρεπομένης εταιρίας περιορισμένης ευθύνης μεταφέρεται λόγω εισφοράς σε είδος στην δια μετατροπής συνιστωμένης ανώνυμη εταιρία, στην οποία αυτοδικαίως και χωρίς άλλη καμμιά διατύπωση υποκαθίσταται στο σύνολο της περιουσίας της μετατραπείσας εταιρίας περιορισμένης ευθύνης και σε όλα τα δικαιώματα και τις υποχρεώσεις αυτής, καθώς επίσης και στις έννομες σχέσεις αυτής με οποιοδήποτε φυσικό ή νομικό πρόσωπο δημοσίου ή ιδιωτικού δικαίου ημεδαπού ή αλλοδαπού και με οποιαδήποτε δημοσία, δημοτική, κοινοτική ή άλλη αρχή και υπηρεσία και σε όλες τις πιστωτικές και οποιασδήποτε άλλης φύσεως συμβάσεις της μετατραπείσας εταιρίας μετά παντός τρίτου, ειδικότερα δε μετά των τραπεζών, αποκτά δε η εκ μετασχηματισμού μετατροπής ιδρυομένη ανώνυμη εταιρία πλήρη κυριότητα, νομή και κατοχή όλων των περιουσιακών στοιχείων της μετατραπείσας εταιρίας περιορισμένης ευθύνης, δυνάμενη και δικαιούμενη όπως από της κατά τα άνω συντελέσεως των διατυπώσεων της παρούσης μετατροπής διακατέχει, νέμεται και διαθέτει

"Intertranslations L.td"
Intertranslations Translations Single Member
Limited Liability Company
Translation Services, Internet Services, Document Data Processing
4 El. Venizelou Street, Kallithea, Greece 17676
VAT No: EL095730866, Tax Office: A' KALLITHEA
Tel: +30 210 922 5000

GEORGIOS KARKANIAS
PRESIDENT

03/12/18

αυτή όπως θέλει και κατά πλήρες και απόλυτο ιδιοκτησίας δικαίωμα, ρητώς συμπεριλαμβανομένων και των άϋλων αγαθών και δικαιωμάτων, έστω και αν τα περιουσιακά αυτά στοιχεία ελλιπως ή ουδόλων περιγράφησαν ανωτέρω, καθώς και να συνεχίσει με τους αυτούς όρους τις κάθε φύσεως συμφωνίες και εν γένει δικαιοπραξίες της μετατραπείσας ως άνω εταιρίας περιορισμένης ευθύνης και να κινεί τους οικείους λογαριασμούς κατά συνέχεια της εταιρίας αυτής σε όλες τις σχέσεις και τα δικαιώματά της, συνεχιζομένων συγχρόνως και των τυχόν εκκρεμών δικών, των οποίων δεν επέρχεται δια της μετατροπής βιαία διακοπή, δεδομένου άλλωστε και του ότι κατά ρητή διάταξη του νόμου από της κατά τα άνω συντελέσεως των διατυπώσεων μετατροπής ή εις ανώνυμη εταιρία μετατρεπομένη εταιρία περιορισμένης ευθύνης συνεχίζεται με τον τύπο της ανωνύμου εταιρίας.

Αρθρο 42

Ολοι οι εδώ συμβαλλόμενοι δηλώνουν ότι αποδέχονται ρητά και ανεπιφύλακτα την εις την εκ της μετατροπής ιδρυομένη ανώνυμη εταιρία με την επωνυμία «ΚΑΡΚΑΝΙΑΣ-ΤΕΧΝΟΛΟΓΙΑ ΠΕΡΙΒΑΛΛΟΝΤΟΣ ΑΝΩΝΥΜΗ ΕΤΑΙΡΙΑ» εισφορά και μεταβίβαση όλων των παραπάνω αναφερθέντων περιουσιακών στοιχείων πάσης φύσεως καθώς και

"Intertranslations Ltd"
Intertranslations Translations Single Member
Limited Liability Company
Translation Services, Internet Services, Document Data Processing
4 El. Venizelou Street, Kallithea, Greece 17676
VAT No: EL095730866, Tax Office: A' KALLITHEA
Tel: +30 210 922 5000

GEORGIOS KARKANIAS
PRESIDENT

03/12/18

όλα τα ανωτέρω εκτεθέντα και ότι παραιτούνται ρητά και ανεπιφύλακτα παντός δικαιώματος και κάθε αγωγής ή ενστάσεως για προσβολή ή διάρρηξη του παρόντος και της δια τούτου γενομένης μετατροπής για οποιονδήποτε τυπικό ή ουσιαστικό λόγο και αιτία, καθώς και για τους λόγους που αναφέρονται στα άρθρα 178, 179 και 388 του Α.Κ.

Αρθρο 43

Οι συμβαλλόμενοι δίνουν ανέκκλητη εντολή και πληρεξουσιότητα στον Νικόλαο Μηλιώνη (ΑΦΜ 010259482) δικηγόρο, κάτοικο Λάρισας, ώστε αυτός ενεργώντας μόνος, να υποβάλει το Καταστατικό αυτό για έγκριση στην αρμοδία Νομαρχία και να τους εκπροσωπεί στην Αρχή αυτή, καθώς και να καταρτίσει και υπογράψει ως αντιπρόσωπός τους συμβολαιογραφικό έγγραφο με το οποίο να αναπληρώνονται παραλείψεις και να διορθώνονται παραδρομές και ακόμη να συμπληρώνονται ή να τροποποιούνται οι διατάξεις του καταστατικού ελεύθερα κατά την κρίση του.

Προσαρτώνται στο παρόν:

1) σύμφωνα με το άρθρο 81 του Ν.2238/94 σχετική δήλωση της Β' Δ.Ο.Υ. Λάρισας και 2) υπεύθυνες δηλώσεις των συμβαλλομένων του Ν.1599/86 σύμφωνα με το άρθρο 3 παρ. 15 του Ν.2242/94, 3) σύμφωνα με την παρ. 2 άρθρο 32 του Ν.2459/97 σχετική δήλωση της Β Δ.Ο.Υ. Λάρισας, 4) σχετική δήλωση σύμφωνα με τις

"Intertranslations Ltd"
Intertranslations Translations Single Member
Limited Liability Company
Translation Services, Internet Services, Document Data Processing
4 El. Venizelou Street, Kallithea, Greece 17676
VAT No: EL095730866, Tax Office: A' KALLITHEA
Tel: +30 210 922 5000

GEORGIOS KARKANIAS
PRESIDENT

03/12/18

διατάξεις του Ν.2130/93, 5) σχετική φορολογική ενημερότητα της πωλήτριας εταιρίας, 6) σχετική ασφαλιστική ενημερότητα σύμφωνα με τις διατάξεις του άρθρου 3 παρ. 1 της υπ' αρ. Φ21/116/2000 αποφάσεως του Υπουργού Εργασίας και Κοινωνικών Ασφαλίσεων, 7) δήλωση του Ν.1599/86 σύμφωνα με τις διατάξεις του άρθρου 65 του Ν.2538/97 και 8) αντίγραφα των υπ' αριθμ. 105/1989 και 266/1997 αδειών ανεγέρσεως των άνω κτιρίων, σύμφωνα με τις διατάξεις του Ν.1337/1983.

Για την εισφορά των ως άνω ακινήτων υποβλήθηκαν στην Β Δ.Ο.Υ. Λάρισας οι υπ' αριθμ. 792/2001 και 793/2001 δηλώσεις φόρου μεταβιβάσεως που κρίθηκαν αρνητικές βάσει του Ν.2166/93.

Εγώ η Συμβολαιογράφος θύμισα στους συμβαλλομένους: 1) τις διατάξεις του Α.Κ. για την μεταγραφή του συμβολαίου αυτού και τις συνέπειες της παράλειψής τους 2) τις διατάξεις του Ν.1587/1950 όπως ισχύει σήμερα και τις κυρώσεις για την παράβασή τους, 3) τις διατάξεις των νόμων «περί σχεδίου πόλεως», 4) την ευθύνη και υποχρέωση και των δύο να καταβάλουν τους φόρους και τα τέλη του εισφερομένου της τελευταίας τριετίας (Ν.4045/50) και 5) τις διατάξεις του Ν.Δ.

"Intertranslations Ltd"
Intertranslations Translations Single Member Limited Liability Company
Translation Services, Internet Services, Document Data Processing
4 El. Venizelou Street, Kallithea, Greece 17676
VAT No: EL095730866, Tax Office: A' KALLITHEA
Tel: +30 210 922 5000

GEORGIOS KARKANIAS
PRESIDENT

03/12/18

1003/1971 του Ν.651/1977 και του Ν.1337/1983.

Αρθρο 44

Γίνεται μνεία ότι: 1) Οι συμβαλλόμενοι μου δήλωσαν υπευθύνως και εν γνώσει των συνεπειών του Ν.1599/1986 ότι τη μόνιμη κατοικία και διαμονή τους είναι αυτή που αναφέρεται στην αρχή του παρόντος συμβολαίου, 2) για την σύσταση της παρούσης εταιρίας θέλουν καταβληθεί για έξοδα παράστασης δικηγόρου δραχμές ------ και 3) Υπενθύμισα στους συμβαλλομένους τις διατάξεις του Εμπορικού Νόμου, του Κωδικοποιημένου Νόμου 2190/1920 ως ισχύει, του Προεδρικού Διατάγματος 409/12-11-1986, 498/87 και του Νόμου 1675/23-12-1986 καθώς και ότι μετά την καταχώρηση στο Μητρώο Ανωνύμων Εταιριών από την αρμόδια εποπτεύουσα Αρχή της διοικητικής απόφασης παροχής αδείας σύστασης της παρούσης εταιρίας και έγκριση του καταστατικού αυτής της οποίας σχετική ανακοίνωση πρέπει να δημοσιευθεί στο Τεύχος ΑΕ και ΕΠΕ της Εφημερίδας της Κυβερνήσεως σύμφωνα με τις διατάξεις του Κ.Ν. 2190/1920 όπως ισχύει.

Το συμβόλαιο αυτό συντάχθηκε σε σχέδιο από τον Δικηγόρο Νικόλαο Μηλιώνη, κάτοικο Λάρισας, με ΑΦΜ 010259482. Η αμοιβή του παραπάνω δικηγόρου καταβλήθηκε στο Ταμείο του Δικηγορικού Συλλόγου Λάρισας, όπως αυτό προκύπτει από το υπ' αριθμόν 70309/01 γραμμάτιο εισπράξεως του Δικηγορικού Συλλόγου Λάρισας,

"Intertranslations Ltd"
Intertranslations Translations Single Member
Limited Liability Company
Translation Services, Internet Services, Document Data Processing
4 El. Venizelou Street, Kallithea, Greece 17676
VAT No: EL095730868, Tax Office: A' KALLITHEA
Tel: +30 210 9[illegible]22-5000

GEORGIOS KARKANIAS
PRESIDENT

03/12/18

που προσαρτάται στο παρόν. Η συνολική δαπάνη για την σύσταση της εκ μετατροπής ανωνύμου εταιρίας ανέρχεται σε δραχμές 1.240.100.

Οι παραπάνω δηλώσεις των συμβαλλομένων καταχωρήθηκαν στο συμβόλαιο αυτό που γράφηκε σε σαράντα έξι (46) φύλλα χαρτιού. Τα τέλη και δικαιώματά μου με ένα αντίγραφο είναι δραχμές 212.100 από τις οποίες δραχμές 62.500 για το Ταμείο Νομικών.

Το συμβόλαιο αυτό διαβάστηκε καθαρά και μεγαλόφωνα στους συμβαλλομένους και στον δικηγόρο που παραστάθηκε, οι οποίοι το άκουσαν, το βεβαίωσαν, συμφώνησαν στο περιεχόμενο και το υπέγραψαν αυτοί και εγώ η Συμβολαιογράφος όπως ο νόμος ορίζει.

ΟΙ ΣΥΜΒΑΛΛΟΜΕΝΟΙ Ο ΠΑΡΑΣΤΑΣ ΔΙΚΗΓΟΡΟΣ

Η ΣΥΜΒΟΛΑΙΟΓΡΑΦΟΣ

(Τ.Σ.) ΕΛΕΝΗ ΡΟΜΟΣΙΟΥ - ΚΛΕΙΤΣΑΚΗ
Ακριβές Αντίγραφον
Λάρισα σύθημερόν
Συμβολαιογράφος Λάρισας

"Intertranslations Ltd"
Intertranslations Translations Single Member
Limited Liability Company
Translation Services, Internet Services, Document Data Processing
4 El. Venizelou Street, Kallithea, Greece 17676
VAT No: EL095730866, Tax Office: A' KALLITHEA
Tel: +30 210 922 5000

GEORGIOS KARKANIAS
PRESIDENT

03/12/18

(national emblem)

OFFICIAL GAZETTE OF THE HELLENIC REPUBLIC

Issue for Public Limited Companies (S.A) & Limited Liability Companies

Sheet No 2393

April 30th, 2001

TABLE OF CONTENTS

PUBLIC LIMITED COMPANIES (S.A.)

Articles of Association

[……..]

Communication of the Registration at the Public Limited Companies Register of the Public Limited Company named „KARKANIAS ENVIRONMENTAL TECHNOLOGY S.A. „ and entitled „KARKANIAS"..... 2

[…….]

(2)

Communication of the Registration at the Register for Public Limited Companies of the Public Limited Company named „KARKANIAS ENVIRONMENTAL TECHNOLOGY S.A. „ and entitled „KARKANIAS"

THE PREFECT OF LARISSA

On April 12nd 2001 the Public Limited Company under the name „KARKANIAS ENVIRONMENTAL TECHNOLOGY S.A." and the title ‚KARKANIAS" , along with the under the No K1009/12.4.2001 Decision of Larissa's Prefect including the authorisation to form the abovementioned Company and the approval of its Articles of Association, were registered to the Public Limited Companies Register of our Prefecture under the Register No 48779/31/B/01/12. The Company's Articles of Association were drafted in the under the No 21180/10.4.2001 Notorial Act of Mrs Eleni-Eugenia Romosiou-Kleitsaki, Notary Public of Larissa.

Briefing of the Company's Articles of Association:

Company Name: „KARKANIAS ENVIRONMENTAL TECHNOLOGY S.A.".

Title: „KARKANIAS"

Registered Office: Municipality of Makrychori (Industrial Area of Larissa)

Purpose: To study, construct and install systems and machinery for liquid and solid waste purification and treatment and for water purification as well. To trade, import and export these systems.

Duration: 50 years

Amount and payment of the share capital: Total payment of 200.000.000 drachmas or 586.940,57 euros according to Art. 35 of the Company's Articles of Association.

GEORGIOS KARKANIAS
PRESIDENT

03/12/18

AZARIDI
412 22
ICE
030 2410 257252
@gmail.com

More specifically:

Share Capital of „A. KARKANIAS L.L.C." on 31.12.2000: 200.000.000 drachmas.

Shares: 200.000 nominal and blocked shares of 1.000 drachmas or 2,93 euros nominal value.

Expiration date of the corporate year: 31.12.2001

Board of Directors and Term of Office:

3 up to 7 members. 5-year term.

First Board of Directors and Term of Office (31.12.2005):

1. Apostolos Karkanias, son of Georgios, ID Card No: Ξ 697569/85, as Chairman.
2. Stamatia Karkania, spouse of Apostolos Karkanias, ID Card No: Ξ 697568/85, as Vice- Chairman.
3. Nikolaos Romnios, son of Georgios, ID Card No: Π 941184/91, as Member.

Chairman Apostolos Karkanias and Vice-Chairman Stamatia Karkania, spouse of Apostolos, will both or seperately represent the Company. Their signature put under the Company's name will be binding for every corporate action.

Auditors of the First Year of the Company:

Ordinary Auditor

Christos Chiras, son of Georgios, Certified Public Accountant – Auditor, SOE Reg. No: 15241.

Extraordinary Auditor

Sofia Stathopoulou, daughter of Dimitrios, Certified Public Accountant – Auditor, SOE Reg. No: 14751.

Larissa, April 24th, 2001
By Order of the Prefect,
The Director
AST. KAZLARIS

[.....]

DESPINA CH. LAZARIDI
ROOSVELT ST. 14 PC 412 22
ROOSVELT ST. 14 PC 412 22
TEL. 0030 2410 257252 FAX: 0030 2410 257252
email: lazaridi@gmail.com

GEORGIOS KARKANIAS
PRESIDENT

03/12/18

AZARIDI
R
PC
REECE
0030 24
gmail.com

Certified true and exact translation from Greek to English of the attached certified true original document issued by the National Printing Office of Greek Republic , which I certificate.

Larissa, 21-08-2012

The lawyer who certificates

DESPINA CH. LAZARIDI
LAWYER
ROOSVELT ST. 24, PC 412 22
LARISSA, GREECE
TEL.: 0030 2410 257247 - FAX: 0030 2410 257252
email: dlazaridi@gmail.com

GEORGIOS KARKANIAS
PRESIDENT

03/12/12

OFFICIAL TRANSLATION FROM THE GREEK LANGUAGE

(national emblem)
HELLENIC REPUBLIC
REGION OF THESSALY
GENERAL DIRECTORATE OF DEVELOPMENT
DEPARTMENT OF COMMERCE AND TOURISM

Larissa, 10/01/2014
File No: 58

Postal Address: Building "Dioikitirio", Larissa
Postal Code: 411-10
Info: Christina Giagkou
Tel: (+30) 2413506366-375
Fax: (+30) 2410537107
email: emporio@larissa.gr

To: 1) Chamber of Larissa
44, Papakyriazi Str.
GR-412 22, Larissa
2) KARKANIAS ENVIRONMENTAL TECHNOLOGY S.A.
Industrial Zone of Larissa, PO Box : 1607
GR- 41002, Prefecture of Larissa,
Municipality of Tempi

SUBJECT: Modifications of Articles of Association

We hereby certify that as per the file of the Public Limited Company with the name **"KARKANIAS ENVIRONMENTAL TECHNOLOGY S.A."** and the short title **"KARKANIAS"**, Reg. No. **48779/31/B/01/12**, Registered Seat: Municipality of Tempi (Industrial Zone of Larissa, PO Box: 1607, GR – 41002, Larissa) which had been kept in our Service until the 31st of December 2012:

1. The Articles of Association of the aforementioned company have been approved and registered at the Register of Public Limited Companies of our Service on 12/04/2001 following our Modification Decision No: K1009/12-4-2001. **After the Extraordinary General Assembly of the Company's Shareholders on 24/5/2012, the Articles of Association have been unified in a single text and they were not modified until the 31/12/2012**.
2. No Minutes of the Company's General Assembly which include a decision for the Company's dissolution or liquidation have been submitted to our Service.
3. The Operation Licence of the Company had not been revoked until the 31/12/2012.

From 01/01/2013, all information concerning the Public Limited Companies of Larissa are provided by the ΓΕΜΗ Service of the Chamber of Larissa, at 44, Papakyriazi Street.

This certificate is issued upon request of the Company for all legal intents and purposes.

The Head of the Department
p.p.
Xenofon Anastasiadis
Mechanical Engineer

[official stamp of the Hellenic Republic]
True Copy of the Original Document
Larissa, //.
The Head Secretary
p.p.
Angeliki Krestou

GEORGIOS KARKANIAS
PRESIDENT

03/12/18

OFFICIAL TRANSLATION FROM THE GREEK LANGUAGE

I, the undersigned certified translator, do hereby certify that the foregoing is a true translation of the attached Greek document, pursuant to Presidential Decree No.169/17.6.2002.

Larissa, 19/04/17

KONSTANTINA MICHAILAKI
Certified Translator
Ionian University Graduate
1, Marinou Antypa str., GR-412 22
Larissa - Tel. +30 2410 549996
Tax ID 066330544

Decision No 121/05
Corfu Court of First Instance

GEORGIOS KARKANTAS
PRESIDENT

03/12/18

ΕΛΛΗΝΙΚΗ ΔΗΜΟΚΡΑΤΙΑ
ΠΕΡΙΦΕΡΕΙΑ ΘΕΣΣΑΛΙΑΣ
ΓΕΝΙΚΗ ΔΙΕΥΘΥΝΣΗ ΑΝΑΠΤΥΞΗΣ
ΔΙΕΥΘΥΝΣΗ ΑΝΑΠΤΥΞΗΣ Π.Ε. ΛΑΡΙΣΑΣ
ΤΜΗΜΑ ΕΜΠΟΡΙΟΥ ΚΑΙ ΤΟΥΡΙΣΜΟΥ

Λάρισα, 10/01/2014
Αριθ. Πρωτ. : 58

Ταχ. Δ.νση : ΔΙΟΙΚΗΤΗΡΙΟ, ΛΑΡΙΣΑ
Ταχ. Κώδικα : 411-10
Πληροφορίες : ΧΡΙΣΤΙΝΑ ΓΙΑΓΚΟΥ
Τηλέφωνο : 2413506366-375
Αρ. συσκ. Τηλ/πίας (φαξ) : 2410537107
Ηλεκτρονική Διεύθυνση : emporio@larissa.gr

ΠΡΟΣ : 1) ΕΠΙΜΕΛΗΤΗΡΙΟ ΛΑΡΙΣΑΣ
ΠΑΠΑΚΥΡΙΑΖΗ 44
Τ.Κ.41222 ΛΑΡΙΣΑ
2) ΚΑΡΚΑΝΙΑΣ
ΤΕΧΝΟΛΟΓΙΑ
ΠΕΡΙΒΑΛΛΟΝΤΟΣ
ΑΝΩΝΥΜΗ ΕΤΑΙΡΙΑ
ΒΙ.ΠΕ. Λάρισας Τ.Θ. 1607 ΤΚ :
41002 - ΛΑΡΙΣΑ
41002
Τεμπών

ΘΕΜΑ: Περί Κωδικοποίησης Καταστατικού

Βεβαιώνουμε ότι όπως προκύπτει από τον τηρούμενο στην Υπηρεσία μας, φάκελο μέχρι και τις 31/12/2012 της Ανωνύμου εταιρείας με την επωνυμία : **ΚΑΡΚΑΝΙΑΣ ΤΕΧΝΟΛΟΓΙΑ ΠΕΡΙΒΑΛΛΟΝΤΟΣ ΑΝΩΝΥΜΗ ΕΤΑΙΡΙΑ** και διακριτικό τίτλο **ΚΑΡΚΑΝΙΑΣ** αριθμό Μητρώου **48779/31/Β/01/12** και έδρα Τεμπών (ΒΙ.ΠΕ. Λάρισας Τ.Θ. 1607 ΤΚ : 41002 - ΛΑΡΙΣΑ)

1) Το καταστατικό της εγκρίθηκε με την υπ΄αριθμ . Μετατροπή Κ.1009/12-4-01 απόφασή μας η οποία καταχωρήθηκε στο μητρώο ΑΕ της υπηρεσία μας στις 12/04/2001. **Με την από 24/05/2012 Έκτακτη Γενική Συνέλευση των μετόχων το καταστατικό κωδικοποιήθηκε σε ενιαίο κείμενο και υποβλήθηκε στην υπηρεσία μας για το οποίο μέχρι και τις 31/12/2012 δεν έχει υποβληθεί στην υπηρεσία μας καμία τροποποίηση.**
2) Δεν μας έχει υποβάλει Πρακτικά Γενικής Συνέλευσης, από τα οποία να φαίνεται ότι έχει αποφασιστεί η λύση και η θέση της σε εκκαθάριση, και
3) Η άδεια σύστασης της δεν έχει ανακληθεί μέχρι και τις 31/12/2012.

Από 01/01/2013 και μετά για οποιαδήποτε πληροφορία-στοιχεία που αφορούν Ανώνυμες Εταιρείες παρακαλείσθε να απευθύνεστε στο Επιμελητήριο Λάρισας, Παπακυριαζή 44 – Υπηρεσία ΓΕΜΗ.

Την βεβαίωση αυτή χορηγούμε στην εταιρεία ύστερα από σχετική της αίτηση για κάθε νόμιμη χρήση.

Ε.Α.
Ο ΠΡΟΪΣΤΑΜΕΝΟΣ
ΤΟΥ ΤΜΗΜΑΤΟΣ
Α/Α

ΑΚΡΙΒΕΣ ΑΝΤΙΓΡΑΦΟ
ΛΑΡΙΣΑ .....
ΠΡΟΪΣΤΑΜΕΝΟΣ ΓΕΝ. ΔΙΕΥΘ.
Κρέστου Αγγελική

ΞΕΝΟΦΩΝ ΑΝΑΣΤΑΣΙΑΔΗΣ
Π.Ε. ΜΗΧΑΝΙΚΩΝ

GEORGIOS KARKANIAS
PRESIDENT

03/12/18

OFFICIAL TRANSLATION FROM THE GREEK LANGUAGE

(national emblem)
HELLENIC REPUBLIC
CHAMBER OF LARISSA
DEPARTMENT OF REGISTRY
GENERAL COMMERCIAL REGISTER SERVICE (ΓΕΜΗ Service)
Postal Address: 44, Papakyriazi Street
Postal Code: 41222
Info: ΓΕΜΗ Service
Tel: (+30) 2410 549 884, 2410 254738
Fax: (+30) 2410 257522
Email: info@larissa-chamber.gr

Digital Signature by: Larissa Chamber
on 09-03-2017, 14:44:24

Larissa, 09/03/2017
File No: 352553.498761

GENERAL CERTIFICATE

By virtue of the provisions of Codified Law 2190/20 and L. 3419/2005 still in force and of the Ministerial Decisions issued by delegation of the above Law, and, as per the records of the General Commercial Register Service (ΓΕΜΗ Service) of the Chamber of Larissa concerning the Company with the name: "KARKANIAS-ENVIRONMENTAL TECHNOLOGY S.A.", short-named: KARKANIAS, which has its Registered Office in the Larissa Municipality and which is registered at the ΓΕΜΗ Service with No: 26564640000,
we hereby certify the following:

1. The above Company was registered in the ΓΕΜΗ Service on 10.09.2012. Since then, the Company's Articles of Association have been modified twice with the following codes (ΚΑΚ):

Date of Registration	Registration Code (ΚΑΚ)
25/06/2014	213207
18/08/2016	728878

The formation of the Company and any modifications of the Company's Articles of Association which occurred before the registration of the Company in ΓΕΜΗ are presented in the attached document of the Regional Unit of Larissa, Directorate of Development, with Number 58/10-01-2014.

2. We also certify that:
   a. The Duration of the Company's operation has not ended yet.
   b. We have not received any decision of the Company's General Assembly aiming to the Company's solution or liquidation.
   c. Our Service has not received any petition, claim or Court's Decision demanding the dissolution of the Company, the appointment or replacement of a liquidator or co-liquidator, the forced receivership or the special liquidation

3. According to the Company's Articles of Association, the Company's shares are as follows:

Type of Shares	Nominal value	Total Number of shares
Nominal, Ordinary	4.05 Euro	332,460

GEORGIOS KARKANIAS
PRESIDENT
03/12/18

4. Furthermore, pursuant to Art. 6 par. 2 and Art. 11 par. 5 of L.3419/2005, and Art.8 of L.3588/2007, **no decision** to file a petition for bankruptcy or conciliation has been submitted to our Service. In addition, **no petition** for bankruptcy or conciliation has been filed before the competent Court of Justice.

Note: The above paragraph (concerning the bankruptcy, conciliation and creditors' payment) **does not substitute the certificate issued by the Bankruptcy Register of the Court of First Instance,** where all entities filing for bankruptcy or conciliation are registered, pursuant to Par. 3, Art. 8 of L.3588/2007 still in force.

This certificate is issued upon request of KARKANIAS ENVIRONMENTAL TECHNOLOGY S.A. for the Company's legal intents and purposes exclusively.

The ΓΕΜΗ Service of the
Chamber of Larissa

The authenticity of this certificate can be checked in the following link:
http://services.businessportal.gr/publicCertificateDownload/form

****

I, the undersigned certified translator, do hereby certify that the foregoing is a true translation of the attached Greek document.
(Presidential Decree No 169/17.6.2002)
Larissa, 19/04/17

Decision No 121/05
Corfu Court of First Instance

GEORGIOS KARKANIAS
PRESIDENT

03/12/10

ΕΛΛΗΝΙΚΗ ΔΗΜΟΚΡΑΤΙΑ
ΕΠΙΜΕΛΗΤΗΡΙΟ ΛΑΡΙΣΑΣ
ΤΜΗΜΑ: ΜΗΤΡΩΟΥ / Υπηρεσία Γ.Ε.ΜΗ.
Δ/ νση: Παπακυριαζή 44
Τ.Κ.: 41222
Πληροφορίες: Υπηρεσία Γ.Ε.ΜΗ.
Τηλέφωνο: 2410 549884, 254738
Fax: 2410 257522
E-mail: info@larissa-chamber.gr

Λάρισα, 09/03/2017
Αριθ.Πρωτ.: 352553.498761

ΓΕΝΙΚΟ ΠΙΣΤΟΠΟΙΗΤΙΚΟ

Πιστοποιούμε, όπως προκύπτει από τα καταχωρισμένα και τηρούμενα δυνάμει των διατάξεων του Κ.Ν.2190/20 ως και του ν. 3419/2005 ως ισχύουν, καθώς και των κατ' εξουσιοδότηση των νόμων αυτών εκδοθεισών υπουργικών αποφάσεων, στην Υπηρεσία Γ.Ε.ΜΗ. του Επιμελητηρίου μας στοιχεία, της Ανώνυμης Εταιρείας με την επωνυμία ΚΑΡΚΑΝΙΑΣ-ΤΕΧΝΟΛΟΓΙΑ ΠΕΡΙΒΑΛΛΟΝΤΟΣ ΑΝΩΝΥΜΗ ΕΤΑΙΡΙΑ, τον διακριτικό τίτλο ΚΑΡΚΑΝΙΑΣ, που εδρεύει στο Δήμο ΛΑΡΙΣΑΣ / ΛΑΡΙΣΑΣ και είναι καταχωρισμένη στο Γενικό Εμπορικό Μητρώο με αριθμό Γ.Ε.ΜΗ. 26564640000, ότι:

1. Στο Γενικό Εμπορικό Μητρώο (Γ.Ε.ΜΗ.) εγγράφηκε στις 10/09/2012 και έκτοτε έχουν γίνει οι παρακάτω τροποποιήσεις καταστατικού που καταχωρίσθηκαν στο Γ.Ε.ΜΗ. ως ακολούθως:

Ημερομηνία Καταχώρισης	Κωδικός Αριθμός Καταχώρισης
25/06/2014	213207
18/08/2016	728878

Όσον αφορά τη σύσταση και τις τροποποιήσεις καταστατικού της ως άνω εταιρείας προ της εγγραφής της στο Γ.Ε.ΜΗ., τα σχετικά στοιχεία περιλαμβάνονται στο με αρ. πρωτ. 58/10-01-2014 έγγραφο της Διεύθυνσης Ανάπτυξης της ΠΕ Λάρισας το οποίο αποτελεί αναπόσπαστο μέρος του παρόντος.

2. Επίσης βεβαιώνουμε ότι

α) δεν έχει παρέλθει ο εκ του καταστατικού ορισμένος χρόνος διάρκειας της

β) δεν έχει καταχωρισθεί στη Μερίδα της εταιρείας στο ΓΕΜΗ, απόφαση Γενικής Συνέλευσης για λύση της εταιρείας & θέση αυτής σε εκκαθάριση.

γ) δεν έχει περιέλθει στην Υπηρεσία μας για να καταχωρισθεί στη Μερίδα της εταιρείας στο ΓΕΜΗ αίτηση, αγωγή ή δικαστική απόφαση για λύση της εταιρείας και διορισμό ή αντικατάσταση εκκαθαριστή ή συν-εκκαθαριστή, ούτε απόφαση που να τη θέτει υπό αναγκαστική διαχείριση ή ειδική εκκαθάριση.

3. Οι μετοχές της εταιρείας με βάση το ισχύον καταστατικό της είναι:

Τύπος Μετοχών	Ονομαστική Αξία Μετοχής	Πλήθος Μετοχών
Ονομαστικές, Κοινές	4.05 Euro	332.460

1. **Επίσης μέχρι σήμερα δεν έχει περιέλθει στην υπηρεσία μας προκειμένου να σημειωθεί στο ΓΕΜΗ** (σύμφωνα με το

GEORGIOS KARKANIAS
PRESIDENT

03/12/18

άρθρο 6 παρ. 2 και άρθρο 11 παρ. 5 του Νόμου 3419/2005 και το άρθρο 8 του νόμου 3588/2007, όπως έχουν τροποποιηθεί και ισχύει) **απόφαση** που να την κηρύσσει σε κατάσταση πτώχευσης ή σε διαδικασία συνδιαλλαγής/εξυγίανσης **ούτε αίτηση** προς το αρμόδιο Δικαστήριο για να κηρυχθεί σε κατάσταση πτώχευσης ή διαδικασίας συνδιαλλαγής/εξυγίανσης.

Σημειώνεται ότι : Με τα ανωτέρω περί «πτώχευσης ή διαδικασίας συνδιαλλαγής/εξυγίανσης» πιστοποιούμενα, **δεν υποκαθίσταται το πιστοποιητικό που εκδίδεται από το Μητρώο Πτωχεύσεων του Πρωτοδικείου**, στο οποίο καταχωρίζονται «αυτοί που κηρύχθηκαν σε πτώχευση ή ζητήθηκε το άνοιγμα της διαδικασίας συνδιαλλαγής» (σύμφωνα με την παρ. 3 του άρθρου 8 του Νόμου 3588/2007 όπως ισχύει).

Την βεβαίωση αυτή χορηγούμε ύστερα από σχετική αίτηση του / της ΚΑΡΚΑΝΙΑΣ-ΤΕΧΝΟΛΟΓΙΑ ΠΕΡΙΒΑΛΛΟΝΤΟΣ ΑΝΩΝΥΜΗ ΕΤΑΙΡΙΑ αποκλειστικά για δική του / της νόμιμη χρήση.

Η Υπηρεσία ΓΕΜΗ του

ΕΠΙΜΕΛΗΤΗΡΙΟΥ ΛΑΡΙΣΑΣ

Η γνησιότητα του παρόντος μπορεί να ελεγχθεί μέσω του ακόλουθου συνδέσμου https://services.businessportal.gr/publicCertificateDownload/form

GEORGIOS KARKANIAS
PRESIDENT

03/12/18

CHAMBER
Of Larissa

HELLENIC REPUBLIC
CHAMBER OF LARISSA
DEPARTMENT: REGISTRY / G.E.MI. Service
Address: Papakyriazi 44
P.C.: 41222
Info: G.E.MI. Service
Telephone: 2410-549884,254738
Fax: 2410 257522
E-mail: info@larissa-chamber.gr

Larissa, 05/07/2017
Prot. No. 417103.591335

REPRESENTATION CERTIFICATE

We certify, as it results from the registered and kept data according to the provisions of the R.L. 2190/20 as well as of the l. 3419/2005 as in force, as well as of the ministerial decisions issued by authorization of these laws, in the G.E.MI. Service of our Chamber, of the Anonymous Society with the denomination KARKANIAS ENVIRONMENTAL TECHNOLOGY ANONYMOUS SOCIETY, with the distinctive title KARKANIAS, located in the municipality of LARISSA / LARISSA and registered in the General Commercial Registry with G.E.MI. Number 26564640000, that:

The composition of the Board of Directors and the representation of the company results from the following registrations and the announcement 727949/20-12-2016 which is attached.

Date of registration	Registration code number[1]
20/12/2016	861643
20/12/2016	861644

This certificate is issued after the relative application of KARKANIAS ENVIRONMENTAL TECHNOLOGY ANONYMOUS SOCIETY exclusively for its own legal use.

The GEMI Service
of the CHAMBER OF LARISSA

The authenticity of the present can be checked through the following link https://services.businessportal.gr/publicCertificateDownload/form

[1] In the case that the Registration Code Number is not filled, the valid representation results from the registration of the company in the GEMI that took place according to the provisions of the Ministerial Decision K1-941 (GG B 1468/2012). In these cases the registration date in GEMI is indicated as the registration date.

GEORGIOS KARKANIAS
PRESIDENT

03/12/18

HELLENIC REPUBLIC
CHAMBER OF LARISSA
DEPARTMENT: REGISTRY / G.E.MI. Service
Address: Papakyriazi 44
P.C.: 41222
Info: BIZIOU STELLA
Telephone: 2410254738
Fax: 2410 257522
E-mail: mitroo@larissa-chamber.gr

Larissa, 20/12/2016
Prot. No.727949

ANNOUNCEMENT

For the registration in the General Commercial Registry of the data of the anonymous society with the denomination **"KARKANIAS ENVIRONMENTAL TECHNOLOGY ANONYMOUS SOCIETY".**

On **20/12/2016** the following details were registered in the General Commercial Registry (G.E.MI.) of the Anonymous Society with the denomination **"KARKANIAS ENVIRONMENTAL TECHNOLOGY ANONYMOUS SOCIETY"** and Number **G.E.MI. 26564640000** (former Ar. MAE 48779/31/B/01/12):

a) With Registration Code Number **861643** the decision from 14/12/2016 of the shareholders General Assembly according to which a new Board of Directors of the company was elected.

b) With Registration Code number **861644** the company's Board of Directors Minutes from 14/12/2016 according to which the New Board of Directors, elected by the above General Assembly, was established as follows:

KARKANIAS GEORGIOS of **APOSTOLOS**, resident of LARISSA, address FARMAKI 3, PC 41222 with ID No.: AK407117 and TIN: 117333686 (PFS: A' of LARISSA) as **President**

KARKANIAS CHRISTOS of **APOSTOLOS**, resident of LARISSA, address FARMAKI 3, PC 41222 with ID No.: AM363854 and TIN: 140445508 (PFS: A' of LARISSA) as **Vice-president**

KARKANIA VASILIKI of **APOSTOLOS** resident of LARISSA, address FARMAKI 3, PC 41222 with ID No.: AK407175 and TIN: 128996162 (PFS: A' of LARISSA) as **Managing Director**

KARKANIA STAMATIA of **CHRISTOS** resident of LARISSA, address FARMAKI 3, PC 41222 with ID No.: AK407174 and TIN: 063983574 (PFS: A' of LARISSA) as **Member of the BoD**

The tenure of the above Board of Directors ends on 13/12/2021

GEORGIOS KARKANIAS
PRESIDENT

03/12/18

C) The Board of Directors assigned the company's representation and commitment right to the following:

REPRESENTATION

The company's representation and commitment rights were analytically assigned as follows:

REPRESENTATION OF THE COMPANY

The Board of Directors according to the Memorandum, assigns to the President of the BoD Mr. Karkanias Georgios, to the Vice-president Karkanias Christos, to the Managing Director Mrs. Karkania Vasiliki as well as the member of the Board of Directors Mrs. Karkania Stamatia the execution of these rights to their total.

It also assigns all the members of the Board of Directors, individually or jointly to represent the company in any Public or Private Law Legal Entity tender, anywhere where it will take place and for any project.

PROVISION OF THE RIGHT TO SIGN

Then the Board of Directors unanimously provides, according to the article of the Memorandum, the right to Mr. Karkanias Georgios, President of the Bod, to the Vice-president Mr. Christos Karkanias, to the managing directors Mrs. Karkania Vasiliki as well as the member of the Board of Directors Mrs. Karkania Stamatia to represent and commit the company with only the signature each one separately under the seal of the company for actions such as: a) collection of money, payment of cheques b) withdrawal of money, securities, receipts dividends, interest warrants c) issue, endorsement of cheques d) issue, acceptance, endorsement, prepayment of securities, promissory notes e) reception of bills of lading f) opening of bills of credit g) collecting of bills of lading with secured advance h) loan and credit contracts i) reception of loans and use of credit j) provision of security interest on movables, undertaking of collateral k) provision of real guarantee on real estate l) issue of guarantee letters for the company, exemption of them m) guarantee for third parties n) leasing and use of strong boxes and dissolution of leases o) any other transaction relating to the company p) to appoint an attorney in order to 1) advance to withdrawal of money from any company bank account, 2) to advance to acts of replacement and representation of the president, vice-president, managing director and member, if needed, 3) to advance to purchases of real estate.

Relative audit document of the RU of Larissa (prot .no.727949/19/12/2016).
After the approval of the Legal Adviser

By order of the President of the Chamber
(signature, seal)

The authenticity of the present can be verified by https://www.businessregistry.gr/publicity.aspx

GEORGIOS KARKANIAS
PRESIDENT

03/12/18

Exact Translation from the attached Greek Original

Larissa 07/07/2017

The official translator

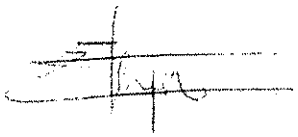

Sokratis Kyriazis

NETWORK OF TRANSLATION CENTERS
ERMINIA
SOKRATIS KYRIAZIS
TEL. & FAX 2410 626055
VAT 045564280

GEORGIOS KARKANIAS
PRESIDENT

03/12/18

ΕΠΙΜΕΛΗΤΗΡΙΟ
ΛΑΡΙΣΑΣ

Ψηφιακά υπογεγραμμένο από ΑΝΝΑ ΣΑΡΗΜΑΝΑ
Ημερομηνία: 2017.07.05 10:28:30 EEST
Αιτία: ΣΕΦΚΟ ΕΜΠΟΡΙΚΟ

ΕΛΛΗΝΙΚΗ ΔΗΜΟΚΡΑΤΙΑ
ΕΠΙΜΕΛΗΤΗΡΙΟ ΛΑΡΙΣΑΣ
ΤΜΗΜΑ: ΜΗΤΡΩΟΥ / Υπηρεσία Γ.Ε.ΜΗ.
Δ/νση: Παπακυριαζή 44
Τ.Κ.: 41222
Πληροφορίες: Υπηρεσία Γ.Ε.ΜΗ.
Τηλέφωνο: 2410-549884,254738-
Fax: 2410 257522
E-mail: info@larissa-chamber.gr

Λάρισα, 05/07/2017
Αριθ.Πρωτ.: 417103.591335

ΠΙΣΤΟΠΟΙΗΤΙΚΟ ΕΚΠΡΟΣΩΠΗΣΗΣ

Πιστοποιούμε, όπως προκύπτει από τα καταχωρισμένα και τηρούμενα δυνάμει των διατάξεων του Κ.Ν.2190/20 ως και του ν. 3419/2005 ως ισχύουν, καθώς και των κατ' εξουσιοδότηση των νόμων αυτών εκδοθεισών υπουργικών αποφάσεων, στην Υπηρεσία Γ.Ε.ΜΗ. του Επιμελητηρίου μας στοιχεία, της Ανώνυμης Εταιρείας με την επωνυμία ΚΑΡΚΑΝΙΑΣ-ΤΕΧΝΟΛΟΓΙΑ ΠΕΡΙΒΑΛΛΟΝΤΟΣ ΑΝΩΝΥΜΗ ΕΤΑΙΡΙΑ, τον διακριτικό τίτλο ΚΑΡΚΑΝΙΑΣ, που εδρεύει στο Δήμο ΛΑΡΙΣΑΣ / ΛΑΡΙΣΑΣ και είναι καταχωριμένη στο Γενικό Εμπορικό Μητρώο με αριθμό Γ.Ε.ΜΗ. 26564640000, ότι:

Η σύνθεση του Διοικητικού Συμβουλίου και η εκπροσώπησή της εταιρείας προκύπτει από τις κάτωθι καταχωρίσεις και την727949/20-12-2016 ανακοίνωση που επισυνάπτεται.

Ημερομηνία Καταχώρισης	Κωδικός Αριθμός Καταχώρισης[1]
20/12/2016	861643
20/12/2016	861644

Το πιστοποιητικό αυτό χορηγείται ύστερα από σχετική αίτηση του / της ΚΑΡΚΑΝΙΑΣ-ΤΕΧΝΟΛΟΓΙΑ ΠΕΡΙΒΑΛΛΟΝΤΟΣ ΑΝΩΝΥΜΗ ΕΤΑΙΡΙΑ αποκλειστικά για δική του / της νόμιμη χρήση.

Η Υπηρεσία ΓΕΜΗ του

ΕΠΙΜΕΛΗΤΗΡΙΟΥ ΛΑΡΙΣΑΣ

Η γνησιότητα του παρόντος μπορεί να ελεγχθεί μέσω του ακόλουθου συνδέσμου https://services.businessportal.gr/publicCertificateDownload/form

GEORGIOS KARKANIAS
PRESIDENT

[1] Σε περίπτωση που δεν συμπληρώνεται Κωδικός Αριθμός Καταχώρισης η ισχύουσα εκπροσώπηση προκύπτει από την εγγραφή της εταιρίας στο ΓΕΜΗ πού έγινε βάσει των διατάξεων της Υπουργικής Απόφασης Κ1-941(ΦΕΚ Β 1468/2012). Στις περιπτώσεις αυτές ως ημερομηνία καταχώρισης αναγράφεται η ημερομηνία εγγραφής στο ΓΕΜΗ.

03/12/18

ΕΛΛΗΝΙΚΗ ΔΗΜΟΚΡΑΤΙΑ

ΕΠΙΜΕΛΗΤΗΡΙΟ ΛΑΡΙΣΑΣ
ΤΜΗΜΑ: ΜΗΤΡΩΟΥ / Υπηρεσία Γ.Ε.ΜΗ.
Δ.νση: Παπακυριαζή 44
Τ.Κ.: 41222
Πληροφορίες: BIZIOU STELLA
Τηλέφωνο: 2410254738
Fax: 2410 257522
E-mail: mitroo@larissa-chamber.gr

Λάρισα, 20/12/2016
Αριθ.Πρωτ.: 727949

ΑΝΑΚΟΙΝΩΣΗ

Καταχώρισης στο Γενικό Εμπορικό Μητρώο στοιχείων της ανώνυμης εταιρείας με την επωνυμία **«ΚΑΡΚΑΝΙΑΣ-ΤΕΧΝΟΛΟΓΙΑ ΠΕΡΙΒΑΛΛΟΝΤΟΣ ΑΝΩΝΥΜΗ ΕΤΑΙΡΙΑ».**

Την **20/12/2016** καταχωρίσθηκαν στο Γενικό Εμπορικό Μητρώο (Γ.Ε.ΜΗ.), τα κατωτέρω στοιχεία της Ανώνυμης Εταιρείας με την επωνυμία **«ΚΑΡΚΑΝΙΑΣ-ΤΕΧΝΟΛΟΓΙΑ ΠΕΡΙΒΑΛΛΟΝΤΟΣ ΑΝΩΝΥΜΗ ΕΤΑΙΡΙΑ»** και Αριθμό **Γ.Ε.ΜΗ 26564640000** (πρώην Αρ.ΜΑΕ 48779/31/Β/01/12):

α) Με Κωδικό Αριθμό Καταχώρισης **861643** η από 14/12/2016 απόφαση της Γενικής Συνέλευσης των μετόχων της σύμφωνα με την οποία εκλέχθηκε νέο Διοικητικό Συμβούλιο της εταιρείας.

β) Με Κωδικό Αριθμό Καταχώρισης **861644** το από 14/12/2016 πρακτικό του Διοικητικού Συμβουλίου της εταιρείας σύμφωνα με το οποίο το Διοικητικό Συμβούλιο, που εκλέχθηκε από την ανωτέρω Γενική Συνέλευση, συγκροτήθηκε σε σώμα ως εξής :

ΚΑΡΚΑΝΙΑΣ ΓΕΩΡΓΙΟΣ του **ΑΠΟΣΤΟΛΟΥ** που κατοικεί στο/η ΛΑΡΙΣΑ, Δ/νση ΦΑΡΜΑΚΗ 3, ΤΚ 41222 με ΑΔΤ: ΑΚ407117 και ΑΦΜ: 117333686 (ΔΟΥ: Α΄ΛΑΡΙΣΗΣ) ως **Πρόεδρος**

ΚΑΡΚΑΝΙΑΣ ΧΡΗΣΤΟΣ του **ΑΠΟΣΤΟΛΟΥ** που κατοικεί στο/η ΛΑΡΙΣΑ, Δ/νση ΦΑΡΜΑΚΗ 3, ΤΚ 41222 με ΑΔΤ: ΑΜ363854 και ΑΦΜ: 140445508 (ΔΟΥ: Α΄ΛΑΡΙΣΗΣ) ως **Αντιπρόεδρος**

ΚΑΡΚΑΝΙΑ ΒΑΣΙΛΙΚΗ του **ΑΠΟΣΤΟΛΟΥ** που κατοικεί στο/η ΛΑΡΙΣΑ, Δ/νση ΦΑΡΜΑΚΗ 3, ΤΚ 41222 με ΑΔΤ: ΑΚ407175 και ΑΦΜ: 128996162 (ΔΟΥ: Α΄ΛΑΡΙΣΗΣ) ως **Διευθύνων Σύμβουλος**

ΚΑΡΚΑΝΙΑ ΣΤΑΜΑΤΙΑ του **ΧΡΗΣΤΟΥ** που κατοικεί στο/η ΛΑΡΙΣΑ, Δ/νση ΦΑΡΜΑΚΗ 3, ΤΚ 41222 με ΑΔΤ: ΑΚ407174 και ΑΦΜ: 063983574 (ΔΟΥ: Α΄ΛΑΡΙΣΗΣ) ως **Μέλος Διοικ. Συμβουλίου**

Η θητεία του ανωτέρω Διοικητικού Συμβουλίου λήγει την 13/12/2021

γ) Το Διοικητικό Συμβούλιο χορήγησε δικαιώματα εκπροσώπησης και δέσμευσης της εταιρείας στους κάτωθι:

ΕΚΠΡΟΣΩΠΗΣΗ

Τα δικαιώματα εκπροσώπησης και δέσμευσης της εταιρείας χορηγήθηκαν αναλυτικά ως ακολούθως:

ΕΚΠΡΟΣΩΠΗΣΗ ΤΗΣ ΕΤΑΙΡΕΙΑΣ
Το Διοικητικό Συμβούλιο βάσει του άρθρου του καταστατικού αναθέτει στον Πρόεδρο του Δ.Σ. κ. Καρκανιά Γεώργιο, στον Αντιπρόεδρο Καρκανιά Χρήστο, στη Διευθύνων Σύμβουλο κα. Καρκανιά Βασιλική καθώς και στο μέλος του Διοικητικού Συμβουλίου κα. Καρκανιά Σταματία την ενάσκηση των δικαιωμάτων αυτών στο σύνολο.
Επίσης αναθέτει σε όλα τα μέλη του Διοικητικού Συμβουλίου *όπως ατομικά ή από κοινού να εκπροσωπούν την εταιρία σε* οποιονδήποτε διαγωνισμό Δημοσίου Νομικού προσώπου Δημοσίου ή Ιδιωτικού Δικαίου, οπουδήποτε και αν διενεργηθεί και για *οποιοδήποτε έργο.*

ΠΑΡΟΧΗ ΔΙΚΑΙΩΜΑΤΟΣ ΥΠΟΓΡΑΦΗΣ
Στη συνέχεια το Διοικητικό Συμβούλιο παρέχει παμψηφεί σύμφωνα με άρθρο του καταστατικού δικαίωμα στον κ. Καρκανιά Γεώργιο, Πρόεδρο του Δ.Σ.,στον Αντιπρόεδρο κ. Χρήστο Καρκανιά, στη Διευθύνων Σύμβουλο κα. Καρκανιά Βασιλική καθώς και στο μέλος του Διοικητικού Συμβουλίου κα. Καρκανιά Σταματία όπως εκπροσωπούν και δεσμεύουν την εταιρεία με μόνη την υπογραφή ο καθένας χωριστά κάτω από τη σφραγίδα της εταιρείας για πράξεις όπως :

GEORGIOS KARKANIAS
PRESIDENT

03/12/18

α) είσπραξη χρημάτων, εξόφληση επιταγών β) ανάληψη χρημάτων, χρηματογράφων, μερισματαποδείξεων, τοκομεριδίων γ)έκδοση, οπισθογράφηση επιταγών δ) έκδοση, αποδοχή, οπισθογράφηση, προεξόφληση συνάλλων, γραμματίων εις διαταγή ε) παραλαβή φορτωτικών εγγράφων στ) άνοιγμα ενεγγύων πιστώσεων ζ) είσπραξη φορτωτικών μετ' ενεγγύου προκαταβολής η) συμβάσεις δανείων και πιστώσεων θ) λήψη δανείων και χρήση πιστώσεων ι) παροχή εμπράγματου ασφαλείας επί κινητών, ανάληψη των εις ενεχύρου δοθέντων ια) παροχή εμπράγματης ασφάλειας επί ακινήτων ιβ) έκδοση εγγυητικών επιστολών υπέρ της εταιρείας, απαλλαγή εκ αυτών ιγ) εγγύηση υπέρ τρίτων ιδ) έκδοση εγγυητικών επιστολών υπέρ τρίτων ιε) μίσθωση και χρήση χρηματοκιβωτίων και λύση μισθώσεων κ) κάθε άλλη συναλλακτική πράξη που αφορά την εταιρεία λ) να διορίζει πληρεξούσιο προκειμένου να 1) προβαίνει σε ανάληψη χρημάτων από οποιοδήποτε τραπεζικό λογαριασμό της εταιρείας, 2) να προβαίνει σε πράξεις αντικατάστασης και εκπροσώπησης του προέδρου, του αντιπροέδρου, της διευθύνουσας συμβούλου και του μέλους, όταν χρειαστεί, 3) να προβαίνει σε αγορές ακινήτων.

Σχετικό έγγραφο Ελέγχου της ΠΕ Λάρισας (Αρ. Πρωτ.: 727949/ 19/12/2016).

Ύστερα από Έγκριση της Νομικής Σύμβουλου

Με εντολή Προέδρου Επιμελητηρίου

Η γνησιότητα του παρόντος μπορεί να επιβεβαιωθεί από το https://www.businessregistry.gr/publicity.aspx

GEORGIOS KARKANIAS
PRESIDENT

03/12/18

GEORGIOS KARKANIAS
PRESIDENT

03/12/18

OFFICIAL TRANSLATION FROM THE GREEK LANGUAGE

HELLENIC REPUBLIC
CHAMBER OF LARISSA
DEPARTMENT OF REGISTRY /GENERAL COMMERCIAL REGISTER SERVICE (ΓΕΜΗ Service)
Postal Address: 44, Papakyriazi Street
Postal Code: 41222
Info: BIZIOU Stella
Tel: (+30) 2410 254738
Fax: (+30) 2410 257522
Email: mitroo@larissa-chamber.gr

Larissa, 20/12/2016
File No: 727949

EKATERINI VASSILIOU
LAWYER
ELEFTHERIAS 47 - TIRNAVOS 40100
LARISSA - GREECE
TEL. +30 24920 24240
LARISSA BAR ASSOCIATION
email: katvas9987@yahoo.gr

COMMUNICATION

concerning the registration of new data of the Public Limited Company named **„KARKANIAS ENVIRONMENTAL TECHNOLOGY S.A."** in the General Commercial Register (ΓΕΜΗ).

Today, **the 20th of December 2016**, there have been registered in the General Commercial Register the following data of the Public Limited Company named **KARKANIAS ENVIRONMENTAL TECHNOLOGY S.A.** with ΓΕΜΗ Number: 26564640000 [former Register Number of Public Limited Companies (M.A.E.) 48779/31/B/01/12]:

a) The Decision of the General Assembly of the Company's Shareholders dated 14/12/2016 (KAK Code: **861643**), which elected the new Board of Directors of the Company.

b) The Minutes of the Company's Board of Directors dated 14/12/2016 (KAK Code: **861644**), which prove that the new Board of Directors elected by the above General Assembly has been formed as follows:

GEORGIOS KARKANIAS, son of APOSTOLOS, resident of Larissa at 3, Farmaki Street, GR-41222, holder of the Hellenic ID card No: AK 407117 and the Tax ID No: 117333686 (A' Public Finance Service of Larissa): **Chairman**

CHRISTOS KARKANIAS, son of APOSTOLOS, resident of Larissa at 3, Farmaki Street, GR-41222, holder of the Hellenic ID card No: AM 363854 and the Tax ID No: 140445508 (A' Public Finance Service of Larissa): **Vice-Chairman**

VASILIKI KARKANIA, daughter of APOSTOLOS, resident of Larissa at 3, Farmaki Street, GR-41222, holder of the Hellenic ID card No: AK 407175 and the Tax ID No: 128996162 (A' Public Finance Service of Larissa): **Managing Director**

STAMATIA KARKANIA, daughter of CHRISTOS, resident of Larissa at 3, Farmaki Street, GR-41222, holder of the Hellenic ID Card No: AK 407174 and the Tax ID No: 063983574 (A' Public Finance Service of Larissa): **Member**

The Term of Office of the above Board of Directors ends on 13/12/2021.

c) The Board has granted the right to represent and bind the Company to the following persons:

REPRESENTATION

The rights to represent and bind the Company have been granted to the following persons:

GEORGIOS KARKANIAS
PRESIDENT

l 23/12/16

OFFICIAL TRANSLATION FROM THE GREEK LANGUAGE

REPRESENTATION OF THE COMPANY

According to the relevant Article of Association, the Board of Directors entrusts Mr. Georgios Karkanias, Chairman, Mr. Christos Karkanias, Vice-Chairman, Ms Vasiliki Karkania, Managing Director, and Ms Stamatia Karkania, member of the Board, with the entirety of the rights described in the said Article.

In addition, the Board entrusts all of its Members with the right to represent the Company *separately or in common* before any Public Tender and before any Tender held by Bodies who are governed by the Public or Private Law, no matter the place and the object of the Tender.

SIGNATURE RIGHTS

Furthermore, according to the same Article, the Board grants unanimously to Mr. Georgios Karkanias, Chairman, Mr. Christos Karkanias, Vice-Chairman, Ms Vasiliki Karkania, Managing Director, and Ms Stamatia Karkania, member of the Board, the right to represent and bind the Company with their signature only, which shall be put separately under the Company's stamp for actions such as:

a) To collect money and pay cheques.
b) To withdraw money, dividend coupons and interest coupons.
c) To issue and endorse cheques.
d) To issue, accept, endorse and pay in advance bills of exchange and promissory notes.
e) To receive Bills of Lading.
f) To open guaranteed credits.
g) To collect bills of lading with guaranteed payments in advance.
h) To enter into contracts for loans and credits.
i) To receive the loans and use the credits.
j) To grant collateral security on movable assets and take it back.
k) To grant collateral security on immovable assets.
l) To issue letters of guarantee for the Company, or to exempt the Company from these letters.
m) To guarantee for a third party.
n) To issue letters of guarantee for a third party.
o) To rent and use safe deposit boxes and to end this rental.
p) To make any type of transaction concerning the Company
q) To appoint an attorney, who shall have the power to
    a. Withdraw money from all bank accounts of the Company
    b. To replace and represent the Chairman, the Vice-Chairman, the Managing Director and the member, if needed.
    c. To purchase any real property.

EKATERINI ... LA
ELEFTHERIAS 17 ...
LARISSA ...
TEL. ... 30 24 ...
LARISSA BAR
email: ...katvass...

Ref. : Document of the Regional Unit of Larissa (File No: 727949/19/12/2016)

Approved by the Chamber's Legal Consultant.

By Order of the President of the
Chamber of Larissa
(signature and stamp of the Hellenic Republic)

The authenticity of this certificate can be checked in the following link: https://businessregistry.gr/publicity.aspx

GEORGIOS KARKANIAS
PRESIDENT

03/12/19

OFFICIAL TRANSLATION FROM THE GREEK LANGUAGE

I, the undersigned certified translator, do hereby certify that the foregoing is a true translation of the attached Greek document, pursuant to Presidential Decree No.169/17.6.2002.

Larissa, 28/12/16

KONSTANTINA MICHAILAKI
Certified Translator
Ionian University Graduate
1, Marinou Antipa str., GR - 412 22
Larissa Tel. +30-2410 549998
Tax ID 066330544

Decision No 121/05
Corfu Court of First Instance

GEORGIOS KARKANTAS
PRESIDENT

03/12/16

EKATERINI VASSILIOU
LAWYER
ELEFTHERIAS 17 - TIRNAVOS 40100
LARISSA - GREECE
TEL. +30 24920 24240
LARISSA BAR ASSOCIATION
email: katvas9987@yahoo.gr

EKATERINI V
LAWY
ELEFTHERIAS 17
LARISSA -
TEL. +30 24
LARISSA BAR
email:katvass

GEORGIOS KARKANIAS
PRESIDENT

03/12/18

ΕΛΛΗΝΙΚΗ ΔΗΜΟΚΡΑΤΙΑ

ΕΠΙΜΕΛΗΤΗΡΙΟ ΛΑΡΙΣΑΣ
ΤΜΗΜΑ: ΜΗΤΡΩΟΥ / Υπηρεσία Γ.Ε.ΜΗ.
Δ.νση: Παπακυριαζή 44
Τ.Κ.: 41222
Πληροφορίες: BIZIOU STELLA
Τηλέφωνο: 2410254738
Fax: 2410 257522
E-mail: mitroo@larissa-chamber.gr

Λάρισα, 20/12/2016
Αριθ.Πρωτ.: 727949

ASSILIOU
E.R.
IRAVOS 40100
GREECE
920 24240
ASSOCIATION
987@yahoo.gr

ΑΝΑΚΟΙΝΩΣΗ

Καταχώρισης στο Γενικό Εμπορικό Μητρώο στοιχείων της ανώνυμης εταιρείας με την επωνυμία «ΚΑΡΚΑΝΙΑΣ-ΤΕΧΝΟΛΟΓΙΑ ΠΕΡΙΒΑΛΛΟΝΤΟΣ ΑΝΩΝΥΜΗ ΕΤΑΙΡΙΑ».

Την 20/12/2016 καταχωρίσθηκαν στο Γενικό Εμπορικό Μητρώο (Γ.Ε.ΜΗ.), τα κατωτέρω στοιχεία της Ανώνυμης Εταιρείας με την επωνυμία **«ΚΑΡΚΑΝΙΑΣ-ΤΕΧΝΟΛΟΓΙΑ ΠΕΡΙΒΑΛΛΟΝΤΟΣ ΑΝΩΝΥΜΗ ΕΤΑΙΡΙΑ»** και Αριθμό **Γ.Ε.ΜΗ 126564640000** (πρώην Αρ.ΜΑΕ 48779/31/Β/01/12):

α) Με Κωδικό Αριθμό Καταχώρισης **861643** η από 14/12/2016 απόφαση της Γενικής Συνέλευσης των μετόχων της σύμφωνα με την οποία εκλέχθηκε νέο Διοικητικό Συμβούλιο της εταιρείας.

β) Με Κωδικό Αριθμό Καταχώρισης **861644** το από 14/12/2016 πρακτικό του Διοικητικού Συμβουλίου της εταιρείας σύμφωνα με το οποίο το Διοικητικό Συμβούλιο, που εκλέχθηκε από την ανωτέρω Γενική Συνέλευση, συγκροτήθηκε σε σώμα ως εξής :

ΚΑΡΚΑΝΙΑΣ ΓΕΩΡΓΙΟΣ του ΑΠΟΣΤΟΛΟΥ που κατοικεί στο/η ΛΑΡΙΣΑ, Δ/νση ΦΑΡΜΑΚΗ 3, ΤΚ 41222 με ΑΔΤ: ΑΚ407117 και ΑΦΜ: 117333680 (ΔΟΥ: Α΄ΛΑΡΙΣΗΣ) ως **Πρόεδρος**

ΚΑΡΚΑΝΙΑΣ ΧΡΗΣΤΟΣ του ΑΠΟΣΤΟΛΟΥ που κατοικεί στο/η ΛΑΡΙΣΑ, Δ/νση ΦΑΡΜΑΚΗ 3, ΤΚ 41222 με ΑΔΤ: ΑΜ363854 και ΑΦΜ: 140445508 (ΔΟΥ: Α΄ΛΑΡΙΣΗΣ) ως **Αντιπρόεδρος**

ΚΑΡΚΑΝΙΑ ΒΑΣΙΛΙΚΗ του ΑΠΟΣΤΟΛΟΥ που κατοικεί στο/η ΛΑΡΙΣΑ, Δ/νση ΦΑΡΜΑΚΗ 3, ΤΚ 41222 με ΑΔΤ: ΑΚ407178 και ΑΦΜ: 128996162 (ΔΟΥ: Α΄ΛΑΡΙΣΗΣ) ως **Διευθύνων Σύμβουλος**

ΚΑΡΚΑΝΙΑ ΣΤΑΜΑΤΙΑ του ΧΡΗΣΤΟΥ που κατοικεί στο/η ΛΑΡΙΣΑ, Δ/νση ΦΑΡΜΑΚΗ 3, ΤΚ 41222 με ΑΔΤ: ΑΚ407174 και ΑΦΜ: 063983574 (ΔΟΥ: Α΄ΛΑΡΙΣΗΣ) ως **Μέλος Διοικ. Συμβουλίου**

Η θητεία του ανωτέρω Διοικητικού Συμβουλίου λήγει την 13/12/2021

γ) Το Διοικητικό Συμβούλιο χορήγησε δικαιώματα εκπροσώπησης και δέσμευσης της εταιρείας στους κάτωθι:

ΕΚΠΡΟΣΩΠΗΣΗ

Τα δικαιώματα εκπροσώπησης και δέσμευσης της εταιρείας χορηγήθηκαν αναλυτικά ως ακολούθως:

ΕΚΠΡΟΣΩΠΗΣΗ ΤΗΣ ΕΤΑΙΡΕΙΑΣ
Το Διοικητικό Συμβούλιο βάσει του άρθρου του καταστατικού αναθέτει στον Πρόεδρο του Δ.Σ. κ. Καρκανιά Γεώργιο, στον Αντιπρόεδρο Καρκανιά Χρήστο, στη Διευθύνων Σύμβουλο κα. Καρκανιά Βασιλική καθώς και στο μέλος του Διοικητικού Συμβουλίου κα. Καρκανιά Σταματία την ενάσκηση των δικαιωμάτων αυτών στο σύνολο.
Επίσης αναθέτει σε όλα τα μέλη του Διοικητικού Συμβουλίου *όπως ατομικά ή από κοινού να εκπροσωπούν την εταιρία σε* οποιονδήποτε διαγωνισμό Δημοσίου Νομικού προσώπου Δημοσίου ή Ιδιωτικού Δικαίου, οπουδήποτε και αν διενεργηθεί και για *οποιοδήποτε έργο.*

ΠΑΡΟΧΗ ΔΙΚΑΙΩΜΑΤΟΣ ΥΠΟΓΡΑΦΗΣ
Στη συνέχεια το Διοικητικό Συμβούλιο παρέχει παμψηφεί σύμφωνα με άρθρο του καταστατικού δικαίωμα στον κ. Καρκανιά Γεώργιο, Πρόεδρο του Δ.Σ.,στον Αντιπρόεδρο κ. Χρήστο Καρκανιά, στη Διευθύνων Σύμβουλο κα. Καρκανιά Βασιλική καθώς και στο μέλος του Διοικητικού Συμβουλίου κα. Καρκανιά Σταματία όπως εκπροσωπούν και δεσμεύουν την εταιρεία με μόνη την υπογραφή ο καθένας χωριστά κάτω από τη σφραγίδα της εταιρείας για πράξεις όπως :

GEORGIOS KARKANIAS
PRESIDENT

03/12/18

α) είσπραξη χρημάτων, εξόφληση επιταγών β) ανάληψη χρημάτων, χρηματογράφων, μερισματαποδείξεων, τοκομεριδίων γ)έκδοση, οπισθογράφηση επιταγών δ) έκδοση, αποδοχή, οπισθογράφηση, προεξόφληση συν/κων, γραμματίων εις διαταγή ε) παραλαβή φορτωτικών εγγράφων στ) άνοιγμα ενεγγύων πιστώσεων ζ) είσπραξη φορτωτικών μετ' ενεγγύου προκαταβολής η) συμβάσεις δανείων και πιστώσεων θ) λήψη δανείων και χρήση πιστώσεων ι) παροχή εμπράγματου ασφαλείας επί κινητών, ανάληψη των εις ενεχύρου δοθέντων ια) παροχή εμπράγματης ασφάλειας επί ακινήτων ιβ) έκδοση εγγυητικών επιστολών υπέρ της εταιρείας, απαλλαγή εκ αυτών ιγ) εγγύηση υπέρ τρίτων ιδ) έκδοση εγγυητικών επιστολών υπέρ τρίτων ιε) μίσθωση και χρήση χρηματοκιβωτίων και λύση μισθώσεων κ) κάθε άλλη συναλλακτική πράξη που αφορά την εταιρεία λ) να διορίζει πληρεξούσιο προκειμένου να 1) προβαίνει σε ανάληψη χρημάτων από οποιοδήποτε τραπεζικό λογαριασμό της εταιρείας, 2) να προβαίνει σε πράξεις αντικατάστασης και εκπροσώπησης του προέδρου, του αντιπροέδρου, της διευθύνουσας συμβούλου και του μέλους, όταν χρειαστεί, 3) να προβαίνει σε αγορές ακινήτων.

Σχετικό έγγραφο Ελέγχου της ΠΕ Λάρισας (Αρ. Πρωτ.: 727949/ 19/12/2016).

Ύστερα από Έγκριση της Νομικής Σύμβουλου

Με εντολή Προέδρου Επιμελητηρίου

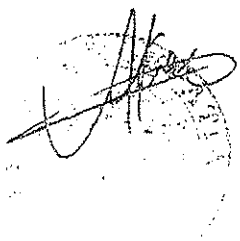

Η γνησιότητα του παρόντος μπορεί να επιβεβαιωθεί από το https://www.businessregistry.gr/publicity.aspx

Certification

I hereby certify that this is a true copy from the original, which I have seen.

Larissa, December the 28th 2016

The Lawyer that Certifies

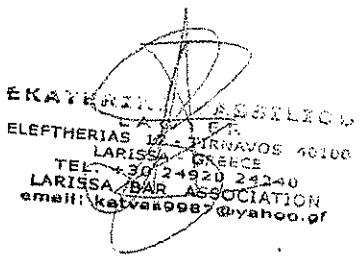

GEORGIOS KARKANIAS
PRESIDENT

28/12/18

Form ELI – 2: JVCA Information Sheet

Each member of a JVCA must fill in this form

a. JVCA / Specialist Subcontractor Information	
Tenderer's legal name	
JVCA Partner's or Subcontractor's legal name	
JVCA Partner's or Subcontractor's country of constitution	
JVCA Partner's or Subcontractor's year of constitution	
JVCA Partner's or Subcontractor's legal address in country of constitution	
JVCA Partner's or Subcontractor's authorized representative information (name, address, telephone numbers, fax numbers, e-mail address)	
Attached are copies of the following original documents. ❑ 1. Articles of incorporation or constitution of the legal entity named above, in accordance with ITT 4.1 and 4.2. ❑ 2. Authorization to represent the firm named above, in accordance with ITT 20.2. ❑ 3. In the case of government-owned entity, documents establishing legal and financial autonomy and compliance with commercial law, in accordance with ITT 4.5.	

N/A

GEORGIOS KARKANIAS
PRESIDENT

GEORGIOS KARKANIAS
PRESIDENT

03/12/18

Form CON – 2: Historical Contract Non-Performance

(The following table shall be filled in for the Tenderer and for each partner of a Joint Venture)
Tenderer's Legal Name: ***KARKANIAS ENVIRONMENTAL TECHNOLOGY S.A. "***
Date: ***14.09.2017***
Joint Venture Party Legal Name: ***N/A***
Tender Ref. and title: *EBRD ME DAN 9000 – Danilovgrad Municipal Infrastructure Construction of Wastewater Plant*
Page ***1*** of ***1*** pages

Non-Performing Contracts in accordance with Tender Data, Para 3.2(Qualifying requirement), Clause 3.2.2			
✓ Contract non-performance did not occur during the 5 years specified in Attachment I- Tenderers Qualification Criteria, Table 2.2., Sub-Factor 2.2.1.			
☐ Contract(s) not performed during the 5 years specified in Attachment I-Tenderers Qualification, Table 2.2., Sub-Factor 2.2.1.			
Year	**Non performed portion of contract**	**Contract Identification**	**Total Contract Amount (current value, EURO equivalent)**
		Contract Identification: Name of Employer: Address of Employer: Reason(s) for non performance:	
Pending Litigation, in accordance with Tender Data, Para 3.2 (Qualifying requirement), Clause 3.2.2.			
✓ No pending litigation in accordance with Attachment I-Tenderers Qualification Criteria, Table 2.2., Sub-Factor 2.2.2.			
☐ Pending litigation in accordance with Attachment I-Tenderers Qualification Criteria, Table 2.2., Sub-Factor 2.2.2.			
Year	**Outcome as Percentage of Total Assets**	**Contract Identification**	**Total Contract Amount (current value, EURO equivalent)**
		Contract Identification: Name of Employer:/ Address of Employer: Matter in dispute:	

GEORGIOS KARKANIAS
PRESIDENT

03/12/18

Form FIN – 1: Financial Situation

Each Tenderer or member of a JVCA must fill in this form

Information from Balance Sheet

Financial Data for Previous 3 Years [EURO Equivalent]		
2014	**2015**	**2016**

Total Assets	**3.348.762,10**	**4.463.765,56**	**4.028.795**
Total Liabilities	**1.239.922,39**	**1.851.339,39**	**1.564.453**
Net Worth	**2.108.839,71**	**2.612.426,17**	**2.464.342**
Current Assets	**2.325.255,64**	**3.531.228,45**	**3.196.564**
Current Liabilities	**1.106.675,85**	**1.675.484,10**	**1.564.453**

Information from Income Statement

Total Revenues	**4.008.744,84**	**6.364.777,58**	**3.562.601,32**
Profits Before Taxes	**178.326,28**	**951.449,93**	**600.662**
Profits After Taxes	**104.813,10**	**692.467,14**	**517.203**

✓ Attached are copies of financial statements (balance sheets including all related notes, and income statements) for the last three years, as indicated above, complying with the following conditions.

- All such documents reflect the financial situation of the Tenderer or partner to a JVCA, and not sister or parent companies.
- Historic financial statements must be audited by a certified accountant.
- Historic financial statements must be complete, including all notes to the financial statements.
- Historic financial statements must correspond to accounting periods already completed and audited (no statements for partial periods shall be requested or accepted).

GEORGIOS KARKANIAS
PRESIDENT

03/12/18

l 03/12/18

OFFICIAL TRANSLATION FROM THE GREEK LANGUAGE

KARKANIAS ENVIRONMENTAL TECHNOLOGY S.A.
Balance sheet of December 31st 2014 – 14th corporate year (January 1st – December 31st, 2014)
Public Companies Register No 48779/31/B/01/12, General Reg. No: 26564640000
(AMOUNTS in EURO)

ASSETS	Year Ended 2014			Year Ended 2013		
B. INSTALLATION EXPENSES	**Acquisition Cost**	**Depreciation**	**Undepreciated Value**	**Acquisition Cost**	**Depreciation**	**Undepreciated Value**
1. Incorporation & 1st Installation Expenses	42.551,24	42.551,24	0,00	41.151,24	41.151,24	0,00
4. Other Installation Expenses	270.769,88	241.769,78	29.000,10	280.497,58	228.497,78	52.000,10
	313.321,12	284.321,02	29.000,10	321.649,12	269.649,02	52.000,10
C. FIXED ASSETS						
I. Intangible Assets						
5. Other Intangible Assets	4.054,29	4.054,29	0,00	4.054,29	4.054,29	0,00
II. Tangible Assets						
1. Land	299.809,18	0,00	299.809,18	299.809,18	0,00	299.809,18
3. Buildings & Technical Works	1.264.652,40	1.262.009,23	2.643,17	1.262.832,40	1.261.779,03	1.053,37
4. Machinery, technical installations and other mechanical equipment	385.045,17	382.821,58	2.223,59	385.045,17	381.998,21	3.046,96
5. Transportation Equipment	226.875,18	156.898,04	69.977,14	170.463,96	146.787,71	23.676,25
6. Furniture and other equipment	283.857,24	259.020,36	24.836,88	248.436,48	241.927,11	6.509,37
	2.460.239,17	2.060.749,21	399.489,96	2.366.587,19	2.032.492,06	334.095,13
Total Assets (C I + C II)	2.464.293,46	2.064.803,50	399.489,96	2.370.641,48	2.036.546,35	334.095,13
III. Participations & other logn-term receivables						
2. Participations in other undertakings			561.414,27			499.255,98
7. Other log-term receivables			842,98			810,98
			562.257,25			500.066,96
Total Fixed Assets (C I + C II + C III)			961.747,21			834.162,09
D. CURRENT ASSETS						
I. Inventory						
2. Finished & Partly –finished products			14.625,44			53.738,81
4. Raw Materials – Expendables – Spare Parts			78.806,24			92.012,41
5. Advanced Payments for Inventory			70.942,79			14.677,04
			164.374,47			160.428,26
II. Receivables						
1. Clients			1.430.710,11			1.484.312,12
3a. Receivable cheques (postdated)			23.260,77			23.260,77

LIABILITIES	Year Ended 2014	Year Ended 2013
A. SHAREHOLDERS' EQUITY		
I. Share Capital		
1. Paid-up Capital (332.460 shares of 4,05 € each)	1.346.463,00	1.265.625,00
III. Revaluation Reserves - Investment Grants		
2. Reserves from value adjustments of other assets	13,21	80.851,21
3. Fixed Assets Investment Grants	2.342,21	7.780,00
	2.355,42	88.631,21
IV. Reserves		
1. Ordinary Reserve	163.100,79	162.168,37
3. Special Reserve	86.501,36	86.501,36
4. Extraordinary Reserve	298.222,27	298.222,27
5. Tax-free Reservesunder special laws	23.316,19	23.316,19
	571.140,61	570.208,19
V. Results Carried Forward		
Rest of profit carried forward	103.880,68	86.164,62
VI. Amounts intended for increase of share capital		
Shareholder's deposits	85.000,00	0,00
Total Shareholders' Equity (A I + A III + A IV + A V)	2.108.839,71	2.010.629,02
B. PROVISIONS FOR RISKS AND EXPENSES		
Other provisions	127.505,21	0,00
C. LIABILITIES		
II. Short-term Liabilities		
1. Suppliers	421.219,29	328.097,49

GEORGIOS KARKANIAS
PRESIDENT

03/12/15

OFFICIAL TRANSLATION FROM THE GREEK LANGUAGE

5a. Short-term receivables from participation in joint ventures	488.897,47		2a. Payable Cheques (postdated)	240.494,87	215.903,30
11. Sundry debtors	156.333,72	548.263,31	3. Banks- Short-term Liabilities Account	218.311,70	698.645,42
12. Advanced payments & credit management accounts	18,10	221.201,68	4. Advanced payments from clients	17.371,09	15.371,09
	2.099.220,17	18,10	5. Taxes-Duties	23.530,29	47.978,70
IV. Cash & cash equivalents		2.277.055,98	6. Social Security	13.182,80	11.735,38
1. Cash on hand	5.363,94	4.481,67	11. Sudnry creditors	172.565,81	170.190,38
3. Current & Time Deposits	56.297,06	234.651,77	Total Liabilities (C II)	1.106.675,85	1.487.921,76
	61.661,00	239.133,44			
Total Current Assets (D I + D II + D IV)	2.325.255,64	2.676.617,68			
E. Assets' Transit Accounts			**D. Liabilities Transit Accounts**		
1. Prepaid Expenses	20.163,02	7.473,91	1. Prepaid income	0,00	71.703,00
2. Income receivable	12.596,13	0,00	2. Payable Expenses	5.741,33	0,00
	32.759,15	7.473,91		5.741,33	71.703,00
GRAND TOTAL – ASSETS (B + C + D + E)	3.348.762,10	3.570.253,78	**GRAND TOTAL-LIABILITIES (A + B+ C+D)**	3.348.762,10	3.570.253,78
DEBIT MEMO. ACCOUNTS			**CREDIT MEMO. ACCOUNTS**		
2. Guarantees & real securities	1.764.065,68	1.499.490,84	Guarantees & Real Securities	1.764.065,68	1.499.490,84

NOTE: 1. The last adjustment of the corporate real property took place in the corporate year 2012, pursuant to L.2065/1992.

INCOME STATEMENT (L/86)
December 31st, 2014 (January 1st - December 31st, 2014)

	Year Ended 2014		Year Ended 2013	
I. OPERATING RESULTS				
Turnover (Sales)	3.339.263,47	3.339.263,47	2.906.692,03	2.906.692,03
Turnover (Joint ventures)	669.481,37		1.933.509,63	
	4.008.744,84		4.840.201,66	
Less: Cost of Sales		2.775.920,81		2.698.753,38
Gross Operating Results (profit)		563.342,66		207.938,65
Plus: 1. Other operating income		72.251,98		77.947,57
Total		635.594,64		285.886,22
Less: 1. Administrative Expenses		193.265,92		140.127,89
Sub-total Operating Results (profit)		442.328,72		145.758,33
PLUS:				
1.Participations income	7.705,37		52.687,38	
4. Credit Interest & similar income	26.342,21		21,41	
	34.047,58		52.708,79	
Less				

APPROPRIATION ACCOUNT (L/88)

	Year Ended 2014	Year Ended 2013
Net Results (profit) for the year	92.161,66	117.522,79
(+) Profit brought forward	86.164,62	10.486,15
(+) Non taxable Rreserves subjected to L.4172/13, Art. 72 for separate taxation	0,00	53.172,33
Total	178.326,28	181.181,27
LESS: 1. Income Tax	73.513,18	30.241,96
1a. Tax of the tax-free reserves (Art. 72 of L.4172/13)	0,00	7.975,85
2.Other taxes not charged to the operating cost	0,00	7.619,28
Appropriated profit:	104.813,10	135.344,18
Appropriated as:		
1. Ordinary Reserve	932,42	3.983,08
3a.Payable Dividends (Art. 72 of L.4172/13)	0,00	45.196,48
8.Profit carried forward	103.880,68	86.164,62
	104.813,10	135.344,18

LARISSA, APRIL 30th, 2015

GEORGIOS KARKANIAS
PRESIDENT

3. Debit interest & similar charges		108.702,55	-74.654,97		80.668,47	-27.959,68	
Total Operating Result (profits)s			367.673,75			117.798,65	
II. PLUS: Extraordinary Results							
1. Extraordinary and non – operating income		6.705,70			0,01		
		6.705,70			0,01		
Less							
1. Extraordinary & non-operating expenses	871,13			275,87			
2. Extraordinary losses	152.822,78			0,00			
3. Expenses brought forward	1.018,67			0,00			
4. Provisions for extraordinary risks	127.505,21	282.217,79	-275.512,09	0,00	275,87	-275,86	
Operating & Extraordinary Results (profit)			92.161,66			117.522,79	
Less: Total Depreciation of fixed assets		42.929,15			30.146,73		
		42.929,15	0,00		30.146,73	0,00	
Less: Charged to the operating cost			92.161,66			117.522,79	
NET RESULTS (profit) before Taxes							

The Chairman of the Board of Directors & C.E.O.
Apostolos Karkanias
ID Card: AK 407118
(signature)

The Vice-Chairman of the Board of Directors
Stamatia Karkania
ID Card: AK407174
(signature)

The Accountant,
Ioannis Papavaitsis
H.E.C. Licence No: 8470/ Class A'
(signature)

REPORT OF THE INDEPENDENT CERTIFIED PUBLIC ACCOUNTANT – AUDITOR
To the Shareholders of "KARKANIAS ENVIRONMENTAL TECHNOLOGY S.A."

FINANCIAL STATEMENTS REPORT

We have audited the above Financial Statements of **"KARKANIAS ENVIRONMENTAL TECHNOLOGY S.A."**, consisting of the balance sheet of December 31st, 2014, the income statement and the appropriation account for the year ended on the same date, as well as the related appendix.

RESPONSIBILITY OF THE ADMINISTRATION CONCERNING THE FINANCIAL STATEMENTS

The Company's Administration is responsible for drafting and presenting reasonably the financial statements according to the Accounting Standards set in the Greek General Chart of Accounts and the provisions of Articles 42a to 43c of Codified Law 2190/1920. The Administration is also responsible for taking all necessary internal measures in order to draft the financial statements accurately, with no essential inaccuracies resulting from fraud or error.

AUDITOR'S REPONSIBILITY

Our responsibility is to audit these financial statements and state our opinion. We conducted our audit in accordance with the International Standards on Auditing, which force us to comply with the professional ethics, and to draft and conduct the audit in order to obtain reasonable assurance that these financial statements do not include any essential inaccuracy. The audit consists of all necessary procedures that provide us with the audit documentation for the amounts and the information included in the financial statements. The necessary audit procedures are chosen by the auditor, including the risk assessments of any essential inaccuracy found in the financial statements that results from fraud or error. During these risk assessments, the auditor checks on the internal measures concerning the drafting and reasonable presentation of the company's financial statements in order to design the audit procedures that are suitable for the specific company. S/he does not intend to state an opinion concerning the efficiency of the Company's internal measures. The audit also includes the suitability of the accounting methods and principles used, as well as the rationality of the Administration's estimations along with the evaluation of the overall presentation of financial statements. We believe that the audit documentation collected so far is sufficient and proper for stating our opinion.

BASE FOR OPINION WITH RESERVATIONS

AUDIT'S RESULTS

1. In the Assets accounts entitled: D-II-1 "Clients", D-II-3a "Receivable Cheques" and D-II-5a "Short-term receivables from participation in joint ventures", there have been included overdue receivables and receivables in dispute of about 310.000,00 € in total; we believe that the Company should have included a provision of equal amount to cover the losses resulting from the non liquidation of these receivables. The absence of this required provision is a deviation from the Accounting Principles, pursuant to Codified L. 2190/1920 and the Greek

GEORGIOS KARKANIAS
PRESIDENT

General Chart of Accounts; as a result, the value of the aforementioned accounts and the shareholder's equity is increased by 310.000 €, and the income statements of corporate years 2014 and 2013 are increased by 32.000€ and 278.000 € respectively.

2. The account entitled "Participations in other undertakings" of 561.414,27 € illustrates the acquisition cost of the Company's participation in Joint Ventures, whose financial statements are not audited by Certified Accountants – Auditors. It was not possible for us to obtain reasonable assurance during our audit and, consequently, we keep our reservations as to the correct valuation of these participations and their possible consequences in the Shareholders' Equity and the income statements of corporate years 2014 and 2013.
3. By way of derogation of the Accounting Principles provided by the Greek Law (L. 2190/1920) and the Greek General Chart of Accounts, there is no provision for severance pay. On December 31st, 2014, the total sum of this non-included provision amounts to 18.000,00 € approximately. Consequently, the balance sheet lacks of provisions of 18.000,00 €, the shareholders' equity is increased by 18.000,00 € and the income statement of year 2014 and of year 2013 are also increased by 6.000,00 € and 12.000,00 €, respectively.
4. The participations income of 7.705,37 € results from the Company's Joint Ventures, whose financial statements are not audited by Certified Accountants – Auditors. It was not possible for us to obtain reasonable assurance during our audit as to this amount.
5. The tax liabilities of the Company have not been inspected by the competent Tax Authorities for the years 2009 to 2014. Consequently, the tax results of these corporate years are not defined yet. The Company has not estimated the additional taxes and increments that will probably be imposed in a future Tax Inspection, and it has not included a provision for this potential liability as well. It was not possible for us to obtain reasonable assurance during our audit as to the amount of this potential provision.

OPINION WITH RESERVATIONS

In our opinion, except from the consequences of the issues No 1,3 and the possible consequences of the issues No 2,4,5 raised in the previous paragraph ("Base for Opinion with Reservations"), the aforementioned financial statements present reasonably and essentially the financial position of "**KARKANIAS ENVIRONMENTAL TECHNOLOGY S.A"** as at December 31st 2014 as well as the financial performance for the year that ended that date, according to the Accounting Standards set in the Greek General Chart of Accounts and the provisions of Art. 42a to 43c of L. 2190/1920.

REPORT ON OTHER LEGAL AND REGULATORY ISSUES

a) We have verified the compliance and the consistency of the content of the Board of Directors' Report with the aforementioned financial statements, pursuant to Articles 43a and 37 of Codified L. 2190/1920.
b) The non-distribution of the shareholders'dividends is subjected to the Ordinary General Assembly of the Shareholders; the Decision shall be taken with the quorum and majority of voting needed, pursuant to the Greek Law.

Athens, June 2nd, 2015.
The Certified Public Accountant - Auditor
(signature)
SOFIA D. STATHOPOULOU
S.O.E.L (*Associated Certified Public Accountants-Auditors*) Register No 14751
S.O.L. (*Associated Certified Public Accountants)* Public Limited Company
Member of „Crowe Horwath International"
3, Fok. Negri str. GR - 11257 ATHENS
SOEL Register No 125

GEORGIOS KARKANIAS
PRESIDENT

03/12/18

OFFICIAL TRANSLATION FROM THE GREEK LANGUAGE

I, the undersigned certified translator, do hereby certify that the foregoing is a true translation of the attached Greek document, pursuant to Presidential Decree No.169/17.6.2002.
Larissa, 03/09/15

PANHELLENIC ASSOCIATION OF PROFESSIONAL TRANSLATORS GRADUATES OF THE IONIAN UNIVERSITY
Reg. No 111
KONSTANTINA MICHAILAKI
Certified Translator
I, Marinou Antipa str., Larissa
Tel. +30 2410 549998

KONSTANTINA MICHAILAKI
Certified Translator
Ionian University Graduate
I, Marinou Antipa str., Gr - 412 22
Larissa, Tel. +30 2410 549998
Tax ID 066330544

Decision No 121/05
Corfu Court of First Instance

GEORGIOS KARKANIAS
PRESIDENT

03/12/18

ΚΑΡΚΑΝΙΑΣ ΤΕΧΝΟΛΟΓΙΑ ΠΕΡΙΒΑΛΛΟΝΤΟΣ ΑΝΩΝΥΜΗ ΕΤΑΙΡΕΙΑ

ΠΕΡΙΟΔΟΣ ΑΠΟ 1ης ΙΑΝΟΥΑΡΙΟΥ 2014 - 1ης ΕΤΑΙΡΙΚΗ ΧΡΗΣΗ (1η ΙΑΝΟΥΑΡΙΟΥ -31 ΔΕΚΕΜΒΡΙΟΥ 2014)

ΑΡ.ΓΕ.ΜΗ 127763101000/12, ΑΡ. Γ.Ε.ΜΗ 2ης 135564640000

(ΠΟΣΑ ΣΕ €/YPD)

ΕΝΕΡΓΗΤΙΚΟ	Ποσά κλειόμενης χρήσεως 2014	Ποσά προηγούμενης χρήσεως 2013
Α. ΠΑΓΙΑ ΕΝΕΡΓΗΤΙΚΑ		
Β. ΕΞΟΔΑ ΕΠΟΜΕΝΩΝ ΧΡΗΣΕΩΝ		
1. Έξοδα πρώτης εγκατάστασης		
2. Λοιπά έξοδα επόμενων χρήσεων		
Γ. ΠΑΓΙΟ ΕΝΕΡΓΗΤΙΚΟ		
I. Ασώματες ακινητοποιήσεις		
3. Δικαιώματα βιομηχανικής ιδιοκτησίας	93,21	93.851,21
4. Λοιπές ασώματες ακινητοποιήσεις	2.343,21	7.249,99
	2.343,42	89.601,21
II. Ενσώματες ακινητοποιήσεις		
1. Γήπεδα-οικόπεδα	299.809,18	299.809,18
2. Κτίρια και τεχνικά έργα	1.743.824,43	1.743.779,00
3. Μηχανήματα-τεχνικές εγκαταστάσεις και λοιπός μηχανολογικός εξοπλισμός	383.565,17	381.998,21
4. Μεταφορικά μέσα	172.403,00	166.737,71
5. Έπιπλα και λοιπός εξοπλισμός	64.178,84	749.596,43
	2.363.971,24	3.342.729,57
Σύνολο ενσώματων πάγιων	2.366.314,47	3.432.330,78
III. Χρεόγραφα & μακροπρόθεσμες απαιτήσεις		
2. Συμμετοχές σε λοιπές επιχειρήσεις	587.451,27	
3. Λοιπές μακροπρόθεσμες απαιτήσεις	365,00	
	587.816,27	
Σύνολο πάγιου ενεργητικού (Β+Γ+Δ)	2.954.274,16	3.521.931,99
Δ. ΚΥΚΛΟΦΟΡΟΥΝ ΕΝΕΡΓΗΤΙΚΟ		
I. Αποθέματα		
2. Προϊόντα έτοιμα & ημιτελή	44.425,64	
4. Πρώτες & βοηθητικές καταναλωτικές αποθήκες	78.806,24	
5. Προκαταβολές για αγορές αποθεμάτων	70.942,79	
	194.231,67	
II. Απαιτήσεις		
1. Πελάτες	1.430.722,15	
3α. Επιταγές εισπρακτέες και χρεώστες συναλλαγών	23.095,77	
3ο. Βεβαιωμένοι - ληξιπρόθεσμες απαιτήσεις από συμβάσεις σε εκτέλεση	483.207,45	
11. Λοιποί Χρεώστες	194.233,72	
12. Λογαριασμός χρηματικών προκαταβολών & πιστώσεων	51,13	
	2.131.310,11	
IV. Διαθέσιμα		
1. Ταμείο	9.261,94	
2. Καταθέσεις όψεως & προθεσμίας	88.720,00	
	97.981,94	
Σύνολο κυκλοφορούντος ενεργητικού (Δ=I+II+III)	2.323.523,84	
Ε. ΜΕΤΑΒΑΤΙΚΟΙ ΛΟΓΑΡΙΑΣΜΟΙ ΕΝΕΡΓΗΤΙΚΟΥ		
1. Έξοδα επομένων χρήσεων	20.164,53	
2. Έσοδα χρήσης εισπρακτέα	12.595,11	
	32.759,64	
ΓΕΝΙΚΟ ΣΥΝΟΛΟ ΕΝΕΡΓΗΤΙΚΟΥ (Σ=Γ+Δ+Ε)	5.310.757,64	

ΠΑΘΗΤΙΚΟ	Ποσά κλειόμενης χρήσεως 2014	Ποσά προηγούμενης χρήσεως 2013
Α. ΚΑΘΑΡΗ ΘΕΣΗ		
I. Κεφάλαιο		
1. Καταβλημένο κεφάλαιο	1.246.463,00	1.246.463,00
II. Διαφορά υπέρ το άρτιο από έκδοση μετοχών		
2. Διαφορές από έκδοση μετοχών υπέρ το άρτιο	93,21	93.851,21
3. Διαφορές από έκδοση μετοχών υπέρ το άρτιο	2.343,21	7.249,99
	2.343,42	89.601,21
IV. Αποθεματικά κεφάλαια		
1. Τακτικό αποθεματικό	163.100,74	122.766,37
2. Έκτακτα αποθεματικά	80.501,32	58.501,35
3. Ειδικά αποθεματικά	286.227,27	286.227,27
4. Σύνολο αποθεματικών	529.829,33	467.494,99
5. Αφορολόγητα αποθεματικά ειδικών διατάξεων νόμων	27.316,19	27.316,19
	821.749,21	870.258,19
V. Αποτελέσματα εις νέο		
Υπόλοιπο κερδών (ζημιών) εις νέο	101.683,66	80.183,67
VI. Ποσά προσαυξήσεων και μειώσεων λογαριασμών		
1. Κρατικές επιχορηγίες	83.960,00	0,00
Σύνολο καθαρής θέσεως (Α=I+II+III+IV+V+VI)	2.156.636,27	2.318.823,05
Β. ΠΡΟΒΛΕΨΕΙΣ ΓΙΑ ΚΙΝΔΥΝΟΥΣ ΚΑΙ ΕΞΟΔΑ		
3. Λοιπές προβλέψεις	127.905,31	0,00
Γ. ΥΠΟΧΡΕΩΣΕΙΣ		
Δ. Μακροπρόθεσμες υποχρεώσεις		
1. Τραπεζικά δάνεια	421.219,20	329.657,40
2. Έντοκες χρηματικές ενισχύσεις	240.454,97	215.905,50
3. Τραπεζικά δάνεια βραχυπρόθεσμων υποχρεώσεων	218.311,70	696.948,42
4. Πιστωτικές τράπεζες	17.311,60	15.271,05
5. Υποχρεώσεις από φόρους-τέλη	52.530,20	47.918,70
8. Λοιπές μακροπρόθεσμες υποχρεώσεις	12.182,86	11.736,39
11. Παθητικοί λογαρ.	172.553,61	170.190,24
Σύνολο υποχρεώσεων (Γ)	1.136.673,80	1.487.221,71
Ε. ΜΕΤΑΒΑΤΙΚΟΙ ΛΟΓΑΡΙΑΣΜΟΙ ΠΑΘΗΤΙΚΟΥ		
1. Έσοδα επομένων χρήσεων	0,00	31.700,00
3. Έξοδα χρήσης δεδουλευμένα	4.741,20	0,00
	4.741,20	31.700,00
ΓΕΝΙΚΟ ΣΥΝΟΛΟ ΠΑΘΗΤΙΚΟΥ (Π=Α+Γ+Δ+Ε)	3.318.052,27	3.818.244,76
ΛΟΓΑΡΙΑΣΜΟΙ ΤΑΞΕΩΣ ΧΡΕΩΣΤΙΚΟΥ		
ΛΟΓΑΡΙΑΣΜΟΙ ΤΑΞΕΩΣ ΠΑΘΗΤΙΚΟΥ		
1. Χρηματικά μέσα εγκεκριμένα και μη χρηματικά αποθέματα	1.992.705,37	1.992.705,37

ΣΗΜΕΙΩΣΗ: 1) Η κατάσταση αποτελεσμάτων των εκκλειόντων την λήξασα ετών από έτους 2012, συμφωνεί με τις διατάξεις του Ν. 2065/1992

ΚΑΤΑΣΤΑΣΗ ΛΟΓΑΡΙΑΣΜΟΥ ΑΠΟΤΕΛΕΣΜΑΤΩΝ ΧΡΗΣΕΩΣ(ΛΑΣ)

Ετους ΔΕΚΕΜΒΡΙΟΥ 2014 (1 ΙΑΝΟΥΑΡΙΟΥ -31 ΔΕΚΕΜΒΡΙΟΥ 2014)

	Ποσά κλειόμενης χρήσεως 2014			Ποσά προηγούμενης χρήσεως 2013		
1. Κύκλος εργασιών (καθαρός)						
Κύκλος εργασιών (πωλήσεις)	3.331.263,47		3.331.263,47	2.906.622,03		2.906.622,03
Κόστος πωληθέντων (στο Κανονισμό)	-567.411,27		-567.411,27	-1.231.554,01		-1.231.554,01
	4.908.744,84		4.908.744,84	4.645.201,87		4.645.201,87
Μείον: Κόστος διαθέσεως			-2.775.329,91			-2.656.753,50
Κόστος αγορών εμπορευμάτων			-603.343,68			-267.859,65
Πλέον ή μείον: Διαφορά αποθεμάτων			-21.251,91			-23.467,49
Σύνολο			-624.595,59			-291.327,14
Μείον: 1. Έξοδα διοικητικής λειτουργίας			-191.263,57			-145.127,85
Μείον: αποσβέσεις πάγιου ενεργητικού			-442.329,22			-145.758,25
Πλέον:						
1. Έσοδα συμμετοχών		7.501,32			33.642,32	
4. Πιστωτικοί τόκοι & συναφή έσοδα		29.747,71			21,35	
		34.647,64			33.306,74	
Μείον:						
1. Χρεωστικοί τόκοι & συναφή έξοδα		-101.737,61			-79.644,97	
			-347.673,71			-91.466,47
Σύνολο επαναλαμβανόμενων αποτελεσμάτων						-137.766,05
4. ΠΛΕΟΝ Ή ΜΕΙΟΝ ΑΝΑΛΟΓΟΥΝ:						
1. Κέρδη & ζημιές εκτός		8.235,50			0,01	
		8.235,50			0,01	
Μείον:						
1. Έκτακτη ή απρόοπτη ζημιά	871,13			370,67		
2. Έκτακτη ζημιά	192.623,74			0,00		
3. Έξοδα προηγούμενων χρήσεων	1.619,87			0,00		
4. Παθητικοί τόκοι για εκπνεύσαν πληρωμή	107.566,31	-302.317,05	-315.612,05	0,00	-370,67	-370,66
Προκαταβολή & εκτιμώμενη φορολογία εισοδήματος			-302.183,66			-137.522,70
Μείον: Έκτακτη αποσβεστέα πάγιου ενεργητικού		-42.929,15			-30.149,33	
Μείον: Έκτακτη αναβολή φόρου εισοδήματος		-42.929,15	0,00		-30.149,33	0,00
ΚΑΘΑΡΑ ΑΠΟΤΕΛΕΣΜΑΤΑ(Κερδη/Ζημιές)ΠΡΟ ΦΟΡΩΝ			-92.183,66			-317.522,70

Αθήνα, 2 Ιουνίου 2015

Η ΠΡΟΕΔΡΟΣ ΚΑΙ ΔΙΕΥΘΥΝΟΥΣΑ ΣΥΜΒΟΥΛΟΣ

ΑΝΔΡΙΑΝΑ Ε. ΚΑΡΑΓΙΑΝΝΟΥ

ΑΜ ΣΟΕΛ 24751

ΣΟΛ ΟΡΚΩΤΟΙ ΛΟΓΙΣΤΕΣ

Crowe Horwath

Εκπροσώπηση Ορκωτών Λογιστών Α.Ε.Ε.

Μέλος της Crowe Horwath International

Ιωαν. Λέκκα 6, 11527 Αθήνα

Α/Μ ΣΟΕΛ 125

GEORGIOS KARKANIAS
PRESIDENT

03/12/18

03/12/18

OFFICIAL TRANSLATION FROM THE GREEK LANGUAGE

[KARKANIAS ENVIRONMENTAL TECHNOLOGY S.A.]

REPORT OF THE BOARD OF DIRECTORS

AND THE CERTIFIED PUBLIC ACCOUNTANT /AUDITOR

&

FINANCIAL STATEMENTS

for the period: January 1st to December 31st 2015

on the Company's

BALANCE SHEET

INCOME STATEMENT

APPENDIX (NOTES)

BY VIRTUE OF THE PROVISIONS OF L.4308/2014

(GREEK ACCOUNTING STANDARDS)

GEMI No (General Commercial Register No): 026564640000

Reg. No for Public Limited Companies: 48779/031/B/2001/0012

Industrial Zone of Larissa, Postal Code: 41004, Greece

Tel : (+30) 2410 541 386, Fax : (+30) 2410 541 354

GEORGIOS KARKANIAS
PRESIDENT

03/12/18

TABLE OF CONTENTS

DESCRIPTION	*Page*
Report of the Board of Directors of the Public Limited Company	3
Report of the Certified Public Accountant – Auditor	7
Annual Financial Statements	9
Appendix on the financial statements of 2015	12

GEORGIOS KARKANIAS
PRESIDENT

03/12/18

REPORT OF THE BOARD OF DIRECTORS OF THE PUBLIC LIMITED COMPANY

"KARKANIAS ENVIRONMENTAL TECHNOLOGY S.A."

GEMI No (General Commercial Register No): 026564640000

Reg. No for Public Limited Companies: 48779/031/B/2001/0012

TO THE ANNUAL ORDINARY GENERAL ASSEMBLY

OF THE COMPANY'S SHAREHOLDERS

FOR THE YEAR 2015

Dear shareholders,

Pursuant to the Greek Law and the Company's Articles of Association, we hereby present to you the activity of the Company for the year ended on 31.12.2015, as well as the Company's perspectives for the current year.

A. PROGRESS OF THE COMPANY'S WORKS

During the year ended on 31/12/2015 and despite the extremely difficult conditions of the Greek economy, our Company has increased its turnover.

The company's turnover for the year ended increased to 4.405.564,01€ compared to 3.339.263,47€ of the previous year. The Gross Profits amounted to 626.882,24€ compared to 563.342,66€ of the previous management period and the gross profit margin was reduced to 14,23% on the sales, compared to 16.87% of the previous year. The reason for this reduction was the need to lower the prices because of the market's competition.

The net profits of the year amounted to 588.586,46€.

The Board of Directors suggests that the above profits should be carried forward to the next year, after extracting the Ordinary Reserve as required by Law, in order to protect the cash flow of the Company.

The suggested Appropriation of profits is as follows:

1. Ordinary Reserve	€29.521,82
2. Profit carried forward	€559.064,64

B. ECONOMIC STATUS OF THE COMPANY

The balance sheet of the Company, which is attached herein, presents the real economic status of our Company on 31.12.2015.

GEORGIOS KARKANIAS
PRESIDENT

03/12/18

The economic status of the Company is positive compared to the previous year due to the efforts of the Administration to preserve the profitability of the Company despite the existing competition.

a. Statistical picture of the company

i. **Ratios of Economic structure**

	2015	2014
1.1 Current Assets/ Total assets	78,79%	69,24%
1.2 Shareholders' equity / Total liabilities	165,95%	188,96%
1.3 Shareholders' equity / Fixed assets	294,21%	212,62%
1.4 Current assets / Short-term liabilities	209,85%	200,51%
1.5 Working capital / Current assets	52,35%	50,13%
1.6 Fixed assets / Total asset	21,21%	30,76%

ii. **Ratios of Efficiency and Return**

	2015	2014
2.1 Operating results / Sales turnover	13,36%	0,56%
2.2 Net income statement (before taxes) / Shareholders' equity	32,47%	4,38%
2.3 Gross income / Sales turnover	14,23%	16,87%
2.4 Sales turnover / Shareholders' equity	168,79%	158,52%
2.5 EBITDA / interest paid	1379,73%	224,28%

C. PROVISIONS FOR THE COMPANY'S FUTURE

In the current year, the Company presents significant increase of its turnover due to the efforts of the Administration to maintain the Company's status. The Administration of the Company will make any effort to achieve the goals set so that its turnover reaches the levels of the previous year and even exceeds them.

D. FIXED ASSETS

The appendix with the financial statements of the year ended on 31.12.2015 presents with details the movement of the Company's fixed assets (purchases – sales – reductions and depreciations for the year ended on 31.12.2015 and it is attached herein.

The depreciations of all fixed assets have been calculated by virtue of L.4308/2014 and par.24 of L.4172/2013.

E. REAL ESTATE OF THE COMPANY

The Company's real estate from the previous years is the following:

a. A 400,00m^2 building in the Industrial Zone of Larissa
b. A 2.221,00m^2 building in the Industrial Zone of Larissa
c. Land of 2.335,00m^2 total surface in the land region of the Community of Makrychori which is inside the boundaries of the Industrial Zone of Larissa
d. Land of 4.541,00m^2 total surface in the land region of the Community of Makrychori which is inside the boundaries of the Industrial Zone of Larissa

GEORGIOS KARKANIAS
PRESIDENT

03/12/18

e. Land of 6.994,00m^2 total surface in the land region of the Community of Makrychori which is inside the boundaries of the Industrial Zone of Larissa
f. Land of 3.994,00m^2 total surface in the land region of the Kilkis Municipality

F. SECURITIES

The Company does not possess any Securities.

G. EXCHANGE AND BRANCHES

The Company does not possess any exchange or branches.

H. BASIC ACCOUNTING PRINCIPLES

The balance sheet of the current year as well as the attached income statement abides with the Accounting Principles set in the Greek Accounting Standards:

1. The fixed assets were valued according to their purchase price, which has been increased due to additions and betterments and decreased because of the depreciations required by Law, which were calculated according to the provisions of L.4308/2014 and par. 24 of L.4172/2013.
2. There was no need to make provisions for the devaluation of the Company's assets.
3. The inventory of the products, finished or partly-finished, has been valued at the lowest value per kind, which was measured between their acquisition cost (historic value) and their net liquid value. The rest of the inventory has been valued at the lowest price per kind, between their purchase price (historic cost) and the current purchase price the closing date of the balance sheet.
   The average purchase price of the entire inventory is always defined by using the method of the weighted average-cost.
4. The Company has made a provision of €18.706,83 for losses from doubtful debts.

The appendix of the Company which is attached in the financial statements and the present report gives all necessary information and clarifications required by the Greek Accounting Standards.

I. SIGNIFICANT LOSSES

There are no significant losses of the Company.

J. FINANCIAL RISK MANAGEMENT

a) Credit risk

The Company does not face significant credit risk. The wholesale sales which cover 100% of the Company's total sales are addressed mostly to customers with low risk of losses and more precisely to the Greek public sector.

b) Cash flow risk

The cash flow risk is low due to the credit policy of the Company.

c) Cash flow risks and risk of fair value changes because of interest rate changes.

GEORGIOS KARKANIAS
PRESIDENT

03/12/18

The Company's lending is under control.

d) Inventory risk

The Company takes all the necessary and suitable measures to minimize the risk of losing its inventory from natural disasters, thefts etc.

K. INFORMATION ABOUT IMPORTANT FACTS FROM THE END OF THE YEAR UNTIL TODAY.

Except from those mentioned in the report, there are no subsequent facts affecting the future of the Company.

To conclude, we invite you, the Company's shareholders, to:

1. Approve the balance sheet and the income statement of the year ended on 31.12.2015.

2. To release us and the certified auditors from every responsibility concerning the activities of the year ended on 31.12.2015, as required by the Law and the Company's Articles of Association.

Larissa, April 30th, 2016.

The Company's Board of Directors

Chairman and Managing Director	Vice-Chairman of the Board
(Signature)	*(signature)*
Apostolos G. Karkanias	Stamatia Karkania
Hellenic ID Card No. AK 407118	Hellenic ID Card No. AK 407174

GEORGIOS KARKANIAS
PRESIDENT

03/12/18

Report of the Independent Certified Public Accountant – Auditor

To the Shareholders of "Karkanias Environmental Technology S.A."

FINANCIAL STATEMENTS AUDIT REPORT

We have audited the above Financial Statements of "**KARKANIAS ENVIRONMENTAL TECHNOLOGY S.A.**", consisting of the balance sheet of December 31st, 2015, the income statement and the appropriation account for the year ended on the same date, as well as the related appendix.

Responsibility of the administration concerning the financial statements. The Company's Administration is responsible for drafting and presenting reasonably the financial statements according to the Hellenic Accounting Standards. The Administration is also responsible for taking all necessary internal measures in order to draft the financial statements accurately, with no essential inaccuracies resulting from fraud or error.

AUDITOR'S REPONSIBILITY

Our responsibility is to audit these financial statements and state our opinion. We conducted our audit in accordance with the International Standards on Auditing, which force us to comply with the professional ethics, and to draft and conduct the audit in order to obtain reasonable assurance that these financial statements do not include any essential inaccuracy. The audit consists of all necessary procedures that provide us with the audit documentation for the amounts and the information included in the financial statements. The necessary audit procedures are chosen by the auditor, including the risk assessments of any essential inaccuracy found in the financial statements that results from fraud or error. During these risk assessments, the auditor checks on the internal measures concerning the drafting and reasonable presentation of the company's financial statements in order to design the audit procedures that are suitable for the specific company. S/he does not intend to state an opinion concerning the efficiency of the Company's internal measures. The audit also includes the suitability of the accounting methods and principles used, as well as the rationality of the Administration's estimations along with the evaluation of the overall presentation of financial statements.

We believe that the audit documentation collected so far is sufficient and proper for stating our opinion.

Base for opinion with reservations

Audit's results

1. In the accounts of the commercial receivables from clients and the advance payments there have been included overdue receivables from the previous year of about 585.000,00 €; the write-down was estimated at 146.000,00€ approximately , but there is still a remainder of almost 439.000,00€. The lack of this necessary write-down is a deviation from the Accounting Principles set in the Greek General Chart of Accounts; as a result, the value of the aforementioned accounts and the shareholder's equity is increased by 439.000,00 € approximately, and the income statements of corporate years 2015 and 2014 are increased by 2.000,00€ and 32.000,00 € respectively.
2. The account entitled "Participations in other undertakings" illustrates the acquisition cost of the Company's participation in Joint Ventures, whose financial statements are not audited by Certified Accountants – Auditors. It was not possible for us to obtain information concerning the fair value of

GEORGIOS KARKANIAS
PRESIDENT

03/12/18

these participations during our audit and, consequently, we keep our reservations as to the correct valuation of these participations and their possible consequences in the Shareholders' Equity and the income statements of corporate years 2015 and 2014.

3. By way of derogation of the Accounting Principles set in the Greek General Chart of Accounts, there is no provision for severance pay. On December 31st, 2015, the total sum of this non-included provision amounts to 12.000,00 € approximately. Consequently, the balance sheet lacks of provisions of 12.000,00 €, the shareholders' equity is increased by 12.000,00 € and the income statement of year 2015 are also decreased by 6.000,00 € approximately.
4. The tax liabilities of the Company have not been inspected by the competent Tax Authorities for the years 2009 to 2015. Consequently, the tax results of these corporate years have not been finalized yet. The Company has not estimated the additional taxes and increments that will probably be imposed in a future Tax Inspection, and it has not included a provision for this potential liability as well. It was not possible for us to obtain reasonable assurance during our audit as to the amount of this potential provision.

Opinion with reservations

In our opinion, except from the possible consequences of the issues raised in the previous paragraph ("Base for Opinion with Reservations"), the above financial statements present reasonably and essentially the financial position of **"KARKANIAS ENVIRONMENTAL TECHNOLOGY S.A"** as at December 31st 2015, as well as the financial performance for the year that ended that date, according to the Hellenic Accounting Standards.

Other issues

The financial statements of the Company named **"KARKANIAS ENVIRONMENTAL TECHNOLOGY S.A."** for the corporate year ended on December 31st, 2014, have been audited by a different Certified Public Accountant – Auditor who expressed his opinion with reservations on 02/06/2015 concerning the financial statements of the previous corporate year, because of a) lack of provision for doubtful receivables b) insufficient estimation of the account named "Participations in other undertakings", c) lack of provision for severance pay, d) failing to obtain reasonable audit assurance concerning the "Participations and investments income", and because of d) lack of tax provision for corporate years 2009-2014 which had not been inspected by the competent Tax Authorities.

Report on other legal and regulatory issues

We have verified the compliance and the consistency of the content of the Board of Directors' Report with the above financial statements pursuant to Codified L. 2190/1920.

Thessaloniki, 17/05/2016.
The Certified Public Accountant - Auditor
(signature)
Nikolaos St. Lazaridis
S.O.E.L (*Associated Certified Public Accountants-Auditors*) Register No 37641
Hellenic Auditing Company (HAC) S.A.
22, Kifissias str., Maroussi, ATTICA, GREECE
SOEL Register No 156

GEORGIOS KARKANIAS
PRESIDENT

03/12/18

ANNUAL FINANCIAL STATEMENTS OF 2015

Balance sheet - Separate financial statements
(financial items expressed in acquisition cost)

KARKANIAS ENVIRONMENTAL TECHNOLOGY S.A.
VAT No: 095244711,
Tax Year: 2015, Period (01/01/2015 – 31/12/2015)
Address: Industrial Zone of Larissa
GEMI No: 026564640000
Reg. No of Public Limited Companies: 48779/031/B/2001/0012
Amounts in euro

	Notes	2015	2014
FIXED ASSETS			
Tangible assets			
Land and Buildings		302.197,88	302.452,35
Mechanical Equipment		3.931,82	2.223,59
Other equipment		88.846,87	94.814,02
Total		394.976,57	399.489,96
Intangible assets			
Other intangible assets		14.500,10	29.000,10
Total		14.500,10	29.000,10
Financial assets			
Loans and receivables		870,98	842,98
Participation in joint ventures, affiliated or subsidiary companies		476.798,83	561.414,27
Total		477.669,81	562.257,25
Total fixed assets		887.146,48	990.747,31
CURRENT ASSETS			
Inventory			
Finished and semi-finished products		0,00	14.625,44
Raw materials and other materials		49.965,52	78.806,24
Advance payments for inventory		58.211,55	70.942,79
Total		108.177,07	164.374,47
Financial assets and advance payments			
Commercial receivables		1.833.045,38	1.815.363,14
Income receivable		8.753,40	12.596,13
Other receivables		152.422,97	156.351,82
Prepaid expenses		36.637,23	20.163,02
Cash flow and cash equivalents		1.156.755,10	61.661,00
Total:		3.187.614,08	2.066.135,11
Total current assets		3.295.791,15	2.230.509,58
GRAND TOTAL - ASSETS		4.182.937,63	3.221.256,89

GEORGIOS KARKANIAS
PRESIDENT

03/12/18

	Notes	2015	2014
EQUITY			
Paid-up capital			
Capital		1.346.463,00	1.346.463,00
Owners' deposits		0,00	85.000,00
Total		1.346.463,00	1.431.463,00
Fair value balances			
Differences in the Tangible assets value		13,21	13,21
Total		13,21	13,21
Reserves and Profits carried forward			
Reserves required by Law or Articles of Association		577.346,24	547.824,42
Tax-free reserves		23.316,19	23.316,19
Profits carried forward		662.945,32	103.880,68
Total		1.263.607,75	675.021,29
Total equity		2.610.083,96	2.106.497,50
LIABILITIES			
Long-term liabilities			
Government grants		2.342,21	2.342,21
Total		2.342,21	2.342,21
Short term liabilities			
Bank loans		8.677,79	218.311,70
Commercial liabilities		1.142.016,60	679.085,25
Income tax		126.712,99	0,00
Other taxes and duties		34.126,59	23.530,29
Social security		16.692,00	13.182,80
Other liabilities		212.642,24	172.565,81
Payable expenses		29.643,25	5.741,33
Total		1.570.511,46	1.112.417,18
Total Liabilities		1.572.853,67	1.114.759,39
GRAND TOTAL – EQUITY, PROVISIONS AND LIABILITIES		4.182.937,63	3.221.256,89

GEORGIOS KARKANIAS
PRESIDENT

03/12/18

Income statement - Separate financial statements on Thursday, December 31st, 2015.

KARKANIAS ENVIRONMENTAL TECHNOLOGY S.A.

VAT No: 095244711,

Tax Year: 2015, Period (01/01/2015 – 31/12/2015)

Address: Industrial Zone of Larissa

GEMI No: 026564640000

Reg. No of Public Limited Companies: 48779/031/B/2001/0012

Amounts in euro

		Notes	2015	2014
Turnover (net)	4.405.564,01			
Turnover (joint ventures)	1.959.213,57			
Total turnover	**6.364.777,58**			
Turnover (net)			4.405.564,01	3.339.263,47
Cost of sales			3.778.681,77	2.775.920,81
Gross operating result			**626.882,24**	**563.342,66**
Other operating income			120.026,32	72.251,98
			746.908,56	**635.594,64**
Administrative expenses			222.451,54	193.265,92
Other expenses and losses			27.146,87	282.217,79
Participations and investments income			0,00	7.705,37
Other income and profits			420.882,67	6.705,70
Results (before taxes and interests)			**918.192,82**	**174.522,00**
Credit interests and similar income			5,15	26.342,21
Debit interests and similar expenses			70.628,72	108.702,55
Results (before taxes)			**847.569,25**	**92.161,66**
Income taxes			258.982,79	73.513,18
Results (after taxes)			**588.586,46**	**18.648,48**

Larissa, April 30th, 2016.

The Chairman & Managing Director	The Vice-Chairman of the Board of Directors	The Accountant,
(Signature)	*(Signature)*	*(Signature)*
Apostolos Karkanias	Stamatia Karkania	Athina Liampa
ID Card: AK 407118	ID Card: AK407174	H.E.C. Licence No: 98019/ Class A'

GEORGIOS KARKANIAS PRESIDENT

03/12/18

APPENDIX (NOTES) ON THE FINANCIAL STATEMENTS

OF KARKANIAS ENVIRONMENTAL TECHNOLOGY S.A.

ON DECEMBER 31ST 2015

as required by Art. 29 of L.4308/2014

a) GENERAL INFORMATION ABOUT THE COMPANY (par. 3, Art. 29) [1]

1. Commercial Name: KARKANIAS ENVIRONMENTAL TECHNOLOGY S.A.
2. Legal Form: Public Limited Company *(Société Anonyme)*
3. Reporting Period: 01/01/2015 – 31/12/2015
4. Registered Seat: Industrial Zone of Larissa
5. Reg. No of Public Limited Companies: 48779/031/B/2001/0012
6. General Commercial Register [GEMI] No: 026564640000
7. The Company operates in a going concern status.
8. The Company belongs to the entities described in par. 2(a) of Art. 1 and it is classified to the category of the small entities described in Art. 2 of L.4308/2014.
9. The financial statements which are attached herein have been prepared in full compliance with L.4308/2014.
10. The amounts of the financial statements are expressed in euro (€), which is also the functional currency of the Company.

b) FACTORS AFFECTING THE GOING CONCERN OF THE COMPANY (par. 4, Art. 29)

The Company has conducted the relevant assessment and it has not discovered any factors that may affect the Company's status as a going concern.

c) ACCOUNTING POLICIES (par. 5, Art. 29)

In order to monitor the additional elements of the financial statements, the Company applies the following accounting policies:

1. The owner-occupied estates are measured at their acquisition costs minus the depreciations and the impairment losses, when it is deemed that these impairment losses are permanent. The annual depreciation coefficient for these elements is 4%, which reflects their expected useful life.
2. The estate investments are measured at their acquisition costs minus the depreciations and the impairment losses, when it is deemed that these impairment losses are permanent. The annual depreciation coefficient for these elements is 4%, which reflects their expected useful life.
3. The rest of the tangible assets are measured at their acquisition costs minus the depreciations and the impairment losses, when it is deemed that these impairment losses are permanent. The annual depreciation coefficient for these elements, which reflects their expected useful life, is presented in the following table:

No	Description	Depreciation coefficient
1	Mechanical Equipment	10%
2	Transportation equipment (passenger cars and freight wagons)	16% -12%
3	PC equipment	20%
4	Other equipment	10%

GEORGIOS KARKANIAS
PRESIDENT

03/12/18

4. The biological assets are measured at their acquisition costs minus the depreciations and the impairment losses, when it is deemed that these impairment losses are permanent. The depreciation coefficient for these elements is 10% and it reflects their expected useful life which is estimated at 10 years.
5. The rest of the fixed tangible assets are deleted when they are sold or when the Company does not expect any future economic profits from their use or sale.
6. The intangible assets are recognized initially at their acquisition cost. Afterwards:
    a. the intangible assets with limited useful life are measured at their acquisition costs minus the depreciations and the impairment losses, when it is deemed that these impairment losses are permanent. The depreciation of intangible assets with predefined time of use shall take place within this time period. The assets whose time of use is not predefined conventionally are depreciated based on their expected useful life.
    b. The intangible assets with unlimited useful life or whose useful life cannot be defined in a credible way are measured at their acquisition cost minus the depreciations (depreciation coefficient: 10%) and minus the impairment losses, when it is deemed that these impairment losses are permanent.
7. The investments in joint ventures, affiliated or subsidiary undertakings, as well as the rest participations are measured at their acquisition cost minus the impairment losses when it is deemed that these losses are permanent. The dividends from these investments are recognized as income in the income statement of the year of their approval by the competent bodies.
8. The rest of the fixed financial assets ("loans and receivables" and "debit titles") are measured at their acquisition cost minus the impairment losses, when it is deemed that these losses are permanent.
9. At the appropriation of the tangible, intangible and financial assets, the balance between the book value and the appropriation value is recognized as profit/loss in the income statement.
10. Every type of inventory (finished and partly finished products, merchandise, raw materials, biological inventory) is measured at its lowest value, between the acquisition value and the net realizable value. The acquisition cost of the inventory is defined by the method of the weighted average cost. The loss which results from measuring the inventory at their net realizable value, when this value is lower than the acquisition cost, is recognized in the impairment losses and burdens cost of sales on the operating results table. In case of particularly increased impairment losses of the inventory, the related amounts are included in the item entitled "Assets impairment (net amount)" on the Income statement table so as to guarantee the fair representation.
11. The commercial receivables and the rest of the receivables are measured at their acquisition cost minus the estimated impairment losses.
12. The advance payments are recognized initially at their acquisition cost (paid amounts). Afterwards, they are measured at their initial acquisition cost minus the used amounts and the impairment losses, in compliance with the accrued principle.
13. The rest and non financial assets are recognized initially at their acquisition cost. Afterwards, they are measured at their lowest value between the acquisition cost and their deprival value.
14. The items of the equity are recognized and measured at their notional amounts, which have been either received or paid. The cost which is directly linked to an item of the equity is recorded by extracting this item from the equity, provided that this is important for the financial statements; otherwise, this amount is recognized as an expense for the year concerned.

GEORGIOS KARKANIAS
PRESIDENT

03/12/18

15. The provisions for post-employment benefits are recognized and measured at their notional amounts set by the Law at the date of the balance sheet.
16. The rest of the provisions are recognized and measured at the notional amount which shall be claimed for their settlement.
17. The financial liabilities are recognized and measured at their notional amounts.
18. The government grants concerning the assets are recognized initially as liabilities for the period they were received or for the period they were finally approved and it became certain that they would be received. The government grants are recognized with the amounts received or finally approved. Afterwards, these grants are depreciated as they are transferred to the Income statement as an income for the same period and with the same way they were transferred to the results of the book value of the item granted. The government grants which concern the expenses are recognized initially as liabilities for the period they were received or for the period they were approved and it became certain that they would be received. The government grants which concern the expenses are transferred to the income statement as an income for the period these granted expenses burden the results.
19. The non financial liabilities are recognized and measured at their notional amount which is expected to be received for their settlement.
20. Any balances resulting from the revaluation or the settlement of the non financial liabilities, including the provisions, are recognized as profits or losses for the period they occur.
21. The current income tax is recognized as an expense in the income statement and it consists of the income tax set by the Tax Legislation, the balances from the Tax audit and any surcharges.
22. The income from the sales of goods are recognized when: a) the essential risks and benefits linked to their ownership are transferred to the purchaser, b) the goods are accepted by the purchaser and c) the economic benefits from this exchange can be measured with credibility and their inflow in the entity is highly probable. The income from the provision of services is recognized based on the completion percentage, provided that the inflow of the exchange's economic benefit is highly probable; otherwise, and in case there is no essential consequence in the financial statements, any income from the provision of services is measured with the method of the completed convention. The income from the interests is calculated with the method of the accruals principle. The dividends or the income from the Company's participation in the equity of other entities are recognized as income when they are approved by the competent body which decides on their appropriation. The rights are recognized as income based on the related conventional terms.
23. The expenses are recognized in the Income statement based on the accruals principle.
24. The exchanges in a foreign currency are converted, at their initial recognition, into the currency used in the balance sheet of the entity, based on the exchange rate of the date the exchange At the end of the reporting period: a) the monetary items are converted with the closing exchange rate of the date of the balance sheet, b) the non-monetary items which are expressed in a foreign currency and which are measured at their acquisition cost are converted into the currency used in the balance sheet with the exchange rate of the initial recognition. Any differences in the exchange rates which result from the settlement of the monetary items or from their conversion into an exchange rate different than the one used at the initial recognition or than the one used at the preparation of previous financial statements, are recognized in the Income statement of the period they occur.
25. Any changes in the accounting policies and any corrections of errors are recognized retrospectively by correcting:

GEORGIOS KARKANIAS
PRESIDENT

03/12/18

a. The book values of the assets, liabilities and equity concerning the cumulative impact of this change at the beginning or ending of the comparative and current reporting period, and
b. The income, profits, expenses and losses concerning the impact on the accounting numbers of the comparative period.

There has been no need to proceed in such corrections for the current reporting period.

26. Any changes in the accounting estimations are recognized in the period they occur or affect and in future periods, depending on the case. These changes are not recognized retrospectively.
27. The values of assets and liabilities at the date of the balance sheet are adjusted if there is objective evidence that adjusting events have occurred after this date and they impose the adjustment. These adjustments shall take place only until the date of signature of the financial statements by the Board of Directors. The non-adjusting events which occur after the date of the balance sheet are included in the notes of the financial statements, if they are of significant importance.
28. The errors are corrected once they are detected.

D. DEVIATIONS FROM THE LAW IN ORDER TO ACHIEVE THE FAIR PRESENTATION OF THE FINANCIAL STATEMENTS (par. 6, Art. 29)

In the reporting year there has been no need for such a deviation.

E. RELATIONS OF AN ASSET OR LIABILITY WITH MORE THAN ONE ITEMS OF THE BALANCE SHEET (par. 7, Art. 29)

There are no assets or liabilities related to more than one items of the balance sheet.

F. ANALYSES OF THE ITEMS OF THE FINANCIAL STATEMENTS

1. Tangible, intangible and biological assets (par. 8, Art. 29)

The table below presents the information concerning the transfer and accordance of the items of the tangible, biological and intangible assets.

	OWN-OCCUPIED ESTATE						Intangible
	10. Land	**11.Shaping of land subjected to depreciation**	**12. Buildings – technical works**	**13. Mechanical equipment**	**14. Transportation equipment**	**Other equipment**	**18.03 Other intangible assets**
	-1	-2	-3	-4	-5	-6	-13
Gross book value on 01.01.2015	299.809,18	0,00	1.264.652,40	385.045,17	226.875,18	283.857,24	317.375,41
Additions	0,00	0,00	0,00	8.530,06	3.791,00	23.278,21	1.672,00
Interests	0,00	0,00	0,00	0,00	0,00	0,00	0,00
Reductions	0,00	0,00	0,00	0,00	0,00	0,00	0,00
Transportation	0,00	0,00	0,00	0,00	0,00	0,00	0,00
Other	0,00	0,00	0,00	0,00	0,00	0,00	0,00
Gross book value on 31.12.2015	**299.809,18**	**0,00**	**1.264.652,40**	**393.575,23**	**230.666,18**	**307.135,45**	**319.047,41**
Accumulated depreciations and	0,00	0,00	1.262.009,23	382.821,58	156.898,04	259.020,36	288.375,31

GEORGIOS KARKANIAS
PRESIDENT

03/12/18

impairments on 01.01.2015							
Depreciations	0,00	0,00	254,47	6.821,83	13.947,71	19.088,65	16.172,00
Reductions of the depreciated items	0,00	0,00	0,00	0,00	0,00	0,00	0,00
Impairments	0,00	0,00	0,00	0,00	0,00	0,00	0,00
Reversal of Impairments	0,00	0,00	0,00	0,00	0,00	0,00	0,00
Other impairment reductions	0,00	0,00	0,00	0,00	0,00	0,00	0,00
Accumulated depreciations on 31.12.2015							
Accumulated impairments on 31.12.2015	**0,00**	**0,00**	**1.262.263,70**	**389.643,41**	**170.845,75**	**278.109,01**	**304.547,31**
Net book value on 31.12.2015	**299.809,18**	**0,00**	**2.388,70**	**3.931,82**	**59.820,43**	**29.026,44**	**14.500,10**

2. Measurement of assets at their fair value (par. 10, Art. 29).
Not applicable.

3. Securities on the Company's assets (par. 13, Art. 29)
Not applicable.

4. Provisions.
A provision of the amount of €18.706,83 has been made, which burdened the other expenses and losses included in the income statement and it concerns the loss by the doubtful debt of the entity's client named "Emery Winery S.A."
The rest of the provisions for doubtful debts of the previous period which amounts to €127.505,21 concerns the loss by a doubtful debt of the client named "Domotechniki S.A.".

5. Long-term liabilities which become due in more than five years (par. 14, Art. 29)
Not applicable

6. Financial commitments, guarantees or contingencies (contingent liabilities) which are not included in the balance sheet (par. 16, Art. 29)
There are letters of guarantee in the National Bank of Greece, in the Piraeus Bank and the ΤΣΜΕΔΕ[1] which amount to €62.033,93, €727.607,88 and €1.444.593,40 respectively.

7. Short-term liabilities
The commercial liabilities consist of the following:

[1] (Translator's Note): Greek Pension Fund for Engineers and Public Works' Contractors.

GEORGIOS KARKANIAS
PRESIDENT

03/12/18

	31/12/2015	31/12/2014
Commercial liabilities		
Advance payments from clients	93.354,01	17.371,09
Suppliers	604.937,16	421.219,29
Payable cheques	443.725,43	240.494,87
Total	**1.142.016,60**	**679.085,25**

The rest of the liabilities consist of the following:

	31/12/2015	31/12/2014
Other liabilities		
Payable staff remunerations	22.147,59	43.468,24
Short-term liabilities to partners	173.190,48	113.190,48
Payable dividends	4.320,40	4.320,40
Rest of liabilities	12.983,77	11.586,69
Total	**212.642,24**	**172.565,81**

8. Income and expenses of an exceptional size or frequency (par. 17, Art. 29)

Income	31/12/2015	31/12/2014
Public Works Income	3.480.603,34	2.257.717,91
Total turnover	**4.405.564,01**	**3.339.263,47**
Percentage	**79,00%**	**67,61%**
Expenses	31/12/2015	31/12/2014
Consumed A' and B' materials, Packaging materials	1.629.374,81	981.392,08
Total cost of sales	**3.778.681,77**	**2.775.920,81**
Percentage	**43,12%**	**35,35%**

The total turnover of the joint ventures the Company participates in amounts to €3.637.279,14, and the proportion of KARKANIAS ENVIRONMENTAL TECHNOLOGY S.A., based on its participation rate, amounts to €1.959.213,57. We underline the fact that the above mentioned turnover of joint ventures is not included in the Income statement of the Company, as there is no obligation to draft consolidated financial statements.

9. Interests charged to the assets' value for the reporting period (par. 18, Art. 29)

Not applicable.

10. Average number of employees and costs (par. 23a, Art. 29)

The average number of the Company's employees for the year 2015 was 23 (19 employees in the previous year).

The costs of the above employees are presented in the following table:

Wages and costs of employees	**2015**	**2014**
Wages of salaried employees	139.285,88	112.283,78
Wages of daily workers	207.314,85	251.799,81
Social security and benefits	122.034,86	127.498,98
Cost of staff training	265,99	700,00

GEORGIOS KARKANIAS
PRESIDENT

03/12/18

Total	468.901,58	492.282,57

11. Advance payments and credits granted to the members of the Board of Directors (par. 25, Art. 29)
Not applicable.

G. METHOD OF TRANSITION TO THE GREEK ACCOUNTING STANDARDS (ΕΛΠ) AND CONSEQUENCES UPON THE ITEMS OF THE STATEMENTS.

No full retrospective adjustment of the balance sheet items of the Company occurred at the date of transition (01.01.2014), in compliance with par.2, Art. 37 of the Law; the acquisition values are fair. As a result and in compliance with par. 3(a1) of Art.37 of the Law, the Company has adopted the book values of the balance sheet at the date of transition as deemed cost of the related items, according to the Greek Accounting Standards.

It is particularly noted that:

The balance sheet item entitled as "Other intangibles" refers to the "Other installation expenses" item, based on the provisions of the previous Accounting Framework. The related item is not recognized in the Accounting Framework of the Greek Accounting Standards; however, it shall be included in the balance sheet by virtue of par. 5 of Art. 37 of the Law, until it is totally depreciated by the annual coefficient of 10% on the acquisition value.

The items of the year 2014 (comparative year) have been rearranged, in relation to the statements of the year 2014, for comparison reasons:

1. In the income statement of the year 2014 and especially in the Appropriation results of the year 2014 appears the expense of €73.513,18 which concerned an income tax.
2. The total equity of the Balance sheet on 31.12.2014 appears reduced by €2.342,21 and it concerns government grants which are included in the long-term liabilities by virtue of the new Accounting Framework.
3. The account of the rest of provisions which amounts to 127.505,21 and which concerns a provision for doubtful debts is presented as a reduction from the item of the commercial receivables

Larissa, April 30th, 2016.

The Chairman & Managing Director *(Signature)* Apostolos Karkanias ID Card: AK 407118	The Vice-Chairman of the Board of Directors *(Signature)* Stamatia Karkania ID Card: AK407174	The Accountant, Athina Liampa *(Signature)* Athina Liampa H.E.C. Licence No: 98019/ Class A'

GEORGIOS KARKANIAS
PRESIDENT

03/12/18

OFFICIAL TRANSLATION FROM THE GREEK LANGUAGE

I, the undersigned certified translator, do hereby certify that the foregoing is a true translation of the attached Greek Report of the Board of Directors of "Karkanias Environmental Technology S.A." which was signed by the Chairman and the Vice-Chairman of the Board, as well as the Certified Public Accountant-Auditor on April 30th 2016, pursuant to Presidential Decree No.169/17.6.2002.

Larissa, 04/10/16

KONSTANTINA MICHAILAKI
Certified Translator
Ionian University Graduate
1, Marinou Antypa str., GR-412 22
Larissa - Tel. +30 2410 548996
Tax ID 066330544

Decision No 121/05
Corfu Court of First Instance

GEORGIOS KARKANIAS
PRESIDENT

03/12/18

05/12/18

KARKANIAS
ENVIRONMENTAL TECHNOLOGY SA

KARKANIAS ENVIRONMENTAL TECHNOLOGY S.A.

Industrial Area of Larissa, P.C. 41004

G.E.MI. Number 026564640000

YEARLY FINANCIAL STATEMENTS

Use

January 1st to December 31st 2016

GEORGIOS KARKANIAS
PRESIDENT

03/12/18

CONTENTS

Independent Chartered Auditor's Report 3
BALANCE SHEET OF 31/12/2016 5
RESULTS STATE DURING OPERATION 7
Annex (notes) on the financial statements of December 31st
2016 (According to the provided in article 29 of the L. 4308/2014) 8
1. Information relative to the Company (par. 3 article 29) 8
2. Factors that put the perspective of the Company as continuing
activity at risk (par. 4 article 29) 8
3. Accounting policies and assessments (par. 5 article 29) 9
4. Deviations from the provisions of the law in order to achieve a reasonable presentation of the
financial statements (par. 6 article 29) 16
5. Relations of an asset or an obligation with more than one fund of the
balance sheet (par. 7 article 29) 16
6. Fund analyses of financial statements 16
6.1 Information regarding the tangible, intangible and biological fixed assets (par. 8 article 291) 16
6.1.1 Owner-occupied tangible fixed assets 17
6.1.2. Intangible fixed assets 17
6.2 Predictions 18
6.2.1 Predictions for provisions to employees 18
6.3 Liabilities 18
6.3.1 Long-term Liabilities 18
6.3.1.1 Loans 18
6.3.2 Short-term Liabilities 18
6.3.2.1 Commercial obligations 18
6.3.2.2 Other obligations 18
6.4. Income and expenses of important amount or particular frequency or importance (par. 17 article 29) 19
6.5. Interest integrated in the value of assets in the period (par. 18 article 29) 20
6.6 Information about the personnel and the relative expenses of the period (par. 23 article 29) 20
6.7. Advance payments and credit to members of administrative, management and supervising instruments
(par. 25 article 29) 21
6.8 Use of the selection of paragraph 7 or paragraph 8 of article 16 of the law 21
6.9. Financial commitments, guarantees and potential obligations not appearing
on the balance sheet (par. 16 article 29) 21
DATA & INFORMATION FOR THE USE FROM JANUARY 1ST TO DECEMBER 31ST 2016 22

GEORGIOS KARKANTAS
PRESIDENT

03/12/18

Independent Chartered Accountant Report
To the Shareholders of the Company "KARKANIAS ENVIRONMENTAL TECHNOLOGY S.A."

Audit Report on the Financial Statements

We examined the attached financial statements of the Company**"KARKANIAS ENVIRONMENTAL TECHNOLOGY S.A."**, which comprise the balance sheet from December 31st 2016 and the results statements of the use ending on that date, as well as the relative annex.

Management responsibility for the Financial Statements

The management bears the responsibility for the compilation and reasonable presentation of those financial statements according to the Greek Accounting Standards, as well for those internal safeguards that the management determines as necessary in order to make possible the compilation of financial statements free from essential inaccuracy, due either to fraud or error.

Auditor's Responsibility

Our responsibility is to express an opinion about those financial statements based on our audit. We executed our audit according to the Audit International Standards, integrated in the Greek Legislation (GG/B72848/23.10.2012). These standards demand the observance of ethics rules, as well as the planning and execution of the audit aiming to the acquisition of reasonable assurance about whether the financial statements are free from essential inaccuracy.
The audit includes the execution of procedures for the acquisition of auditing evidence regarding the amounts and the notifications in the financial statements. The selected procedures are based on the auditor's judgement including the assessment of the financial statements essential inaccuracy risks due either to fraud or error. During the execution of these risk assessments, the auditor examines the internal safeguards relating to the compilation and reasonable presentation of the financial statements of the company, aiming to the planning of auditing procedures adequate for the circumstances, but not for the goal of expressing an opinion about the efficacy of the internal safeguards of the company. The audit also includes the assessment of the adequacy of the accounting principles and methods used and the reason of the assessment that took place by the management, as well as the assessment of the total presentation of the financial statements.
We believe that the auditing conclusions we have gathered are sufficient and adequate for the institution of establishment of our auditing opinion.

Base for Opinion with Reserve

From our audit the following have resulted:
1) In the accounts of the Current Assets are also included the demands in delay of total amount around € 597 thous., for which the executed depreciation of an amount of around € 146 thous. remains by around € 451 thous. The non execution of the necessary depreciation constitutes a deviation from the accounting principles, provided by the Greek Accounting Standards, resulting to the value of the Current Assets and own capitals appearing increased by about € 451 thous.
2) In the account "Participations in subsidiaries, affiliated and trusts", of an amount of around € 458 thous, the value of acquisition of the participations of the company in trusts is depicted, the financial statements of which are not audited by Chartered Accountants. Data regarding the reasonable value of these participations have not been taken into consideration and therefore

GEORGIOS KARKANIAS
PRESIDENT

03/12/18

we reserve the right to correctly evaluate them and the possible consequences on the results, for the closed and previous use and the company's own capitals.

- By dispensation of the accounting principles, provided by the Greek Accounting Standards, no prediction is formed for personnel compensation because of exit from service. At December 31st 2016, the total amount of the non formed prediction rises to about € 14 thous., resulting the predictions for provisions to the employees appearing decreased by about € 14 thous. and the own capitals appearing equally increased.
- The tax obligations of the company have not been examined by the tax authorities for the uses from 2009 to 2016. Therefore the tax results of these have not be made definite. The company has not advanced to an assessment of additional taxes and the accretion that will possibly be attributed to a future tax control and has not formed a relative predition for this possible obligation. From our audit, we have not acquired a reasonable assurance regarding the assessment of the amount of the possibly necessary prediction.

Opinion with Reserve

In our estimation, except the consequences of the issues mentioned in paragraph 'Base for Opinion with Reserve', the attached financial statements reasonably present, in every essential respect, the financial state of the Company "KARKANIAS ENVIRONMENTAL TECHNOLOGY S.A." at December 31st 2016 and its financial performance for the use that ended on this date, according to the Greek Accounting Standards.

Report on Other Legal and Normative Requirements

Taking into consideration that the management has the responsibility for the compilation of the Management Report of the Board of Directors, by application of the provisions of paragraph 5 article 2 (part B) of the L. 4336/2015, we note that:

A) In our estimation the Board of Directors Management Report has been compiled according to the legal requirements in force of article 43a of the Cod. L. 2190/1920 and its content corresponds to the attached financial statements of the use that ended on 31/12/2016.

B) Based on the opinion we acquired during our audit, for the company "KARKANIAS ENVIRONMENTAL TECHNOLOGY S.A." and its environment, we have not detected any essential inaccuracies in the Board of Directors Management Report.

Athens, 28 June 2017

The Chartered Auditor
(signature, seal)
Dokos Ath. Georgios
SOEL R.N. 38241

HBP Chartered Auditors Accountants LLC
Member of MorisonKSi
Ipsigeneias 81 & Velikopoulou, 14231 Athens.
SOEL R.N. 152

GEORGIOS KARKANIAS
PRESIDENT

03/12/18

BALANCE SHEET OF 31/12/2016

	Note	31/12/2016	31/12/2015
ASSETS			
Non circulating elements			
Tangible fixed			
Real estate	6.1.1	[illegible]	[illegible]
Mechanical equipment	6.1.1	3.438	3.932
Other equipment	6.1.1	67.025	88.847
Total		**372.406**	**394.977**
Intangible fixed assets			
Other intangible	6.1.2	0	14.500
Total		**0**	**14.500**
Financial property			
Loans and receivables		1.347	871
Participations in Subsidiaries, affiliated and trusts		458.478	476.799
Total		**459.825**	**477.670**
Total of non circulating		**832.231**	**887.146**
Circulating assets			
Reserves			
Ready and half-finished products		95.500	
Raw materials and various materials		210.350	49.960
Advance payments and reserves		128.773	58.212
Total		**434.622**	**108.177**
Financial elements and advance payments			
Commercial receivables		2.157.552	1.833.045
			8.753
Period earned income		496.160	152.423
Other receivables			
Prepaid expenses		54.855	30.637
Cash and cash equivalents		51.374	1.150.755
Total		**2.761.942**	**3.187.614**
Total of circulating		**3.196.564**	**3.295.791**
Total assets		**4.028.795**	**4.182.938**

GEORGIOS KARKANIAS
PRESIDENT

03/12/18

	Note	31/12/2016	31/12/2015
LIABILITIES			
NET POSITION			
Paid capitals			
Capital		1.346.463	1.346.463
Total		1.346.463	1.346.463
Differences of reasonable value			
Differences of tangible assets value		13	13
Total		13	13
Reserves and retained results			
Tax or memorandum reserves		577.346	577.346
Tax free reserves		23.316	23.316
Retained results		517.203	662.945
Total		1.117.865	1.263.608
Net position total		2.464.341	2.610.084
Liabilities			
Long-term Liabilities			2.342
Government grants			2.342
Total			
Short-term Liabilities			
Bank loans	6.3.1.1	594.479	8.678
Commercial obligations	6.3.2.1	680.946	1.142.017
Income tax		-	126.713
Other taxes and duties		19.598	34.127
Social insurance organisations		15.355	16.692
Other obligations	6.3.2.2	247.992	212.642
Use earned expenses		6.083	29.643
Total		1.564.453	1.570.511
Total liabilities		1.564.453	1.572.854
Net position total, predictions and liabilities		4.028.795	4.182.938

GEORGIOS KARKANIAS
PRESIDENT

08/12/16

RESULT STATE DURING OPERATION

	Note	01.01-31/12/2016	01.01-31/12/2015
Turnover (net)	6.4	2.658.922	4.405.564
Sales cost	6.4	(2.702.609)	(3.778.682)
Mixed Result		**(43.687)**	**626.882**
Other usual income	6.4	60.653	120.026
		16.966	**746.909**
Administration expenses	6.4	(248.290)	(222.452)
Other expenses and damages	6.4	(4.147)	(27.147)
Other income and profits	6.4	2.349	420.883
Results before interest and taxes		**(233.122)**	**918.193**
Credit interest and relevant income		141.301	5
Debit interest and relevant expenses		(53.921)	(70.629)
Results before taxes		**(145.743)**	**847.569**
Income tax		-	(258.983)
Period results after taxes		(145.743)	588.586

GEORGIOS KARKANIAS
PRESIDENT

03/12/18

Annex (notes) on the financial statements of December 31st 2016

(According to the provided by article 29 of the L. 4308/2014).

1. **Information relative with the Company (par. 3 article 29)**

A) Denomination KARKANIAS ENVIRONMENTAL TECHNOLOGY S.A.

B) Legal type: Anonymous society

C) Reference period: 1.1.2016 - 31.12.2016

D) Seat address: Industrial Area of Larissa, P.C. 41.004

E) G.E.MI.: 026564640000

F) The management estimates that the acceptance of the continuing activity is indicated for the compilation of the financial statements

G) The company belongs to the "small entity" category

H) The management declares that the financial statements have been compiled in full accordance with the L. 4308/2014

I) The amounts of the financial statements are expressed in euros, which constitutes the operating currency of the Company

J) The amounts have been rounded except if mentioned differently

The above yearly financial statements of 31/12/2016 were approved by the Board of Directors of the company on 27/06/2017, refer to the corporate use 1.1-31.12.2016 and have been compiled according to the Greek Accounting Standards (GAS) L. 4308/2014.

The present Financial Statements have been compiled based on the principle of history cost, the principle of activity continuation and are accordant to the provisions of the L. 4308/2014 Greek Accounting Standards. The compilation of the Financial Statements according to the L. 4308/2014 Greek Accounting Standards, necessitates the use of analytical accounting assessments and judgements in the application procedure of the accounting policies, which affect the remaining property elements and obligations, the notification of possible demands and obligations during the date of the Financial Statements as well as the presented income and expenses amounts during the period under investigation. Despite the fact that the assessments are based on the best possible knowledge of the company's Management, the real results may finally differ from these assessments. According to the L. 4308/2014 Greek Accounting Standards, the companies are obliged to present comparative Financial Statements, at least for one period.

2. **Factors that put the perspective of the Company as continuing activity at risk (par. 4 article 29)**

The Company executed a relative assessment and has not detected factors that set its perspective as continuing activity at risk.

GEORGIOS KARKANIAS
PRESIDENT

03/12/18

3. **Accounting policies and assessments (par. 5 article 29)**

The compilation of the financial statements presupposes the execution of a judgement and assessments by the management, which affect the application of the accounting policies, the recognized amounts of income, expenses, assets, obligations and notifications. These assessments and acceptances are based on the past experience and other factors considered reasonable for the occasion. The real events however, may differ from these assessments. The assessments and the relative acceptances are continuously re-assessed.

The accounting assessments mainly take place for the calculation of the amortizations of fixed assets, the participations, the decrease of receivables, the predictions and the assessment of reasonable value if its application is selected.

3.1. Adopted accounting policies

The company applies the adopted accounting policies for the partial elements of the financial statements, in the framework of the basic principle of earnings.

3.1.1. Tangible fixed assets

3.1.2. a) Initial registration

The tangible fixed assets include the owner-occupied real estates, the investment real estates and the biological property initially recognized in the acquisition cost, which includes each expense necessary for the element to come in the present state or position or indented use.

In particular, the cost of the self supply of fixed assets, including the biological ones, includes the cost of raw materials, expendable supplies, work and other cost relating directly to the fixed asset in question. Furthermore, it includes a reasonable analogy of fixed and variable expenses indirectly relating to the self supplied fixed asset, to the grade that these amounts refer to the construction or production period. The company does not burden the cost of the self supplied fixed assets of long period of construction or production with interests of interest-bearing obligations to the corresponding part.

B) Subsequent assessment

Subsequently of the initial registration the fixed assets are assessed to the depreciable cost (initial acquisition cost, plus any subsequent expense that fulfils the definition of asset, minus the accumulated depreciations and impairment damages).

The depreciations of tangible assets are calculated with the stable method with the following depreciation coefficients, which reflect their estimated beneficial financial life:

s/n	Description	Depreciation Coefficient	Estimated financial life
(1)	Buidlings and technical works	4%	25 years
(2)	Mechanical equipment	10%	10 years
(3)	Transport means	16%	6 years
(4)	Transport means trucks	12%	8 years

GEORGIOS KARKANIAS
PRESIDENT

03/12/18

(5)	PC equipment	20%	5 years
(6)	Furniture and other equipment	10%	10 years
(7)	Biological assets	10%	10 years

A depreciation damage is recognized when it is estimated that the accounting value of the asset has surpassed its retrievable value.

The accounting values of the fixed assets of the Company are assessed for depreciation when there are indications that their accounting values are larger than the retrievable ones or when it is estimated that the depreciation damages are of permanent character. In this case, the retrievable value of the fixed assets is calculated and if the accounting values surpass the estimated retrievable value, the relative difference is recorded as depreciation damage in the results records.

C) Deletion

The tangible assets are deleted at their sale or if the Company does not expect future financial gains from their use or their sale.

3.1.3. Intangible fixed assets

The intangible fixed assets mainly include licenses, concessions, rights, software, trade names and other expenses of long-term depreciation.

The value of software includes the cost of software purchase as well as any other expense that has taken place in order to place them in operation, decreased by the amount of accumulated depreciations and possible impairment of their value. Important subsequent expenses are capitalized in accounting software when they increase their performance beyond their original specifications.

The intangible fixed assets are initially recognized in the acquisition cost.

Subsequently of the original recognition:

A) the intangible assets with limited beneficial financial life are admeasured to the acquisition cost minus the depreciations and minus the impairment damages, when it is estimated that these (impairment damages) are of permanent character. The depreciation of the intangible assets with conventionally determined time of use takes place within this time. For the assets without conventionally determined time of use, the depreciations take place according to their estimated financial life.

B) The intangible assets with unlimited beneficial financial life, or with beneficial financial life that cannot be reliably determined, are admeasured to the acquisition cost minus depreciations with impairment coefficient 10%, and minus impairment damages when it is estimated that these (impairment damages) are of permanent character.

3.1.3. Financial property

3.1.3.1. Participations

The participations are observed in the acquisition cost subject to impairment control of their value when there are indications or events that indicate that their accounting value may not my retrievable. Impairment damages are recorded when the accounting value of the participations exceeds their retrievable value. As retrievable value is considered the

GEORGIOS KARKANIAS
PRESIDENT

03/12/10

use value which is the present value of the expected future cash flow from the participation, in the next five years and their residual value at the end of the five years.

Dividends from the investments in question are recognized as income in the results, at the time they are approved by their competent instruments.

3.1.3.2. Other financial property

A) Initial registration

All the financial assets are initially recorded at the acquisition cost, namely, the cost needed for their acquisition. The acquisition cost includes the total of cash (or cash equivalents) or the reasonable value of other exchange provided for the acquisition, plus the purchase expenses.

B) Subsequent assessment

Subsequently of the initial recording, the financial assets are estimated at their acquisition cost (nominal amounts) minus possible impairment damages, except the interest bearing financial assets, which, when the amounts, their termination time or interest rate are important, are estimated at the depreciable cost with the method of real interest rate (or with the stable method).

Impairment damage results when the accounting value of the asset is higher from the amount that the entity estimates will recover from this asset.

The amount that the entity estimates that it will recover from a financial asset is higher from:

- The present value of the amount estimated it will be recovered from this asset, calculated with the use of the initial real interest rate
- Thereasonable value of the asset, decreased with the necessary sale cost.

The impairment damages are recorded in the results statement and reversed as profits in it, when the conditions that caused them stop existing. Reversal takes place up to the value the asset would have, if no impairment damage had been recorded.

The loans and receivables expressed in foreign currency are estimated with the exchange rate of the foreign currency during the balance sheet date. The relative currency differences are recorded in the results.

C) Deletion

A financial asset is deleted when and only the conventional rights expire on the cash flow of the asset or all the risks and benefits that result from the ownership of this asset are essentially transferred.

GEORGIOS KARKANIAS
PRESIDENT

03/12/18

3.1.4. Income tax

3.1.4.1. Current tax

The current income tax includes:

- The income tax resulting according to the provisions of each tax legislation in force.
- The income tax and the accretion resulting from the tax audit.

The differences of the tax audit, are recognized in the use result record, the use during which they are certified by the tax authorities and become accepted by the Company.

3.1.4.2. Deferred taxes

Deferred taxes result when there are temporary (reversible) differences between the accounting value and the tax base of balance sheet assets.

The company has not selected the recording of deferred taxes according to the paragraph 3 of article 23 of the L. 4308/2014.

3.1.5. Reserves

A) Initial registration

The reserves are initially recorded in the acquisition cost, which includes every expense necessary for each reserve element coming to the present state or position or indented use.

In particular, the cost of the self supply reserves, including the biological ones, includes the cost of raw materials, expendable supplies, work and other cost relating directly to the assets in question. Furthermore, it includes a reasonable analogy of fixed and variable expenses indirectly relating to the self supplied asset, to the grade that these amounts refer to the production period. The company does not burden the cost of the self supplied reserves of long period of construction or maturity with interests of interest-bearing obligations to the corresponding part.

B) Subsequent assessment

Subsequently of the initial recording, the reserves are estimated to the lowest price per kind between the acquisition cost and their net liquidation value. The reserve acquisition cost is determined with the method of the weighted average term or on each case with the first-in-first-out method. In the case of valuation in the net liquidable value, the impairment damage is recorded as the sold items cost, except if it is very important, and in that case it is integrated on the fund "impairment of assets".

3.1.6. Advance payments and other non financial assets

The expenses advance payments are initially recorded at the acquisition cost (paid amounts) and are subsequently estimated at the initial acquisition cost, minus the used amounts based on the principle of earned amounts and possible impairment damages. The impairment of the advance payment expenses refers to the case in which the receiver of the

GEORGIOS KARKANIAS
PRESIDENT

03/12/18

relative amount is in no position to fulfil the commitment he/she undertook or to return the remaining amount.

The other non financial assets are initially recorded in the acquisition cost and subsequently estimated at the lowest value between acquisition cost and retrievable value, namely the amount expected to be received.

The commercial receivables and other receivables are admeasured at the acquisition cost minus the estimated impairment damages.

3.1.7. Financial obligations

A) Initial recording and subsequent evaluation

The financial obligations, as much at the initial record, as subsequently, are estimated at their nominative amounts, except the ones of long-term termination, which are estimated on their depreciable cost with the method of real interest rate (or the stable method). The financial obligations expressed in foreign currency are estimated with the exchange rate of the foreign currency during the balance sheet date. The relative currency differences are recorded in the results.

B) Deletion

A financial obligation is deleted if and only when the conventional commitment is fulfilled, cancelled or terminated, namely, when the conventional commitment that created does not exist any more.

3.1.8. Non financial obligations

A) Initial recording and subsequent evaluation

The non financial obligations are initially recorded and subsequently estimated at their nominative cost expected to be demanded for their settlement. Differences that result either during their re-assessment, or during the settlement of the non financial obligations are recorded as profits or damages of the period in which they arise.

B) Deletion

A non financial obligation is deleted if and only when the conventional commitment is fulfilled, cancelled or terminated, namely, when the conventional commitment that created it does not exist anymore.

3.1.9. Predictions

The predictions are initially recorded and subsequently estimated on the nominative amount it is expected to be demanded for their settlement, except if their estimation in the present value of the amount expected to be demanded for their settlement has an important effect on the amounts of the financial records.

In particular, the possible obligations for provisions to employees after their exit of the service, as they result from the labour legislation (L. 2112/1920), are not recognized on the financial records of 31/12 but recorded when they become definite.

GEORGIOS KARKANDAS
PRESIDENT

03/12/18

3.1.10. State subsidiaries

The state subsidiaries referring to the assets are initially recognized as obligations for the period they are collected or the period when their approval becomes definite and certainty exists that they will be collected. The state subsidiaries are recognized with the amounts collected or definitely approved. Subsequent to the initial recognition, the state subsidiaries are depreciated with their transfer to the results as income, in the same period and in a way respective of the transfer in the results of the accounting value of the asset that was subsidized. The state subsidiaries referring to expenses are initially recognized as obligations for the period they are collected or the period when their approval becomes definite and certainty exists that they will be collected. The state subsidiaries referring to expenses are transferred to the results as income in the period in which the subsidized expenses bear on the results.

3.1.11. Income and expenses

The company records the income and the expenses, when they become earned.

In particular:

- The income from the sale of goods are recorded in the period in which they become earned and if all the following conditions are fulfilled:
  - ✓ The essential risks and benefits connected with their ownership are transferred to the buyer.
  - ✓ The goods become accepted by the buyer.
  - ✓ The financial benefits from the transaction can be estimated as reliable and their inflow in the entity can be considered very likely.
- The income from the provision of services and the constructing contracts are recorded with the method of completion percentage and if the inflow of the financial benefit of the transactions is considered very likely. Alternatively and when there is no essential consequence on the financial records, the income from the provision of services is admeasured with the method of complete contract.
- The income originating from the use of the entity's assets by third parties are recorded as follows:
  - ✓ The income from interest is considered based on the earned principle.
  - ✓ The dividends and income of similar nature from the participation in the net position of other entities when approved by the competent instrument that decided for their distribution.
  - ✓ The rights according to the relative conventional terms.
- The expenses are recognized in the results condition based of the earned principle.

3.1.12. Transactions in foreign currency

The transactions in foreign currency are transformed at the initial recognition to the currency in which the financial statements of the entity are compiled with the valid exchange rate during the transaction. At the end of each reference period: (a) the currency elements are transformed with the closing exchange rate at the date of the balance sheet, (b) the non currency elements expressed on foreign currency and admeasured at the acquisition cost, are transformed with

GEORGIOS KARKANTIAS
PRESIDENT

02/12/18

the exchange rate of the initial recognition. The currency differences arising from the settlement of currency elements or their transformation with different exchange rate from the exchange rate during the initial recognition or during the compilation of subsequent financial records, are recognized the results of the period in which they arise.

3.1.13. Net position elements

The net position funds are initially recorded and subsequently estimated at the nominative amounts that have been received or paid.

3.1.14. Potential assets and potential obligations

These assets refer to potential rights and commitments respectively, which arise from past events and their existence will be confirmed only if one or more uncertain future events take place or not, which are not fully under the control of the Company. These elements are notified in the notes of the financial statements.

3.1.15. Events after the balance sheet date

The values of assets and obligations at the date of the balance sheet are adjusted, if there is an objective indication that corrective events after this date enforce adjustment in their value. These adjustments take place for such events, until the date of approval of the financial statements by the Board of Directors. The non corrective, after the balance sheet date, events, are notified if they are important on the notes of the financial statements.

3.1.16. Important accounting assessments and admissions

The assessments and admissions are continuously assessed and based on the historical experience and on other factors, including the expected future events that, under the present conditions, are expected to take place.

3.2. Modification of accounting policies, modification of accounting assessments and correction of errors of previous periods

3.2.1. Modification of accounting policies

The modifications of accounting policies are recorded with retrospective reformulation of the financial statements of all the periods published together with the statements of the current period, in order to present comparable funds.

No need for such modification arose in the current period.

3.2.2 Modification of accounting assessments

The modifications of accounting assessments are recorded in the period, in which it is ascertained that they result and affect this period for future period, on each case. These modifications are not retrospectively recognized.

GEORGIOS KARKANIAS
PRESIDENT

03/12/18

3.2.3. Correction of errors of previous periods

The corrections of errors are recorded with the retrospective correction of financial statements of all the periods published together with the statements of the current period.

No error of previous period was detected in the present period.

4. Deviations from the provisions of the law in order to achieve a reasonable presentation of the Financial statements (par. 6 article 29)

When, in exceptional cases, the company deviates from the application of a provision of the law in order to fulfil the obligation of reasonable presentation of the financial statements, it notifies and adequately justifies this deviation.

No need for such deviation arose in the current period.

5. Relations of an asset or an obligation with more that one fund of the balance sheet (par. 7 article 29)

There are no assets or obligations relating to more than one fund of the balance sheet.

6. Fund analyses of financial statements

6.1 Information regarding the tangible, intangible and biological fixed assets (par. 8 article 29)

The information regarding the movement and accordance of the accounts of tangible assets are presented in the following tables

GEORGIOS KARKANIAS
PRESIDENT

03/12/16

6.1.1 Owner-occupied tangible fixed assets

6.1.1 Owner-occupied tangible fixed assets

Modification table of owner-occupied tangible fixed assets	Plots	Buildings	Mechanical equipment	Transportation means	Furniture and other equipment
Acquisition value					
Balance 1.1.2015	299.809	1.264.652	385.045	226.875	283.857
Period additions			8.530	3.791	23.278
Balance 31.12.2015	277.809	1.264.652	393.575	230.666	307.135
Accumulated amortizations and impairments					
Balance 1.1.2015		1.262.009	382.822	156.898	259.020
Period amortization		254	6.822	13.948	19.089
Balance 31.12.2015	-	1.262.264	389.643	170.846	278.109
Net accounting value 31.12.2015	277.809	2.389	3.932	59.820	29.026
Acquisition value					
Balance 1.1.2016	299.809	1.264.652	393.575	230.666	307.135
Period additions					2.697
Balance 31.12.2015	299.809	1.264.652	393.575	230.666	309.832
Accumulated amortizations and impairments					
Balance 1.1.2016		1.262.264	389.643	170.846	278.109
Period amortizations		254	494	13.297	11.222
Balance 31.12.2016	-	1.262.518	390.137	184.143	289.331
Net accounting value 31.12.2016	279.807	2.134	3.438	46.523	20.502

6.1.2. Intangible fixed assets

Modification table of intangible fixed assets	Other intangible assets
Acquisition value	
Balance 1.1.2015	317.375
Period additions	1.672
Balance 31.12.2015	319.047
Accumulated amortizations and impairments	
Balance 1.1.2015	288.375
Period amortizations	16.172
Balance 31.12.2015	304.547
Net accounting value 31.12.2015	14.500
Acquisition value	
Balance 1.1.2016	319.047
Period additions	1.672
Balance 31.12.2016	320.719
Accumulated amortizations and impairments	
Balance 1.1.2016	304.547
Period amortizations	16.172
Balance 1.1.2016	320.719
Net accounting value 31.12.2016	0

GEORGIOS KARKANIAS
PRESIDENT

03/12/18

6.2 Predictions

6.2.1.Predictions for provisions to employees

The potential obligations for provisions to employees after their exit from service, as they result from the labour legislation (L. 2112/1920), are not recognized in the financial statements of 31/12, but are recorded when they become definite.

6,3. Liabilities

6.3.1 Long-term Liabilities

6.3.1.1 Loans

A) Loans guarantees (par. 13 article 29)

No tangible guarantees on owner-occupied or investment real estate exist.

B) Time of the termination of the loan obligations (par. 14 article 29)

Termination balance	Bank loans	Total
Short-term part:		
Up to 1 year	594.479	594.479
Total short-term part	594.479	594.479
Long-term part		
1 to 2 years		-
2 to 5 years	-	-
Over 5 years	-	-
Total long-term part	-	-
GENERAL TOTAL	594.479	594.479

6.3.2 Short-term obligations

6.3.2.1 Commercial obligations

The commercial obligations are analysed on the following table

Commercial obligations	31/12/2016	31/12/2015
Obligations to suppliers	484.597	604.937
Clients' advance payments	81.506	93.354
Payable checks	114.844	443.725
Total	680.946	1.142.017

6.3.2.1 Other obligations

The other obligations are analysed on the following table:

GEORGIOS KARKANIAS
PRESIDENT

03/12/48

Other obligations	31/12/2016	31/12/2015
Payable personnel salary	17.788	22.148
Short-term obligations to shareholders	223.190	173.190
Payable dividends	-	4.320
Other obligations	7.013	12.984
Total	**247.992**	**212.642**

6.4 Income and expenses of important amount or particular frequency or importance (par. 17 article 29)

An analysis of this income and expenses follows on the tables below:

Turnover	31/12/2016	31/12/2015
Activity categories		
Industrial activity	2.658.922	4.405.564
Total	**2.658.922**	**4.405.564**

The turnover of trusts in which the company participates based on the participation percentage is:

Net income from participation in trusts	Trust income	Participation percentage %	Company income
Trust KARKANIAS ENVIRONMENTAL TECHNOLOGY SA DIALYNAS SA	0,00	50,00	0,00
Trust KARKANIAS ENVIRONMENTAL TECHNOLOGY SA TSIOMITAS LABROS APOSTOLOU	7.016,40	95,30	6.686,63
Trust TEMKAT CONSTRUCTIONS SA KARKANIAS AS	5,00	30,00	1,50
Trust KARKANIAS ENVIRONMENTAL TECHNOLOGY SA ARCHON ANS	706.770,16	50,00	353.385,08
KARKANIAS S.A MONTENEGRO	543.606,00	100,00	543.606,00
	Turnover from trusts		903.679,21
	Company turnover		2.658.922,11
	Total turnover		3.562.601,32

Sales cost	31/12/2016	31/12/2015
Personnel remuneration and expenses	384.598	391.720
Other remuneration and third party expenses	972.970	1.487.767
Third party provisions	95.135	87.389
Expenses from taxes and duties	7.999	7.978
Other expenses	152.059	106.384
Depreciation expenses	23.335	31.688
Sold merchandise cost	1.066.513	1.663.755
Total	**2.702.609**	**3.778.682**

GEORGIOS KARKANIAS
PRESIDENT

03/12/18

Administration expenses	31/12/2016	31/12/2015
Personnel remuneration and expenses	75.778	77.181
Other remuneration and third party expenses	26.574	13.184
Third party provisions	22.524	31.219
Expenses from taxes and duties	13.443	11.163
Various expenses	91.867	65.108
Depreciations	18.104	24.597
Total	248.290	222.452

Other usual income	31/12/2016	31/12/2015
Subsidianes	13.385	72.540
Leases	47.238	47.358
Other income	30	129
Total	60.653	120.026

Other expenses and damages	31/12/2016	31/12/2015
Extraordinary and non-operating expenses	1.640	1.774
Extraordinary damages	1.526	-
Expenses of previous uses	982	6.666
Predictions for precarious receivables	-	18.707
Total	4.147	27.147

Other income and profits	31/12/2016	31/12/2015
Extraordinary and non-operating income	2.349	1
Income of previous uses	-	420.882
Total	2.349	420.883

6.5. Interest integrated in the value of assets in the period (par. 18 article 29)

No interest was integrated in the value of the constructed assets, during this period.

6.6 Information about the personnel and the relative expenses of the period (par. 23 article 29)

The average personnel of the company during the 2016 period has as follows:

	31/12/2016	31/12/2015
Administrative personnel	8	9
Technical personnel	12	14
Total	20	23

The total personnel cost is analysed in the following table:

	31/12/2016	31/12/2015
Salaries and wages	353.516	346.601
Social expenses	106.660	122.035
Subsequent provisions	200	266
Total	460.376	468.902

GEORGIOS KARKANIAS
PRESIDENT

03/12/18

6.7. **Advance payments and credit to members of administrative, management and supervising instruments (par. 25 article 29)**

The company does not provide advance payments and credit to members of the Board.

6.8. **Use of the selection of paragraph 7 or paragraph 8 of article 16 of the law**

The company does not belong to the category of very small entities.

6.9. **Financial commitments, guarantees and potential obligations not appearing on the balance sheet (par. 16 article 29)**

A) Financial commitments

The Company has not drawn determinable contracts of operating leases regarding the leasing of real estate

B) Guarantees

The Company has not provided letters of guarantee to various third parties, analysis of which follows on the table below:

	31/12/2016	31/12/2015
Good work execution	156.176	789.642
Other guarantees to third parties	-	-
Total	156.176	789.442

C) Potential obligations

The tax obligations of the company have not been examined by the tax authorities for the uses from 2009 to 2016. Therefore the tax results of these uses have not be made definite. The company has not advanced to an assessment of additional taxes and the accretion that will possibly be attributed to a future tax control and has not formed a relative prediction for this possible obligation.

Larissa, June 27 2017

THE PRESIDENT & MANAGING DIRECTOR	THE MANAGING DIRECTOR	THE ACCOUNTANT
GEORGIOS P. KARKANIAS	**VASILIKI KARKANIA**	**GEROGIANNI EIRINI**
I.D. No. AK 407117	**I.D. No. AK 407175**	**G.P. LICENSE R.N. 0107975/A' CLASS**
(signature)	(signature)	(signature)

GEORGIOS KARKANIAS
PRESIDENT

03/12/18

DATA & INFORMATION OF THE USE FROM JANUARY 1ST TO DECEMBER 31ST 2016

COMPANY "KARKANIAS ENVIRONMENTAL TECHNOLOGY S.A."

BALANCE SHEET OF DECEMBER 31ST 2016 (Use 01.01.2016 – 31.12.2016) G.E.MI. No.: 029.564.640.000

	31.12.2016	31.12.2015		31.12.2016	31.12.2015
ASSETS			LIABILITIES		
Non-current assets:			Net equity:		
Tangible assets			Paid-in capital:		
Land, plots	304.487	302.194	Common	1.384.847	1.384.847
Machinery and equipment	4.855	5.810	Total	1.384.847	1.384.847
Other equipment	17.025	16.513	Differences from ownership value		
Total	326.367	324.517	Favorable (unfavorable) differences	31	31
Intangible asset items			Total	31	31
Financial investments	37	13.381	Retained and reserve earnings		
Total	37	13.381	Law on forced reserves	277.369	277.369
Financial assets			Tax free reserves	23.316	23.316
Assets and receivables	2.327	811	Retained profit	617.261	662.918
Participations in subsidiaries, affiliated and others	156.276	156.276	Total	1.317.946	1.363.603
Total	158.603	157.087	Provisions & Expenses		
Total non-circulating (net)	484.971	494.985	Net position (net)	2.702.824	2.748.482
Circulating assets:					
Inventory:			Obligations:		
Raw and auxiliary products	45.666		Long-term obligations		
Work in progress and semi-finished products	231.376	48.966	Other liabilities		2.342
Advances, prepayments and orders	238.732	2.000	Total		2.342
Total	515.774	50.966	Bank loans	304.000	44.454
Trade, settlement and other receivables:			Suppliers' obligations	248.966	1.145.017
Customer receivables	2.357.952	1.431.365	Income tax		326.013
Prepaid expenses		9.351	Other taxes and duties	19.564	34.157
Other receivables	344.196	172.423	Social insurance organizations	13.755	14.962
Prepaid expenses	14.008	16.847	Other obligations	510.992	312.642
Cash and cash equivalents	53.375	2.114.751	Expense settlements	4.000	25.941
Total	2.769.531	3.747.116	Total	1.100.276	1.903.174
Circulating (net)	3.285.305	3.797.782	Obligations (net)	1.102.276	1.905.516
Asset - total	3.770.276	4.292.767	Net position, provisions and obligations (total)	3.770.276	4.292.767

ON AGREEMENT STATEMENT OF THE CHARGE FOR THE PERIOD 01/01/2016 - 31/12/2016

	31.12.2016	31.12.2015
Turnover (net)	2.836.962	2.601.864
Sales cost	(2.370.445)	(2.170.852)
Gross profit	466.517	430.992
Other operating income	69.855	71.607
	536.372	502.599
Administrative expenses	(254.294)	(221.459)
Distribution expenses (and charges)	(111.137)	(99.134)
Other operating expenses	(1.148)	(191.007)
Income from participations	1.000	1.000
Income from interest and similar	1.000	1.000
Other income from financial operations	343.933	0
Interest and other financial expenses	(13.912)	(12.609)
Profit (losses) before income tax	402.314	81.390
Income tax	(127.972)	(35.827)
Profit (losses) after tax	274.342	45.563
Profit (losses) after tax from discontinued operations (Transfer)	(319.999)	(1.411.871)

Athens, June 2017

THE BoD PRESIDENT

GEORGIOS KARKANIAS
I.D. No. AE 077***

THE ACCOUNTANT-DIRECTOR

GEORGIOS KARKANIS
I.D. No. AE 24***

THE AUDIT FIRM

Certified Public
G.P. LICENSE R.A. 0107975AT CLASS

Independent Chartered Accountant Report
To the Shareholders of the Company "KARKANIAS ENVIRONMENTAL TECHNOLOGY S.A."

Audit Report on the Financial Statements

We examined the attached audited statements of the Company "KARKANIAS ENVIRONMENTAL TECHNOLOGY S.A.", which comprise the balance sheet from December 31st 2016 and the related statements of the use ending on that date, as well as the report of profit.

Management responsibility for the Financial Statements

The management bears the responsibility for the compilation and reasonable presentation of these financial statements according to the Greek Accounting Standards, as well for those internal safeguards that the management determines as necessary in order to make possible the compilation of financial statements free from essential inaccuracy, due either to fraud or error.

Auditor's Responsibility

Our responsibility is to express an opinion about these financial statements based on our audit. We executed our audit according to the Audit International Standards, integrated in the Greek legislation (ΟΔΔΠ/Φ54/8720 το 2012). These standards demand the observance of ethics rules, as well as the planning and execution of the audit aiming at the acquisition of reasonable assurance about whether the financial statements are free from essential inaccuracy.

The audit includes the execution of procedures for the acquisition of auditing evidence regarding the amounts and the publication in the financial statements. The selected procedures are based on the auditor's judgements including the assessment of the financial statements' essential inaccuracy risks due either to fraud or error. During the execution of these risk assessments, the auditor examines the internal safeguards relating to the composition and reasonable presentation of the financial statements of the company, aimed to the planning of auditing procedures adequate for the circumstances, but not for the goal of expressing an opinion about the efficacy of the internal safeguards of the company. The audit also includes the assessment of the adequacy of the accounting principles and methods used and the reason of the accounts estimates took place by the management, as well as the assessment of the total presentation of the financial statements.

We believe that the auditing conclusions we have gathered are sufficient and adequate for the execution of (presentation of our auditing opinion.

Basis for Opinion with Reserve

From our audit the following have resulted:

1) In the accounts of the current Assets are also included the amounts in delay of total amount around € 597 thous., for which the executed depreciation of an amount of around € 146 thous. remains as around € 451 thous. The non-execution of the necessary depreciation constitutes a deviation from the accounting principles, provided by the Greek Accounting Standards, resulting to the value of the Current assets and own capital's appearing increased by about € 451 thous.

3) In the account "Participations in subsidiaries, affiliates and other" of an amount of around € 456 thous. the value of acquisition of the participations of the company in shares is detected, the financial statements of which are not audited by Chartered Accountants. Data regarding the reasonable value of these participations have not been taken into consideration and therefore we reserve the right to correctly evaluate them and the possible consequences on the results, for the closed and previous, use and the company's own capital.

5) By dispensation of the accounting principles, provided by the Greek Accounting Standards, no provision is formed for personnel compensation because of exit from service. As December 31st 2016, the total amount of the non formed provision rises to about € 12 thous. resulting the provisions for provisions to the employees appearing decreased by about € 12 thous. and the own capital's appointed equity increased.

6) The tax obligations of the company have not been examined by the tax authorities for the years from 2008 to 2016. Therefore the tax results of these have not or more before. The company has not attended to an assessment of additional taxes and the accretion that will possibly be attributed to a future tax control and has not formed a reserve provision for the possible obligation. From our audit, we have not acquired a reasonable assurance regarding the assessment of the amount of the possibly necessary provision.

Opinion with Reserve

In our estimation, except the consequences of the issues mentioned in paragraph "Basis for Opinion with Reserve", the attached financial statements reasonably present, in every essential respect, the financial state of the Company "KARKANIAS ENVIRONMENTAL TECHNOLOGY S.A." at December 31st 2016 and its financial performance for the use that ended on that date, according to the Greek Accounting Standards.

Report on Other Legal and Supervising Requirements

Taking into consideration that the management has the responsibility for the compilation of the Management Report of the Board of Directors, in application of the provisions of paragraph 5 article 2 (part B) of the L. 4336/2015, we note that:

At our estimation the Board of Directors Management Report has been compiled according to the legal requirements in force of article 43a of the Cod. L. 2190/1920 and its contents corresponds to the attached financial statements of the use that ended on 31/12/2016.

Based on the opinion we acquired during our audit, for the company "KARKANIAS ENVIRONMENTAL TECHNOLOGY S.A." (and its environment), we have not detected any essential inaccuracies in the Board of Directors Management Report.

Athens, 28 June 2017

The Chartered Auditor
(signature, seal)
Dimos Ath. Georgiou
SOEL R.N. 30274

HLB Chatzinikas Auditors accountants LLC
Member of Moore HLB
Syngrou Ave. 6 & Vasilissis Olgas, 14231 Athens
SOEL R.N. 182

GEORGIOS KARKANIAS
PRESIDENT

03/12/18

Exact Translation from the attached Greek Original
Larissa 06-07-2017
The official translator

Sokratis Kyriazis

NETWORK OF TRANSLATION CENTERS
ERMINIA
SOKRATIS KYRIAZIS
TEL. & FAX 2410 626055
VAT 045564280

GEORGIOS KARKANIAS
PRESIDENT

03/12/18

ΚΑΡΚΑΝΙΑΣ

ΚΑΡΚΑΝΙΑΣ ΤΕΧΝΟΛΟΓΙΑ ΠΕΡΙΒΑΛΛΟΝΤΟΣ Α.Ε.

Βιομηχανική Περιοχή Λάρισας, Τ.Κ. 41004

Αριθμός Γ.Ε.ΜΗ. 026564640000

ΕΤΗΣΙΕΣ ΧΡΗΜΑΤΟΟΙΚΟΝΟΜΙΚΕΣ ΚΑΤΑΣΤΑΣΕΙΣ

χρήσεως

1 Ιανουαρίου έως 31 Δεκεμβρίου 2016

GEORGIOS KARKANIAS
PRESIDENT

03/12/18

ΠΕΡΙΕΧΟΜΕΝΑ

Έκθεση Ανεξάρτητου Ορκωτού Ελεγκτή Λογιστή 3
ΙΣΟΛΟΓΙΣΜΟΣ της 31/12/2016 5
ΚΑΤΑΣΤΑΣΗ ΑΠΟΤΕΛΕΣΜΑΤΩΝ ΚΑΤΑ ΛΕΙΤΟΥΡΓΙΑ 7
Προσάρτημα (σημειώσεις) επί των χρηματοοικονομικών καταστάσεωντης31ης Δεκεμβρίου 2016(Σύμφωνα με όσα προβλέπονται στο άρθρο 29 του Ν.4308/2014) 8
1. Πληροφορίες σχετικές με την Εταιρεία (παρ. 3 άρθρου 29) 8
2. Παράγοντες που θέτουν σε κίνδυνο την προοπτική της Εταιρείας ως συνεχιζόμενης δραστηριότητας(παρ. 4 άρθρου 29) 8
3. Λογιστικές πολιτικές και εκτιμήσεις (παρ. 5 άρθρου 29) 9
4. Παρεκκλίσεις από τις διατάξεις του νόμου προκειμένου να επιτευχθεί εύλογη παρουσίαση των χρηματοοικονομικών καταστάσεων (παρ. 6 άρθρου 29) 16
5. Σχέσεις ενός περιουσιακού στοιχείου ή μιας υποχρεώσεως με περισσότερα από ένα κονδύλια του ισολογισμού (παρ. 7 άρθρου 29) 16
6. Αναλύσεις κονδυλίων χρηματοοικονομικών καταστάσεων 16
6.1. Πληροφορίες σχετικά με ενσώματα, άυλα και βιολογικά πάγια περιουσιακά στοιχεία (παρ. 8 άρθρου 29) 16
6.1.1.Ιδιοχρησιμοποιούμενα ενσώματα πάγια περιουσιακά στοιχεία 17
6.1.2. Άυλα πάγια περιουσιακά στοιχεία 17
6.2 Προβλέψεις 18
6.2.1.Προβλέψεις για παροχές σε εργαζομένους 18
6.3. Υποχρεώσεις 18
6.3.1 Μακροπρόθεσμες Υποχρεώσεις 18
6.3.1.1 Δάνεια 18
6.3.2 Βραχυπρόθεσμες Υποχρεώσεις 18
6.3.2.1 Εμπορικές υποχρεώσεις 18
6.3.2.2 Λοιπές υποχρεώσεις 18
6.4.Έσοδα και έξοδα σημαντικού ποσού ή ιδιαίτερης συχνότητας ή σημασίας (παρ. 17 άρθρου 29) 19
6.5. Τόκοι που ενσωματώθηκαν στην αξία περιουσιακών στοιχείων στην περίοδο (παρ. 18 άρθρου 29) 20
6.6.Πληροφορίες για το προσωπικό και τις σχετικές δαπάνες της περιόδου (παρ. 23 άρθρου 29) ..20
6.7. Προκαταβολές και πιστώσεις σε μέλη διοικητικών, διαχειριστικών και εποπτικών οργάνων (παρ. 25 άρθρου 29) 21
6.8. Χρήση της επιλογής της παραγράφου 7 ή της παραγράφου 8 του άρθρου 16 του νόμου 21
6.9. Χρηματοοικονομικές δεσμεύσεις, εγγυήσεις, και ενδεχόμενες υποχρεώσεις που δεν εμφανίζονται στον ισολογισμό (παρ. 16 άρθρου 29) 21
ΣΤΟΙΧΕΙΑ & ΠΛΗΡΟΦΟΡΙΕΣ ΧΡΗΣΕΩΣ ΑΠΟ 1Η ΙΑΝΟΥΑΡΙΟΥ ΕΩΣ 31Η ΔΕΚΕΜΒΡΙΟΥ 2016 22

GEORGIOS KARKANIA
PRESIDENT

03/12/18

Έκθεση Ανεξάρτητου Ορκωτού Ελεγκτή Λογιστή
Προς τους Μετόχους της Εταιρείας «ΚΑΡΚΑΝΙΑΣ ΤΕΧΝΟΛΟΓΙΑ ΠΕΡΙΒΑΛΛΟΝΤΟΣ Α.Ε.»

Έκθεση Ελέγχου επί των Χρηματοοικονομικών Καταστάσεων

Ελέγξαμε τις συνημμένες χρηματοοικονομικές καταστάσεις της Εταιρείας **«ΚΑΡΚΑΝΙΑΣ ΤΕΧΝΟΛΟΓΙΑ ΠΕΡΙΒΑΛΛΟΝΤΟΣ Α.Ε.»**, οι οποίες αποτελούνται από τον ισολογισμό της 31ης Δεκεμβρίου 2016 και τις καταστάσεις αποτελεσμάτων της χρήσεως που έληξε την ημερομηνία αυτή, καθώς και το σχετικό προσάρτημα.

Ευθύνη της Διοίκησης για τις Χρηματοοικονομικές Καταστάσεις

Η διοίκηση έχει την ευθύνη για την κατάρτιση και εύλογη παρουσίαση αυτών των χρηματοοικονομικών καταστάσεων σύμφωνα με τα Ελληνικά Λογιστικά Πρότυπα, όπως και για εκείνες τις εσωτερικές δικλίδες που η διοίκηση καθορίζει ως απαραίτητες ώστε να καθίσταται δυνατή η κατάρτιση χρηματοοικονομικών καταστάσεων απαλλαγμένων από ουσιώδη ανακρίβεια, που οφείλεται είτε σε απάτη είτε σε λάθος.

Ευθύνη του Ελεγκτή

Η δική μας ευθύνη είναι να εκφράσουμε γνώμη επί αυτών των χρηματοοικονομικών καταστάσεων με βάση τον έλεγχό μας. Διενεργήσαμε τον έλεγχό μας σύμφωνα με τα Διεθνή Πρότυπα Ελέγχου, που έχουν ενσωματωθεί στην Ελληνική Νομοθεσία (ΦΕΚ/Β'/2848/23.10.2012). Τα πρότυπα αυτά απαιτούν να συμμορφωνόμαστε με κανόνες δεοντολογίας, καθώς και να σχεδιάζουμε και διενεργούμε τον έλεγχο με σκοπό την απόκτηση εύλογης διασφάλισης για το εάν οι χρηματοοικονομικές καταστάσεις είναι απαλλαγμένες από ουσιώδη ανακρίβεια.
Ο έλεγχος περιλαμβάνει τη διενέργεια διαδικασιών για την απόκτηση ελεγκτικών τεκμηρίων, σχετικά με το ποσό και τις γνωστοποιήσεις στις χρηματοοικονομικές καταστάσεις. Οι επιλεγόμενες διαδικασίες βασίζονται στην κρίση του ελεγκτή περιλαμβανομένης της εκτίμησης των κινδύνων ουσιώδους ανακρίβειας των χρηματοοικονομικών καταστάσεων, που οφείλεται είτε σε απάτη είτε σε λάθος. Κατά τη διενέργεια αυτών των εκτιμήσεων κινδύνου, ο ελεγκτής εξετάζει τις εσωτερικές δικλίδες που σχετίζονται με την κατάρτιση και εύλογη παρουσίαση των χρηματοοικονομικών καταστάσεων της εταιρείας, με σκοπό το σχεδιασμό ελεγκτικών διαδικασιών κατάλληλων για τις περιστάσεις, αλλά όχι με σκοπό την έκφραση γνώμης επί της αποτελεσματικότητας των εσωτερικών δικλίδων της εταιρείας. Ο έλεγχος περιλαμβάνει επίσης την αξιολόγηση της καταλληλότητας των λογιστικών αρχών και μεθόδων που χρησιμοποιήθηκαν και του εύλογου των εκτιμήσεων που έγιναν από τη διοίκηση, καθώς και αξιολόγηση της συνολικής παρουσίασης των χρηματοοικονομικών καταστάσεων.
Πιστεύουμε ότι τα ελεγκτικά τεκμήρια που έχουμε συγκεντρώσει είναι επαρκή και κατάλληλα για τη θεμελίωση της ελεγκτικής μας γνώμης.

Βάση για Γνώμη με Επιφύλαξη

Από τον έλεγχο μας προέκυψαν τα εξής:
1) Στους λογαριασμούς του Κυκλοφορούντος Ενεργητικού περιλαμβάνονται και απαιτήσεις σε καθυστέρηση, συνολικού ποσού € 597 χιλ. περίπου, για τις οποίες η διενεργηθείσα απομείωση ποσού € 146 χιλ. περίπου υπολείπεται της απαιτούμενης κατά € 451 χιλ. περίπου. Η μη διενέργεια της απαιτούμενης απομείωσης συνιστά παρέκκλιση από τις λογιστικές αρχές, που προβλέπονται από τα Ελληνικά Λογιστικά Πρότυπα, με συνέπεια, η αξία του Κυκλοφορούντος Ενεργητικού και τα ίδια κεφάλαια να εμφανίζονται αυξημένα κατά € 451 χιλ. περίπου.
2) Στο λογαριασμό «Συμμετοχές σε θυγατρικές, συγγενείς και κοινοπραξίες», ποσού € 458 χιλ. περίπου, απεικονίζεται η αξία κτήσης των συμμετοχών της εταιρείας σε κοινοπραξίες, οι χρηματοοικονομικές καταστάσεις των οποίων δεν ελέγχονται από Ορκωτούς Ελεγκτές Λογιστές. Δεν τέθηκαν υπόψη μας στοιχεία σχετικά με την εύλογη αξία των συμμετοχών αυτών και συνεπώς

GEORGIOS KARKANIAS
PRESIDENT

03/12/18

διατηρούμε επιφύλαξη για την ορθή αποτίμηση τους και τις ενδεχόμενες επιπτώσεις στα αποτελέσματα, για την κλειόμενη και την προηγούμενη χρήση καθώς και στα ίδια κεφάλαια της εταιρείας.
3) Κατά παρέκκλιση των λογιστικών αρχών, που προβλέπονται από τα Ελληνικά Λογιστικά Πρότυπα, δεν σχηματίζεται πρόβλεψη για αποζημίωση προσωπικού λόγω εξόδου από την υπηρεσία. Κατά την 31η Δεκεμβρίου 2016, το συνολικό ύψος της μη σχηματισθείσας πρόβλεψης ανέρχεται σε € 14 χιλ. περίπου, με συνέπεια οι προβλέψεις για παροχές σε εργαζομένους να εμφανίζονται μειωμένες κατά € 14 χιλ. περίπου και τα ίδια κεφάλαια να εμφανίζονται ισόποσα αυξημένα.
4) Οι φορολογικές υποχρεώσεις της εταιρίας δεν έχουν εξεταστεί από τις φορολογικές αρχές για τις χρήσεις από 2009 έως 2016. Ως εκ τούτου τα φορολογικά αποτελέσματα των χρήσεων αυτών δεν έχουν καταστεί οριστικά. Η εταιρία δεν έχει προβεί σε εκτίμηση των πρόσθετων φόρων και των προσαυξήσεων που πιθανόν να καταλογιστούν σε μελλοντικό φορολογικό έλεγχο και δεν έχει σχηματίσει σχετική πρόβλεψη για αυτή την ενδεχόμενη υποχρέωση. Από τον έλεγχό μας, δεν έχουμε αποκτήσει εύλογη διασφάλιση σχετικά με την εκτίμηση του ύψους της πρόβλεψης που τυχόν απαιτείται.

Γνώμη με Επιφύλαξη

Κατά τη γνώμη μας, εκτός από τις επιπτώσεις των θεμάτων που μνημονεύονται στην παράγραφο 'Βάση για Γνώμη με Επιφύλαξη', οι συνημμένες χρηματοοικονομικές καταστάσεις παρουσιάζουν εύλογα, από κάθε ουσιώδη άποψη, την οικονομική θέση της Εταιρείας «ΚΑΡΚΑΝΙΑΣ ΤΕΧΝΟΛΟΓΙΑ ΠΕΡΙΒΑΛΛΟΝΤΟΣ Α.Ε.» κατά την 31η Δεκεμβρίου 2016 και τη χρηματοοικονομική της επίδοση για τη χρήση που έληξε την ημερομηνία αυτή, σύμφωνα με τα Ελληνικά Λογιστικά Πρότυπα.

Έκθεση επί Άλλων Νομικών και Κανονιστικών Απαιτήσεων

Λαμβάνοντας υπόψη ότι η διοίκηση έχει την ευθύνη για την κατάρτιση της Έκθεσης Διαχείρισης του Διοικητικού Συμβουλίου, κατ' εφαρμογή των διατάξεων της παραγράφου 5 του άρθρου 2 (μέρος Β) του Ν. 4336/2015, σημειώνουμε ότι:
α) Κατά τη γνώμη μας η Έκθεση Διαχείρισης του Διοικητικού Συμβουλίου έχει καταρτισθεί σύμφωνα με τις ισχύουσες νομικές απαιτήσεις του άρθρου 43α του Κωδ. Ν. 2190/1920 και το περιεχόμενο αυτής αντιστοιχεί με τις συνημμένες χρηματοοικονομικές καταστάσεις της χρήσης που έληξε την 31/12/2016.
β) Με βάση τη γνώση που αποκτήσαμε κατά το έλεγχό μας, για την Εταιρεία «ΚΑΡΚΑΝΙΑΣ ΤΕΧΝΟΛΟΓΙΑ ΠΕΡΙΒΑΛΛΟΝΤΟΣ Α.Ε.» και το περιβάλλον της, δεν έχουμε εντοπίσει ουσιώδεις ανακρίβειες στην Έκθεση Διαχείρισης του Διοικητικού της Συμβουλίου.

Αθήνα, 28 Ιουνίου 2017

Ο Ορκωτός Ελεγκτής Λογιστής

Δόκος Αθ. Γεώργιος
Α.Μ. ΣΟΕΛ 38241

HBP Ορκωτοί Ελεγκτές Λογιστές Ε.Π.Ε.
Μέλος της MorisonKSi
Ιφιγενείας 81 & Βελικοπούλου, 142 31 Αθήνα
Α.Μ. ΣΟΕΛ 152

GEORGIOS KARKANIAS PRESIDENT

03/12/18

ΙΣΟΛΟΓΙΣΜΟΣ της 31/12/2016

	Σημ.	31.12.2016	31.12.2015
ΕΝΕΡΓΗΤΙΚΟ			
Μη κυκλοφορούντα στοιχεία			
Ενσώματα πάγια			
Ακίνητα	6.1.1	301.943	302.198
Μηχανολογικός εξοπλισμός	6.1.1	3.438	3.932
Λοιπός εξοπλισμός	6.1.1	67.025	88.847
Σύνολο		372.406	394.977
Άυλα πάγια στοιχεία			
Λοιπά άυλα	6.1.2	0	14.500
Σύνολο		0	14.500
Χρηματοοικονομικά περιουσιακά στοιχεία			
Δάνεια και απαιτήσεις		1.347	871
Συμμετοχές σε θυγατρικές, συγγενείς και κοινοπραξίες		458.478	476.799
Σύνολο		459.825	477.670
Σύνολο μη κυκλοφορούντων		832.231	887.146
Κυκλοφορούντα περιουσιακα στοιχεία			
Αποθέματα			
Έτοιμα και ημιτελή προϊόντα		95.500	
Πρώτες ύλες και διάφορα υλικά		210.350	49.966
Προκαταβολές για αποθέματα		128.773	58.211
Σύνολο		434.622	108.177
Χρηματοοικονομικά στοιχεία και προκαταβολές			
Εμπορικές απαιτήσεις		2.157.552	1.833.045
Δοσμένα έσοδα περιόδου			8.753
Λοιπες απαιτήσεις		498.160	152.423
Προπληρωμένα έξοδα		54.855	36.637
Ταμειακά διαθέσιμα και ισοδύναμα		51.374	1.156.755
Σύνολο		2.761.942	3.187.614
Σύνολο κυκλοφορούντων		3.196.564	3.295.791
Σύνολο ενεργητικού		4.028.795	4.182.938

GEORGIOS KARKANIAS
PRESIDENT

03/12/18

	Σημ.	31.12.2016	31.12.2015
ΠΑΘΗΤΙΚΟ			
ΚΑΘΑΡΗ ΘΕΣΗ			
Καταβλημένα κεφάλαια			
Κεφάλαιο		1.346.463	1.346.463
Σύνολο		**1.346.463**	**1.346.463**
Διαφορές εύλογης αξίας			
Διαφορές αξίας ενσωμάτων παγίων		13	13
Σύνολο		13	13
Αποθεματικά και αποτελέσματα εις νέο			
Αποθεματικά νόμων ή καταστατικού		577.346	577.346
Αφορολόγητα αποθεματικά		23.316	23.316
Αποτελέσματα εις νέο		517.203	682.945
Σύνολο		1.117.865	1.283.608
Σύνολο καθαρής θέσης		2.464.341	2.610.084
Υποχρεώσεις			
Μακροπρόθεσμες Υποχρεώσεις			
Κρατικές επιχορηγήσεις			2.342
Σύνολο		-	2.342
Βραχυπρόθεσμες Υποχρεώσεις			
Τραπεζικά δάνεια	6.3.1.1	594.479	8.678
Εμπορικές υποχρεώσεις	6.3.2.1	580.946	1.142.017
Φόρος εισοδήματος			126.713
Λοιποί φόροι και τέλη		19.598	34.127
Οργανισμοί κοινωνικής ασφάλισης		15.355	16.692
Λοιπές υποχρεώσεις	6.3.2.2	247.992	212.642
Έξοδα χρήσεως δουλευμένα		6.083	25.643
Σύνολο		1.564.453	1.570.511
Σύνολο υποχρεώσεων		1.564.453	1.572.854
Σύνολο καθαρής θέσης, προβλέψεων και υποχρεώσεων		4.028.795	4.182.938

GEORGIOS KARKANIAS
PRESIDENT

03/12/18

ΚΑΤΑΣΤΑΣΗ ΑΠΟΤΕΛΕΣΜΑΤΩΝ ΚΑΤΑ ΛΕΙΤΟΥΡΓΙΑ

	Σημ.	01.01-31.12.2016	01.01-31.12.2015
Κύκλος εργασιών (καθαρός)	6.4	2.658.922	4.405.564
Κόστος πωλήσεων	6.4	(2.702.609)	(3.778.682)
Μικτό Αποτέλεσμα		(43.687)	626.882
Λοιπά συνήθη έσοδα	6.4	60.653	120.026
		16.966	746.909
Έξοδα διοίκησης	6.4	(248.290)	(222.452)
Λοιπά έξοδα και ζημιές	6.4	(4.147)	(27.147)
Λοιπά έσοδα και κέρδη	6.4	2.349	420.883
Αποτελέσματα προ τόκων και φόρων		(233.122)	918.193
Πιστωτικοί τόκοι και συναφή έσοδα		141.301	5
Χρεωστικοί τόκοι και συναφή έξοδα		(53.921)	(70.629)
Αποτέλεσμα προ φόρων		(145.743)	847.569
Φόροι εισοδήματος		-	(258.983)
Αποτέλεσμα περιόδου μετά από φόρους		(145.743)	588.586

GEORGIOS KARKANIS PRESIDENT

GEORGIOS KARKANIS PRESIDENT

03/12/18

Προσάρτημα (σημειώσεις) επί των χρηματοοικονομικών καταστάσεωντης31ης Δεκεμβρίου 2016(Σύμφωνα με όσα προβλέπονται στο άρθρο 29 του Ν.4308/2014)

1. Πληροφορίες σχετικές με την Εταιρεία (παρ. 3 άρθρου 29)

α)Επωνυμία: ΚΑΡΚΑΝΙΑΣ ΤΕΧΝΟΛΟΓΙΑ ΠΕΡΙΒΑΛΛΟΝΤΟΣ Α.Ε.

β) Νομικός τύπος: Ανώνυμη εταιρεία

γ) Περίοδος αναφοράς: 1.1.2016 - 31.12.2016

δ) Διεύθυνση της έδρας: Βιομηχανική Περιοχή Λάρισας, Τ.Κ. 41004

ε) ΓΕ.ΜΗ.: 026564640000

στ) Η διοίκηση εκτιμά ότι η παραδοχή της συνεχιζόμενης δραστηριότητας είναι ενδεδειγμένη για την κατάρτιση των χρηματοοικονομικών καταστάσεων

ζ) Η εταιρεία ανήκει στην κατηγορία «μικρήοντότητα»

η) Η διοίκηση δηλώνει ότι οι χρηματοοικονομικές καταστάσεις έχουν καταρτιστεί σε πλήρη συμφωνία με τον Ν. 4308/2014

θ) Τα ποσά των χρηματοοικονομικών καταστάσεων εκφράζονται σε ευρώ, που αποτελεί το λειτουργικό νόμισμα της Εταιρείας

ι) Τα ποσά δεν έχουν στρογγυλοποιηθεί εκτός αν αναφέρεται διαφορετικά

Οι ανωτέρω ετήσιες χρηματοοικονομικές καταστάσεις της 31/12/2016 εγκρίθηκαν από το Διοικητικό Συμβούλιο της εταιρείας την 27/06/2017, αφορούν την εταιρική χρήση 1.1-31.12.2016 και έχουν συνταχθεί σύμφωνα με τα Ελληνικά Λογιστικά Πρότυπα (ΕΛΠ) Ν.4308/2014.

Οι παρούσες Χρηματοοικονομικές Καταστάσεις έχουν συνταχθεί με βάση την αρχή του ιστορικού κόστους, την αρχή της συνέχισης της δραστηριότητας και είναι σύμφωνες με τις διατάξεις του Ν. 4308/2014 Ελληνικά Λογιστικά Πρότυπα. Η κατάρτιση των Χρηματοοικονομικών Καταστάσεων σύμφωνα με το Ν. 4308/2014 Ελληνικά Λογιστικά Πρότυπα, απαιτεί τη χρήση αναλυτικών λογιστικών εκτιμήσεων και κρίσεων στη διαδικασία εφαρμογής των λογιστικών πολιτικών, που επηρεάζουν τα υπόλοιπα των περιουσιακών στοιχείων και υποχρεώσεων, τη γνωστοποίηση ενδεχομένων απαιτήσεων και υποχρεώσεων κατά την ημερομηνία των Χρηματοοικονομικών Καταστάσεων καθώς και τα παρουσιαζόμενα ποσά εσόδων και εξόδων κατά τις υπό εξέταση περιόδους. Παρά το γεγονός ότι οι εκτιμήσεις βασίζονται στην καλύτερη δυνατή γνώση της Διοίκησης της εταιρίας, τα πραγματικά αποτελέσματα ενδέχεται τελικά να διαφέρουν από τις εκτιμήσεις αυτές. Βάσει του Ν. 4308/2014 Ελληνικά Λογιστικά Πρότυπα, οι εταιρίες είναι υποχρεωμένες να παρουσιάσουν συγκριτικές Χρηματοοικονομικές Καταστάσεις, τουλάχιστον για μία περίοδο.

2. Παράγοντες που θέτουν σε κίνδυνο την προοπτική της Εταιρείας ως συνεχιζόμενης δραστηριότητας(παρ. 4 άρθρου 29)

Η Εταιρεία διενήργησε σχετική αξιολόγηση και δεν εντόπισε παράγοντες που θέτουν σε κίνδυνο την προοπτική της ως συνεχιζόμενη δραστηριότητα.

GEORGIOS KARKANIAS
PRESIDENT

03/12/18

3. Λογιστικές πολιτικές και εκτιμήσεις (παρ. 5 άρθρου 29)

Η σύνταξη των οικονομικών καταστάσεων προϋποθέτει την άσκηση κρίσης και την διενέργεια εκτιμήσεων από την διοίκηση, τα οποία επηρεάζουν την εφαρμογή των λογιστικών πολιτικών, τα αναγνωριζόμενα ποσά των εσόδων, εξόδων, περιουσιακών στοιχείων, υποχρεώσεων και γνωστοποιήσεων. Αυτές οι εκτιμήσεις και παραδοχές βασίζονται στην εμπειρία του παρελθόντος και σε λοιπούς παράγοντες που θεωρείται ότι είναι εύλογα για τις περιστάσεις. Τα πραγματικά γεγονότα όμως, μπορεί να διαφέρουν από αυτές τις εκτιμήσεις. Οι εκτιμήσεις και οι σχετικές παραδοχές επανεκτιμούνται σε συνεχή βάση.

Οι λογιστικές εκτιμήσεις γίνονται κυρίως για τον υπολογισμό των αποσβέσεων των παγίων, τις συμμετοχές, την απομείωση των απαιτήσεων, τις προβλέψεις και την εκτίμηση της εύλογης αξίας εφόσον επιλέγεται η εφαρμογή της.

3.1. Ακολουθούμενες λογιστικές πολιτικές

Η εταιρεία για τα επιμέρους στοιχεία των χρηματοοικονομικών καταστάσεων εφαρμόζει τις ακόλουθες λογιστικές πολιτικές, στα πλαίσια της βασικής αρχής του δουλευμένου.

3.1.1. Ενσώματα πάγια περιουσιακά στοιχεία

α) Αρχική καταχώριση

Τα ενσώματα πάγια περιουσιακά στοιχεία, περιλαμβάνουν τα ιδιοχρησιμοποιούμενα ακίνητα, τα επενδυτικά ακίνητα και τα βιολογικά περιουσιακά στοιχείαναγνωρίζονται αρχικά στο κόστος κτήσεως, το οποίο περιλαμβάνει κάθε δαπάνη που απαιτείται για να έλθει το στοιχείο στην παρούσα κατάσταση ή θέση ή επιδιωκόμενη χρήση.

Ειδικότερα το κόστος των ιδιοπαραγόμενων πάγιων στοιχείων, συμπεριλαμβανομένων των βιολογικών, περιλαμβάνει το κοστος πρωτων υλών, αναλώσιμων υλικών, εργασίας και άλλο κόστος που σχετίζεται άμεσα με το εν λόγω πάγιο στοιχείο. Επιπλέον περιλαμβάνει μια εύλογη αναλογία σταθερών και μεταβλητών εξόδων που σχετίζονται έμμεσα με το ιδιοπαραγόμενο πάγιο στοιχείο, στο βαθμό που το ποσά αυτά αναφέρονται στην περίοδο κατασκευής ή παραγωγής. Η εταιρεία δεν επιβαρύνει το κόστος των ιδιοπαραγόμενων πάγιων στοιχείων μακράς περιόδου κατασκευής ή παραγωγής με τόκους εντόκων υποχρεώσεων κατά το μέρος που αναλογούν σε αυτό.

β) Μεταγενέστερη αποτίμηση

Μεταγενέστερα της αρχικής καταχωρίσεως τα πάγια περιουσιακά στοιχεία αποτιμούνται στο αποσβέσιμο κόστος (αρχικό κόστος κτήσεως, πλέον κάθε μεταγενέστερη δαπάνη που πληροί τον ορισμό του περιουσιακού στοιχείου, μείον σωρευμένες αποσβέσεις και ζημίες απομειώσεως).

Οι αποσβέσεις των ενσωμάτων παγίων υπολογίζονται με την σταθερή μέθοδο με τους ακόλουθους συντελεστές απόσβεσης, οι οποίοι αντανακλούν την εκτιμώμενη ωφέλιμη οικονομική ζωή τους:

α/α	Περιγραφή	Συντελεστής απόσβεσης	Εκτιμώμενη οικονομική ζωή
(1)	Κτίρια και τεχνικά έργα	4%	25 έτη
(2)	Μηχανολογικός εξοπλισμός	10%	10 έτη
(3)	Μεταφορικά μέσα επιβατικά	16%	6 έτη
(4)	Μεταφορικά μέσα φορτηγά	12%	8 έτη

GEORGIOS KARKANTAS
PRESIDENT

03/12/18

(5)	Εξοπλισμός Η/Υ	20%	5 έτη
(6)	Έπιπλα και λοιπός εξοπλισμός	10%	10 έτη
(7)	Βιολογικά περιουσιακά στοιχεία	10%	10 έτη

Ζημία απομειώσεωςαναγνωρίζεται όταν εκτιμάται ότι η λογιστική αξία του στοιχείου έχει υπερβεί την ανακτήσιμη αξία του.

Οι λογιστικές αξίες των πάγιων περιουσιακών στοιχείων της Εταιρείας ελέγχονται για απομείωση όταν υπάρχουν ενδείξεις ότι οι λογιστικές αξίες τους είναι μεγαλύτερες από τις ανακτήσιμες ή όταν κρίνεται ότι οι ζημίες απομείωσης είναι μόνιμου χαρακτήρα. Στην περίπτωση αυτή υπολογίζεται η ανακτήσιμη αξία των πάγιων περιουσιακών στοιχείων και αν οι λογιστικές αξίες υπερβαίνουν την εκτιμώμενη ανακτήσιμη αξία, η σχετική διαφορά καταχωρίζεται ως ζημία απομείωσης στην κατάσταση αποτελεσμάτων.

γ) Διαγραφή

Τα ενσώματα πάγια στοιχεία διαγράφονται κατά την πώλησή τους ή αν η Εταιρεία δεν αναμένει μελλοντικά οικονομικά οφέλη από τη χρησιμοποίησή τους ή την πώλησή τους.

3.1.2. Άυλα πάγια περιουσιακά στοιχεία

Τα άυλα πάγια περιουσιακά στοιχεία περιλαμβάνουν κυρίως άδειες, παραχωρήσεις, δικαιώματα, λογισμικά προγράμματα, εμπορικές επωνυμίες, και λοιπά έξοδα πολυετούς απόσβεσης.

Η αξία των λογισμικών προγραμμάτων περιλαμβάνει το κόστος αγοράς λογισμικών προγραμμάτων καθώς και κάθε δαπάνη που έχει πραγματοποιηθεί προκειμένου αυτά να τεθούν σε καθεστώς λειτουργίας, μειωμένη κατά το ποσό των σωρευμένων αποσβέσεων και τυχόν απομειώσεων της αξίας τους. Σημαντικές μεταγενέστερες δαπάνες κεφαλαιοποιούνται στα λογισμικά προγράμματα όταν προσαυξάνουν την απόδοση τους πέραν των αρχικών προδιαγραφών.

Τα άυλα πάγια περιουσιακά στοιχεία αναγνωρίζονται αρχικά στο κόστος κτήσης.

Μεταγενέστερα της αρχικής αναγνώρισης:

α) τα άυλα στοιχεία με περιορισμένη ωφέλιμη οικονομική ζωή επιμετρώνται στο κόστος κτήσης μείον αποσβέσεις και μείον ζημίες απομείωσης, όταν κρίνεται ότι αυτές (ζημίες απομείωσης) είναι μόνιμου χαρακτήρα. Η απόσβεση των άυλων στοιχείων με συμβατικά καθοριζόμενο χρόνο χρήσης γίνεται εντός του χρόνου αυτού. Για τα στοιχεία χωρίς συμβατικά καθοριζόμενο χρόνο χρήσης, οι αποσβέσεις διενεργούνται με βάση την εκτιμώμενη ωφέλιμη οικονομική ζωή τους.

β) Τα άυλα στοιχεία με απεριόριστη ωφέλιμη οικονομική ζωή, ή με ωφέλιμη οικονομική ζωή που δεν μπορεί να προσδιοριστεί αξιόπιστα, επιμετρώνται στο κόστος κτήσης μείον αποσβέσεις με συντελεστή απόσβεσης 10%, και μείον ζημίες απομείωσης όταν κρίνεται ότι αυτές (ζημίες απομείωσης) είναι μόνιμου χαρακτήρα.

3.1.3. Χρηματοοικονομικά περιουσιακά στοιχεία

3.1.3.1. Συμμετοχές

Οι συμμετοχές παρακολουθούνται στο κόστος κτήσεως υποκείμενες σε έλεγχο απομειώσεως της αξίας τους όταν υπάρχουν ενδείξεις ή γεγονότα που υποδεικνύουν ότι η λογιστική αξία τους ενδέχεται να μην είναι ανακτήσιμη. Ζημίες απομειώσεωςκαταχωρίζονται όταν η λογιστική αξία των συμμετοχών

GEORGIOS [illegible]AS
PRESIDENT

03/12/18

υπερβαίνει την ανακτήσιμη αξία τους. Ως ανακτήσιμη αξία θεωρείται η αξία χρήσεως που είναι η παρούσα αξία των αναμενόμενων μελλοντικών χρηματοροών από την συμμετοχή, στην επόμενη πενταετία και της υπολειμματικής της αξίας στο τέλος της πενταετίας.

Μερίσματα από τις εν λόγω επενδύσεις αναγνωρίζονται ως έσοδα στα αποτελέσματα, κατά το χρόνο που εγκρίνονται από τα αρμόδια όργανα αυτών.

3.1.3.2. Λοιπά χρηματοοικονομικά περιουσιακά στοιχεία

α) Αρχική καταχώριση

Όλα τα χρηματοοικονομικά περιουσιακά στοιχεία καταχωρίζονται αρχικά στο κόστος κτήσεως, δηλαδή στο κόστος που απαιτήθηκε για την απόκτηση τους. Το κόστος κτήσεως περιλαμβάνει το σύνολο των ταμειακών διαθεσίμων (ή ταμειακών ισοδύναμων) ή την εύλογη αξία άλλου ανταλλάγματος που διατέθηκε για την απόκτηση, πλέον δαπάνες αγοράς.

β) Μεταγενέστερη αποτίμηση

Μεταγενέστερα της αρχικής καταχωρίσεως, τα χρηματοοικονομικά περιουσιακά στοιχεία αποτιμούνται στο κόστος κτήσεώς τους (ονομαστικά ποσά) μείον τυχόν ζημίες απομειώσεως, εκτός από τα έντοκα χρηματοοικονομικά περιουσιακά στοιχεία, τα οποία, όταν τα ποσά, ο χρόνος λήξεώς τους ή το επιτόκιο είναι σημαντικά, αποτιμούνται στο αποσβέσιμο κόστος με τη μέθοδο του πραγματικού επιτοκίου (ή με τη σταθερή μέθοδο).

Ζημία απομειώσεως προκύπτει όταν η λογιστική αξία του στοιχείου είναι μεγαλύτερη από το ποσό που η οντότητα εκτιμά ότι θα ανακτήσει από το στοιχείο αυτό.

Το ποσό που η οντότητα εκτιμά ότι θα ανακτήσει από ένα χρηματοοικονομικό περιουσιακό στοιχείο είναι το μεγαλύτερο από:

- Την παρούσα αξία του ποσού που εκτιμάται ότι θα ληφθεί από το περιουσιακό στοιχείο, υπολογιζόμενη με τη χρήση του αρχικού πραγματικού επιτοκίου.
- Την εύλογη αξία του στοιχείου, μειωμένη με το απαιτούμενο κόστος πωλήσεως.

Οι ζημίες απομειώσεως καταχωρίζονται στην κατάσταση αποτελεσμάτων και αναστρέφονται ως κέρδη σε αυτή, όταν οι συνθήκες που τις προκάλεσαν πάψουν να υφίστανται. Αναστροφή γίνεται μέχρι της αξίας που θα είχε το στοιχείο, εάν δεν είχε καταχωριστεί ζημία απομειώσεως.

Τα δάνεια και οι απαιτήσεις που εκφράζονται σε ξένο νόμισμα αποτιμούνται με την ισοτιμία του ξένου νομίσματος κατά την ημερομηνία του ισολογισμού. Οι σχετικές συναλλαγματικές διαφορές καταχωρίζονται στα αποτελέσματα.

γ) Διαγραφή

Ένα χρηματοοικονομικό περιουσιακό στοιχείο διαγράφεται όταν και μόνον όταν εκπνεύσουν τα συμβατικά δικαιώματα επί των ταμειακών ροών του στοιχείου ή μεταβιβαστούν ουσιαστικά όλοι οι κίνδυνοι και τα οφέλη που προκύπτουν από την κυριότητα του στοιχείου αυτού.

GEORGIOS KARKANIAS
PRESIDENT

03/12/

3.1.4. Φόροι εισοδήματος

3.1.4.1. Τρέχων φόρος

Ο τρέχων φόρος εισοδήματος περιλαμβάνει:

- Τον φόρο εισοδήματος που προκύπτει με βάση τις διατάξεις της εκάστοτε ισχύουσας φορολογικής νομοθεσίας,
- Τον φόρο εισοδήματος και τις προσαυξήσεις που προκύπτουν από τον φορολογικό έλεγχο.

Οι διαφορές του φορολονικού ελέγχου, αναγνωρίζονται στην κατάσταση αποτελεσμάτων της χρήσεως, τη χρήση κατά την οποία βεβαιώνονται από τις φορολογικές αρχές και γίνονται αποδεκτές από την Εταιρεία.

3.1.4.2. Αναβαλλόμενοι φόροι

Αναβαλλόμενοι φόροι προκύπτουν όταν υπάρχουν προσωρινές (αναστρέψιμες) διαφορές μεταξύ λογιστικής αξίας και φορολογικής βάσεως στοιχείων του ισολογισμού.

Η εταιρεία δεν έχει επιλέξει την καταχώριση αναβαλλόμενων φόρων σύμφωνα με την παράγραφο 3 του άρθρου 23 του Ν.4308/2014.

3.1.5. Αποθέματα

α) Αρχική καταχώριση

Τα αποθέματα καταχωρίζονται αρχικά στο κόστος κτήσεως, το οποίο περιλαμβάνει κάθε δαπάνη που απαιτείται για να έλθει κάθε στοιχείο των αποθεμάτων στην παρούσα κατάσταση ή θέση ή επιδιωκόμενη χρήση.

Ειδικότερα το κόστος των ιδιοπαραγομένων αποθεμάτων, συμπεριλαμβανομένων των βιολογικών, περιλαμβάνει το κόστος πρώτων υλών, αναλώσιμων υλικών, εργασίας και άλλο κόστος που σχετίζεται άμεσα με τα εν λόγω στοιχεία. Επιπλέον περιλαμβάνει μια εύλογη αναλογία σταθερών και μεταβλητών εξόδων που σχετίζονται άμεσα με το ιδιοπαραγόμενο στοιχείο, στο βαθμό που τα ποσά αυτά αναφέρονται στην περίοδο παραγωγής. Η εταιρεία δεν επιβαρύνει το κόστος των ιδιοπαραγόμενων αποθεμάτων μακράς περιόδου παραγωγής ή ωριμάνσεως με τόκους εντόκων υποχρεώσεων κατά το μέρος που αναλογούν σε αυτά.

β) Μεταγενέστερη αποτίμηση

Μεταγενέστερα της αρχικής καταχωρίσεως, τα αποθέματααποτιμούνται στην κατ' είδος χαμηλότερη τιμή μεταξύ του κόστους κτήσεως και της καθαρής ρευστοποιήσιμης αξίας τους. Το κόστος κτήσεως των αποθεμάτων προσδιορίζεται με την μέθοδο του μέσου σταθμικού όρου, ή κατά περίπτωση με τη μέθοδο της σειράς εξαντλήσεως (F.I.F.O.). Στην περίπτωση αποτιμήσεως στην καθαρή ρευστοποιήσιμη αξία, η ζημία απομειώσεως καταχωρίζεται ως κόστος πωληθέντων, εκτός αν είναι σημαντική, οπότε ενσωματώνεται στο κονδύλι καπομειώσεις περιουσιακών στοιχείωνι.

3.1.6. Προκαταβολές και λοιπά μη χρηματοοικονομικά περιουσιακά στοιχεία

Οι προκαταβολές δαπανών καταχωρίζονται αρχικά στο κόστος κτήσεως (καταβαλλόμενα ποσά) και αποτιμούνται μεταγενέστερα στο αρχικό κόστος κτήσεως, μείον τα χρησιμοποιηθέντα ποσά βάσει της αρχής του δουλευμένου και τυχόν ζημίες απομειώσεως. Η απομείωση των προκαταβολών δαπανών

GEORGIOS KARKANTAS
PRESIDENT

03/12/18

αναφέρεται στην περίπτωση στην οποία ο λήπτης του σχετικού ποσού δεν είναι σε θέση ούτε να εκπληρώσει την δέσμευση που ανέλαβε ούτε να επιστρέψει το υπόλοιπο του ποσού.

Τα λοιπά μη χρηματοοικονομικά περιουσιακά στοιχεία καταχωρίζονται αρχικά στο κόστος κτήσεως και αποτιμούνται μεταγενέστερα στη χαμηλότερη αξία μεταξύ κόστους κτήσεως και ανακτήσιμης αξίας, δηλαδή του ποσού που αναμένεται να ληφθεί.

Οι εμπορικές απαιτήσεις και οι λοιπές απαιτήσεις επιμετρώνται στο κόστος κτήσης μείον τις εκτιμώμενες ζημίες απομείωσης.

3.1.7. Χρηματοοικονομικές υποχρεώσεις

α) Αρχική καταχώριση και μεταγενέστερη αποτίμηση

Οι χρηματοοικονομικές υποχρεώσεις, τόσο κατά την αρχική καταχώριση, όσο και μεταγενέστερα,αποτιμούνται στα ονομαστικά ποσά τους, εκτός από τις μακροπρόθεσμης λήξεως, οι οποίες αποτιμούνται στο αποσβέσιμο κόστος με τη μέθοδο του πραγματικού επιτοκίου (ή με τη σταθερή μέθοδο). Οι χρηματοοικονομικές υποχρεώσεις που εκφράζονται σε ξένο νόμισμα αποτιμούνται με την ισοτιμία του ξένου νομίσματος κατά την ημερομηνία του ισολογισμού. Οι σχετικές συναλλαγματικές διαφορές καταχωρίζονται στα αποτελέσματα.

β) Διαγραφή

Μια χρηματοοικονομική υποχρέωση διαγράφεται όταν και μόνον όταν η συμβατική δέσμευση εκπληρώνεται, ακυρώνεται ή εκπνέει, δηλαδή όταν η συμβατική δέσμευση που την δημιούργησε δεν υφίσταται πλέον.

3.1.8. Μη χρηματοοικονομικές υποχρεώσεις

α) Αρχική καταχώριση και μεταγενέστερη αποτίμηση

Οι μη χρηματοοικονομικές υποχρεώσεις καταχωρίζονται αρχικά και αποτιμούνται μεταγενέστερα στο ονομαστικό ποσό που αναμένεται να απαιτηθεί για το διακανονισμό τους. Διαφορές που προκύπτουν είτε κατά την επανεκτίμησή είτε κατά το διακανονισμό των μη χρηματοοικονομικών υποχρεώσεων καταχωρίζονται ως κέρδη ή ζημίες της περιόδου στην οποία προκύπτουν.

β) Διαγραφή

Μια μη χρηματοοικονομική υποχρέωση διαγράφεται όταν και μόνον όταν η συμβατική δέσμευση εκπληρώνεται, ακυρώνεται ή εκπνέει, δηλαδή όταν η συμβατική δέσμευση που την δημιούργησε δεν υφίσταται πλέον.

3.1.9. Προβλέψεις

Οι προβλέψεις καταχωρίζονται αρχικά και αποτιμούνται μεταγενέστερα στο ονομαστικό ποσό που αναμένεται να απαιτηθεί για το διακανονισμό τους, εκτός αν η αποτίμηση στην παρούσα αξία του ποσού που αναμένεται να απαιτηθεί για το διακανονισμό τους έχει σημαντική επίδραση στα ποσά των χρηματοοικονομικών καταστάσεων.

Ειδικότερα, οι ενδεχόμενες υποχρεώσεις για παροχές σε εργαζομένους μετά την έξοδο από την υπηρεσία, που προκύπτουν από την εργατική νομοθεσία (Ν. 2112/1920), δεν αναγνωρίζονται στις χρηματοοικονομικές καταστάσεις της 31/12, αλλά καταχωρούνται όταν καταστούν οριστικές.

GEORGIOS KARKANIAS
PRESIDENT

03/12/18

3.1.10. Κρατικές επιχορηγήσεις

Οι κρατικές επιχορηγήσεις που αφορούν περιουσιακά στοιχεία αναγνωρίζονται αρχικά ως υποχρεώσεις στην περίοδο που εισπράττονται ή στην περίοδο που καθίσταται οριστική η έγκρισή τους και υπάρχει βεβαιότητα ότι θα εισπραχθούν. Οι κρατικές επιχορηγήσεις αναγνωρίζονται με τα ποσά που εισπράπονται ή εγκρίνονται οριστικά. Μεταγενέστερα της αρχικής αναγνώρισης, οι κρατικές επιχορηγήσεις αποσβένονται με τη μεταφορά τους στα αποτελέσματα ως έσοδα, στην ίδια περίοδο και με τρόπο αντίστοιχο της μεταφοράς στα αποτελέσματα της λογιστικής αξίας του στοιχείου που επιχορηγήθηκε. Οι κρατικές επιχορηγήσεις που αφορούν έξοδα αναγνωρίζονται αρχικά ως υποχρεώσεις στην περίοδο που εισπράττονται ή στην περίοδο που καθίσταται οριστική η έγκρισή τους και υπάρχει βεβαιότητα ότι θα εισπραχθούν. Οι κρατικές επιχορηγήσεις που αφορούν έξοδα μεταφέρονται στα αποτελέσματα ως έσοδα στην περίοδο στην οποία τα επιχορηγηθέντα έξοδα βαρύνουν τα αποτελέσματα.

3.1.11. Έσοδα και έξοδα

Η εταιρεία καταχωρίζει τα έσοδα και τα έξοδα, όταν αυτά καθίστανται δουλευμένα.

Ειδικότερα:

- Τα έσοδα από πώληση αγαθών καταχωρίζονται εντος της περιόδου στην οποία καθίστανται δουλευμένα και εφόσον πληρούνται όλες οι παρακάτω προϋποθέσεις:
  - ✓ Μεταβιβάζονται στον αγοραστή οι ουσιαστικοί κίνδυνοι και τα οφέλη που συνδέονται με την κυριότητά τους.
  - ✓ Τα αγαθά γίνονται αποδεκτά από τον αγοραστή.
  - ✓ Το οικονομικά οφέλη απο τη συναλλαγή μπορούν να αποτιμηθούν αξιόπιστα και θεωρείται σφόδρα πιθανή η εισροή τους στην οντότητα.
- Τα έσοδα από παροχή υπηρεσιών και κατασκευαστικά συμβόλαια καταχωρίζονται με τη μέθοδο του ποσοστού ολοκλήρωσεως και εφόσον θεωρείται σφόδρα πιθανή η εισροή του οικονομικού οφέλους της συναλλαγής. Εναλλακτικά και όταν δεν υπάρχει ουσιώδης επίπτωση στις χρηματοοικονομικές καταστάσεις, τα έσοδα από παροχή υπηρεσιών επιμετρώνται με την μέθοδο της ολοκληρωμένης σύμβασης.
- Τα έσοδα που προέρχονται από τη χρήση περιουσιακών στοιχείων της οντότητας από τρίτους καταχωρίζονται ως εξής:
  - ✓ Τα έσοδα από τόκους λογίζονται βάσει της αρχής του δουλευμένου.
  - ✓ Τα μερίσματα ή παρόμοιας φύσεως εισόδημα από τη συμμετοχή στην καθαρή θέση άλλων οντοτήτων όταν εγκρίνονται από το αρμόδιο όργανο που αποφασίζει τη διανομή τους.
  - ✓ Τα δικαιώματα βάσει των σχετικών συμβατικών όρων.
- Τα έξοδα αναγνωρίζονται στην κατάσταση αποτελεσμάτων βάσει της αρχής του δουλευμένου.

3.1.12. Συναλλαγές σε ξένο νόμισμα

Οι συναλλαγές σε ξένο νόμισμα μετατρέπονται κατά την αρχική αναγνώριση στο νόμισμα στο οποίο καταρτίζονται οι χρηματοοικονομικές καταστάσεις της οντότητας με την ισχύουσα συναλλαγματική ισοτιμία κατά τη συναλλαγή. Στο τέλος κάθε περιόδου αναφοράς: (α) τα νομισματικά στοιχεία μετατρέπονται με την ισοτιμία κλεισίματος της ημερομηνίας του ισολογισμού, (β) τα μη νομισματικά στοιχεία που εκφράζονται σε ξένο νόμισμα και επιμετρώνται στο κόστος κτήσεως, μετατρέπονται με

GEORGIOS KARKANIAS
PRESIDENT

03/12/19

την ισοτιμία της αρχικής αναγνώρισης. Οι συναλλαγματικές διαφορές που προκύπτουν από το διακανονισμό νομισματικών στοιχείων ή από τη μετατροπή τους με ισοτιμία διαφορετική από την ισοτιμία μετατροπής κατά την αρχική αναγνώριση ή κατά τη σύνταξη προγενέστερων χρηματοοικονομικών καταστάσεων, αναγνωρίζονται στα αποτελέσματα της περιόδου που προκύπτουν.

3.1.13. Στοιχεία της καθαρής θέσεως

Τα κονδύλια της καθαρής θέσεως καταχωρίζονται αρχικά και αποτιμούνται μεταγενέστερα στα ονομαστικά ποσά, που έχουν ληφθεί ή καταβληθεί.

3.1.14. Ενδεχόμενα περιουσιακά στοιχεία και ενδεχόμενες υποχρεώσεις

Τα στοιχεία αυτά αφορούν ενδεχόμενα δικαιώματα και δεσμεύσεις αντίστοιχα, τα οποία προκύπτουν από γεγονότα του παρελθόντος και η ύπαρξή τους θα επιβεβαιωθεί μόνο από το αν συμβούν ή δεν συμβούν ένα ή περισσότερα αβέβαια μελλοντικά γεγονότα, τα οποία δεν είναι πλήρως υπό τον έλεγχο της Εταιρείας. Τα στοιχεία αυτά γνωστοποιούνται στις σημειώσεις των χρηματοοικονομικών καταστάσεων.

3.1.15. Γεγονότα μετά την ημερομηνία ισολογισμού

Οι αξίες των περιουσιακών στοιχείων και των υποχρεώσεων κατά την ημερομηνία του ισολογισμού, προσαρμόζονται, εάν υπάρχει αντικειμενική ένδειξη ότι διορθωτικά γεγονότα μετά την ημερομηνία αυτή επιβάλλουν προσαρμογές της αξίας τους. Οι προσαρμογές αυτές γίνονται για τέτοια γεγονότα, ως την ημερομηνία εγκρίσεως των οικονομικών καταστάσεων από το Διοικητικό Συμβούλιο. Τα μη διορθωτικά, μετά την ημερομηνία του ισολογισμού γεγονότα, γνωστοποιούνται εφόσον είναι σημαντικά, στις σημειώσεις των χρηματοοικονομικών καταστάσεων.

3.1.16. Σημαντικές λογιστικές εκτιμήσεις και παραδοχές

Οι εκτιμήσεις και οι παραδοχές αξιολογούνται διαρκώς και βασίζονται στην ιστορική εμπειρία και σε άλλους παράγοντες, συμπεριλαμβανομένων αναμενόμενων μελλοντικών γεγονότων που, υπό τις παρούσες συνθήκες, αναμένεται να πραγματοποιηθούν.

3.2. Μεταβολή λογιστικών πολιτικών, μεταβολές λογιστικών εκτιμήσεων και διόρθωση σφαλμάτων προηγούμενων περιόδων

3.2.1. Μεταβολή λογιστικών πολιτικών

Οι μεταβολές λογιστικών πολιτικών, καταχωρίζονται με αναδρομική επαναδιατύπωση των χρηματοοικονομικών καταστάσεων όλων των περιόδων που δημοσιοποιούνται μαζί με τις καταστάσεις της τρέχουσας περιόδου, ώστε τα παρουσιαζόμενα κονδύλια να είναι συγκρίσιμα.

Στην παρούσα περίοδο δεν προέκυψε ανάγκη τέτοιας μεταβολής.

3.2.2 Μεταβολές λογιστικών εκτιμήσεων

Οι μεταβολές των λογιστικών εκτιμήσεων καταχωρίζονται στην περίοδο, στην οποία διαπιστώνεται ότι προκύπτουν και επηρεάζουν αυτή την περίοδο και μελλοντικές περιόδους, κατά περίπτωση. Οι μεταβολές αυτές δεν αναγνωρίζονται αναδρομικά.

GEORGIOS KARKANTAS
PRESIDENT

03/12/18

3.2.3. Διόρθωση σφαλμάτων προηγούμενων περιόδων

Οι διορθώσεις σφαλμάτων καταχωρίζονται με την αναδρομική διόρθωση των χρηματοοικονομικών καταστάσεων όλων των περιόδων που δημοσιοποιούνται μαζί με τις καταστάσεις της τρέχουσας περιόδου.

Στην παρούσα περίοδο δεν εντοπίστηκε σφάλμα προηγούμενης περιόδου.

4. Παρεκκλίσεις από τις διατάξεις του νόμου προκειμένου να επιτευχθεί εύλογη παρουσίαση των χρηματοοικονομικών καταστάσεων (παρ. 6 άρθρου 29)

Όταν, σε εξαιρετικές περιπτώσεις, η εταιρεία παρεκκλίνει από την εφαρμογή μιας διατάξεως του νόμου για να εκπληρώσει την υποχρέωση της εύλογης παρουσιάσεως των χρηματοοικονομικών καταστάσεων, γνωστοποιεί και αιτιολογεί επαρκώς την παρέκκλιση αυτή.

Στην παρούσα περίοδο δεν προέκυψε ανάγκη τέτοιας παρεκκλίσεως.

5. Σχέσεις ενός περιουσιακού στοιχείου ή μιας υποχρεώσεως με περισσότερα από ένα κονδύλια του ισολογισμού (παρ. 7 άρθρου 29)

Δεν υπάρχουν περιουσιακά στοιχεία ή υποχρεώσεις που σχετίζεται με περισσότερα από ένα κονδύλια του ισολογισμού.

6. Αναλύσεις κονδυλίων χρηματοοικονομικών καταστάσεων

6.1. Πληροφορίες σχετικά με ενσώματα, άυλα και βιολογικά πάγια περιουσιακά στοιχεία (παρ. 8 άρθρου 29)

Στους πίνακες που ακολουθούν στις επόμενες παραγράφους παρουσιάζονται οι πληροφορίες που αφορούν την κίνηση και τη συμφωνία των λογαριασμών των ενσωμάτων παγίων.

GEORGIOS KARKANIAS
PRESIDENT

03/12/18

6.1.1.Ιδιοχρησιμοποιούμενα ενσώματα πάγια περιουσιακά στοιχεία

Πίνακας μεταβολών ενσώματων πάγιων στοιχείων ιδιοχρησιμοποιούμενων	Γήπεδα	Κτίρια	Μηχανολογικός εξοπλισμός	Μεταφορικά μέσα	Έπιπλα & λοιπός εξοπλισμός
Αξία κτήσεως					
Υπόλοιπο 1.1.2015	299.809	1.264.652	385.045	226.875	283.857
Προσθήκες περιόδου			8.530	3.791	23.278
Υπόλοιπο 31.12.2015	299.809	1.264.652	393.575	230.666	307.135
Σωρευμένες αποσβέσεις και απομειώσεις					
Υπόλοιπο 1.1.2015		1.262.009	382.822	156.898	259.020
Αποσβέσεις περιόδου	-	364	6.822	13.948	19.089
Υπόλοιπο 31.12.2015	-	1.262.264	389.643	170.846	278.109
Καθαρή λογιστική αξία 31.12.2015	**299.809**	**2.389**	**3.932**	**59.820**	**29.026**
Αξία κτήσεως					
Υπόλοιπο 1.1.2016	299.809	1.264.652	393.575	230.666	307.135
Προσθήκες περιόδου					2.697
Υπόλοιπο 31.12.2016	299.809	1.264.652	393.575	230.666	309.832
Σωρευμένες αποσβέσεις και απομειώσεις					
Υπόλοιπο 1.1.2016	-	1.262.264	389.643	170.846	278.109
Αποσβέσεις περιόδου		254	494	13.057	11.222
Υπόλοιπο 31.12.2016	-	1.262.518	390.137	184.143	289.331
Καθαρή λογιστική αξία 31.12.2016	299.809	2.134	3.438	46.523	20.502

6.1.2. Άυλα πάγια περιουσιακά στοιχεία

Πίνακας μεταβολών άυλων πάγιων στοιχείων	Λοιπά άυλα στοιχεία
Αξία κτήσεως	
Υπόλοιπο 1.1.2015	317.375
Προσθήκες περιόδου	1.672
Υπόλοιπο 31.12.2015	319.047
Σωρευμένες αποσβέσεις και απομειώσεις	
Υπόλοιπο 1.1.2015	288.375
Αποσβέσεις περιόδου	16.172
Υπόλοιπο 31.12.2015	304.547
Καθαρή λογιστική αξία 31.12.2015	14.500
Αξία κτήσεως	
Υπόλοιπο 1.1.2016	319.047
Προσθήκες περιόδου	1.672
Υπόλοιπο 31.12.2016	320.719
Σωρευμένες αποσβέσεις και απομειώσεις	
Υπόλοιπο 1.1.2016	304.547
Αποσβέσεις περιόδου	16.172
Υπόλοιπο 31.12.2016	320.719
Καθαρή λογιστική αξία 31.12.2016	0

GEORGIOS KARKANIAS
PRESIDENT

03/12/18

6.2 Προβλέψεις

6.2.1.Προβλέψεις για παροχές σε εργαζομένους

Οι ενδεχόμενες υποχρεώσεις για παροχές σε εργαζομένους μετά την έξοδο από την υπηρεσία, που προκύπτουν από την εργατική νομοθεσία (Ν. 2112/1920), δεν αναγνωρίζονται στις χρηματοοικονομικές καταστάσεις της 31/12, αλλά καταχωρούνται όταν καταστούν οριστικές.

6.3. Υποχρεώσεις

6.3.1 Μακροπρόθεσμες Υποχρεώσεις

6.3.1.1 Δάνεια

α) Εξασφαλίσεις δανείων(παρ. 13 άρθρου 29)

Δεν υφίστανται εμπράγματες εξασφαλίσεις επί ιδιοχρησιμοποιούμενων ή επενδυτικών ακινήτων.

β) Χρόνος λήξεως δανειακών υποχρεώσεων (παρ. 14 άρθρου 29)

Υπόλοιπο λήξεως	Τραπεζικά δάνεια	Σύνολο
Βραχυπρόθεσμο τμήμα:		
Έως 1 έτος	594.479	594.479
Σύνολο βραχυπρόθεσμου τμήματος	594.479	594.479
Μακροπρόθεσμο τμήμα:		
1 έως 2 έτη	-	
2 έως 5 έτη	-	
Άνω των 5 ετών	-	
Σύνολο μακροπρόθεσμου τμήματος	-	-
Γενικό Σύνολο	594.479	594.479

6.3.2 Βραχυπρόθεσμες Υποχρεώσεις

6.3.2.1 Εμπορικές υποχρεώσεις

Οι εμπορικές υποχρεώσεις αναλύονται στον κατωτέρω πίνακα:

Εμπορικές υποχρεώσεις	31/12/2016	31/12/2015
Υποχρεώσεις σε προμηθευτές	484.597	604.937
Προκαταβολές πελατών	81.506	93.354
Επιταγές πληρωτέες	114.844	443.725
Σύνολο	680.946	1.142.017

6.3.2.2 Λοιπές υποχρεώσεις

Οι λοιπές υποχρεώσεις αναλύονται στον κατωτέρω πίνακα:

GEORGIOS KARKANTAS
PRESIDENT

03/12/18

Λοιπές υποχρεώσεις	31/12/2016	31/12/2015
Απαιδοχές προσωπικού πληρωτέες	17.788	22.148
Βραχυπρόθεσμες υποχρεώσεις προς εταίρους	223.190	173.190
Μερίσματα πληρωτέα		4.320
Λοιπές Υποχρεώσεις	7.013	12.984
Σύνολο	247.992	212.642

6.4.Έσοδα και έξοδα σημαντικού ποσού ή ιδιαίτερης συχνότητας ή σημασίας (παρ. 17 άρθρου 29)

Ακολουθεί ανάλυση αυτών των εσόδων και εξόδων στους παρακάτω πίνακες:

Κύκλος εργασιών	31/12/2016	31/12/2015
Κατηγορίες δραστηριότητας		
Βιομηχανική δραστηριότητα	2.658.922	4.405.564
Σύνολο	2.658.922	4.405.564

Ο κύκλος εργασιών των κοινοπραξιών που συμμετέχει η εταιρεία με βάση το ποσοστό συμμετοχής της είναι :

Ακαθάριστα έσοδα από συμμετοχή σε κοινοπραξίες	Έσοδα κοινοπραξίας	Ποσοστό συμμετοχής %	Έσοδα εταιρείας
Κ/Ξ ΚΑΡΚΑΝΙΑΣ ΤΕΧΝΟΛΟΓΙΑ ΠΕΡΙΒΑΛΛΟΝΤΟΣ ΑΕ- ΔΑΛΥΝΑΣ Α.Ε	0,00	50,00	0,00
Κ/Ξ ΚΑΡΚΑΝΙΑΣ ΤΕΧΝΟΛΟΓΙΑ ΠΕΡΙΒΑΛΛΟΝΤΟΣ Α.Ε-ΤΣΙΟΜΗΣ ΛΑΜΠΡΟΣ ΑΠΟΣΤΟΛΟΥ	7.016,40	95,30	6.686,63
Κ/Ξ ΤΕΜΚΑΤ ΟΙΚΟΔΟΜΙΚΗ ΑΕ-ΚΑΡΚΑΝΙΑΣ ΑΞ	5,00	30,00	1,50
Κ/Ξ ΚΑΡΚΑΝΙΑΣ ΤΕΧΝΟΛΟΓΙΑ ΠΕΡΙΒΑΛΛΟΝΤΙΟΣ Α.Ε - ΑΡΧΩΝ ΑΤΕ	706.770,16	50,00	353.385,08
KARKANIAS S.A MONTENEGRO	543.606,00	100,00	543.606,00
	Κύκλος εργασιών από κ/ξίες		**903.679,21**
	Κύκλος εργασιών εταιρείας		**2.658.922,11**
	Σύνολο Κύκλου εργασιών		**3.562.601,32**

Κόστος πωλήσεων	31/12/2016	31/12/2015
Αμοιβές και έξοδα προσωπικού	384.598	391.720
Λοιπές αμοιβές και έξοδα τρίτων	972.970	1.487.767
Παροχές τρίτων	95.135	87.389
Έξοδα από φόρους και τέλη	7.999	7.978
Λοιπά έξοδα	152.059	108.354
Έξοδα αποσβέσεων	23.335	31.688
Κόστος πωληθέντων εμπορευμάτων	1.066.513	1.663.755
Σύνολο	2.702.609	3.778.682

GEORGIOS KARKANIAS
PRESIDENT

03/12/18

Έξοδα διοίκησης	31/12/2016	31/12/2015
Αμοιβές και έξοδα προσωπικού	75.778	77.181
Λοιπές αμοιβές και έξοδα τρίτων	26.574	13.184
Παροχές τρίτων	22.524	31.219
Έξοδα από φόρους και τέλη	13.443	11.163
Διάφορα έξοδα	91.867	65.108
Αποσβέσεις	18.104	24.597
Σύνολο	248.290	222.452

Λοιπά συνήθη έσοδα	31/12/2016	31/12/2015
Επιχορηγήσεις	13.385	72.540
Ενοίκια	47.238	47.358
Λοιπά έσοδα	30	129
Σύνολο	60.653	120.026

Λοιπά έξοδα και ζημιές	31/12/2016	31/12/2015
Έκτακτα και ανόργανα έξοδα	1.640	1.774
Έκτακτες ζημιές	1.526	-
Έξοδα προηγουμένων χρήσεων	982	6.666
Προβλέψεις για επισφαλείς απαιτήσεις	-	18.707
Σύνολο	4.147	27.147

Λοιπά έσοδα και κέρδη	31/12/2016	31/12/2015
Έκτακτα και ανόργανα εσοδα	2.349	1
Έσοδα προηγουμένων χρήσεων	-	420.882
Σύνολο	2.349	420.883

6.5. Τόκοι που ενσωματώθηκαν στην αξία περιουσιακών στοιχείων στην περίοδο (παρ. 18 άρθρου 29)

Στη διάρκεια της περιόδου δεν ενσωματώθηκαν τόκοι στην αξία κατασκευαζόμενωνπεριουσιακών στοιχείων.

6.6.Πληροφορίες για το προσωπικό και τις σχετικές δαπάνες της περιόδου (παρ. 23 άρθρου 29)

Ο μέσος όρος προσωπικού της εταιρείας κατά την περίοδο 2016 εμφανίζεται κατωτέρω:

	31/12/2016	31/12/2015
Διοικητικό προσωπικό	8	9
Εργατοτεχνικό προσωπικό	12	14
Σύνολο	20	23

Το συνολικό κόστος του προσωπικού αναλύεται στον παρακάτω πίνακα:

	31/12/2016	31/12/2015
Μισθοί και ημερομίσθια	353.516	346.601
Κοινωνικές επιβαρύνσεις	106.660	122.035
Παρεπόμενες παροχές	200	266
Σύνολο	460.376	468.902

GEORGIOS KARKANIAS
PRESIDENT

03/12/18

6.7. Προκαταβολές και πιστώσεις σε μέλη διοικητικών, διαχειριστικών και εποπτικών οργάνων (παρ. 25 άρθρου 29)

Η εταιρεία δεν έχει παράσχει προκαταβολές και πιστώσεις σε μέλη του διοικητικού της Συμβουλίου.

6.8. Χρήση της επιλογής της παραγράφου 7 ή της παραγράφου 8 του άρθρου 16 του νόμου

Η Εταιρεία δεν ανήκει στην κατηγορία των πολύ μικρών οντοτήτων

6.9. Χρηματοοικονομικές δεσμεύσεις, εγγυήσεις, και ενδεχόμενες υποχρεώσεις που δεν εμφανίζονται στον ισολογισμό (παρ. 16 άρθρου 29)

α) Χρηματοοικονομικές δεσμεύσεις

Η Εταιρεία δεν έχει συνάψει μη ακυρώσιμες συμβάσεις λειτουργικών μισθώσεων που αφορούν την ενοικίαση ακινήτων.

β) Εγγυήσεις

Η Εταιρεία έχει χορηγήσει εγγυητικές επιστολές προς διάφορους τρίτους, ανάλυση των οποίων παρατίθεται στον ακόλουθο πίνακα:

	31/12/2016	31/12/2015
Καλής εκτέλεσης έργου	156.176	789.642
Λοιπές εγγυήσεις σε τρίτους		
Σύνολο	156.176	789.642

γ) Ενδεχόμενες υποχρεώσεις

Οι φορολογικές υποχρεώσεις της εταιρίας δεν έχουν εξεταστεί από τις φορολογικές αρχές για τις χρήσεις από 2009 έως 2016. Ως εκ τούτου τα φορολογικά αποτελέσματα των χρήσεων αυτών δεν έχουν καταστεί οριστικά. Η εταιρία δεν έχει προβεί σε εκτίμηση των πρόσθετων φόρων και των προσαυξήσεων που πιθανόν να καταλογιστούν σε μελλοντικό φορολογικό έλεγχο και δεν έχει σχηματίσει σχετική πρόβλεψη για αυτή την ενδεχόμενη υποχρέωση. Για τις χρήσεις 2010 έως 2014 έχει πραγματοποιηθεί μερικός έλεγχος (10.08.2017), στα αντικείμενα της φορολογίας εισοδήματος και ΦΠΑ, χωρίς να προκύψουν σημαντικές πρόσθετες διαφορές για την εταιρεία.

Λάρισα, 27 Ιουνίου 2017

Ο ΠΡΟΕΔΡΟΣ & ΔΙΕΥΘΥΝΩΝ ΣΥΜΒΟΥΛΟΣ	Η ΔΙΕΥΘΥΝΟΥΣΑ ΣΥΜΒΟΥΛΟΣ	Η ΛΟΓΙΣΤΡΙΑ
ΓΕΩΡΓΙΟΣΑΠ.ΚΑΡΚΑΝΙΑΣ	ΒΑΣΙΛΙΚΗ ΚΑΡΚΑΝΙΑ	ΓΕΡΟΠΑΝΝΗ ΕΙΡΗΝΗ
Α.Δ.Τ. ΑΚ 407117	ΑΔΤ ΑΚ 407175	Α.Μ. ΑΔΕΙΑΣ Ο.Ε. 0107975/Α' ΤΑΞΗΣ

GEORGIOS KARKANIAS
PRESIDENT

03/12/18

ΣΤΟΙΧΕΙΑ & ΠΛΗΡΟΦΟΡΙΕΣ ΧΡΗΣΕΩΣ ΑΠΟ 1Η ΙΑΝΟΥΑΡΙΟΥ ΕΩΣ 31Η ΔΕΚΕΜΒΡΙΟΥ 2016

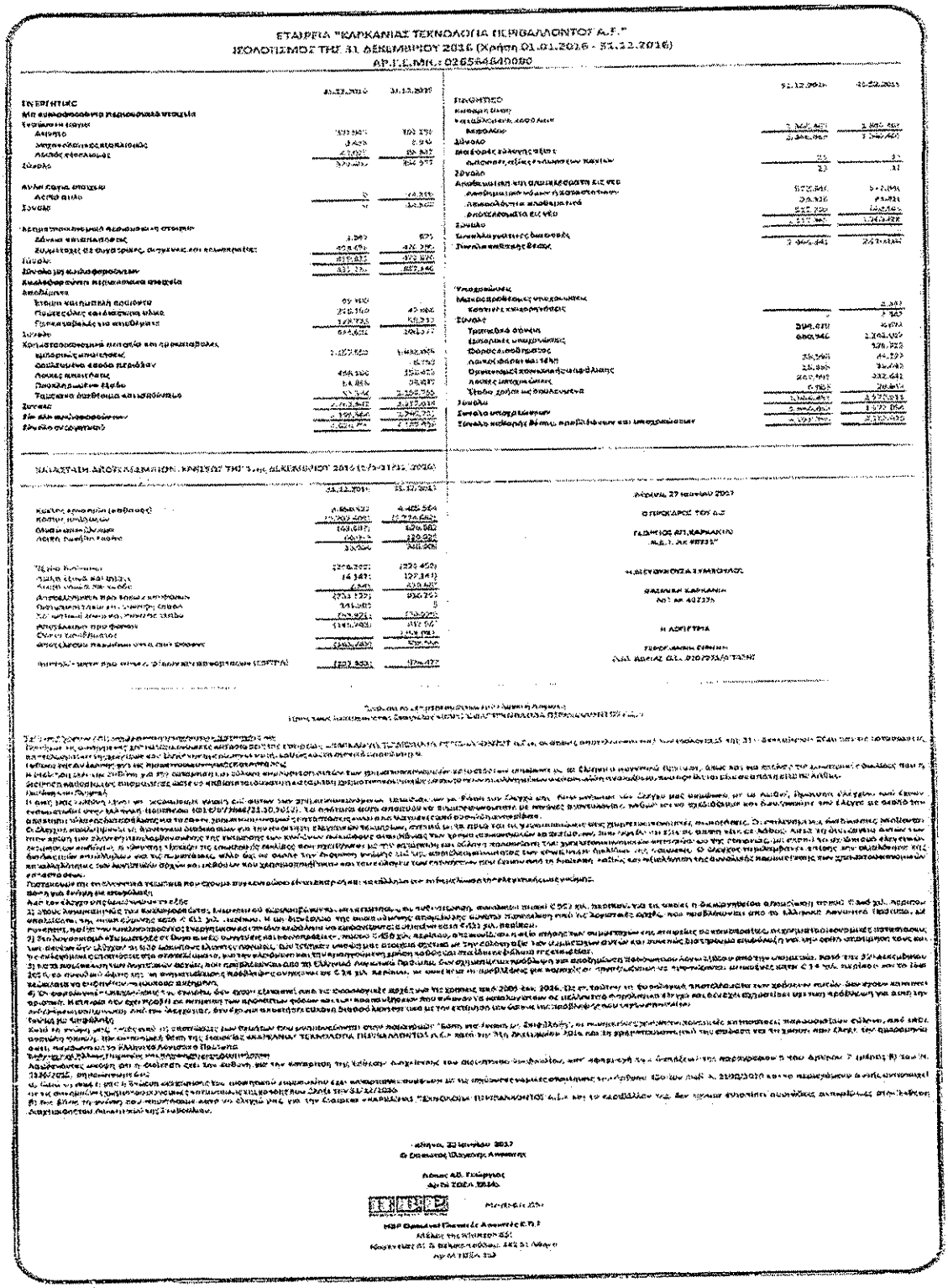

ΕΤΑΙΡΕΙΑ "ΚΑΡΚΑΝΙΑΣ ΤΕΧΝΟΛΟΓΙΑ ΠΕΡΙΒΑΛΛΟΝΤΟΣ Α.Ε."
ΙΣΟΛΟΓΙΣΜΟΣ ΤΗΣ 31 ΔΕΚΕΜΒΡΙΟΥ 2016 (Χρήση 01.01.2016 - 31.12.2016)
ΑΡ.Γ.Ε.ΜΗ.: 026544610000

	31.12.2016	31.12.2015
ΕΝΕΡΓΗΤΙΚΟ		
Μη κυκλοφορούντα περιουσιακά στοιχεία		
Ενσώματα πάγια		
Δικαίωμα	193.957	193.570
Μηχανολογικός εξοπλισμός	8.459	8.940
Λοιπός εξοπλισμός	4.007	29.367
Σύνολο	206.423	231.877
Άυλα πάγια στοιχεία		
Λοιπά άυλα	0	14.335
Σύνολο	0	14.335
Αναβαλλόμενες φορολογικές απαιτήσεις		
Δάνεια εταιρειών	1.593	671
Συμμετοχές σε συγγενείς, συγκυρίες και κοινοπραξίες	408.454	408.296
Σύνολο	410.047	408.966
Σύνολο μη κυκλοφορούντων	616.470	655.178
Κυκλοφορούν περιουσιακά στοιχεία		
Αποθέματα		
Έτοιμα και εμπορεύματα προϊόντα	0	0
Πρώτες ύλες και υλικά	255.350	49.000
Προκαταβολές για αποθέματα	149.735	151.233
Σύνολο	405.085	200.233
Χρηματοοικονομικά περιουσιακά και εμπορικές		
εμπορικές απαιτήσεις	1.457.820	1.482.906
Ασωματώτατα έσοδα περιόδων		8.750
Λοιπές απαιτήσεις	458.100	350.470
Προκαταβολικοί έξοδα	14.886	28.830
Ταμειακά διαθέσιμα και ισοδύναμα	33.344	2.366.566
Σύνολο	2.014.348	4.417.016
Σύνολο ενεργητικού	3.035.904	5.272.427
Σύνολο ενεργητικού	3.035.904	5.272.427

	31.12.2016	31.12.2015
ΠΑΘΗΤΙΚΟ		
Καθαρή θέση		
Καταβλημένο κοινό μετοχικό κεφάλαιο	3.300.401	3.300.401
Σύνολο	3.300.401	3.300.401
Δίκαιο		
Διαφορές αλλαγής αξίας		
Διαφορές αξίας επανεκτίμησης πάγιων	33	33
Σύνολο	33	33
Αποθεματικά και αποτελέσματα εις νέο		
Αναπόσβεστο υπόλοιπο εξόδου εγκατάστασης	572.836	572.836
Αποσβέσεις	28.936	14.468
Αναβαλλόμενα αποθεματικά	557.900	558.368
Αποτελέσματα εις νέο	2.177.961	1.969.498
Σύνολο	2.707.861	2.971.171
Συνολικά μετοχικές διανομές		
Σύνολο καθαρής θέσης	3.008.641	2.971.171
Υποχρεώσεις		
Μακροπρόθεσμες υποχρεώσεις		2.000
Κοστολογικές υποχρεώσεις		2.000
Σύνολο	2.000	4.000
Τραπεζικά δάνεια	298.678	40.000
Εμπορικές υποχρεώσεις	6.808.346	2.062.169
Φορολογικές υποχρεώσεις		126.228
Λοιποί φόροι και τέλη	38.598	44.220
Ασφαλιστικοί οργανισμοί	28.886	24.042
Οργανισμοί κοινωνικής ασφάλισης	260.747	332.641
Λοιπές υποχρεώσεις	6.783	26.801
Έσοδα χρήσεως εισπρακτέα	1.000.801	1.477.913
Σύνολο	2.000.000	1.977.956
Σύνολο υποχρεώσεων	4.027.787	3.310.956
Σύνολο παθητικού (Ίδια κεφάλαια και υποχρεώσεις)	7.035.904	6.272.427

ΚΑΤΑΣΤΑΣΗ ΔΙΑΠΟΙΚΗΣΕΩΝ ΚΑΘΑΡΟΥ ΤΗΣ 1ης ΙΑΝΟΥΑΡΙΟΥ 2016 ΕΩΣ 31ης ΔΕΚΕΜΒΡΙΟΥ 2016

	31.12.2016	31.12.2015
Καθαρός κύκλος εργασιών (πωλήσεις)	4.650.930	4.405.564
Κόστος πωλήσεων	(4.260.400)	(3.774.660)
Μικτό κέρδος	390.530	630.904
Λοιπά έσοδα εκμετάλλευσης	0	0
Λοιπά έξοδα εκμετάλλευσης	(90.000)	(189.000)
Λοιπά κέρδη	300.530	441.904
Έξοδα διοίκησης	(230.000)	(230.450)
Έξοδα διάθεσης	(4.140)	(27.141)
Λοιπά έξοδα και ζημίες	(4.000)	(10.000)
Αποσβέσεις πάγιων και άυλων στοιχείων	(253.125)	(253.125)
Χρηματοοικονομικά έσοδα και συναφή έσοδα	345.000	0
Χρηματοοικονομικά έξοδα και συναφή έξοδα	(59.925)	(59.925)
Αποτελέσματα προ φόρων	134.340	161.163
Φόρος εισοδήματος	(34.000)	(34.000)
Αποτελέσματα μετά από φόρους	100.340	127.163
Λοιπά συνολικά έσοδα μετά από φόρους	(92.000)	(92.000)
Συνολικά συγκεντρωτικά έσοδα μετά από φόρους (ΣΥΝΕΧΕΙΑ)	(191.660)	(164.837)

Αθήνα, 27 Ιανουαρίου 2017

Ο ΠΡΟΕΔΡΟΣ ΤΟΥ Δ.Σ

ΓΕΩΡΓΙΟΣ ΔΗ.ΚΑΡΚΑΝΙΑΣ
Α.Δ.Τ. ΑΚ 499315"

Η ΔΙΕΥΘΥΝΟΥΣΑ ΣΥΜΒΟΥΛΟΣ

ΘΕΟΔΩΡΑ ΚΑΡΚΑΝΙΑ
ΑΜ Σ ΑΚ 402335

Η ΛΟΓΙΣΤΡΙΑ

ΕΛΕΝΗ ΑΘΑΝΑΣ Ο.Ε.Ε.
Α.Μ. ΑΘΑΝΑΣ Ο.Ε.Ε. 0120/ΣΑΛ/Α' ΤΑΞΗΣ

GEORGIOS KARKANIAS
PRESIDENT

03/12/16

Form FIN – 2: Average Annual Construction Turnover

Each Tenderer or member of a JVCA must fill in this form

Annual Turnover Data for the Last 5 Years (Construction only)			
Year	**Amount Currency**	**Exchange Rate**	**EURO Equivalent**
2014	4.008.744,84€		4.008.744,84€
2015	6.364.777,58€		6.364.777,58€
2016	3.562.601,32€		3.562.601,32€
Average Annual Construction Turnover			4.645.374,58€

The information supplied should be the Annual Turnover of the Tenderer or each member of a JVCA in terms of the amounts billed to clients for each year for work in progress or completed, converted to EUROs at the rate of exchange at the end of the period reported.

GEORGIOS KARKANIAS
PRESIDENT

03/12/18

Form FIN – 3: Financial Resources

Specify proposed sources of financing, such as liquid assets, unencumbered real assets, lines of credit, and other financial means, net of current commitments, available to meet the total construction cash flow demands of the subject contract or contracts as indicated in Tender Data, Para 3.2 (Qualifying requirement), Clause 3.2.3.3.

Financial Resources		
No.	**Source of financing**	**Amount (EURO equivalent)**
1	LINE OF GREDIT	2.020.000,00 €
2	LIQUID ASSETS	1.156.755,10 €
3	UNENCUMBERED REAL ASSETS	584.975,90 €
4		

GEORGIOS KARKANIAS
PRESIDENT

03/12/18

To: **KARKANIAS ENVIROMENTAL TECHNOLOGY SA**
Industrial area of Larissa
PO Box 3053, Post Code 41004
Larissa, Greece

Larissa, 06.09.2017

Dear sir/s,

We, the undersigned PIRAEUS BANK S.A. Larissa Business Center, in reply to your relevant written request, dated 06.09.2017, confirm that you are a respectable client of ours and that you carry out your banking transactions with us in a very satisfactory manner. **Furthermore, we would like to inform you that the existing approved credit limit is up to € 2.020.000 (two million twenty thousand euro).**

The above confirmation is given without any liability on the part of our bank and its officers and does not – in any case – assume any kind of undertaking whatsoever on our part, consequently it does not produce any legal effect.

Yours Sincerely,

PIRAEUS BANK S.A.

Konstantia I. Tzerpouli

Apostolos Dim. Kameas

03/12/16

Form FIN - 4: Current Contract Commitments / Works in Progress

Tenderers and each partner to a JVCA should provide information on their current commitments on all contracts that have been awarded, or for which a letter of intent or acceptance has been received, or for contracts approaching completion, but for which an unqualified, full completion certificate has yet to be issued.

No.	Name of Contract	iii. Employer's Contact Address/ tel/Fax	Value of Outstanding Work (Current EURO Equivalent)	Estimated Completion Date	Average Monthly Invoicing Over Last Six Months (EURO/month)
1	WASTE WATER TREATMENT PLANT OF MOLOS SETTLEMENT	MUNICIPALITY OF MOLOS – AG.KONSTANTINOS Ag. Panteleimona 8 str., Kammena Vourla tel: (0030) 22353 50038 fax: (0030) 22350 89085	65.677,68€	11/2017	0,00€
2	LANDFILL EXTENSION OF THE ISLAND OF KOS	MUNICIPALITY OF KOS TECHNICAL SERVICES Skevou Zervou 40str. tel: (0030) 22423 61501 fax: (0030) 22420 26362	1.602.623,08€	2/2018	0,00€
3	DESIGN AND BUILD OF LEACHATE TREATMENT PLANT AT LIVADE LANDFILL IN PODGORICA MONTENEGRO	DEPONIJA D.O.O. Podgorica Montenegro Address: Spanskih Boraca bb, Podgorica Tel. +382 20 625 046 Fax: +382 20 627 280	119.664,00€	10/2017	38.709,75€

GEORGIOS KARKANIAS
PRESIDENT

03/12/18

Form EXP – 1: General Construction Experience

General Construction Experience				
Starting Month Year	Ending Month Year	Years	Contract Identification and Name Name and Address of Employer Brief Description of the Works Executed by the Tenderer	Role of Tenderer
12/2006	04/2014	7 years and 5 months	Contract name: Design, Construction and Operation (for 6 months) of the WWTP of the Municipality of Agia Equivalent population: 9.750 Brief Description of the Works performed by the Bidder: Final design, complete construction of civil works, supply and installation of electromechanical equipment, general infrastructures and auxiliary works, commissioning and trial operation for 6 months of the Waste Water Treatment Plant of the Municipality of Agia Amount of contract: 2.755.992,29€ Name of Employer: DEYA (Public Utility of Water Supply and Sewage) of Agia Address: Calypso Alexoulis 27, 40003, Agia-Greece Tel. +30 24940 24188 Fax 24940 24288 email: info@deya-agias.gr	Joint Venture (Owner of 70%)
06/2010	05/2013	2 years and 11 months	Contract name: Construction of the 4th Phase of Landfill of the City of Larisa Brief Description of the Works performed by the Bidder: Complete construction of 4th phase –cell which included earth works, road works, flood protection works, sealing works, drainage management works, biogas management works of the Sanitary Landfill of the City of Larisa Amount of contract: 3.308.325,86€ Name of Employer: Municipality Management Organisation of Larisa Address: Ionos Dragoumi 1, 41222, Larisa – Greece Tel. +30 2410680200, Fax: +30 2410250372 email:kathar@larissa-dimos.gr	Contractor

GEORGIOS KARKANIAS
PRESIDENT

03/12/18

KARKANIAS ENVIRONMENTAL TECHNOLOGY S.A.

General Construction Experience				
Starting Month Year	Ending Month Year	Years	Contract Identification and Name Name and Address of Employer Brief Description of the Works Executed by the Tenderer	Role of Tenderer
11/2010	10/2012	1 year and 11 months	Contract name: Extension of WWTP of Lamia Total Equivalent population: 93.250 Extension Equivalent population: 31.083 Brief Description of the Works performed by the Bidder: Final design, complete construction of civil works, supply and installation of electromechanical equipment, general infrastructures and auxiliary works, commissioning and trial operation for 3 months of the extension of Waste Water Treatment Plant of Lamia Amount of contract: 1.751.249,40 € Name of Employer: DEYA (Public Utility of Water Supply and Sewage) of Lamia Address: K. Karamanli & Zafeiri, 35100, Lamia – Greece Tel. +30 22310 32950 Fax: +30 22310 45015 E-mail: info@deyalamias.gr	Contractor
06/2012	06/2014	2 years	Contract name: Rehabilitation of the Landfill of the Kilkis Municipality Brief Description of the Works performed by the Bidder: Rehabilitation works which included landscaping works, sealing, leachate collection and treatment works, biogas management works, flood protection and general infrastructures of the Landfill of the Kilkis Municipality Amount of contract: 3.822.317,07,00 € Name of Employer: Municipality of Kilkis Address: Georgiou Kapeta 17, 61100, Kilkis– Greece Tel. +30 23413 52275 Fax: +30 23413 52249	Joint Venture (Owner of 95.30%)
03/2014	08/2015	1 year and 5 months	Contract name: Wastewater Treatment Plant of Kallirachi in Thassos Brief Description of the Works performed by the Bidder: Complete construction of civil works, supply and installation of electromechanical equipment, general infrastructures and auxiliary works, commissioning of the Wastewater Treatment Plant and its sewage transfer pump station of Kallirachi in Thassos island Equivalent population: 3.000 Amount of contract: 1.421.000,00 € Name of Employer: Municipality of Thassos Address: Pierre de Vabez 7, 64004, Thassos-Greece Tel. +30 25933 50100 Fax: +30 25930 22104	Contractor

GEORGIOS KARKANIAS
PRESIDENT

03/12/18

General Construction Experience				
Starting Month Year	Ending Month Year	Years	Contract Identification and Name Name and Address of Employer Brief Description of the Works Executed by the Tenderer	Role of Tenderer
03/2014	12/2015	1 years and 9 months	Contract name: Wastewater Treatment Plant of Leianokladi- Ypati Brief Description of the Works performed by the Bidder: Final design, complete construction of civil works, supply and installation of electromechanical equipment, general infrastructures and auxiliary works, commissioning and trial operation for 4 months of the Wastewater Treatment Plant of Leianokladi- Ypati Amount of contract: 2.892.868,00 € Name of Employer: DEYA (Public Utility of Water Supply and Sewage) of Lamia Address: K. Karamanli & Zafeiri, 35100, Lamia – Greece Tel. +30 22310 32950 Fax: +30 22310 45015 E-mail: info@deyalamias.gr	Contractor
10/2015	04/2016	6 months	Contract name: Landfill extension of the urban area of Volos Brief Description of the Works performed by the Bidder: Construction of landfill extension which included earth works, sealing works and civil works of the Sanitary Landfill of the urban area of Volos Amount of contract: 380.830,40 € Name of Employer (Contracting Authority): Municipality of Volos Address: Spirer Building, 2nd Floor , Mikrasiaton 81, 38331, Volos-Greece Tel. +30 24210 94048 Fax: +30 24213 50175	Contractor

GEORGIOS KARKANIAS
PRESIDENT

03/12/18

KARKANIAS
ENVIRONMENTAL TECHNOLOGY S.A.

Form EXP – 2 (a): Specific Construction Experience

Contract of Similar Size and Nature			
Contract No 3638/E/ 12.11.2010	Contract Identification	"Extension of the Wastewater Treatment Plant of Lamia"	
Award Date	12.11.2010	Completion Date	11.10.2012
Role in Contract	✓ Contractor	Management Contractor	Subcontractor
Total Contract Amount	1.751.249,40 EURO		
If partner in a JVCA or subcontractor, specify participation of total contract amount	Percent of Total	Amount	
Employer's Name Address Telephone/Fax Number E-mail	DEYA (Public Utility of Water Supply and Sewage) of Lamia K. Karamanli & Zafeiri, 35100, Lamia – Greece Tel. +30 22310 32950 Fax: +30 22310 45015 E-mail: info@deyalamias.gr		
Description of the similarity in accordance with criteria due to table 2.4.,Clause 2.4.2 of Tenderers Qualifications			
	See attachements (final account and execution certificate of the project)		

GEORGIOS KARKANIAS
PRESIDENT

03/12/18

OFFICIAL TRANSLATION FROM THE GREEK LANGUAGE

Lamia, 08/02/2017
File No:688/E

D.E.Y.A. (Public Utility of Water Supply and Sewage)
OF LAMIA
TECHNICAL SERVICE

Postal Address: A. Papandreou & T. Isaak Streets, GR – 35133, Lamia
Authorized Agents D. Antoniou, G. Apostolopoulos, Th. Chadoulis
Tel.: (0030) 22310 33850
Fax: (0030) 22310 45015
Email: info@devalamias.gr

Subject: Project Execution Certificate

Ref: //

To
KARKANIAS ENVIRONMENTAL TECHNOLOGY S.A.
INDUSTRIAL ZONE OF LARISSA
PO Box: 3053 GR – 41004
Tel: (+30) 2410 541386
Fax: (+30) 2410 541 354

PROJECT EXECUTION CERTIFICATE

This is to certify that:

- The Contractor of the Projects with the name: "Extension of the Wastewater Treatment Plant of Lamia" and "Extension of the Wastewater Treatment Plant of Lamia (Phase A')" was the Company named "KARKANIAS ENVIRONMENTAL TECHNOLOGY S.A."
- The contracting parties have signed the Construction Contract with the File No 3638/E/12.11.2010 of the amount of 1.751.249,40 € (including VAT) and Construction Contract with the File No 1222/E/11.04.2011 of the amount of 788.076,00 € (including VAT) respectively.
- According to the aforementioned contracts and the bidding documentation, these assignments consisted of designing the project's implementation, the full construction and delivery of the Project at a good operational status, the extension of the Wastewater Treatment Plant as well as the infrastructure works (auxiliary works) and the 3-monht testing period of the Project's efficient operation.
- The two aforementioned projects were completed on 11/10/2012 and 10/08/2012 respectively. In addition and in line with the contractual obligations, the contractor executed the 3-month testing period of the project's efficient operation by the aforementioned deadlines.
- The aforementioned Projects have been executed skilfully and by the agreed deadlines; the contribution of "KARKANIAS ENVIRONMENTAL TECHNOLOGY S.A." to the successful completion of the Projects has been proved essential and effective.
- According to the technical description included in the Bidding Documentation, the total capacity of both Projects concerning the Wastewater Treatment Plant of Lamia is as follows:
  - Population Equivalent: 31.083 residents
  - Average Wastewater flow 6.833 m^3/d
  - Sewage flow 15 m^3/d

GEORGIOS KARKANIAS
PRESIDENT

03/12/18

○ Industrial Waste flow	623m^3/d
○ Total Flow	7.471m^3/d
Inlet Pollutant Loads	
○ Organic Loading BOD_5	1.907 kg/d
○ Suspended solids	2.303 kg/d
○ Total Nitrogen	383 kg/d
○ Total Phosphorus	67kg/d

The treated wastewater is disposed in a drainage trench (the trench of Lamia) which outfalls into the Maliakos Gulf, by diversion of the Spercheios River, pursuant to Decision No. οικ.105453/05.07.2006 concerning the approval of environmental terms, issued by the Environmental Committee of the Ministry of Environment, Planning and Public Works, as renewed and amended by Decision No. οικ.197163/28.03.2012 of the Environmental Committee of the Ministry of Environment, Energy and Climate Change, as well as by Joint Ministerial Decision No. 5673/400/05.03.97 (EU Directive: 91/271/EEC).

The quality characteristics of the treated wastewater outlet are the following:

PARAMETERS	**CONCENTRATION**
BOD_5 (mg/l)	<25
COD (mg/l)	<90
Suspended solids (SS) (mg/l)	<25
Settleable solids tested in 2h time in an imhoff cone	<0,3ml/l
Total Nitrogen (TN) (mg/l)	≤10
Ammoniacal Nitrogen ($N\text{-}NH_4^*$) (mg/l)	≤2
Total Phosphorus (TP) (mg/l)	≤10
Grease / oil	≤0,1
Floating solids	0

The treatment method applied in the Plant consists of the activated sludge system with extended aeration and simultaneous stabilization of the sludge, biological removal of nitrogen (nitrification - denitrification), as well as of a disinfection unit (chlorination – dechlorination) of the treated wastewater. The excess sludge is treated in sludge thickening tanks and it is mechanically dewatered by a decanter.

The two Projects of the WWTP of Lamia also included the construction of subsidiary units which are briefly presented in the following table:

- A Sewage Pre-Treatment Unit (pre-treatment compact unit for screening and grit removal)
- One Splitting manhole

GEORGIOS KARKANIAS
PRESIDENT

03/12/18

- One Biological Reactor, i.e. a denitrification – aeration tank which consists of two denitrification departments of simultaneous operation and two aeration departments of simultaneous operation too.
- Two (2) pumping stations for the recirculation of the mixed liquor, with 735m^3/h each.
- One building for the aeration blowers – Electrical Power
- A Secondary sedimentation tank
- One pumping station for the recirculation and removal of the excess sludge, with capacity of 628m^3/h.
- One building for the decanter used for the mechanical dewatering of the sludge.
- Other Auxiliary Works which serve the above units.

This certificate is delivered upon request of KARKANIAS ENVIRONMENTAL TECHNOLOGY S.A. as an evidence of the Company's experience in a Public Tender, as well as for all legal intents and purposes.

The Head of the Technical service
(signature and stamp of D.E.Y.A. of Lamia)
Dion. Panagiotopoulos
Civil Engineer

Internal Distribution to:

- Technical Service of D.E.Y.A. of Lamia
- Contracting Authority of the Project

****

I, the undersigned certified translator, do hereby certify that the foregoing is a true translation of the attached Greek document, pursuant to Presidential Decree No.169/17.6.2002.

Larissa, 23/02/17

PANHELLENIC ASSOCIATION OF PROFESSIONAL TRANSLATORS' GRADUATES OF THE IONIAN UNIVERSITY
Reg No 111
KONSTANTINA MICHAILAKI
Certified Translator
1, Marinou Antipa str., Larissa
Tel. +30 2410 549998

KONSTANTINA MICHAILAKI
Certified Translator
Ionian University Graduate
1, Marinou Antipa str., Gr. 412 22
Larissa - Tel. +30 2410 549998
Tax ID 066330544

Decision No 121/05
Corfu Court of First Instance

GEORGIOS KARKANIAS
PRESIDENT

03/12/18

ΔΗΜΟΤΙΚΗ ΕΠΙΧΕΙΡΗΣΗ
ΥΔΡΕΥΣΗΣ - ΑΠΟΧΕΤΕΥΣΗΣ
Λ Α Μ Ι Α Σ

ΤΕΧΝΙΚΗ ΥΠΗΡΕΣΙΑ

Λαμία 8 - 2 - 2017

Αριθ. Πρωτ. : 688/Ε

Ταχ. Δ/νση : : Α. Παπανδρέου & Τ. Ισαάκ
35 133 Λαμία
Αρμόδιοι : Δ. Αντωνίου, Γ. Αποστολόπουλος
Θ. Χαδούλης
Τηλέφωνο : 22310 - 33850
FAX : 22310 - 45015
E-mail : info@deyalamias.gr
ΘΕΜΑ: Βεβαίωση εκτέλεσης έργων.
ΣΧΕΤ.:

Προς
ΚΑΡΚΑΝΙΑΣ
ΤΕΧΝΟΛΟΓΙΑ ΠΕΡΙΒΑΛΛΟΝΤΟΣ Α.Ε.
ΒΙ.ΠΕ. ΛΑΡΙΣΑΣ
Τ.Θ. 3053 Τ.Κ. 41004
ΤΗΛ. : 2410 - 541386
FAX. : 2410 - 541354

ΒΕΒΑΙΩΣΗ ΕΚΤΕΛΕΣΗΣ ΕΡΓΩΝ

Βεβαιώνεται ότι:

- Ανάδοχος των έργων «Επέκταση Εγκαταστάσεων Βιολογικού Καθαρισμού Λαμίας» και «Επέκταση Εγκαταστάσεων Βιολογικού Καθαρισμού Λαμίας (Α' στάδιο)» ήταν η εταιρία ΚΑΡΚΑΝΙΑΣ ΤΕΧΝΟΛΟΓΙΑ ΠΕΡΙΒΑΛΛΟΝΤΟΣ Α.Ε.
- Υπογράφηκαν αντίστοιχα η αριθ. πρωτ 3638/Ε/12.11.2010 Σύμβαση εκτέλεσης έργου, δαπάνης 1.751.249,40€ με Φ.Π.Α. και η αριθ. πρωτ. 1222/Ε/11.04.2011 Σύμβαση εκτέλεσης έργου, δαπάνης 788.076,44€ με Φ.Π.Α.
- Σύμφωνα με τις προαναφερόμενες συμβάσεις και τα τεύχη δημοπράτησης οι εργολαβίες αυτές περιελάμβαναν αντίστοιχα την σύνταξη της μελέτης εφαρμογής του έργου, την πλήρη κατασκευή και παράδοση σε θέση καλής λειτουργίας της επέκτασης των εγκαταστάσεων βιολογικού καθαρισμού των λυμάτων, καθώς και των κατασκευών εξυπηρέτησής τους (λοιπά βοηθητικά έργα) και την τρίμηνη δοκιμαστική /αποδοτική λειτουργία τους.
- Τα δύο προαναφερόμενα έργα ολοκληρώθηκαν αντίστοιχα στις 11/10/2012 και στις 10/08/2012. Επιπλέον, στα πλαίσια των εν λόγω δύο συμβάσεων, ο ανάδοχος εκτέλεσε την τρίμηνη δοκιμαστική – αποδοτική λειτουργία των δύο έργων εντός των αντίστοιχων προαναφερόμενων προθεσμιών.
- Τα προαναφερόμενα δύο έργα έχουν εκτελεσθεί έντεχνα, εμπρόθεσμα σύμφωνα με τα εγκεκριμένα χρονοδιαγράμματα και η συμβολή της αναδόχου εταιρίας ΚΑΡΚΑΝΙΑΣ ΤΕΧΝΟΛΟΓΙΑ ΠΕΡΙΒΑΛΛΟΝΤΟΣ Α.Ε. στην άρτια κατασκευή του έργου ήταν ουσιώδης και αποτελεσματική.
- Η <u>δυναμικότητα συνολικά και των δύο έργων της επέκτασης</u> των εγκαταστάσεων Βιολογικού Καθαρισμού Λαμίας, σύμφωνα με την τεχνική περιγραφή των τευχών δημοπράτησής αυτών είναι:

GEORGIOS KARKANIAS
PRESIDENT

03/12/18

- Ισοδύναμος πληθυσμός 31.083κάτοικοι
- Μέση Παροχή λυμάτων $6.833 m^3/d$
- Παροχή Βοθρολυμάτων $15 m^3/d$
- Παροχή Βιομηχανικών αποβλήτων $623 m^3/d$
- Συνολική παροχή σχεδιασμού $7.471 m^3/d$

Ρυπαντικά Φορτία εισόδου

- Οργανικά φορτίο BOD_5 1.907kg/d
- Αιωρούμενα στερεά 2.303kg/d
- Ολικό άζωτο 383kg/d
- Ολικός φώσφορος 67kg/d

Η διάθεση των επεξεργασμένων λυμάτων γίνεται σε αποστραγγιστική τάφρο (τάφρο Λαμίας), η οποία εκβάλλει στον Μαλιακό κόλπο, μέσω εκτροπής του Σπερχειού ποταμού, σύμφωνα με την Α.Π. οικ. 105453/05.07.2006 απόφαση έγκρισης περιβαλλοντικών όρων της ΕΥΠΕ/ΥΠΕΧΩΔΕ, η οποία ανανεώθηκε και τροποποιήθηκε με την Α.Π. οικ. 197163/28.03.2012 της ΕΥΠΕ/ΥΠΕΚΑ, καθώς και την ΚΥΑ 5673/400/05.03.97 (οδηγία 91/271/ ΕΟΚ). Τα ποιοτικά χαρακτηριστικά της εκροής των επεξεργασμένων λυμάτων είναι τα εξής:

ΠΑΡΑΜΕΤΡΟΣ	**ΣΥΓΚΕΝΤΡΩΣΗ**
BOD_5 (mg/l)	< 25
COD (mg/l)	< 90
Αιωρούμενα στερεά SS (mg/l)	<25
Καθιζάνοντα στερεά εντός 2h σε κώνο imhoff	<0,3ml/l
Ολικό άζωτο (TN) (mg/l)	≤10
Αμμωνιακό άζωτο ($N\text{-}NH_4^+$) (mg/l)	≤2
Ολικός φώσφορος (TP) (mg/l)	≤10
Λίπη-Έλαια	≤0,1
Επιπλέοντα στερεά	0

Η εφαρμοζόμενη μέθοδος επεξεργασίας είναι το σύστημα της ενεργού ιλύος με παρατεταμένο αερισμό με ταυτόχρονη σταθεροποίηση της ιλύος, βιολογική απομάκρυνση του αζώτου (νιτροποίηση – απονιτροποίηση), καθώς και μονάδα απολύμανσης (χλωρίωσης-αποχλωρίωσης) των επεξεργασμένων λυμάτων. Επίσης, για την επεξεργασία της περίσσειας ιλύος προβλέπονται δεξαμενές πάχυνσης ιλύος και μηχανική αφυδάτωσή της σε φυγοκεντρικό διαχωριστή ιλύος.

Τα δύο έργα επέκτασης των εγκαταστάσεων Βιολογικού Καθαρισμού Λαμίας περιλαμβάνουν την κατασκευή των επιμέρους μονάδων, που παρουσιάζονται συνοπτικά στη συνέχεια:

- Μονάδα προεπεξεργασίας βοθρολυμάτων (προκατασκευασμένο συγκρότημα εσχάρωσης - εξάμμωσης)
- Φρεάτιο μερισμού
- Βιολογικός αντιδραστήρας, ήτοι δεξαμενή απονιτροποίησης – αερισμού, η οποία περιλαμβάνει δύο παράλληλης λειτουργίας διαμερίσματα απόνιτροποίησης και ομοίως δύο διαμερίσματα αερισμού

GEORGIOS KARKANIAS
PRESIDENT

03/12/18

- Δύο (2) Αντλιοστάσια ανακυκλοφορίας – ανάμικτου υγρού, έκαστο δυναμικότητας 735m^3/h
- Κτίριο φυσητήρων αερισμού – Ηλεκτρικού πίνακα
- Δεξαμενή δευτεροβάθμιας καθίζησης
- Αντλιοστάσιο ανακυκλοφορίας – απαγωγής περίσσειας ιλύος, δυναμικότητας 628m^3/h
- Κτίριο εγκατάστασης ενός φυγοκεντρικού διαχωριστή για τη μηχανική αφυδάτωση της ιλύος
- Λοιπά βοηθητικά έργα εξυπηρέτησης των ανωτέρω

Η παρούσα χορηγείται μετά από αίτηση της εταιρίας ΚΑΡΚΑΝΙΑΣ ΤΕΧΝΟΛΟΓΙΑ ΠΕΡΙΒΑΛΛΟΝΤΟΣ Α.Ε., για να χρησιμοποιηθεί ως στοιχείο εμπειρίας σε δημοπρασίες καθώς και για κάθε άλλη νόμιμη χρήση.

Ο Προϊστάμενος Τ.Υ.

Διον. Παναγιωτόπουλος
Πολιτικός Μηχανικός

Ε.Δ.
Τ.Υ./ Φ. Έργου

GEORGIOS KARKANTAS
PRESIDENT

03/12/18

OFFICIAL TRANSLATION FROM THE GREEK LANGUAGE

HELLENIC REPUBLIC
PUBLIC UTILITY OF WATER SUPPLY AND SEWAGE OF LAMIA
[D.E.Y.A. of Lamia]
TECHNICAL SERVICE

Budget charges
for the Contractor

17th ACCOUNT (FINAL ACCOUNT) AND CERTIFICATION OF PAYABLE WORKS AND MATERIALS' SUPPLY

Number of Design:	//
Number of Project:	//
Public Utility of Water Supply and Sewage of:	Lamia, Municipal Department: of Lamia
Contractor:	KARKANIAS ENVIRONMENTAL TECHNOLOGY S.A.
Type of Project:	Extension of the Wastewater Treatment Plant of Lamia

SUMMARIZED TABLE OF CREDITS AND PAYMENTS

BUDGET (VAT not included)		1.460.000,00			
Approvals		Euro	**Payments**		Euro
Sum initially approved	Works	1.215.400,00	Total payments until today	Works	1.414.900,57
	VAT	279.542,00		VAT	325.427,13
	Total	1.494.942,00		Total	1.740.327,70
Sum initially approved for unexpected expenses	Works	182.310,00	Sums to be paid based on the present account	Works	0,00
	VAT	41.931,30		VAT	0,00
	Total	224.241,30		Total	0,00
Reviews	Works	26.070,00	Total payments	Works	1.414.900,57
	VAT	5.996,10		VAT	325.427,13
	Total	32.066,10		Total	1.740.327,70
Total sum of the initial approval	Works	1.423.780,00	Deductions including VAT		0,00
	VAT	327.469,40	Total sum of executed works including VAT		1.740.327,70
	Total	1.751.249,40			
Approval of Supplementary Sums	Works	-2.725,87			
	VAT	-626,95			
	Total	-3.352,82			
Total approved sums	Works	1.421.054,13			
	VAT	326.842,45			
	Total	1.747.896,58			
Works executed and paid based on the present account until today (VAT included)		1.740.327,70			
Balance		7.568,88			

The undersigned engineers of the Technical Service of the Public Utility of Water Supply and Sewage of Lamia, Dimitrios Antoniou, Grigorios Apostolopoulos and Theodoros Chadoulis, taking into account:

- the design study of D.E.Y.A. of Lamia with No. 5/08
- the Decision of the Management Board of D.E.Y.A. of Lamia with Number 25/5.5.2010 concerning the approval of the above works execution, which was legally assigned to KARKANIAS ENVIRONMENTAL TECHNOLOGY S.A. by virtue of Decision No. 90/2.11.2010 of the Management Board of D.E.Y.A. of Lamia and after the results of the relevant Public Tender,

GEORGIOS KARKANIAS
PRESIDENT

03/12/18

OFFICIAL TRANSLATION FROM THE GREEK LANGUAGE

the Project Execution Contract dated 12.11.2010 which was signed by the Management Board of D.E.Y.A. of Lamia and KARKANIAS ENVIRONMENTAL TECHNOLOGY S.A., Contractor, and

the measurement of the executed works dated ///

hereby certify that the above Contractor shall be paid the amount of // €, according to the account in the back:

VAT not included: **Zero #0,00#**

VAT included: **Zero #0,00#**

DEDUCTIONS	Euro
1% Contribution to the Greek Engineers Fund [ΤΣΜΕΔΕ]	0,00
0,5% Contribution to the National Technical University of Athens	0,00
0,2% Contribution to the Greek Engineers Fund [ΤΣΜΕΔΕ]	0,00
2,4% deduction for stamp tax	0,00
3% deduction for Income Tax	0,00
Total Deductions	0,00

Lamia, 29/06/2016

The Project's Supervisors

(signature)	*(signature)*	*(signature)*
D. Antoniou	Grig. Apostolopoulos	Theod. Chadoulis
Electrical & Mechanical Engineer	Chemical Engineer	Civil Engineer

Countersigned in Lamia, 30/06/2016

The Director of D.E.Y.A. of Lamia	The Head of the Technical Service
(stamp of D.E.Y.A. of Lamia)	*(signature)*
Ioannis Theodorakopoulos	Dionysios Panagiotopoulos
	Civil Engineer

****

I, the undersigned certified translator, do hereby certify that the foregoing is a true translation of the attached Greek document, pursuant to Presidential Decree No.169/17.6.2002.

Larissa, 18/05/17

ASSOCIATION OF PROFESSIONAL TRANSLATORS GRADUATES OF THE IONIAN UNIVERSITY
Reg. No 111
KONSTANTINA MICHAILAKI
Certified Translator
1, Marinou Antipa str., Larissa
Tel. +30 2410 549998

KONSTANTINA MICHAILAKI
Certified Translator
Ionian University Graduate
1, Marinou Antipa str. GR - 412 22
Larissa, Tel. +30 2410 549998
Tax ID 060990544

Decision No 121/05
Corfu Court of First Instance

GEORGIOS KARKANIAS
PRESIDENT

03/12/18

Ανάδοχος

ΕΛΛΗΝΙΚΗ ΔΗΜΟΚΡΑΤΙΑ
Δ.Ε.Υ.Α.Λ.
ΤΕΧΝΙΚΗ ΥΠΗΡΕΣΙΑ

ΚΑΤΑΛΟΓΙΣΜΟΣ ΔΑΠΑΝΗΣ
ΠΡΟΥΠΟΛΟΓΙΣΜΟΥ

17ος ΛΟΓΑΡΙΑΣΜΟΣ (ΤΕΛΙΚΟΣ) ΚΑΙ ΠΙΣΤΟΠΟΙΗΣΗ ΠΡΟΣ ΠΛΗΡΩΜΗ ΕΡΓΑΣΙΩΝ ΚΑΙ ΠΡΟΜΗΘΕΙΑΣ ΥΛΙΚΩΝ

Αρ. Μελέτης:
Αρ. Έργου:
Δ.Ε.Υ.Α.:ΛΑΜΙΑΣ ΔΗΜ. ΔΙΑΜ/ΣΜΑ:ΛΑΜΙΑΣ
Εργολαβία: ΚΑΡΚΑΝΙΑΣ ΤΕΧΝΟΛΟΓΙΑ ΠΕΡΙΒΑΛΛΟΝΤΟΣ Α.Ε.
Είδος εκτελούμενου έργου: ΕΠΕΚΤΑΣΗ ΕΓΚΑΤΑΣΤΑΣΕΩΝ ΒΙΟΛΟΓΙΚΟΥ ΚΑΘΑΡΙΣΜΟΥ ΛΑΜΙΑΣ

ΣΥΝΟΠΤΙΚΟΣ ΠΙΝΑΚΑΣ ΠΙΣΤΩΣΕΩΝ ΚΑΙ ΠΛΗΡΩΜΩΝ

ΠΡΟΥΠΟΛΟΓΙΣΜΟΣ (προ Φ.Π.Α.)		1.460.000,00			
ΕΓΚΡΙΣΕΙΣ		**Ευρώ**	**ΠΛΗΡΩΜΕΣ**		**Ευρώ**
Ποσό εγκριθέν αρχικά	Εργασίες	1.215.400,00	**Άθρ. των μέχρι σήμερα γενομ. Πληρωμών**	Εργασίες	1.414.900,57
	ΦΠΑ	279.542,00		ΦΠΑ	325.427,13
	Σύνολο	1.494.942,00		Σύνολο	1.740.327,70
Ομοίως για απρόβλεπτες δαπάνες	Εργασίες	182.310,00	**Ποσό πληρωτ. δυνάμει του παρ. λογ/σμού**	Εργασίες	0,00
	ΦΠΑ	41.931,30		ΦΠΑ	0,00
	Σύνολο	224.241,30		Σύνολο	0,00
Αναθεωρήσεις	Εργασίες	26.070,00	**Άθροισμα πληρωμών**	Εργασίες	1.414.900,57
	ΦΠΑ	5.996,10		ΦΠΑ	325.427,13
	Σύνολο	32.066,10		Σύνολο	1.740.327,70
Άθροισμα αρχικής εγκρίσεως	Εργασίες	1.423.780,00	**Κρατήσεις με ΦΠΑ**		0,00
	ΦΠΑ	327.469,40	**Άθροισμα εκτελεσθεισών εργασιών με ΦΠΑ**		1.740.327,70
	Σύνολο	1.751.249,40			
Ποσά εγκριθέντα Συμπληρωματικώς	Εργασίες	-2.725,87			
	ΦΠΑ	-626,95			
	Σύνολο	-3.352,82			
Άθροισμα εγκρίσεων	Εργασίες	1.421.054,13			
	ΦΠΑ	326.842,45			
	Σύνολο	1.747.896,58			
Εργασίες εκτελεσθ. μέχρι σήμερα και πληρ. διά του παρόντος Λογ/σμού με ΦΠΑ		1.740.327,70			
Υπόλοιπο εγκρίσεων		7.568,88			

Οι υπογράφοντες μηχανικοί της Τεχνικής Υπηρεσίας της Δ.Ε.Υ.Α. Λαμίας
Δημήτριος Αντωνίου, Γρηγόριος Αποστολόπουλος και Θεόδωρος Χαδούλης, έχοντας υπόψη την με αριθμό 25/5.5.2010 απόφαση του Δ.Σ. της Δ.Ε.Υ.Α.Λ., με την οποία εγκρίθηκε η εκτέλεση των στην επικεφαλίδα εργασιών, με βάση την υπ' αριθμόν 5/ 08 μελέτη της Δ.Ε.Υ.Α.Λ., που νόμιμα εγκρίθηκαν και κατακυρώθηκαν ύστερα από διεξαχθέντα τακτικό μειοδοτικό διαγωνισμό στο όνομα της
ΚΑΡΚΑΝΙΑΣ ΤΕΧΝΟΛΟΓΙΑ ΠΕΡΙΒΑΛΛΟΝΤΟΣ Α.Ε.
με την υπ' αριθμόν 90/2.11.2010 απόφαση του Δ.Σ. της Δ.Ε.Υ.Α.Λ.
και με βάση αυτής συνταχθείσας από 12.11.2010 Σύμβασης Εκτέλεσης Έργου του Προέδρου του Δ.Σ. της Δ.Ε.Υ.Α.Λ. Κοτρωνιά Γεωργίου μετά του αναδόχου ΚΑΡΚΑΝΙΑΣ ΤΕΧΝΟΛΟΓΙΑ ΠΕΡΙΒΑΛΛΟΝΤΟΣ Α.Ε.
και, τέλος, την από / / επιμέτρηση εκτελεσθεισών εργασιών.
Πιστοποιούν ότι μπορεί να πληρωθεί σύμφωνα με τον όπισθεν λογαριασμό στον ανάδοχο το ποσό των €:
Προ ΦΠΑ: Μηδέν # 0,00 #
Με ΦΠΑ: Μηδέν # 0,00 #

ΚΡΑΤΗΣΕΙΣ	Ευρώ
Υπέρ ΤΣΜΕΔΕ 1%	0,00
Υπέρ ΕΜΠ 0,5%	0,00
Υπέρ ΤΣΜΕΔΕ 0,2%	0,00
Κρατήσεις 2,4% χαρτ/μου	0,00
Υπέρ ΦΕ 3%	0,00
Σύνολο κρατήσεων	0,00

Λαμία 29/ 6 /2016
Οι επιβλέποντες το έργο

Δ. Αντωνίου — Ηλ/γος-Μηχ/γος Μηχ/κός
Γρηγ. Αποστολόπουλος — Χημικός Μηχ/κός
Θεοδ. Χαδούλης — Πολιτικός Μηχ/κός

ΕΘΕΩΡΗΘΗ, Λαμία / /2016
0,00 €
Ο Διευθυντής Δ.Ε.Υ.Α.Λ.

Θεοδωρακόπουλος Ιωάννης

Λαμία 30/ 6 /2016
Ο Προϊστάμενος Τ.Υ.

Διονύσιος Παπαγιωτόπουλος
Πολιτικός Μηχανικός

GEORGIOS KARKANIAS
PRESIDENT

03/12/18

KARKANIAS

Form EXP – 2(b): Specific Construction Experience

Contract of Similar Size and Nature			
Contract No 1486/E/ 13.03.2014	Contract Identification	"Wastewater Treatment Plant of Lianokladi-Ypati"	
Award Date	13.03.2014	Completion Date	13.12.2015
Role in Contract	✓ Contractor	Management Contractor	Subcontractor
Total Contract Amount	2.892.868,00 EURO		
If partner in a JVCA or subcontractor, specify participation of total contract amount	Percent of Total	Amount	
Employer's Name Address Telephone/Fax Number E-mail	DEYA (Public Utility of Water Supply and Sewage) of Lamia K. Karamanli & Zafeiri, 35100, Lamia – Greece Tel. +30 22310 32950 Fax: +30 22310 45015 E-mail: info@deyalamias.gr		
Description of the similarity in accordance with criteria due to table 2.4.,Clause 2.4.2 of Tenderers Qualifications			
	See attachements (final account and execution certificate of the project)		

GEORGIOS KARKANIAS
PRESIDENT

03/12/18

OFFICIAL TRANSLATION FROM THE GREEK LANGUAGE

HELLENIC REPUBLIC
D.E.Y.A. (Public Utility of Water Supply and Sewage)
OF LAMIA
TECHNICAL SERVICE

Postal Address: K. Karamanli & Zafeiri Streets
Authorized Agent D. Antoniou, G. Apostolopoulos
Tel.: (0030) 22310 33850
Fax: (0030) 22310 45015
Email: info@deyalamias.gr

Lamia, 23/01/2017
File No:292/E

Subject: Project Execution Certificate

Ref: //

PROJECT EXECUTION CERTIFICATE

D.E.Y.A. of Lamia, Principal of the Project entitled "Wastewater Treatment Plant of Lianokladi – Ypati" hereby certifies that:

1. The Contractor of the aforementioned Project was the Company with the name "KARKANIAS ENVIRONMENTAL TECHNOLOGY S.A."
2. The contracting parties signed the Construction Contract with File Nr. 1486/E/13.03.2014 of the amount of 2.892.868,00 € (including VAT).
3. According to the aforementioned contract and the bidding documentation, this assignment consisted of the projects' final design, the design of the project's implementation, the full construction of civil engineering works, the supply and installation of the entire mechanical and electrical equipment of the wastewater treatment plant, the 1-month operation of the plant at a good operational status, the 4-month testing period of the plant's efficient operation and the training of the D.E.Y.A. staff.
4. The above Project was completed on 13/12/2015. Furthermore, the contractor has also performed the 1-month operation of the Plant at a good operational status and the 4-month testing period of the plant's efficient operation by the deadline set in the aforementioned contract.
5. The aforementioned Project has been executed skilfully and by the agreed deadline; the contribution of "KARKANIAS ENVIRONMENTAL TECHNOLOGY S.A." to the successful completion of the Project has been proved essential and effective.
6. According to the technical description included in the Bidding Documentation, the project's capacity is as follows:
   - Population Equivalent: 10.000 residents
   - Wastewater flow 2.160 m^3/d

   Pollutant Inlet Load
   - Organic Loading BOD5 650 kg/d

GEORGIOS KARKANIAS
PRESIDENT

03/12/18

- Suspended solids 650 kg/d
- Total Nitrogen 110 kg/d
- Total Phosphorus 18 kg/d

7. The treatment method applied in the Plant consists of the activated sludge system with extended aeration and simultaneous stabilization of the sludge, biological removal of nitrogen (nitrification - denitrification), as well as biological and chemical removal of phosphorus. In addition, the Plant also includes a tertiary treatment unit for the filtration and disinfection of the treated wastewater (chlorination – dechlorination), while the excess sludge (mechanical thickening – dewatering) is treated by a decanter.
8. By virtue of the Decision for the Approval of the Project's Environmental Terms, the treated wastewater of the WWTP is disposed to Spercheios River through a filtration trench. The methods of gravity and pumping can also be used for the wastewater disposal to Spercheios River.
9. The main auxiliary treatment units are constructed of reinforced concrete and they consist of:
   - Inlet works - Sewage Pre-Treatment Unit inside the building
     - inlet pumping station with 312m^3/h capacity (86.67l/s)
     - Pre-treatment compact unit (screening, grit and grease removal)
   - Biological Treatment Unit
     - one bioselection tank, whose effective volume is 40,64m^3
     - one tank for biological dephosphorization with effective volume: 255,85m^3
     - splitting manhole I
     - two denitrification tanks, whose effective volume is 186 m^3 each
     - two facultative zone tanks, whose effective volume is 111,6m^3 each
     - two tanks for wastewater storage and aeration, whose effective volume is 855,6 m^3 each
     - splitting manhole II – chemical dephosphorization
     - two pumping stations for the recirculation of the mixed liquor
     - two sedimentation tanks, whose effective volume is 523,1m^3 each
     - two pumping stations for the recirculation and removal of the excess sludge
   - Filtration Unit with automatic drum filter
   - Unit for disinfection and post-aeration
     - channel flow meter
     - wastewater disinfection tank (chlorination – dechlorination)
     - tank for post-aeration and industrial water
   - Wastewater Disposal Works

GEORGIOS KARKANIAS
PRESIDENT

03/12/18

- outlet manhole and pumping station – sampling manhole and inlet manhole for the filtration trench
- wastewater filtration trench – disposal manhole
- wastewater disposal pipe

- Sludge Treatment Unit
  - sludge storage tank
  - mechanical sludge thickening - dewatering with decanter inside the building
- Power Building (Electrical Power – Emergency Power Generator – Low Voltage Field) – Aeration blowers Building
- Administration Building (central supervision room –SCADA– and chemical laboratory)

This certificate is delivered upon request of the Company in order to be used as experience documentation to a bidding process, as well as for all legal intents and purposes.

The Head of the Technical Service

(signature & stamp of the Hellenic Republic)

Dionysios Panagiotopoulos

Civil Engineer

****

I, the undersigned certified translator, do hereby certify that the foregoing is a true translation of the attached Greek document, pursuant to Presidential Decree No.169/17.6.2002.

Larissa, 25/01/17

KONSTANTINA MICHAILAKI
Certified Translator
Ionian University Graduate
Tax ID 066380544

Decision No 121/05
Corfu Court of First Instance

GEORGIOS KARKANIAS
PRESIDENT

03/12/18

ΔΗΜΟΤΙΚΗ ΕΠΙΧΕΙΡΗΣΗ
ΥΔΡΕΥΣΗΣ - ΑΠΟΧΕΤΕΥΣΗΣ
Λ Α Μ Ι Α Σ

ΤΕΧΝΙΚΗ ΥΠΗΡΕΣΙΑ

Ταχ. Δ/νση: Κ. Καραμανλή και Ζαφείρη
Αρμόδιος:Δ. Αντωνίου, Γ. Αποστολόπουλος
Τηλέφωνο: 22310 33850
Fax: 22310 45015
E-mail: info@deyalamias.gr

Λαμία 23.1.2017
Αριθ. Πρωτ.: 292

ΘΕΜΑ: Βεβαίωση εκτέλεσης έργου
ΣΧΕΤ.:

ΒΕΒΑΙΩΣΗ ΕΚΤΕΛΕΣΗΣ ΕΡΓΟΥ

Η Δημοτική Επιχείρηση Ύδρευσης - Αποχέτευσης Λαμίας, ως κύριος του έργου «Εγκατάσταση Επεξεργασίας Λυμάτων Λειανοκλαδίου - Υπάτης», βεβαιώνει ότι:

1. Ανάδοχος του έργου «Εγκατάσταση Επεξεργασίας Λυμάτων Λειανοκλαδίου - Υπάτης» ήταν η εταιρία ΚΑΡΚΑΝΙΑΣ ΤΕΧΝΟΛΟΓΙΑ ΠΕΡΙΒΑΛΛΟΝΤΟΣ Α.Ε.
2. Υπογράφηκε η αριθ. πρωτ. 1486/Ε/13.03.2014 Σύμβαση εκτέλεσης του έργου, δαπάνης 2.892.868,00€ με Φ.Π.Α.
3. Σύμφωνα με την προαναφερόμενη σύμβαση και τα τεύχη δημοπράτησης η εργολαβία αυτή περιελάμβανε την εκπόνηση της οριστικής μελέτης και της μελέτης εφαρμογής του έργου, την πλήρη κατασκευή των έργων πολιτικού μηχανικού, την προμήθεια και εγκατάσταση όλου του μηχανολογικού και ηλεκτρολογικού εξοπλισμού της εγκατάστασης επεξεργασίας λυμάτων Λειανοκλαδίου - Υπάτης, καθώς και την ενός μηνός θέση σε αποδοτική λειτουργία και την τετράμηνη δοκιμαστική λειτουργία αυτής, συμπεριλαμβανομένης της εκπαίδευσης του προσωπικού της Δ.Ε.Υ.Α.
4. Το εν λόγω έργο ολοκληρώθηκε στις 13.12.2015. Επιπλέον, στα πλαίσια της προαναφερόμενης σύμβασης, ο ανάδοχος εκτέλεσε την ενός μηνός θέση σε αποδοτική λειτουργία και την τετράμηνη δοκιμαστική λειτουργία του έργου εντός της προαναφερόμενης προθεσμίας.
5. Το εν λόγω έργο έχει εκτελεσθεί έντεχνα, εμπρόθεσμα σύμφωνα με το εγκεκριμένο χρονοδιάγραμμα και η συμβολή της αναδόχου εταιρίας ΚΑΡΚΑΝΙΑΣ ΤΕΧΝΟΛΟΓΙΑ ΠΕΡΙΒΑΛΛΟΝΤΟΣ Α.Ε. στην άρτια κατασκευή του έργου ήταν ουσιώδης και αποτελεσματική.

GEORGIOS KARKANIAS
PRESIDENT

23/12/16

6. Η δυναμικότητα της Εγκατάστασης Επεξεργασίας Λυμάτων Λειανοκλαδίου -Υπάτης, σύμφωνα με την τεχνική περιγραφή των τευχών δημοπράτησης αυτής είναι:

• Ισοδύναμος πληθυσμός	10.000 κάτοικοι
• Παροχή λυμάτων	2.160 m^3/d
<u>Ρυπαντικά Φορτία εισόδου</u>	
• Οργανικό φορτίο BOD_5	650 kg/d
• Αιωρούμενα στερεά	650 kg/d
• Ολικό άζωτο	110 kg/d
• Ολικός φώσφορος	18 kg/d

7. Η εφαρμοζόμενη μέθοδος επεξεργασίας είναι το σύστημα ενεργού ιλύος με παρατεταμένο αερισμό με ταυτόχρονη σταθεροποίηση της ιλύος, βιολογική απομάκρυνση του αζώτου (νιτροποίηση -απονιτροποίηση), καθώς και βιολογική και χημική απομάκρυνση φωσφόρου. Επίσης, υπάρχει μονάδα τριτοβάθμιας επεξεργασίας με φίλτρανση και απολύμανση (χλωρίωση και αποχλωρίωση) των επεξεργασμένων λυμάτων. Για την επεξεργασία της περίσσειας ιλύος (μηχανική πάχυνση-αφυδάτωση) έχει εγκατασταθεί φυγοκεντρικός διαχωριστής ιλύος.

8. Τα επεξεργασμένα λύματα της ΕΕΛ, σε συμφωνία με την ισχύουσα Απόφαση έγκρισης περιβαλλοντικών όρων του έργου, διατίθενται μέσω τάφρου διήθησης στον Σπερχειό ποταμό. Επιπλέον, παρέχεται η δυνατότητα διάθεσης, είτε με βαρύτητα, είτε με άντληση στον Σπερχειό ποταμό.

9. Οι βασικές επιμέρους μονάδες επεξεργασίας, κατασκευασμένες από οπλισμένο σκυρόδεμα, είναι οι εξής:

- Έργα εισόδου - Μονάδα προεπεξεργασίας λυμάτων εντός κτιρίου
  - Αντλιοστάσιο εισόδου με δυναμικότητα 312m^3/h (86,67l/s)
  - Προκατασκευασμένο συγκρότημα προεπεξεργασίας (εσχάρωσης, αμμοσυλλογής-λιποσυλλογής)
- Μονάδα βιολογικής επεξεργασίας
  - Δεξαμενή βιοεπιλογής, ωφέλιμου όγκου 40,64m^3
  - Δεξαμενή βιολογικής αποφωσφόρωσης, ωφέλιμου όγκου 255,85m^3
  - Φρεάτιο μερισμού Ι
  - Δύο δεξαμενές απονιτροποίησης, έκαστη ωφέλιμου όγκου 186m^3
  - Δύο δεξαμενές επαμφοτερίζουσας ζώνης, έκαστη ωφέλιμου όγκου 111,6m^3
  - Δύο δεξαμενές αποθήκευσης και αερισμού λυμάτων, έκαστη ωφέλιμου όγκου 855,6m^3
  - Δύο αντλιοστάσια ανακυκλοφορίας ανάμικτου υγρού
  - Φρεάτιο μερισμού ΙΙ – χημική αποφωσφόρωση

GEORGIOS KARKANIAS
PRESIDENT

03/12/19

- Δύο δεξαμενές καθίζησης, έκαστη ωφέλιμου όγκου 523,1m^3
- Αντλιοστάσιο ανακυκλοφορίας και απαγωγής περίσσειας ιλύος

- Μονάδα φίλτρανσης με αυτοκαθαριζόμενο φίλτρο τυμπάνου
- Μονάδα απολύμανσης και μεταερισμού
  - Μετρητής παροχής καναλιού
  - Δεξαμενή Χλωρίωσης - Αποχλωρίωσης
  - Δεξαμενή μεταερισμού – βιομηχανικού νερού
- Έργα διάθεσης λυμάτων
  - Φρεάτιο και αντλιοστάσιο εξόδου ΕΕΛ- δειγματοληψίας και φόρτισης τάφρου διήθησης
  - Τάφρος διήθησης λυμάτων – φρεάτιο διάθεσης
  - Αγωγός διάθεσης λυμάτων
- Μονάδα Επεξεργασίας ιλύος
  - Δεξαμενή αποθήκευσης ιλύος
  - Μηχανική πάχυνση - αφυδάτωση ιλύος με φυγοκεντρικό διαχωριστή (decanter) σε κτίριο
- Κτίριο ενέργειας (Μ/Σ, ΓΠΧΤ, Η/Ζ) και φυσητήρων αερισμού
- Κτίριο διοίκησης (με αίθουσα κεντρικού ελέγχου μέσω SCADA και χημικό εργαστήριο)

Χορηγούμε τη βεβαίωση αυτή κατόπιν αιτήσεως της εταιρίας να χρησιμοποιηθεί ως στοιχείο εμπειρίας σε δημοπρασίες καθώς και για κάθε άλλη νόμιμη χρήση.

Ο Προϊστάμενος Τ.Υ.

Διονύσιος Παναγιωτόπουλος

Πολιτικός Μηχανικός

GEORGIOS KERKANTAS
PRESIDENT

03/12/18

OFFICIAL TRANSLATION FROM THE GREEK LANGUAGE

TECHNICAL SERVICE

Budget charges

13th FINAL ACCOUNT AND CERTIFICATION
OF PAYABLE WORKS AND MATERIALS' SUPPLY

Number of Design:	38/2012
Number of Project:	//
Public Utility of Water Supply and Sewage of:	Lamia, Municipal Unit of Lianokladi
Contractor:	KARKANIAS ENVIRONMENTAL TECHNOLOGY S.A.
Type of Project:	Wastewater Treatment Plant of Lianokladi - Ypati

SUMMARIZED TABLE OF CREDITS AND PAYMENTS

BUDGET (VAT not included)		2.550.000,00	TENDER DISCOUNT 7,906%		
Approvals		Euro	**Payments**		Euro
Sum initially approved	Works	2.116.920,00	Total payments until today	Works	2.156.449,46
	VAT	486.891,60		VAT	59.677,60
	Total	2.603.811,60		Total	2.216.127,06
Sum initially approved for unexpected expenses	Works	190.522,80	Sums to be paid based on the present account	Works	0,00
	VAT	43.820,24		VAT	
	Total	234.343,04		Total	0,00
Reviews	Works	44.482,40	Total payments	Works	2.156.449,46
	VAT	10.230,95		VAT	59.677,60
	Total	54.713,35		Total	2.216.127,06
Total sum of the initial approval	Works	2.351.925,20	Deductions including VAT		0,00
	VAT	540.942,80	Total sum of executed works including VAT		2.216.127,06
	Total	2.892.868,00			
Approval of Supplementary Sums	Works	0,00			
	VAT	0,00			
	Total	0,00			
Total approved sums	Works	2.351.925,20			
	VAT	540.942,80			
	Total	2.892.868,00			
Works executed and paid based on the present account until today (VAT included)		2.216.127,06			
Balance		676.740,94			

The undersigned engineers of the Technical Service of the Public Utility of Water Supply and Sewage of Lamia, Grigorios Apostolopoulos, Dimitrios Antoniou and Maria Lepida, taking into account:

- the design study of D.E.Y.A. of Lamia with No. 38/2012
- the Decision of the Management Board of D.E.Y.A. of Lamia with Number 80/2013 concerning the approval of the above works' execution, which was legally assigned to KARKANIAS ENVIRONMENTAL TECHNOLOGY S.A. by virtue of Decision No. 18/2014 of the Management Board of D.E.Y.A. of Lamia and after the results of the relevant Public Tender,
- the Project Execution Contract dated 13.03.2014 which was signed by the Chairman of the Management Board of D.E.Y.A. of Lamia, Georgios Kotronias, and KARKANIAS ENVIRONMENTAL TECHNOLOGY S.A., Contractor, and
- the measurement of the executed works dated ///

GEORGIOS KARKANIAS
PRESIDENT

03/12/18

OFFICIAL TRANSLATION FROM THE GREEK LANGUAGE

hereby certify that the above Contractor shall be paid the amount of // €, according to the account in the back:
VAT not included: **Zero #0,00#**

DEDUCTIONS	Euro
0,2% Contribution to the Greek Engineers Fund [ΤΣΜΕΔΕ]	0,00
2,4% deduction for stamp tax	0,00
3% deduction for Income Tax	0,00
Total Deductions	0,00

Lamia, 13/02/2017
The Project's Supervisors

(signature)
Grig. Apostolopoulos
Chemical Engineer

(signature)
D. Antoniou
Electrical & Mechanical Engineer

13/03/2017
The Director of D.E.Y.A. of Lamia
(signature)
(stamp of D.E.Y.A. of Lamia)
Ioannis Theodorakopoulos

Lamia, 13/02/2017
The Head of the Technical Service

(signature)
Dionysios Panagiotopoulos
Civil Engineer

****

I, the undersigned certified translator, do hereby certify that the foregoing is a true translation of the attached Greek document, pursuant to Presidential Decree No.169/17.6.2002.
Larissa, 18/05/17

Reg. No 111
KONSTANTINA MICHAILAKI
Certified Translator
1, Marinou Antipa str., Larissa
Tel. +30 2410 549998

KONSTANTINA MICHAILAKI
Certified Translator
Ionian University Graduate
1, Marinou Antipa str., GR - 412 22
Larissa - Tel. +30 2410 549998
Tax ID 066330544

Decision No 121/05
Corfu Court of First Instance

GEORGIOS KARKANIAS
PRESIDENT

03/12/18

ΤΕΧΝΙΚΗ ΥΠΗΡΕΣΙΑ

ΚΑΤΑΛΟΓΙΣΜΟΣ ΔΑΠΑΝΗΣ
ΠΡΟΥΠΟΛΟΓΙΣΜΟΥ

13ος ΤΕΛΙΚΟΣ ΛΟΓΑΡΙΑΣΜΟΣ ΚΑΙ ΠΙΣΤΟΠΟΙΗΣΗ
ΠΡΟΣ ΠΛΗΡΩΜΗ ΕΡΓΑΣΙΩΝ ΚΑΙ ΠΡΟΜΗΘΕΙΑΣ ΥΛΙΚΩΝ

Αρ. Μελέτης: 38/2012
Αρ. Έργου:
Δ.Ε.Υ.Α.:ΛΑΜΙΑΣ ΔΗΜ. ΕΝΟΤΗΤΑ: ΛΕΙΑΝΟΚΛΑΔΙΟΥ
Εργολαβία: ΚΑΡΚΑΝΙΑΣ ΤΕΧΝΟΛΟΓΙΑ ΠΕΡΙΒΑΛΛΟΝΤΟΣ Α.Ε.
Είδος εκτελούμενου έργου: ΕΓΚΑΤΑΣΤΑΣΗ ΕΠΕΞΕΡΓΑΣΙΑΣ ΛΥΜΑΤΩΝ ΛΕΙΑΝΟΚΛΑΔΙΟΥ-ΥΠΑΤΗΣ

ΣΥΝΟΠΤΙΚΟΣ ΠΙΝΑΚΑΣ ΠΙΣΤΩΣΕΩΝ ΚΑΙ ΠΛΗΡΩΜΩΝ

ΠΡΟΥΠΟΛΟΓΙΣΜΟΣ (προ Φ.Π.Α.)		2.550.000,00	ΕΚΠΤΩΣΗ ΔΗΜΟΠΡΑΣΙΑΣ 7,906%		
ΕΓΚΡΙΣΕΙΣ		**Ευρώ**	**ΠΛΗΡΩΜΕΣ**		**Ευρώ**
Ποσό εγκριθέν αρχικά	Εργασίες	2.116.920,00	**Άθρ. των μέχρι σήμερα γενομ. Πληρωμών**	Εργασίες	2.156.449,46
	ΦΠΑ	486.891,60		ΦΠΑ	59.677,60
	Σύνολο	2.603.811,60		Σύνολο	2.216.127,06
Ομοίως για απρόβλεπτες δαπάνες	Εργασίες	190.522,80	**Ποσό πληρωτ. δυνάμει του παρ. λογ/σμού**	Εργασίες	0,00
	ΦΠΑ	43.820,24		ΦΠΑ	
	Σύνολο	234.343,04		Σύνολο	0,00
Αναθεωρήσεις	Εργασίες	44.482,40	**Άθροισμα πληρωμών**	Εργασίες	2.156.449,46
	ΦΠΑ	10.230,95		ΦΠΑ	59.677,60
	Σύνολο	54.713,35		Σύνολο	2.216.127,06
Άθροισμα αρχικής εγκρίσεως	Εργασίες	2.351.925,20	**Κρατήσεις με ΦΠΑ**		0,00
	ΦΠΑ	540.942,80	**Άθροισμα εκτελεσθεισών εργασιών με ΦΠΑ**		2.216.127,06
	Σύνολο	2.892.868,00			
Ποσά εγκριθέντα Συμπληρωματικώς	Εργασίες	0,00			
	ΦΠΑ	0,00			
	Σύνολο	0,00			
Άθροισμα εγκρίσεων	Εργασίες	2.351.925,20			
	ΦΠΑ	540.942,80			
	Σύνολο	2.892.868,00			
Εργασίες εκτελεσθ. μέχρι σήμερα και πληρ. διά του παρόντος Λογ/σμού με ΦΠΑ		2.216.127,06			
Υπόλοιπο εγκρίσεων		676.740,94			

Οι υπογράφοντες μηχανικοί της Τεχνικής Υπηρεσίας της Δ.Ε.Υ.Α. Λαμίας
Γρηγόριος Αποστολόπουλος, Δημήτριος Αντωνίου και Μαρία Λεπίδα, έχοντας υπόψη την με αριθμό 80/2013 απόφαση του Δ.Σ. της Δ.Ε.Υ.Α.Λ., με την οποία εγκρίθηκε η εκτέλεση των στην επικεφαλίδα εργασιών, με βάση την υπ' αριθμόν 38/2012 μελέτη της Δ.Ε.Υ.Α.Λ., που νόμιμα εγκρίθηκαν και κατακυρώθηκαν ύστερα από διεξαχθέντα τακτικό μειοδοτικό διαγωνισμό στο όνομα της
ΚΑΡΚΑΝΙΑΣ ΤΕΧΝΟΛΟΓΙΑ ΠΕΡΙΒΑΛΛΟΝΤΟΣ Α.Ε.
με την υπ' αριθμόν 18/2014 απόφαση του Δ.Σ. της Δ.Ε.Υ.Α.Λ.
και με βάση αυτής συνταχθείσας από 13.3.2014 Σύμβασης Εκτέλεσης Έργου του Προέδρου του Δ.Σ. της Δ.Ε.Υ.Α.Λ. Κοτρωνιά Γεωργίου μετά του αναδόχου ΚΑΡΚΑΝΙΑΣ ΤΕΧΝΟΛΟΓΙΑ ΠΕΡΙΒΑΛΛΟΝΤΟΣ Α.Ε.
και, τέλος, την από / / επιμέτρηση εκτελεσθεισών εργασιών.
Πιστοποιούν ότι μπορεί να πληρωθεί σύμφωνα με τον όπισθεν λογαριασμό στον ανάδοχο το ποσό των €:
Προ ΦΠΑ: Μηδέν # 0,00 #

Λαμία 13/12/2017

ΚΡΑΤΗΣΕΙΣ	Ευρώ
Υπέρ ΤΣΜΕΔΕ 0,2%	0,00
Χαρτόσημο 2,4%	0,00
Υπέρ ΦΕ 3%	0,00
Σύνολο κρατήσεων	0,00

Γρηγ. Αποστολόπουλος Χημικός Μηχ/κός
Δ. Αντωνίου Ηλ/γος-Μηχ/γος Μηχ/κός

13/12/2017 0,00 €
Ο Διευθυντής Δ.Ε.Υ.Α.Λ.
Θεοδωράκόπουλος Λιάννης

Λαμία 13/12/17
Ο Προϊστάμενος Τ.Υ.
Διονύσιος Παναγιωτόπουλος
Πολιτικός Μηχανικός

GEORGIOS KARKANIAS
PRESIDENT

03/12/18

Form EXP – 2(c): Specific Construction Experience

Contract of Similar Size and Nature			
Contract 487/6.12.2006	Contract Identification	"Biological Treatment Plant of the Agia Municipality"	
Award Date	6.12.2006	Completion Date	29.04.2014
Role in Contract	✓ Contractor	Management Contractor	Subcontractor
Total Contract Amount	2.613.010,17 EURO		
If partner in a JVCA or subcontractor, specify participation of total contract amount	Percent of Total 70%	Amount 1.829.107,12 EURO	
Employer's Name Address Telephone/Fax Number E-mail	DEYA (Public Utility of Water Supply and Sewage) of Agia Agia , 40003, – Greece Tel. +30 24940 24188 Fax: +30 24940 24288 E-mail: info@deya-agias.gr		
Description of the similarity in accordance with criteria due to table 2.4.,Clause 2.4.2 of Tenderers Qualifications			
	See attachement (execution certificate of the project with the reference of the final cost of the project)		

GEORGIOS KARKANIAS
PRESIDENT

03/12/18

OFFICIAL TRANSLATION FROM THE GREEK LANGUAGE

(national emblem)
HELLENIC REPUBLIC
REGION OF THESSALY
PREFECTURE OF LARISSA
D.E.Y.A. (Public Utility of Water Supply and Sewage)
OF AGIA

Agia, 24-08-2016
File No: 598

Address: Agia, 400 03, Greece
Information: Mr. Alexios Bouzoukis
Tel.: +30 2494024188
FAX: +30 2494024288

CERTIFICATE OF PROJECT'S EXECUTION

It is hereby certified that the Project entitled: "Biological Treatment Plant of the Agia Municipality" was executed by the Contractor with the name "J/V KARKANIAS ENVIRONMENTAL TECHNOLOGY S.A. – LATOMEIA TYRNAVOU S.A[1]" by virtue of the following contract and the Legislation in force.

The aforementioned Project was carried out based on the "design – construction" system, and it consisted of drafting the implementation design, the construction and the testing period of the wastewater treatment plant of Agia.

The Project was finally delivered on 29/04/2014 within the deadlines and prolongations approved by the Management Board pursuant to the Legislation in force.

The works were executed in compliance with the bidding documentation and they already operate in a satisfactory manner.

TECHNICAL DESCRIPTION OF THE WASTEWATER TREATMENT PLANT

According to the technical description included in the bidding documentation, which formed the basis for the works' design, the total capacity of the wastewater treatment plant is the following:

▪ Population equivalent	9.750 residents
▪ Average Wastewater flow	1.800 m^3/d
▪ Sewage inlet	100m^3/d
▪ Maximum total flow	2.572 m^3/d
Inlet pollutant loads	
▪ Organic Loading BOD_5	585kg/d
▪ Suspended solids	630kg/d
▪ Total Nitrogen	94kg/d
▪ Total Phosphorus	29kg/d

[1] (Translator's Note): Inofficial English Translation of LATOMEIA TYRNAVOU S.A.: Tyrnavos Quarries S.A.

GEORGIOS KARKANIAS
PRESIDENT

03/12/18

OFFICIAL TRANSLATION FROM THE GREEK LANGUAGE

Brief description of the treatment plant which consists of the following units:

a. Inlet manhole – Pumping station for the initial lifting – Sewage reception and pre-treatment

b. Pre-treatment unit

c. Biological treatment unit

Distribution manhole to the bioreactors

Bioselection – Dephosphorization tanks

Anoxic zone tanks

Aeration tanks

Recirculation of mixed fluid (internal recirculation)

d. Final sedimentation tanks

e. Filtration unit

f. Disinfection unit – Post-aeration – Outlet manhole

g. Sludge treatment

h. Leachate pumping station

i. Temporary storing tank (of untreated or semi treated sewage)

j. Buildings hosting the units

The final cost of the Project amounted to 2.613.010, 17 € including VAT.
This certificate is delivered upon request of KARKANIAS ENVIRONMENTAL TECHNOLOGY S.A. as an evidence of the Company's experience. for all legal intents and purposes.

THE DIRECTOR OF D.E.Y.A.A [Public Utility of Water Supply and Sewage of Agia]

(signature and official stamp)

ALEXIOS BOUZOUKIS

****

I, the undersigned certified translator, do hereby certify that the foregoing is a true translation of the attached Greek document, pursuant to Presidential Decree No.169/17.6.2002.

Larissa, 26/08/16

KONSTANTINA MICHAILAKI
Certified Translator
Ionian University Graduate
1, Marmon Ampa str. Gr - 412 22
Larissa - Tel. +30 2410 549998
Tax ID 066330544

Decision No 121/05
Corfu Court of First Instance

GEORGIOS KARKANIAS
PRESIDENT

03/12/18

ΕΛΛΗΝΙΚΗ ΔΗΜΟΚΡΑΤΙΑ
ΠΕΡΙΦΕΡΕΙΑ ΘΕΣΣΑΛΙΑΣ
ΝΟΜΟΣ ΛΑΡΙΣΑΣ
ΔΕΥΑ ΑΓΙΑΣ
Ταχ.Διεύθυνση:Αγιά.400 03
Πληρ.: κ. Αλέξιος Μπουζούκης
Τηλέφωνο:2494024188
FAX: 2494024288

Αγιά 24-08-2016
Αρ. Πρωτ : 598

ΒΕΒΑΙΩΣΗ ΕΚΤΕΛΕΣΗΣ ΕΡΓΟΥ

Βεβαιώνεται ότι το έργο Βιολογικός Καθαρισμός Δήμου Αγιάς» εκτελέστηκε με ανάδοχο την Κ/Ξ ΚΑΡΚΑΝΙΑΣ ΤΕΧΝΟΛΟΓΙΑ ΠΕΡΙΒΑΛΛΟΝΤΟΣ Α.Ε.- ΛΑΤΟΜΕΙΑ ΤΥΡΝΑΒΟΥ Α.Ε., σύμφωνα με τη σύμβαση και την κείμενη νομοθεσία.
Τα προαναφερόμενο έργο, που εκτελέστηκε με το σύστημα «μελέτη - κατασκευή» περιελάμβανε την σύνταξη μελέτης εφαρμογής καθώς και την κατασκευή και δοκιμαστική λειτουργία της Ε.Ε.Λ. Αγιάς.

Το έργο, παραδόθηκε οριστικά στις 29/04/2014, εντός των προθεσμιών και των παρατάσεων που εγκρίθηκαν από το Δ.Σ. σύμφωνα με την κείμενη νομοθεσία.

Η κατασκευή των έργων ήταν σύμφωνη με τα συμβατικά τεύχη και ήδη τα έργα αυτά λειτουργούν ικανοποιητικά.

ΤΕΧΝΙΚΑ ΧΑΡΑΚΤΗΡΙΣΤΙΚΑ Ε.Ε.Λ.

Η δυναμικότητα της Ε.Ε.Λ. σύμφωνα με την τεχνική περιγραφή των τευχών δημοπράτησης των έργων επέκτασης, βάσει της οποίας έγινε ο σχεδιασμός των έργων αυτών, είναι η εξής :

- Ισοδύναμος πληθυσμός	9.750 I.K.
- Μέση παροχή λυμάτων	1.800 m^3/d
- Είσοδος βοθρολυμάτων	100 m^3/d
- Συνολική μέγιστη παροχή σχεδιασμού	2.572 m^3/d

Ρυπαντικά φορτία εισροής

- Οργανικό φορτίο BOD_5	585kg/d
- Αιωρούμενα στερεά	630kg/d
- Ολικό άζωτο	94kg/d
- Ολικός φώσφορος	29kg/d

GEORGIOS KARKANIAS
PRESIDENT

26 09 16 06:41a ΔΕΥΑ Αγιάς 2494024288 σελ.1

03/12/18

Συνοπτικά η εγκατάσταση επεξεργασίας αποτελείται από τις παρακάτω μονάδες:

α. Φρεάτιο εισόδου εγκατάστασης – Αντλιοστάσιο αρχικής ανύψωσης – Υποδοχή και προεπεξεργασία βοθρολυμάτων

β. Μονάδα προεπεξεργασίας

γ. Μονάδα βιολογικής επεξεργασίας

Φρεάτιο διανομής προς τους βιολογικούς αντιδραστήρες

Δεξαμενές βιοεπιλογής - αποσωσφόρωσης

Δεξαμενές ανοξικής ζώνης

Δεξαμενές αερισμού

Ανακυκλοφορία ανάμικτου υγρού (εσωτερική ανακυκλοφορία)

δ. Δεξαμενές τελικής καθίζησης

ε. Μονάδα διύλισης

στ. Μονάδα απολύμανσης – Μεταερισμός – Φρεάτιο εξόδου

ζ. Επεξεργασία λάσπης

η. Αντλιοστάσιο στραγγιδίων

θ. Δεξαμενή προσωρινής αποθήκευσης (ανεπεξέργαστων ή ημιεπεξεργασμένων)

ι. Κτίρια στέγασης των μονάδων

Η τελική δαπάνη του έργου ανήλθε στο ποσό των 2.613.010,17 ευρώ με το Φ.Π.Α.

Η παρούσα χορηγείται μετά από αίτηση της εταιρείας ΚΑΡΚΑΝΙΑΣ ΤΕΧΝΟΛΟΓΙΑ ΠΕΡΙΒΑΛΛΟΝΤΟΣ Α.Ε., για να χρησιμοποιηθεί ως στοιχείο εμπειρίας, όπου απαιτηθεί.

Ο ΔΙΕΥΘΥΝΤΗΣ ΤΗΣ ΔΕΥΑΑ

ΜΠΟΥΖΟΥΚΗΣ ΑΛΕΞΙΟΣ

GEORGIOS KARKANIAS
PRESIDENT

26 08 16 06:41a Δευα Αγιαζ 2494024288 σελ.2

03/12/18

DANILOVGRAD MUNICIPAL INFRASTRUCTURE
CONSTRUCTION OF WASTEWATER PLANT

KARKANIAS
ENVIRONMENTAL TECHNOLOGIES S.A.

Specific Construction Experience- SUMMARY

Contract of Similar Size and Nature
"Extension of the Wastewater Treatment Plant of Lamia"
"Wastewater Treatment Plant of Lianokladi- Ypati"
"Biological Treatment Plant of the Agia Municipality"

GEORGIOS KARKANIAS
PRESIDENT

03/12/18

DANILOVGRAD MUNICIPAL INFRASTRUCTURE
CONSTRUCTION OF WASTEWATER PLANT

KARKANIAS
ENVIRONMENTAL TECHNOLOGY S.A.

Specific Construction Experience- SUMMARY

Contract of Similar Size and Nature
"Extension of the Wastewater Treatment Plant of Lamia"
"Wastewater Treatment Plant of Lianokladi- Ypati"
"Biological Treatment Plant of the Agia Municipality"

GEORGIOS KARKANIAS
PRESIDENT

03/12/18

Tender

Attachment 3– Conformity of the Facilities

Please find Technical Offer/ Proposal in Folders II and III.

GEORGIOS KARKANIAS
PRESIDENT

03/12/18

KARKANIAS
ENVIRONMENTAL TECHNOLOGY S.A.

Suppliers list

Description	Supplier
Mechanical equipment	
penstocks	KARKANIAS SA
overflow penstocks	KARKANIAS SA
gravel traps	KARKANIAS SA
lifting devices	KARKANIAS SA
scum diaphragm	KARKANIAS SA
overflow weir	KARKANIAS SA
ultrasonic flow meter	SIEMENS
electromagnetic inductive flow meter	SIEMENS
ultrasonic level meter	SIEMENS
ultrasonic differential level meter	SIEMENS
frequency converters (inverters)	SIEMENS
conductivity meter	B&C Electronics
pH and temperature meter	B&C Electronics
automatic station for receiving samples	HACH
dissolved oxygen meter	HACH
MLSS meter	HACH
containers	VAN
screenings container chassis with electric drive	KARKANIAS SA
automatic cleaned fine screen for septage	SEFT
automatic cleaned coarse screen (multi rake)	KARKANIAS SA
manual cleaned coarse screen	KARKANIAS SA
screw conveyors	KARKANIAS SA
submersible mixers	WILO
submersible mixers (low speed)	XYLEM
mixer (vertical shaft)	KARKANIAS SA
submersible pumps	WILO
submersible jet aerator	WILO
compact mechanical pretreatment unit	SEFT
progressing cavity (screw) pumps	NOV PROCESS (MONO PUMPS)
centrifuge (decanter)	ALFA LAVAL
automatic preparation device for polyelectrolyte	KARKANIAS SA
overflow weir	KARKANIAS SA
overflow telescopic valve	KARKANIAS SA
rotary lobe blowers	ROBUSCHI
fine bubble membrane diffusers	XYLEM / SANITAIRE
fans	Soler & Palau (S&P)
air pipes	KARKANIAS SA
rotated radial bridge with bottom and surface scrapers	KARKANIAS SA
scum skimmer	KARKANIAS SA
influent well	KARKANIAS SA
circumferential overflow weir	KARKANIAS SA

GEORGIOS KARKANIAS
PRESIDENT

03/12/18

Description	Supplier
circumferential scum diaphragm	KARKANIAS SA
dosing (diaphragm) pumps	GRUNDFOS
pumps (magnetic driven, plastic, centrifugal) for chemical solution	MPumps
automatic cleaned microscreen rotary drum filter	IN EKO Team sro
UV disinfection automatic cleaned system	ULTRAQUA
automatic pressure station	MARCO PUMPS /EBARA
knife gate valve	VAG
gate valve	GEMAK
Electrical Equipment	
Medium Voltage Switchboard	GERO S.A.
Transformer	ABB
Low Voltage Main Distribution Switchboard	GERO S.A.
Power Distribution Switchboards (PDC)	GERO S.A.
Backup Power Supply Unit	KAPELOS DIESELS S.A.
Printer A4	Samsung
Printer A3+	Epson
UPS	Delta Electronics
Servers	HP
SCADA	SIEMENS
PLC	SIEMENS

GEORGIOS KARKANIAS
PRESIDENT

02/12/18

SIEMENS

Siemens A.E. , 151 23 Amarousio, Greece

To:

D.O.O. "Vodovod i kanalizacija"
Danilovgrad
Caja Scepanovica bb,
81410, Danilovgrad, State of Montenegro

Name Konstantinos Passalidis
Division DF, PD
Sector I S N

Tel. 2310-479212
Fax 2310-479295

E-Mail konstantinos.passalidis@siemens.com
Internet www.siemens.gr

Date 8.09.2017

RE: Manufacturer's Authorisation Form

Whereas "Siemens Electrotechnical Projects and Products", (hereinafter "Siemens Greece") who are exclusive representatives of Siemens Aktiengesellschaft, in the framework of the participation of the company "KARKANIAS ENVIRONMENTAL TECHNOLOGY S.A." (industrial area of Larissa Greece) in the tender of WWTP Danilovgrad, declare that:

- "KARKANIAS ENVIRONMENTAL TECHNOLOGY S.A." is a business partner of "Siemens Greece" and they have been using in their projects Industrial Automation components (PLCs, HMI), Software, Instrumentation, Drives and Low Voltage components manufactured by "Siemens AG".
- "Siemens Greece" will cooperate (in the framework of their agreement) with "KARKANIAS ENVIRONMENTAL TECHNOLOGY S.A." and procure PLCs, Software, Instrumentation and Drives (Inverters), in the case of "KARKANIAS ENVIRONMENTAL TECHNOLOGY S.A." is awarded with the contract of WWTP Danilovgrad.
- "Siemens Greece" will offer the valid warranty for the respective Siemens products offered by "KARKANIAS ENVIRONMENTAL TECHNOLOGY S.A."
- The offered by "KARKANIAS ENVIRONMENTAL TECHNOLOGY S.A." Siemens products are manufactured at the following Siemens plants

GEORGIOS KARKANIAS
PRESIDENT

03/12/18

SIEMENS

Date 8.09.2017
to D.O.O. "Vodovod i kanalizacija"

	Description of product	Manufacturer	Address of manufacturing unit
1	PLC Simatic	SIEMENS AG	Werner-von-Siemens-Str. 50 D-92224 Amberg (Germany)
2	Sitrans F flowmeters	Siemens S.A.S. PD PA MF-H	1, Chemin de la Sandlach, 67500 Haguenau (France)
3	Sitrans L level meters	Siemens Milltronics Process Instruments Inc	1954 Technology Drive P.O. Box 4225 Peterborough Ontario K9J 7B1 (Canada)
4	Drives (inverters) Sinamics	Siemens AG	Frauenauracher Str. 80, 91056 Erlangen, (Germany) & Varey Road Congleton Cheshire CW12 1PH (Great Britain)
5	SCADA (Simatic WinCC TIA Portal)	SIEMENS AG	Gleiwitzer Straße 555 90475 Nürnberg (Germany)

With compliments

Ioannis Livanos

Konstantinos Passalidis

GEORGIOS KARKANIAS PRESIDENT

03/12/18

SIEMENS

Vertreterbestätigung

Hiermit wird bestätigt, dass die Firma

Siemens A.E.
Elektrotechnische Projekte und Erzeugnisse
6-8 Agisilaou Str., Amaroussio
151 23 Athen
Griechenland

für alle unsere Aktivitäten die Alleinvertretung in der **Hellenischen Republik** übernommen hat und somit unsere Interessen wahrnimmt.

In dieser Eigenschaft ist **Siemens A.E.** berechtigt, an Ausschreibungen teilzunehmen und Unterlagen hierfür von öffentlichen Stellen oder privaten Kunden in der **Hellenischen Republik** entgegenzunehmen bzw. entsprechende Angebote abzugeben.

Der Abschluss von Verträgen und Vereinbarungen im Namen der Siemens Aktiengesellschaft oder Handlungen, die uns finanziell oder in anderer Weise verpflichten, bedürfen der vorherigen schriftlichen Einwilligung der Siemens Aktiengesellschaft. Insbesondere gilt diese Vollmacht nicht für Geschäftsvorgänge die die Siemens Aktiengesellschaft für Liefer- und Leistungsverträge bindet.

Diese Autorisation gilt, vorbehaltlich der Regelungen des Vertriebs- und Vertretungsvertrages zwischen Siemens A.E und Siemens Aktiengesellschaft vom 7. Dezember 2012 sowie aller zugehörigen Änderungen und Ergänzungen, bis **31. Dezember 2017,** es sei denn, sie wird vorher widerrufen.

München, 6.Oktober 2015

Siemens Aktiengesellschaft

Stefan Werner

i.V.
Stefan Knaus

GEORGIOS KARKANTAS
PRESIDENT

03/12/18

URNr. L 2088 2015

Notarielle Beglaubigung

Ich, die unterzeichnete Notarin Dr. Helene Ludewig in München, beglaubige hiermit die Echtheit der vorstehenden, vor mir vollzogenen Unterschriften von

1. Herrn Stefan **Werner**, geboren am 23. März 1956,
   mir persönlich bekannt,
2. Herrn Stefan **Knaus**, geboren am 20. April 1963,
   ausgewiesen durch amtlichen Lichtbildausweis,

beide geschäftsansässig Wittelsbacherplatz 2, 80333 München,

und beide hier handelnd für die

Siemens Aktiengesellschaft mit dem Sitz in Berlin und München

eingetragen im Handelsregister des Amtsgericht München unter HRB 6684.

München, den 6. Oktober 2015

Dr. Helene Ludewig, Notarin

GEORGIOS KARAMITAS
PRESIDENT

03/12/18

APOSTILLE

(Convention de La Haye du 5 octobre 1961)

1. Land: Bundesrepublik Deutschland

Diese öffentliche Urkunde
2. ist unterschrieben von **Dr. Helene Ludewig**

3. in ihrer Eigenschaft als **Notarin**

4. Sie ist versehen mit dem Siegel der **Notarin Dr. Helene Ludewig in München**

Bestätigt

5. in München 6. am 7.Oktober 2015

7. durch den Präsidenten des Landgerichts München I

8. unter Nr. 910 a- 9709/2015

9. Siegel

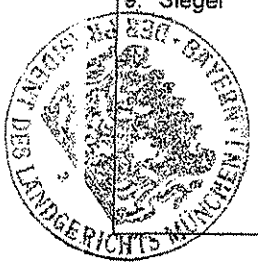

10. Unterschrift
Im Auftrag:

Christine Köppl
Justizverwaltungsinspektorin

GEORGIOS KARKAMAS
PRESIDENT

03/12/18

Manufacturer's Authorisation Form

Date: 6 September 2017

To: D.O.O. "Vodovod i kanalizacija" Danilovgrad
Caja Scepanovica bb,
81410, Danilovgrad, State of Montenegro

WHEREAS

B&C Electronics Srl, who are established and reputable manufacturers of on-line meters, having factories at Via per Villanova 3, Carnate 20866, Italy, do hereby authorise KARKANIAS ENVIRONMENTAL TECHNOLOGY S.A. in industrial area of Larissa, Greece, to submit a tender, and subsequently negotiate and sign the Contract with you for the above goods manufactured by us.

We hereby confirm that the warranty for the goods offered for supply by the above firm in response to this Invitation for Tenders is:

- 5 years on controllers and electronis, for manufacturing defects
- 3 months for electrochemical sensors and sensing elements, for manufacturing defects

Signed: _____

Name: Antonio Carzaniga

Title: President

B&C electronics S.r.l.
20866 CARNATE (MB) - Via per Villanova, 18
C.F. 02[illegible] - P. IVA 00729030965

GEORGIOS KARKANIAS
PRESIDENT

03/12/16

Manufacturer's Authorisation Form

Date: 06/09/2017

To: D.O.O. "Vodovod i kanalizacija" Danilovgrad
Caja Scepanovica bb,
81410, Danilovgrad, State of Montenegro

WHEREAS

Hach-Lange Monoprosopi EPE which is the official subsidiary of Hach in Greece, established and reputable manufacturers of on-line meters, having factories at

- Hach Lange GmbH, Koenigsweg 10, PC 14163, Berlin, Germany
- Hach, 5600 Lindbergh Drive, 80539 Loveland, Colorado, USA

do hereby authorise KARKANIAS ENVIRONMENTAL TECHNOLOGY S.A. in industrial area of Larissa, Greece, to submit a tender, and subsequently negotiate and sign the Contract with you for the above goods manufactured by us.

We hereby confirm our full guarantee and warranty for 2 years for the goods offered for supply by the above firm in response to this Invitation for Tenders.

Signed:

Name: Pliotas Giannis

Title: Sales Manager Hach Greece

This letter of authority should be on the letterhead of the Manufacturer and should be signed by a person competent and having the power of attorney to bind the Manufacturer. It should be included by the tenderer in its tender.

GEORGIOS KARKANIAS
PRESIDENT

03/12/18

Manufacturer's Authorisation Form

Date: 07/09/2017

To: D.O.O. "Vodovodikanalizacija" Danilovgrad
CajaScepanovica bb,
81410,Danilovgrad, State of Montenegro

WHEREAS

VAN s.a who are established and reputable manufacturers of containers, having factory at Industrial Area of Kilkis , do hereby authorise KARKANIAS ENVIRONMENTAL TECHNOLOGY S.A.in industrial area of Larissa, Greece, to submit a tender, and subsequently negotiate and sign the Contract with you for the above goods manufactured by us.

We hereby extend our full guarantee for 1(one) year ,for the goods offered for supply by the above firm in response to this Invitation for Tenders.

Signed:

Name: AMANATIDOU ELENI

Title: GENERAL .MANAGER

VAN (BAN) A.E.
ΤΕΧΝΙΚΗ ΕΜΠΟΡΙΚΗ & ΒΙΟΜΗΧΑΝΙΚΗ ΕΤΑΙΡΙΑ
ΚΑΤΑΣΚΕΥΩΝ & ΥΠΗΡΕΣΙΩΝ
ΕΔΡΑ: ΒΙ. ΠΕ. ΣΤΑΥΡΟΧΩΡΙΟΥ Ο.Τ. 6 - 61100 ΚΙΛΚΙΣ
ΤΗΛ.: 23410 71400 - 23410 71001, FAX: 23410 7155
ΑΜΑΕ: 35104/55/Β/96/10/007
ΑΦΜ 094450176 - ΔΟΥ ΚΙΛΚΙΣ - ΓΟΥΜΕΝΙΣΣΑΣ

This letter of authority should be on the letterhead of the Manufacturer and should be signed by a person competent and having the power of attorney to bind the Manufacturer. It should be included by the tenderer in its tender.

GEORGIOS KARKANIAS
PRESIDENT

03/12/18

Manufacturer's Authorisation Form

Date: 01/09/2017

To: D.O.O. "Vodovod i kanalizacija" Danilovgrad
Caja Scepanovica bb,
81410, Danilovgrad, State of Montenegro

WHEREAS

SEFT Srl who are established and reputable manufacturers of compact mechanical pretreatment unit, having factories at San Felice Sul Panaro, Modena Italy, do hereby authorise KARKANIAS ENVIRONMENTAL TECHNOLOGY S.A. in industrial area of Larissa, Greece, to submit a tender, and subsequently negotiate and sign the Contract with you for the above goods manufactured by us.

We hereby extend our full guarantee and warranty (24 months from shipping) as per Clause 23 of the General Conditions of Contract for the goods offered for supply by the above firm in response to this Invitation for Tenders.

SEFT S.r.l.

Signed: _____

Name: _____Paolo Barbieri_____

Title:_____CEO_____

This letter of authority should be on the letterhead of the Manufacturer and should be signed by a person competent and having the power of attorney to bind the Manufacturer. It should be included by the tenderer in its tender.

GEORGIOS KARKANIAS
PRESIDENT

03/12/18

Manufacturer's Authorisation Form

Date: 01/09/2017

To: D.O.O. "Vodovod i kanalizacija" Danilovgrad
Caja Scepanovica bb,
81410, Danilovgrad, State of Montenegro

WHEREAS

.....Wilo SE..... who are established and reputable manufacturers of submersible pumps, submersible mixers, jet aerators and spare parts and accessories, having factories at Wilo SE Werk Hof, Heimgartenstr. 1-3, D-95030 Hof do hereby authorise KARKANIAS ENVIRONMENTAL TECHNOLOGY S.A. in industrial area of Larissa, Greece, to submit a tender, and subsequently negotiate and sign the Contract with you for the above goods manufactured by us.

We hereby extend our full guarantee and warranty as per Clause 23 of the General Conditions of Contract for the goods offered for supply by the above firm in response to this Invitation for Tenders.

Signed: _____

Name: __Torsten Rosenberg_____

Title:_ Head of GCT Drainage & Sewage, Division Clean & Waste Water

This letter of authority should be on the letterhead of the Manufacturer and should be signed by a person competent and having the power of attorney to bind the Manufacturer. It should be included by the tenderer in its tender.

GEORGIOS KARKANIAS
PRESIDENT

03/12/18

Xylem Water Solutions Sweden AB

xylem
Let's Solve Water

Manufacturer's Authorisation Form

Date: 13/09/2017

To: D.O.O. "Vodovod i kanalizacija" Danilovgrad
Caja Scepanovica bb,
81410, Danilovgrad, State of Montenegro

WHEREAS

We Xylem Water Solutions Sweden AB, who are established and reputable manufacturers of submersible pumps, submersible mixers, jet aerators and spare parts and accessories, having factories at 361 80 EMMABODA, Sweden, do hereby authorise KARKANIAS ENVIRONMENTAL TECHNOLOGY S.A. in industrial area of Larissa, Greece, to submit a tender, and subsequently negotiate and sign the Contract with you for the above goods manufactured by us:

SR 4410.011 (2500mm) 2.3 kW/400 V__pieces 2

We hereby extend our full Xylem guarantee and warranty in accordance to Xylem EMEIA General Conditions for the sale and supply of products, with respect to the goods offered by the above firm in response to this invitation for Tenders.

Signed: _____

Name: Olivier Lamarie

Title: Managing Director, Austria & Eastern Europe Export

Xylem Water Solutions Sweden AB xylem SE-174 53 SUNDBYBERG

GEORGIOS KARKANIAS PRESIDENT

03/12/18

September 6, 2017

To: D.O.O. "Vodovod i kanalizacija" Danilovgrad
Caja Scepanovica bb,
81410, Danilovgrad, State of Montenegro

WHEREAS

NOV Process And Flow Technologies UK Ltd who are established and reputable manufacturers of progressing cavity pumps (screw pumps) having factories at Greengate, Middleton, Manchester, England, M24 1SA do hereby authorise KARKANIAS ENVIRONMENTAL TECHNOLOGY S.A. in industrial area of Larissa, Greece, to submit a tender, and subsequently negotiate and sign the Contract with you for the above goods manufactured by us.

We hereby extend our full guarantee and warranty as per Conditions of Sale: NOV Process & Flow Technologies UK Ltd (2016) for the goods offered for supply by the above firm in response to this Invitation for Tenders.

Signed: M Deluce

Name: Marc Deluce

Title: Area Manager – Export Sales

T +44 (0)161 359 8000
E info.mono@nov.com
nov.com/PFT

NOV Process & Flow Technologies UK Limited
Greengate, Middleton, Manchester
England, M24 1SA

Registered in England No. 200721
Registered Office:
Stonedale Road, Oldends Lane Industrial Estate
Stonehouse, Gloucestershire, GL10 3RQ

GEORGIOS KARKANIAS
PRESIDENT

03/12/18

Date: 01/09/2017

To: D.O.O. "Vodovod i kanalizacija" Danilovgrad
Caja Scepanovica bb,
81410, Danilovgrad, State of Montenegro

Alfa Laval AEBE
20th Km Lavrion Avenue
Thesis Karella
194 00 Koropi
Greece
Tel: +30 210 66 83 500
Fax: +30 210 66 43 960
www.alfalaval.gr

Manufacturer's Authorisation Form

WHEREAS

Alfa Laval who are established and reputable manufacturers of centrifuge (decanter), having factories at Maskinvej 3-5, 2860 Soborg, Denmark, Mumbai – Pune Road, Dapodi, Pune 411012 India, do hereby authorize KARKANIAS ENVIRONMENTAL TECHNOLOGY S.A. in industrial area of Larissa, Greece, to submit a tender, and subsequently negotiate and sign the Contract with you for the above goods manufactured by us.

We hereby extend our full guarantee and warranty as per Clause 23 of the General Conditions of Contract for the goods offered for supply by the above firm in response to this Invitation for Tenders.

Signed:

Name: George Asteris

Title: Greece Regional Sales Manager

ALFA LAVAL AEBE
20TH KM. LAVRION AVE.
THESIS KARELLA
GR - 19400 KOROPI
ATTICA - GREECE
VAT. No: EL 094281376

GEORGIOS KARKANIAS
PRESIDENT

Α.Φ.Μ.: 094281376
Δ.Ο.Υ.: Φ.Α.Ε.Ε. Αθηνών

03/12/18

ROBUSCHI

Manufacturer's Authorization Form

Date: 11/09/2017

To: D.O.O. "Vodovod i kanalizacija" Danilovgrad
Caja Scepanovica bb,
81410, Danilovgrad, State of Montenegro

WHEREAS

Gardner Denver S.r.l – Divisione ROBUSCHI who are established and reputable manufacturers of positive displacement blowers, having factories at Parma, Via S. Leonardo, 71/A - 43122, Italia do hereby authorizes KARKANIAS ENVIRONMENTAL TECHNOLOGY S.A. in industrial area of Larissa, Greece, to submit a tender, and subsequently negotiate and sign the Contract with you for the above goods manufactured by us.

Signed: _____

Name: CHRIS CAMPBELL

Title : LEGAL REPRESENTATIVE

GEORGIOS KARKANIAS
PRESIDENT

SEDE AMMINISTRATIVA/OPERATIVA
43122 Parma (Italy)
Via S. Leonardo, 71/A
Tel. +39 0521 274911-91
Fax +39 0521 771242

FILIALE DI MILANO
20032 Cormano (Milano)
Via Brodolini, 17
Tel. +39 02 51628055
Fax +39 02 51620224

FILIALE DI PADOVA
35129 Padova
Piazza Zanellato, 5
Tel. +39 049 8078260
Fax +39 049 8078183

info@robuschi.com - finance.pec@legalmail.it - www.robuschi.com

GARDNER DENVER S.r.l. - Divisione ROBUSCHI
Sede legale: Via G. Brodolini, 17 - 20032 Cormano (MI)-Italia - tel +39 02 6145121 fax +39 02 66503399
Capitale sociale € 218.400 i.v. - C.F. e P.IVA 01320020125 - Registro imprese Milano (REA) 1949824
Società soggetta alla attività di direzione e coordinamento di Gardner Denver, Inc

03/12/18

Xylem Water Solutions Sweden AB

xylem
Let's Solve Water

Manufacturer's Authorisation Form

Date: 12/09/2017

To: D.O.O. "Vodovod i kanalizacija" Danilovgrad
Caja Scepanovica bb,
81410, Danilovgrad, State of Montenegro

WHEREAS

We Xylem Water Solutions Sweden AB, who are official sales company of Sanitaire branded products, aeration systems (diffusers, aeration pipes, etc), produced by Xylem, a reputable manufacturer having factories at 361 80 EMMABODA, Sweden do hereby authorise KARKANIAS ENVIRONMENTAL TECHNOLOGY S.A. based in industrial area of Larissa, Greece, to submit a tender, and subsequently negotiate and sign the Contract with you for the following goods manufactured by us:

Sanitaire 9" Silver Series II (2802) _192 pieces

We hereby extend our full Xylem guarantee and warranty in accordance to Xylem EMEIA General Conditions for the sale and supply of products, with respect to the goods offered by the above firm in response to this Invitation for Tenders.

Signed: _____

Name: Olivier Lamarie

Title: Managing Director, Austria & Eastern Europe Export

Xylem Water Solutions Sweden AB xylem SE-174 53 SUNDBYBERG

GEORGIOS KARKANIAS
PRESIDENT

03/12/18

TO WHOM IT MAY CONCERN

GRUNDFOS ΕΛΛΑΣ Α.Ε.Β.Ε.
ΕΔΡΑ
20° χλμ. Λεωφ. Μαρκοπούλου
Ταχ. Θυρίδα 71
190 02 Παιανία Αττικής

Τηλ. : 210 66 83 400
Fax. : 210 66 46 273

Τράπεζες :
Citibank N.A. (Αθήνα)
Alpha Τράπεζα (Κορωπί)
E.T.E. (Κορωπί)

Παιανία :
Σημείο σας :
Σημείο μας :

Comprehensive and global 2-year warranty included in pump sales price.

All Grundfos products come with a 2-year warranty that fully complies with legal requirements.

The warranty covers product and material defects which are not the results of normal wear and tear for a period of 24 months from the date of delivery. The warranty period may not, however, exceed 30 months from the date of production.

Warranty claims will be rejected in the following situations:

- If the defect in the product arises from:
  - any drawing, design or specification supplied by the customer/purchaser
  - modifications undertaken by the customer/purchaser or athird party without the consent of Grundfos
- If a defect is caused by:
  - normal wear and tear
  - inadequate maintenance or faulty repair by others than Grundfos
  - failure to observe the operating instructions
  - over-loading
  - use of any unsuitable material
  - the effects of chemical or electrolytic action
  - building or assembly work not undertaken by Grundfos
  - other reasons beyond Grundfos' control.

As a general rule, Grundfos will not accept to pay transportation/replacement/installation costs for faulty products.

Warranty claims may be submitted by contacting the local Grundfos sales company or the point of sale.

Benefit:

- Knowledge that Grundfos backs its products with clearly defined warranty terms
- Warranty claims with well-defined contacts and short response time.

http://www.grundfos.com/service-support/support-contact/warranty.html

GEORGIOS KARKANIAS
PRESIDENT

03/12/18

Manufacturer's Authorisation Form

Date: 6.9.2017

To: D.O.O. "Vodovod i kanalizacija" Danilovgrad
Caja Scepanovica bb,
81410, Danilovgrad, State of Montenegro

WHEREAS

IN-EKO TEAM, s.r.o., who are established and reputable manufacturers of rotary drum filter, having factories at Trnec 1734, 66603 Tišnov, Czech Republic, do hereby authorise KARKANIAS ENVIRONMENTAL TECHNOLOGY S.A. in industrial area of Larissa, Greece, to submit a tender, and subsequently negotiate and sign the Contract with you for the above goods manufactured by us.

We hereby extend our full guarantee and warranty as 2 years for the goods offered for supply by the above firm in response to this Invitation for Tenders.

IN-EKO

Signed: _____

Name: Aleš Vaverka

Title: Head of Sales department

This letter of authority should be on the letterhead of the Manufacturer and should be signed by a person competent and having the power of attorney to bind the Manufacturer. It should be included by the tenderer in its tender.

GEORGIOS KARKANIAS
PRESIDENT

03/12/18

Manufacturer's Authorisation Form

Date: 31 / 8 / 17

To: D.O.O. "Vodovod i kanalizacija" Danilovgrad
Caja Scepanovica bb,
81410, Danilovgrad, State of Montenegro

WHEREAS

ULTRAQUA AS who are established and reputable manufacturers of UV disinfection system, having factories at 9220 AALBORG ØST - DENMARK, do hereby authorise KARKANIAS ENVIRONMENTAL TECHNOLOGY S.A. in industrial area of Larissa, Greece, to submit a tender, and subsequently negotiate and sign the Contract with you for the above goods manufactured by us.

We hereby extend our full guarantee and warranty as per Clause 23 (max. 24 months from delivery) of the General Conditions of Contract for the goods offered for supply by the above firm in response to this Invitation for Tenders.

ULTRAQUA

Signed: _____

Name: _____

Title: _____

This letter of authority should be on the letterhead of the Manufacturer and should be signed by a person competent and having the power of attorney to bind the Manufacturer. It should be included by the tenderer in its tender.

GEORGIOS KARKANIAS
PRESIDENT

03/12/18

Manufacturer's Authorisation Form

Date: 08/09/2017

To: D.O.O. "Vodovod i kanalizacija" Danilovgrad
Caja Scepanovica bb,
81410, Danilovgrad, State of Montenegro

WHEREAS

P. MARCOMICHALIS & SON SA (MARCO PUMPS) who are established and reputable manufacturers of automatic pressure station for service water, having factories at [Ave. Athinon-Pireos, 97 – Piraeus Greece] do hereby authorise KARKANIAS ENVIRONMENTAL TECHNOLOGY S.A. in industrial area of Larissa, Greece, to submit a tender, and subsequently negotiate and sign the Contract with you for the above goods manufactured by us.

Signed:

MARCO PUMPS-ΜΑΡΚΟ ΠΑΜΠΣ
Π. ΜΑΡΚΟΜΙΧΑΛΗΣ & ΥΙΟΣ Α.Ε.Β.Ε
ΑΝΤΛΙΕΣ-ΠΙΕΣΤΙΚΑ-ΠΥΡΟΣΒΕΣΤΙΚΑ
ΥΠΟΚΑΤΑΣΤΗΜΑ ΘΕΣΣΑΛΟΝΙΚΗΣ
ΒΙ.ΠΕ. ΣΙΝΔΟΥ - ΟΤ 50 - Τ.Κ. 570 22 Τ.Θ. 1367
ΤΗΛ. 2310 [illegible], 548561-FAX: 2310-582947
Α.Φ.Μ. 094155102 Δ.Ο.Υ. ΦΑΕ ΠΕΡΑΙΑ
Α.Μ.Α. [illegible]

Name: JOHN STEFANIDIS

Title: BRANCH OFFICE MANAGER

This letter of authority should be on the letterhead of the Manufacturer and should be signed by a person competent and having the power of attorney to bind the Manufacturer. It should be included by the tenderer in its tender.

GEORGIOS KARKANIAS
PRESIDENT

03/12/18

GERO S.A.
ELECTRICAL WHOLESALE
LIGHTING

Date: 12 September 2017

To: D.O.O. "Vodovodikanalizacija" Danilovgrad
CajaScepanovica bb,
81410, Danilovgrad, State of Montenegro

Manufacturer's Authorisation Form

Whereas

GERO S.A. who are established and reputable manufacturers of **Electrical Panels (Medium & Low Voltage) and Substations** having factories at **Larissa, Greece** do hereby authorise KARKANIAS ENVIRONMENTAL TECHNOLOGY S.A. based in industrial area of Larissa, Greece, to submit a tender, and subsequently negotiate and sign the Contract with you for the above goods manufactured by us.

We hereby extend our full guarantee and warranty for two years for the goods offered for supply by the above firm in response to this Invitation for Tenders.

ΓΚΕΡΟ Α.Ε.
ΗΛΕΚΤΡΟΛΟΓΙΚΟΣ ΕΞΟΠΛΙΣΜΟΣ
ΚΕΝΤΡΙΚΟ: ΑΝΤ. ΜΑΡΤΑΛΗ 1 - ΛΑΡΙΣΑ
ΤΗΛ. 2410 579985 - FAX: 2410 579986
Α.Φ.Μ. 998224004 - Β' ΔΟΥ ΛΑΡΙΣΑΣ
Α.Μ.Α.Ε. 70740/33/Β/11/06

Signed: _____

Name: Mr. Georgios Karkanias

Title: CEO

GEORGIOS KARKANIAS
PRESIDENT

03/12/18

Manufacturer's Authorisation Form

Date: 13/11/2018

To: D.O.O. "Vodovod i kanalizacija" Danilovgrad
Caja Scepanovica bb,
81410, Danilovgrad, State of Montenegro

WHEREAS

KAPELOS DIESELS S.A. who are established and reputable manufacturers of **Generators** having factories at **Aspropyrgos-Athens, Greece** do hereby authorise KARKANIAS ENVIRONMENTAL TECHNOLOGY S.A. in industrial area of Larissa, Greece, to submit a tender, and subsequently negotiate and sign the Contract with you for the above goods manufactured by us.

We hereby extend our full guarantee and warranty for two years for the goods offered for supply by the above firm in response to this Invitation for Tenders.

Signed: _____

Name: Spyros Kapelos

Title: CEO

ΚΑΠΕΛΟΣ DIESELS
ΑΝΩΝΥΜΗ ΕΤΑΙΡΕΙΑ
ΗΛΕΚΤΡΟΠΑΡΑΓΩΓΑ ΖΕΥΓΗ
ΝΑΥΤΙΚΟΙ & ΒΙΟΜΗΧΑΝΙΚΟΙ ΚΙΝΗΤΗΡΕΣ
ΕΥΚΛΕΙΔΟΥ 10 - 185 40 ΠΕΙΡΑΙΑΣ
ΤΗΛ. 2104178657 - 2104179849 - 2104121405
FAX: 2104137431
ΑΡ. Μ.Α.Ε. 39597/02/Β/97/167 - Α.Φ. 6934
Α.Φ.Μ. 094509800 - Δ.Ο.Υ. ΦΑΕ ΠΕΙΡΑΙΑ

This letter of authority should be on the letterhead of the Manufacturer and should be signed by a person competent and having the power of attorney to bind the Manufacturer. It should be included by the tenderer in its tender.

GEORGIOS KARKANIAS
PRESIDENT

A

03/12/18

KARKANIAS
ENVIRONMENTAL TECHNOLOGY S.A.

DEVIATIONS

GEORGIOS KARKANIAS
PRESIDENT

03/12/18

No	Subject	Employer requirements	Our design	Arguments
1	Gravel trap	It is located between the connecting shaft and the coarse screen.	It is located in front of the wastewater treatment plant shaft, just after the inlet sewer.	Objects like stones or wood pieces are removed in the front of WWTP. These objects can cause malfunctions of the control penstock (at the inlet) and the flow measuring device (at the by-pass line).
2	Gravel trap	It is a pit, where gravel and rough impurities will be trapped mainly by sedimentation. Extraction of the trapped material is achieved by means of a hydraulic double bucket grab.	Impurities are trapped in two basket screens, which operate in turn. Each one can handle the full flow capacity and is between two penstocks. Thus, there is no interruption of the operation since one basket screen can be in operation while the other can be in cleaning service.	Organic material doesn't remain in the pit, which could be a source of odor emission. Basket screens are lifted by means of a suitable lifting device.
3	Return and excess sludge pumping station	The structure shall be designed as a single-storey building with a saddle roof, with an underground section containing the sludge machinery-room and two sludge sumps.	Submersible pumps are used for the return and excess sludge. They are immersed in the pump station. Electrical switchgear for the pumps are in the main electrical panel in the sludge dewatering building, which is close to the pumping station. Consequently, there is no reason to construct a building over the pumping station.	Reduced operational costs: No cost for heating/ventilating of the building. No need of building preservation.
4	Aerobic stabilization tank	Blowers will be used for the aeration.	Jet aerator is proposed for the aeration. A spare pump for the aerator will be stored.	Reduced noise, no need to use a building. Consequently, you have the benefits, they are mentioned in No.3.
5	Automatic Service water pressure station	It shall include three pumps and a pressure vessel with min. capacity of 1000 l	The unit has two pumps and two pressure vessels having each of them capacity of 18 l. The pumps are driven by frequency controllers.	Pumps driven by frequency controllers are the modern solution for water pressure stations, because the consume less energy. At the same time, the pressure in the pipe network remains constant and it is not

GEORGIOS KARKANIAS
PRESIDENT

No	Subject	Employer requirements	Our design	Arguments
				depended on the water demand. Big pressure vessels are not needed.
6	Sludge dewatering unit	Macerators are used in front of the progressive cavity pumps	No macerators are used.	Reduced energy consumption. Macerators are used for raw wastewater, which might contain solids, and sometimes for primary sludge which may aggregation with hair.
7	Chemical Phosphorus Precipitation	$FeSO_4$ solution is used. The active element is Fe^{++}.	FeClSO4 solution is used. The active element is Fe^{+++}.	Less chemical consumption, because Fe^{+++} acts better than Fe^{++}.

GEORGIOS KARKANIAS
PRESIDENT

03/12/18

KARKANIAS

SITE ORGANISATION AND METHOD STATEMENT

GEORGIOS KARKANIAS
PRESIDENT

03/12/18

SITE ORGANIZATION

The site organization is presented in the attached drawing.

GEORGIOS KARKANIAS
PRESIDENT

03/12/18

DANILOVGRAD MUNICIPAL INFRASTRUCTURE
CONSTRUCTION OF WASTEWATER PLANT

KARKANIAS

GEORGIOS KARKANIAS
PRESIDENT

03/12/18

METHOD STATEMENT

Table of Contents

1. DESCRIPTION OF THE PROJECT 2
2. ACTIVITIES PRIOR TO COMMENCEMENT OF FIELDWORK. 2
3. KARKANIAS ENVIRONMENTAL TECHNOLOGY S.A. STAFF ACTIVITIES DURING THE EXECUTION OF THE WORK 4
4. PROCUREMENT OF MATERIALS AND EQUIPMENT 7
5. EXECUTION OF THE CIVIL WORKS 8
6. ELECTROMECHANICAL WORKS AND INSTRUMENTATION 10
7. MAIN ACTIVITIES OF THE CONSTRUCTION 13
8. TEMPORARY FACILITIES DURING CONSTRUCTION 15
9. ISO 9001 Certificate 16

GEORGIOS KARKANIAS
PRESIDENT

03/12/18

1. DESCRIPTION OF THE PROJECT

LEAD TIME

Completion of works: 680 days
Tests (including individual tests, complex tests, application for trial operation): 22 days
Project of maintenance of facility: 60 days
Trial operation: 365 days
Defects notification period: 550 days

OBJECTIVES

GENERAL OBJECTIVE

The objective of the construction methodology of Wastewater treatment Plant of Danilovgrad is to present the Methods and considerations taken for the implementation of the Project effectively and efficiently. Similarly, with the Specific Procedures of Quality Control of Karkanias Environmental Technology s.a., it is wanted to present, clearly and precisely, the way it will be develop each of the activities of the project, Engineering development, the provision of resources and supplies of materials and equipment, for the purpose of creating a reliable working environment, quality, and safe for everyone involved, that meets the requirements of the Tender dossier.

SPECIFIC OBJECTIVES

-Define the main procedures for the implementation of civil works, mechanical and electrical works of the Wastewater treatment Plant of Danilovgrad.
-Indicate the mechanisms of control and monitoring of works.

2. ACTIVITIES PRIOR TO COMMENCEMENT OF FIELDWORK.

Prior to the commencement of the execution of works, it shall establish the Residence of the Project, which shall perform the following activities:
The staff shall have full knowledge of site where works will be developed, knowing the relevant characteristics of it and the surrounding infrastructure of the project.
It will be delivered and will present to the Engineer a chart with the names of those responsible for each area of the Residence of the Project, accompanying it with curriculum of professionals, technicians and other personnel involved, according to what is offered in this tender.

It will be established jointly with the Engineer and Karkanias Environmental Technology S.A., a directory of the project, with the information of the public servants and respective

GEORGIOS KARKANIAS
PRESIDENT

03/12/18

representatives, so that they could be located easily, as well as of those of the authorities, dependences and organisms that have relation with the project.
It will be proposed to the Engineer, in detail, the quality control of civil works, electrical and mechanical, indicating the laboratory that it should used for the project, and the location of its facilities.
By Karkanias Environmental Technology S.A. will be integrated into the site office, documents relating to the executive project, authorized by the Engineer, which will include all memories, drawings, specifications, local official standards, catalogue of concepts to express volumes and unit prices including detailed scope, implementation programs and monthly amounts of the use of labor, supplies and use of machinery and construction equipment, as well as lists of materials and equipment to be installed in the project: : Danilovgrad Municipal Infrastructure - Construction of Wastewater Plant.

It will be done by Karkanias Environmental Technology S.A., the obtaining of Building permits from the appropriate authorities for the construction of works, with the support of Employer.
The Site Organization Offices will have its place of work within the site, with sufficient capacity to accommodate the staff, equipment and project files, equipped with the necessary facilities to carry out desks and with its facilities corresponding to light, water and other services that are needed. The site staff will be responsible for integrating the record of the project as carried out under the supervision and no objection of Engineer.
The site staff will organize and attend all meetings convened by the Engineer and the Employer, to review the working relationships and communication channels among participants in the execution of the work.
The Residence of the Project staff will schedule and inform Engineer, the opening of the different fronts, the location of offices, warehouses and field facilities and bank of material product of the excavation or demolition.

Preliminary considerations for Karkanias Environmental Technology s.a. and subcontractors designated.
Be considered before executing any activity, the following aspects:

Each crew personnel must have an appropriate work program developed and approved by the Project Resident Engineer that displays the execution of the works in a logical and sequential manner and in which prevails the quality, safety and environmental conservation. This work program will be submitted for the Approval of the Engineer as defined in tender dossier after the commencement date.

It must have the supplies and equipment selected for the construction, in order to allow each of the stages of construction - as specified in the technical solutions of construction - are met fully and in an efficient and comprehensive way.
The staff directly involved in the execution of scheduled tasks, must have the requisite experience and the proper training, equipment and supplies for personal protection.
All works will be carried out under the specific standards of quality, safety and environment, that have approval or no objection from the Engineer, and they will be executed in the term of execution that has been proposed for the present project.

03/12/10

The organization of Karkanias Environmental Technology s.a. will have the structure of personnel and equipment in such a way that allows it to support the work in progress, in the following fields:

- Detail engineering.
- Procurement.
- Administrative.
- Quality control and supervision of the works.
- Quality, Safety, Health and Environment.

3. KARKANIAS ENVIRONMENTAL TECHNOLOGY S.A. STAFF ACTIVITIES DURING THE EXECUTION OF THE WORK

GENERAL ACTIVITIES

During the execution of the work, Karkanias Environmental Technology s.a. will perform the following general activities:
Physically detect, and report to the Engineer, existing underground facilities on the site, which interfere with the execution of the work.

Solve the construction problems of technical order, provided they do not mean a project change, or adversely impact the budget, the implementation program, or affect safety, in which case it will be presented to the Administration a report on the specific problem, containing alternative solutions, with its evaluation of cost and time, in order to determine the pertinent.

Attend **weekly progress meetings** scheduled by the Employer, participate in analyzing and solving problems that interfere with the progress of the work, either technical or administrative; in which case, develop and deliver the respective minutes to the stakeholders.

TOPOGRAPHIC CONTROL

The necessary topographic tasks so that the works are realized according to the project, are a responsibility of the personnel of Construction designated by Karkanias Environmental Technology s.a. and will be performed through topography surveyors, covering the following aspects:
Leveling and general lines.
Construction sections.
Levels of display of structures and their correct location and sizing of elements.
Computer Equipment.

The construction personnel will have a computer equipment that will enable to develop the construction works and to present the information that the Engineer could ask, as well as monitoring of the works.

03/12/18

QUALITY CHECK

Below the activities that the Karkanias Environmental Technology s.a. staff will carry out to verify the quality of the work, and their facilities and equipment, with the responsibility to implement its program of internal quality control, essential in order to ensure compliance with the contractually agreed requirements, with advancing the construction of the work or manufacturing processes of equipment.

The construction personnel must verify compliance with quality requirements that are established in the drawings, particular project specifications, requirements of Engineer, or alternatively the National and International Standards applicable to basic materials, equipment, systems, construction or manufacturing processes, listed in the contracts of execution of work and in the procurement contract.

Request the possible subcontractors or suppliers designated for equipment, to deliver with the due anticipation the supply program for its approval, must know the basic engineering for review and verification, the source of supplies. Its requisition and production start dates, completion, testing periods of the manufacturer and reception in plant and on site, also, the period of inspection and/or final approval by the authorized technical personnel in charge, packaging, shipping and receiving in the warehouse or on site.

Implement the quality assurance program and submit it to the Engineer to seek their approval. The program shall indicate the laboratories to be used for testing, the frequency of sampling and testing of materials or products, and performance testing of equipment and systems. In addition, the names of suppliers, their location and the dates in which the inspection visits will be done to the corresponding sites.

Qualify the obtained results comparing them with the requisites of quality and the tolerances recorded in the specifications and current norms, submit the respective reports to the involved parties, meeting the deadlines agreed with the Engineer for each type of test.

When test results are not satisfactory, inform the Employer and subcontractor or provider in its case, that the works, materials and respective equipment will be rejected, explaining the reasons for that decision with due technical support, and indicating if it is necessary to proceed to its demolition, removal, replacement or correction.

Reject elements that do not meet specifications due to improper handling or storage, arrange its cleanliness or repair, and approve them to be used in the project, if the results are satisfactory.

With regard to the installation of equipment and devices that are part of the work, verify that the personnel of Karkanias Environmental Technology s.a. would adhere strictly to the indications of the instructive of installation and assembly.

Verify that the contractor performs testing and commissioning of equipment and devices, following the instructions in the operation manuals.

Observe and classify the subsoil according to their characteristics of attack, as the excavation progresses, keeping a photographic record of it and the equipment used.

Locate and submit if not objection from Engineer, banks of materials for earth works and, prior sending of these to the project.

Enforce and monitor the cleanliness of the work and protections and measures to improve environmental conditions, minimizing as much as possible the inconveniences that may occur.

03/12/18

CONTROL OF PROGRAMS

In the implementation phase of work, the following activities concerning the verification of physical progress of works, will correspond to Karkanias Environmental Technology s.a.:

Deliver in the term fixed by the Engineer, the detailed construction work programs for every front of work and the general program integrated from the previous ones, which shall respect the guidelines set by THE ENGINEER in its master program, regarding the starting and ending dates of the various stages of the project, coordination with other specialized subcontractors and receiving supplies. In addition, subprograms corresponding to the necessary resources and collaterals concerning to the evaluation of work.
Prepare the following subprograms:
-Machinery and construction equipment, indicating its characteristics and quantity for every work front.
-Supplies of materials, products and equipment that are part of the project.
-Human resources, classifying the needs of qualified personnel by specialty and category.

In any case, work programs must contain clearly identifiable items or activities, with the contractually agreed dates, and identify critical activities with the appropriate symbols; allocate the quantities of work to be undertaken in the periods into which it splits, using units of measurement of work that are consistent with the concepts listed, and units of time according to the type of program, the speed of advance and frequency overview.
Check that the time allocated to planned activities are consistent with the resources and considered yields, as well as the quantities of work to be performed.
Analyze the work programs and to give opinion on whether to accept or modify them, turning them to the General Residence of THE ENGINEER, for its knowledge.
Implement these programs in the project, once submitted by THE ENGINEER, which will be considered as contractual documents, verifying that there is no front of work that lacks program.
Verify the Contractor complies with the programs, where applicable, to ensure the contractually agreed delivery dates, comparing the real production against the programmed one, with the predetermined frequency of review or the one that deserves the problems of advance of the work.
To this effect will be a record of the quantities of work executed in the period, which could be considered to be finished, which are measured in the same units as those contained in the program, as well as work in process, weighting its degree of progress. Similarly, it will be treated the control of advance of the providers.

GEORGIOS KARKANIAS
PRESIDENT

03/12/18

4. PROCUREMENT OF MATERIALS AND EQUIPMENT

The definition of mechanical and electrical equipment, instrumentation and control, and procurement of materials, will be made according to the product of the Engineering Review.
All supplies will be delivered to the warehouses of the project, on the dates specified in the schedule of supplies to be formulated at the end of the Detailed Engineering.
For reception will proceed in accordance with established procedures and technical specifications determined in Detailed Engineering, establishing a process of control that will allow to know in any moment the received, classified, dispatched and lacking quantities to the date of such requirement.
Be taken into account that prior to all this, it shall be enabled and properly conditioned the storage area of materials and equipment, according to the instructions of the manufacturers and suppliers.
It shall be made appropriate lists of the materials to be received, making a detailed inventory of each item, checking the reception status.
In case of defective materials, shall be made the appropriate listings in order to proceed to the repair or replacement of them, as appropriate, reporting at all times to THE ENGINEER.
At the end of the reception of the supplies will be signed internally and as a conformity manner, Minutes of Reception of materials and supplies with the pertinent notes on the defective materials, if any.
In the reception processes will be properly recorded the following information:
•Type of material (description of N° of equipment or component, according to catalog).
• Amount received.
•State of the packing.
• State of equipment received.
• Existing damage, if any.
• Missing elements.
• Surface finish (coating condition), in the case of supports and frames.
• Date of receipt and exit in store.
• Person who delivers.
• Person who receives.

MOBILIZATION, EQUIPMENT TRANSPORTATION AND CONSTRUCTION MATERIALS

In general, mobilization, equipment transportation and construction materials shall be in accordance with the schedule use of equipment and work activities to be undertaken, which will be presented in due course to THE ENGINEER.
For this purpose, suitable means of transport shall be used to prevent damage to materials, equipment and other supplies.
In general, this activity will be properly coordinated so that none phase of construction is affected by the eventual lack of equipment and materials.

GEORGIOS KARKANIAS
PRESIDENT

03/12/18

5. EXECUTION OF THE CIVIL WORKS.

STRIPPING OF TOP SOIL.

Before starting the cleaning tasks are carried out in the sectors of the work to be executed by removing shrubs and other elements of interference with the work, to free up the sector fully to the purpose of enabling the proper conduct stakeout.
Before starting work there will be a general topographic stakeout of the work area and cleaning of the vegetable layer by mechanical means in the sector corresponding to the work as project blueprints.

EXCAVATIONS

For the excavation of large volumes, consisting of the cutting and removal of all material to be eliminated to reach the levels indicated by the Project, massive methods will be used being specially careful in that these excavations do not damage the integrity of the existing structural elements. The equipment to be used shall be in perfect conditions to operate and will be the suitable ones for the assigned work, guaranteeing in this way an optimal yield.
The whole material product of the cut and extraction will be transported inside the project area to pre-established zones indicated in the project in order to be used in construction and the rest of surplus materials will be transported to the location designated by Employer.
The control of these excavations will be done exclusively by means of topographic equipment.

COMPACTED FILLING

For the filling needed to reach the indicated levels of platforms, massive methods will be used.
These shall be confirmed by materials removed from excavations, in case they were suitable for these fillings. The equipment to use will be in good working condition and will be ideal for the work assigned, ensuring optimum performance.
The fillings shall be made in accordance with the technical specifications indicated in the technical expedient and the control of the levels will be realized by means of topographic equipment.

CONCRETE WORKS

The tracing of the work strictly according to approved plans and the indications given by the resident work, previous authorization from THE ENGINEER.
In making the general stakeout of the work, shall be fixed reference points for lines and levels, in inalterable form.
Preparation of terrain: By cleaning is removed from the terrain all existing material, waste, plants, trunks or roots that may hamper the construction work.

GEORGIOS KARKANIAS
PRESIDENT

03/12/18

Reinforced concrete

Formwork: will be dimensioned in order to withstand the launch pressure and vibration of fresh concrete, as well as the weight of the personnel involved in those operations.

Shall be watertight in order to prevent leakage of grout and mortar. Each emptying will take care to ensure adequate adhesion to the hardened concrete of previous emptying.
As for the forms of walls and other repetitive elements, elements shall be manufactured especially designed in steel and/or wood, in order to simplify the work of formwork and stripping, minimizing downtime.
The reuse of the formworks will always be conditioned to clean them once the stripping of the previous filling is done.
Immediately after proceeding to the careful stripping of the prompt structures, the union points will be repaired, as well as other defects that could exist.
Formwork panels will be mobilized, according to its weight manually or with lifting equipment and its position shall be controlled permanently, seeking to correct any lead output or deformation of the structure. For the propping of the structure when necessary shall be used props of section adapted to the charges to be supported.
In the propping of roof flagstone shall be used well known brands equipment from the formwork market, the type of formwork will be considered depending on the height and thickness of the flagstone.

Steel structure: equipment used for cutting and bending of the trusses shall be placed in an area specially set aside for them. These services shall be executed with proper equipment and specialized personnel. The raw steel will be stored separately by diameter and out of the direct contact with the ground, using for it sleepers of concrete or wooden. The steel bars shall be clean, avoiding any contact with substances that may affect the adhesion of concrete. The cutting and bending of trusses shall obey a planning, so as to minimize losses, by ordering the production flow according to the implementation schedule, thus ensuring the normal course of work.
To ensure proper positioning of the trusses shall be used spacers of mortar or plastic, built at a dosage of the same, compatible with the concrete strength specified for the piece.
Special pieces shall be manufactured also for fixation of the trusses, making sure that metallic points do not outcrop on the surface of concrete.

Concrete: The concrete premixed with cement as indicated in the detailed engineering.
In order to ensure the strength and quality of concrete specified in the project, shall keep a tight control of dispatch as well as testing of fresh concrete and hardened concrete.

The compaction of the concrete will be achieved by applying vibration criteria. It is envisaged the use of immersion vibrators, of diameters adapted to the type of concrete to be poured and to the section of the element to be realized.
The curing of concrete shall be realized by means of the application of additives.
In the construction, joints of the elements that will be in contact with the water shall be used joints that may be PVC or suitable material in each case.

GEORGIOS KARKANIAS
PRESIDENT

03/12/18

Carpeting work

Masonry work involves the construction of walls, partitions, block and parapets on clay brick masonry, concrete as indicated in the detailed engineering plans.
Labor to be used in masonry construction shall be qualified and full compliance with the basic requirements of project:
a) The walls must be constructed to lead and in line.
b) All horizontal and vertical joints, shall be completely filled with mortar.
c) The thickness of the mortar joints shall be at least 10 mm and on average 15 mm.
d) The partitions or blocks shall settle with the clean surfaces and without water.
h) The mortar shall be prepared only in the right amount for the use of one hour, not allowed the use of remixed mortar.
At all times, it shall be checked the verticality of the walls.
On the walls meeting shall be required the simultaneous raising of them for which shall provide the scaffolding for the assembly of adjacent walls.
All brick walls shall be tied to columns with any of the following procedures or a combination of them, according to blueprints.

GEORGIOS KARKANIAS
PRESIDENT

6. ELECTROMECHANICAL WORKS AND INSTRUMENTATION

03/12/18

Shall be checked that the material received matches the order placed to the manufacturer,
verifying it through the list of material accompanying it and monitoring the proper status of each element.
There will be the manufacturer's instructions regarding the treatment of the material in stages of unpacking, handling, storage and protection during mounting.

ASSEMBLY

Before to the beginning of the mounting, shall be verified the suitability and good condition of the place defined in the installation blueprints the following checkpoints will have priority:
Protect equipment and mainly the electronic against solar beams and transitory sources of heat.
Avoid mounting when the intended location is subject to sudden changes in temperature.
Avoid mounting in areas that can be crossed by pipelines that can carry any type of liquid.
Avoid mounting of equipment in areas subject to strong vibrations, without taking the necessary measures.
Respect the instructions of the respective manufacturers in terms of position of mounting of the equipment, coating in areas of high or low temperature.

MECHANICAL INSTALLATION

Screws, bolts, nuts and washers shall be as indicated by the manufacturer on the mounting instructions.
In equipment that is installed in piping (flow meters, pressure transmitters, etc.) must respect the following slogans:

ALIGNMENT OF THE EQUIPMENT WITH PIPING

Assembly joints

Joints of the same size as the pipe to avoid disturbance in the fluid.
Putting to ground:
As general norm, the screws of the bridles or elements of fixation, shall not be used for the connection of the putting to ground.
In equipment that is installed in piping shall be taken into account the following:
Use a copper hose with both ends finished in terminal and join both flanges by means of threaded screws in the flanges themselves. By a bare copper wire of section superior to 4 m/m2. Join one of the flanges to the general land network of the installation.
For equipment that is installed on metal fittings or directly on wall, shall be taken into account the manufacturer's instructions as to the ground connection.

GEORGIOS KARKANIAS
PRESIDENT

Electrical installation

03/12/18

All instrumentation equipment are connected to electrical conductors for both their supply and sending signals to a control board, the following indications shall be observed:
Each connection must be isolated from all other.
Do not connect any connection to the screen cables or drain, except as noted on plans.
Cable entries must be properly sealed.
The cable entries used must be suitable for the size of cable used ensuring that the closure has to be airtight.
The unused cable entries must be closed and sealed.
For connection shall always be observed the manufacturer's instructions.
Cover any cable that is naked.
Coaxial cables shall be twisted slightly.

Sealing

To achieve environmental protection in connection boxes (sealing) of equipment shall be made an encapsulation of them respecting the following points:
Apply appropriate precautionary measures in handling hazardous materials or of special uses.
Read the manufacturer's instructions carefully before preparing the material or special handling equipment.
The box terminals or connections must be encapsulated immediately at the end of connection to prevent moisture penetration.
Check all connections prior to encapsulation.
Do not refill excessively the connections box nor to leave that the material of encapsulated does contact neither with the theoretical joint or with the groove.

GEORGIOS KARKANIAS
PRESIDENT

03/12/18

7. MAIN ACTIVITIES OF THE CONSTRUCTION

The main activities considered in the work plan are, Construction of:

Inlet and overflow manhole
Septage unit
Pumping station
Mechanical Wastewater Pre-treatment Unit
Flow Distribution Chambers I & II
Predenitrification Tank
Circulating Activated Sludge Tank
Final Settling Tank
Return Activated Sludge and Excess Sludge Pumping
Chemical Phosphorus Precipitation
Filtration Unit
UV Disinfection Unit – Effluent
Sludge Aerobic Stabilisation and Thickening Tank
Sludge Holding Tank
Sludge Mechanical Dewatering Unit
Service Water Unit
Dewatered Sludge Storage Site
Blower House
Transformer House
Operation Building / Warehouse / Garage

Pipe works
Landscaping works
Fencing works

Mechanical Installations
Electrical Installations

PRELIMINARY CONSTRUCTION SCHEDULE

Construction schedule in form of Gantt chart is given in separate attachment as requested by tender dossier.

RECEDENCE AND SUCCESSION AMONG ACTIVITIES

The different tasks of a work are not performed normally in succession not simultaneously. Make all the jobs in succession would, in general, illogical, because it would lead to greatly prolong the time. Trying to simultaneously in all cases is also absurd, because some of them can only be made when previous ones have already been completed, in whole or in part.
The jobs are linked with the preceding and the following in the most convenient order, so as to properly solve the technical demands of the work, achieving an optimum combination of cost and time. This is a challenging job that requires studying various alternatives to be able to choose the one which gives better response to the objectives.

03/12/18

The relationship between different jobs is obvious, but many others can be done in one or another time, as the technical solution is adopted or depending on the availability of resources or the best distribution.
With these basis it will be done the predecessor and successor jobs table, determining what and how to precede each of the defined in time programme. Linkages necessaries for the preparation of the work program are defined.
In the developing of the work program will use four different types of relationships:
The relationship end to start (FC) is the default connection when jobs are related. Once the first job finishes, the next to begin.
A relationship is an end to end (FF) when the two jobs end at the same time.
In a relationship beginning to start (SS) the two jobs start at the same time.
The relationship beginning to end (SF) is less common than the others, but can occur when the completion of a job depends on the beginning of a subsequent job.
Attached is the list of precedence and succession, each of the activities selected to serve on the programming of work.

CRITICAL ACTIVITIES

Throughout the execution of the works subject of this planning will be manifested a series of activities whose duration will determine the other units. They are the critical activities.
On that basis they will develop the remaining works directly conditioned by them; these non-critical works will have certain time margins for implementation, being represented as gaps.
Since the work does not present a unique pattern of action, because the fronts of action are not unique, there is some uncertainty in regard unexpectedly, it is difficult to establish in advance what activities have or have no gaps.
It is therefore planned an implementation program consistent with the actions to be taken, which foresees a series of activities which by their volume, complexity or generating units, will be conditions of other jobs, regardless of which can happen unexpectedly.
Some of them will be critical for reasons of direct dependence, while others have been established because of strict security, etc.
Also appear certain activities which although not strictly critical, have been highlighted as such, in order to emphasize the importance of a temporal milestone or development of an activity that for many aspects is remarkable in any sense for the proper development of works.

GEORGIOS KARKANIAS
PRESIDENT

03/12/18

8. TEMPORARY FACILITIES DURING CONSTRUCTION

The temporary facilities to during the construction are:
-Temporary offices for Contractor and Employer/Engineer as requested
-An area for material storage
-A provisional connection of supplies (water, electricity and telecommunications)
-Toilets for workers and technical staff on site

Temporary facilities are shown in separate attachment Site organization, as requested by Tender dossier.

Location of the "Danilovgrad WWTP construction site"

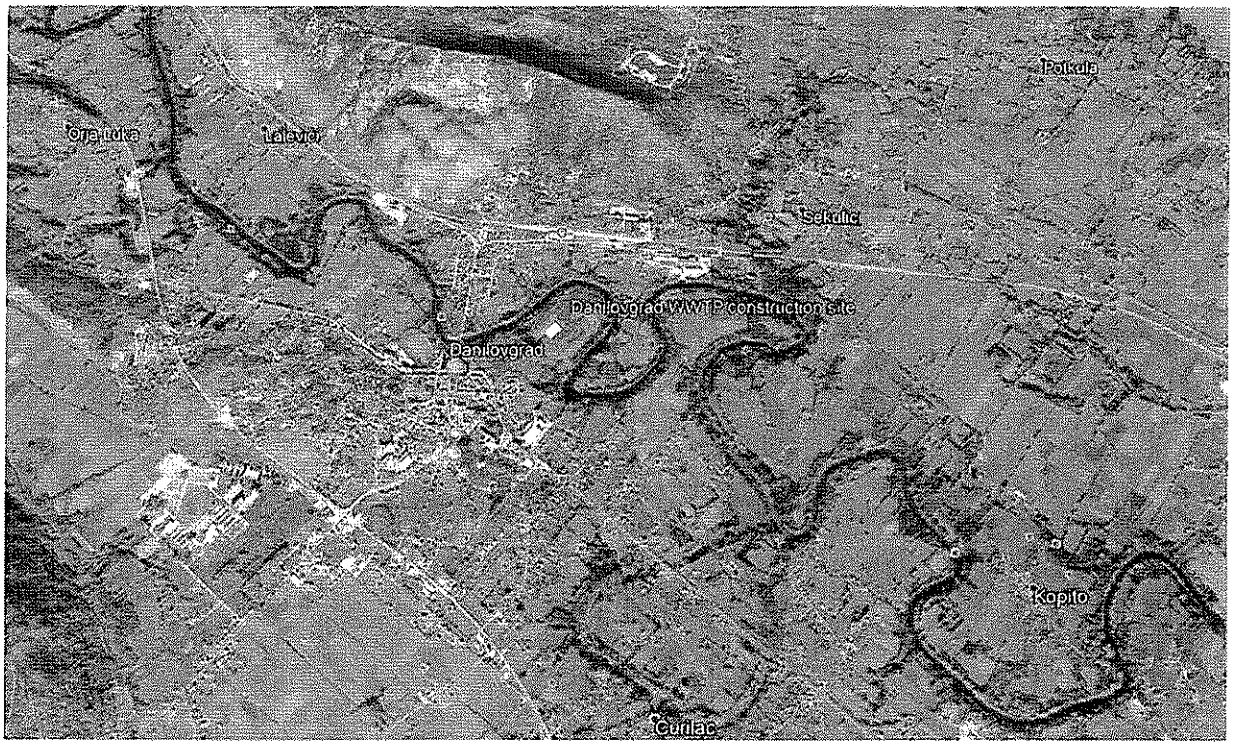

GEORGIOS KARKANIAS
PRESIDENT

03/12/18

9. ISO 9001 Certificate

CERTIFICATE OF REGISTRATION

This is to certify that

KARKANIAS ENVIRONMENTAL TECHNOLOGY S.A.
Industrial Area of Larissa
PC 41004
PO Box 3053
Larissa
Greece

has been audited and found to meet the requirements of standard
ISO 9001:2008 Quality Management System

Scope of certification

General Contractor in Design, Construction, Operation and Maintenance of Water management Liquid and Solid Wastes Projects in which Hydraulic, Electromechanical, Structural, Industrial, Energy Projects, Roads and Ports Construction are included.

ertificate number: 10096

ue number: 2017-01

rtificate start date: 19 February 2017

rtificate expiry date: 14 September 2018

te of initial certification: 19 February 2014

Karen Prendergast
Sector Director - Certification
Exova BM TRADA

GEORGIOS KARKANIAS
PRESIDENT

03/12/18

CONSTRUCTION SCHEDULE STATEMENT

The objective of the Construction Schedule of Wastewater treatment Plant of Danilovgrad is to present the time schedule and considerations taken for the implementation of the Project effectively and efficiently.

Commencement date shall be the date at which Contract Agreement will be signed and the Employer will receive the Performance Security and the Professional Indemnity Insurance.
Prior the implementation of any Contracted work, Contractor will have access to site and start the mobilization of his plant and equipment. Contractor will have access to the site fourteen (14) days after the commencement date and his mobilization will be done in the time schedule of two weeks.

Afterwards of Commencement Date, will start the implementation of "Preliminary Design" for 90 days, followed by the "Revision & Control of preliminary" for 30 days and "EIA" for 45 days.
After those activities, will start the procedure of issuing of "Building Permit" in duration of 60 days.
When the issuing of "Building Permit" will be completed, will start the implementation of "Main Design" for 60 days, followed by the "Revision & Control of main design" for 30 days.
Time for completion is defined 365 days and time for tests is defined 22 days.
After the completion of works and tests, will be executed the "Project of maintenance of facility" (60 days) and "Trial Operation" of the Project for the duration of 365 days, concluded in Completion day after 30 days.

Key materials of the Project can be defined the Mechanical and Electrical Equipment.
After the approval of the Equipment, it will be purchased and transport at the Construction Site in separate time periods, as it is presenting in the Construction Schedule Table. Main priority is the continuous execution of Mechanical and Electrical works including the transportation of goods and installation of the equipment in each part of the Project.

Concrete and reinforcement, materials than can be characterized as key materials, are existing and will be delivered at the Construction Site from close distance and their procurement procedure will be immediate during the implementation of site works.

GEORGIOS KARKANIAS
PRESIDENT

03/12/18

MOBILISATION AND CONSTRUCTION SHEDULES

GEORGIOS KARKANIAS
PRESIDENT

03/12/10

KARKANIAS

CONSTRUCTION SCHEDULE

The construction schedule is attached.

GEORGIOS KARKANIAS
PRESIDENT

03/12/18

MOBILISATION SCHEDULE

Table of Contents

1. **Introduction**..... 2
2. **Mobilization Activities**..... 2
3. **Mobilization of Equipment**..... 3

GEORGIOS KARKANIAS
PRESIDENT

03/12/18

1. Introduction

Upon award of the Contract and authorization to proceed, mobilization activities will commence according to this Mobilization Plan.

Mobilization will consist of the following:

1. Mobilization of necessary labor, materials, equipment, tools and supervision to commence work on the project.
2. Continued processing of the required submittals which includes administrative and procedural requirements for submitting project work plans, product data, samples and any other submittals required in the Project Specifications.
3. Performance of pre-construction activities, which include the construction of protection fence and staging support trailers.
4. The Contractor personnel, taking part in the active remediation activities, will receive the required medical surveillance (initial entrance physicals) prior to any hazardous or intrusive the work being performed.

2. Mobilization Activities

Based on the nature of the project, will be constructed main site fence and entrance for protection and safety reasons.

1. Installation of a temporary chain link fence where is needed, around the perimeter of construction facilities, for protection and safety reasons.
2. Construction Site entrance will be constructed in site fence protected facility of the project. The construction sequence will include:
    a. Removal of the existing stone surface and soils,
    b. Compaction of ground,
    c. Installation of geotextile fabric,
    d. Delivery, placement and compacting of crushing stone covering the geotextile fabric.
    e. Installation of temporary site entrance.

GEORGIOS KARKANIAS
PRESIDENT

03/12/18

3. Deliver, stage, block and anchor temporary office trailers. Each trailer will be furnished and supplied with the necessary office furniture, equipment and supplies. Temporary utility services will be supplied. Potable water and portable toilets will be provided to service the support facility. The support facility will be maintained in a clean and orderly fashion the Project.
4. The foundation and surface layer for the temporary office trailers, employee/visitor parking area and access roads will be constructed as an aggregate base layer with delivery, placement and compaction of gravel/ base stone. This layer of stone will be graded to insure proper drainage is maintained and does not impact the surrounding area.

3. Mobilization of Equipment

General and heavy equipment will be mobilized to the site and will be staged inside the Project's security fence.

GEORGIOS KARKANIAS
PRESIDENT

03/12/18

CONTRACTOR'S EQUIPMENT

GEORGIOS KARKANIAS
PRESIDENT

3/12/18

ФИЈА

KARKANIAS

Letter of intent

This letter of intent refers to cooperation on project:Danilovgrad Municipal Infrastructure - Construction of Wastewater Plant.

According to published tender document No. EBRD ME DAN 9000,D.O.O. "Vodovod i kanalizacija" Danilovgrad, announced tender for procurement of Construction of Wastewater Plant.

Company "**Karkanias Environmental Technology S.A.**". with headquarters on address Industrial Area of Larissa Postal Code 41004 Postal Box. 3053 Larissa, Greece is specialized company in field of construction of waste water plants and waste water treatment, and participates on the above tender procurement as tenderer.
Company **IGP "FIDIJA" d.o.o** with headquarters on address StaraVaros B7, Postal Code 81000 Podgorica, Montenegrois active on civil engineering construction i.e.: earth works (wide excavations and transport of materials for all kind of buildings), (road construction, water systems, sewage systems and similar), hydro technical facilities (river regulation, mini hydropower plants etc.), and residence building construction.

With this letter the above mentioned companies confirm their interest for cooperation on project "Construction Of Wastewater Plant"; promoted by the Municipality of Danilovgrad, Montenegro.

Company "**Karkanias Environmental Technology S.A.**"intendsto use **IGP "FIDIJA"d.o.o** 'savailable equipmentfor implementation of the project as it statedin the relative tender forms and attachments,
Company **IGP "FIDIJA" d.o.o** is willing to disposethe above mentioned equipment for implementation of the projectto the **"Karkanias Environmental Technology S.A."**

Preconditions for cooperation based on this letter of intent are:
Employer's evaluation of "Karkanias Environmental Technology S.A." as the successful tenderer of the project.
Achievement of a mutual agreement between the above mentioned companies

Letter of intent is verified by authorized representatives of companies with their signatures and stamps:

IGP "FIDIJA"d.o.o.
IvanBlagojevic, Executive director

Date. 4/9/2017

Karkanias Environmental Technology SA.
GiorgosKarkanias, President

KARKANIAS ENVIRONMENTAL TECHNOLOGY S.A.
INDUSTRIAL AREA OF LARISA - GREECE
POSTAL CODE 41004, BOX 3053
TEL.: +30 2410 541386 - FAX: +30 2410 541354
Email: info@karkanias.gr
TAX NUMBER: 095244711
REGISTRATION NUMBER: 48779/31/B/01/12

Date:4 / 9/ 2017

3/12/18

iii) CONTRACTOR'S EQUIPMENT

The Tenderer shall provide adequate information to demonstrate clearly that it has the capability to meet the requirements for the key equipment listed in Volume I, Attachment 2 (Preliminary Programme). A separate Form shall be prepared for each item of equipment listed, or for alternative equipment proposed by the Tenderer. The Tenderer shall provide all the information requested below, to the extent possible. Fields with asterisk (*) shall be used for evaluation.

In case of a JVCA the form shall be submitted for each partner of the JVCA

Type of Equipment* EXCAVATOR		
Equipment Information	Name of manufacturer CATERPILAR	Model and power rating 323D , 110KW
	Capacity* 1300 l	Year of manufacture* 2007
Current Status	Current location BIJELA, TIVAT, MONTENEGRO	
	Details of current commitments	
Source	Indicate source of the equipment ☐ Owned ☒ Rented ☐ Leased ☐ Specially manufactured	

The following information shall be provided only for equipment not owned by the Tenderer.

Owner	Name of owner IGP FIDIJA d.o.o.	
	Address of owner STARA VAROS, BLOCK 7, 81000 PODGORICA	
	Telephone +382 (0) 20 621140	Contact name and title Ivan Blagojevic, Director
	Fax	Telex
Agreements	Details of rental / lease / manufacture agreements specific to the project	
	Company IGP FIDIJA d.o.o. is owner of specific equipment and it is willing to dispose it based on the "Letter of Intent" signed between KARKANIAS ENVIRONMENTAL TECHNOLOGY S.A. and IGP FIDIJA d.o.o.	

GEORGIOS KARKANIAS
PRESIDENT

3/12/18

MONTINSPEKT d.o.o. Podgorica
TEHNIČKA ISPITIVANJA, KONTROLA KVALITETA I KVANTITETA, INŽENJERING
Podgorica, Bulevar Pera Četkovića 113, tel./fax: 020 656-920; 069 019 755;
e-mail: monlinspekt@t-com.me

STRUČNI NALAZ

O PREGLEDU I ISPITIVANJU SREDSTVA ZA RAD

br.: PG/450 01/04/16

SREDSTVO ZA RAD: BAGER
NARUČILAC/VLASNIK : IGP "FIDHA" D.O.O., PODGORICA
DATUM PREGLEDA I ISPITIVANJA: 25.08.2016.god.

I - A/ OPŠTI PODACI

PROIZVODAČ: " CATERPILAR " Francuska
BROJ ŠASIJE: " CAT0323DASED00234 "
MODEL/TIP: " 323D "
GOD.PROIZVODNJE: 2007
UPRAVLJANJE: Iz kabine
VRSTA POGONA: Motor SUS- Dizel

II - REZULTATI PREGLEDA I ISPITIVANJA

A) MAŠINSKI DIO

-STANJE METALNE KONSTRUKCIJE:..... zadovoljava
-MEHANIČKA ZAŠTITA ROTACIONIH I POKRETNIH ELEMENATA ..... zadovoljava
-ZVUČNA SIGNALIZACIJA ..... zadovoljava
-STANJE HIDRAULIČNE INSTALACIJE ..... zadovoljava
-STABILNOST SREDSTVA ..... zadovoljava
-POGONSKI UREĐAJ: ..... zadovoljava
-KOČIONI UREĐAJ:..... zadovoljava
-STANJE UREĐAJA ZA UKLJ., UPRAV. I ISKLJUČ..... zadovoljava
-STANJE PNEUMATSKE INSTALACIJE ..... zadovoljava

III - NAPOMENA :

A)Pregled i ispitivanje su izvršena u skladu sa Zakonom o zaštiti i zdravlju na radu(SL. RCG br..34/14), i Pravilnika o postupku i rokovima za vršenje periodičnih pregleda i ispitivanja spedstava za rad sredstava i opreme lične zaštite na radu i uslova radne sredine(SL. RCG br.: 71/05)
B) Stručni nalaz ima važnost 36 mjeseci ukoliko nije došlo do remonta i promjene lokacije sredstva za rad.
C) Sredstvo za rad može održavati samo stručno lice mašinske i elektro struke uz korišćenje kvalitetnih rezervnih djelova.

IV - OCJENA: NA NAVEDENOM SREDSTVU ZA RAD SU OBEZBIJEDENE PROPISANE MJERE I NORMATIVI ZAŠTITE NA RADU.

Dostavljeno :
"Naručioca " x2
a/a

Pregled i ispitivanje izvršili :

Sebek Branislav,dipl.el.ing

Otašević Radoje , dipl.maš.ing

Popović Vesna , dipl.grad.ing

Draškovic Slobodan, Svc.zm

Ova kontrola/ispitivanje izvršena je prema našem najboljem znanju i savjesti i odaci se od ljudstva za stanje u vrijeme izvršenih nase kontrole. Stručni nalaz je dozvoljeno reprodukovati samo kao cjelinu uz dozvolu izdavaca i isti je valjan ukoliko je originalno potpisan i pečatom ovjeren.

GEORGIOS KARKANIAS
PRESIDENT
3/12/18

iii) CONTRACTOR'S EQUIPMENT

The Tenderer shall provide adequate information to demonstrate clearly that it has the capability to meet the requirements for the key equipment listed in Volume I, Attachment 2 (Preliminary Programme). A separate Form shall be prepared for each item of equipment listed, or for alternative equipment proposed by the Tenderer. The Tenderer shall provide all the information requested below, to the extent possible. Fields with asterisk (*) shall be used for evaluation.

In case of a JVCA the form shall be submitted for each partner of the JVCA

Type of Equipment* EXCAVATOR		
Equipment Information	Name of manufacturer CATERPILAR	Model and power rating 325C , 140KW
	Capacity* 2000 l	Year of manufacture* 2006
Current Status	Current location BIJELA, TIVAT, MONTENEGRO	
	Details of current commitments	
Source	Indicate source of the equipment ☐ Owned ☒ Rented ☐ Leased ☐ Specially manufactured	

The following information shall be provided only for equipment not owned by the Tenderer.

Owner	Name of owner IGP FIDIJA d.o.o.	
	Address of owner STARA VAROS, BLOCK 7, 81000 PODGORICA	
	Telephone +382 (0) 20 621140	Contact name and title Ivan Blagojevic, Director
	Fax	Telex
Agreements	Details of rental / lease / manufacture agreements specific to the project	
	Company IGP FIDIJA d.o.o. is owner of specific equipment and it is willing to dispose it based on the "Letter of Intent" signed between KARKANIAS ENVIRONMENTAL TECHNOLOGY S.A. and IGP FIDIJA d.o.o.	

GEORGIOS KARKANIAS
PRESIDENT
3/12/18

MONTINSPEKT d.o.o. Podgorica
TEHNIČKA ISPITIVANJA, KONTROLA KVALITETA I KVANTITETA, INŽENJERING
Podgorica, Bulevar Pera Ćetkovića 113; te/.fax: 020 656-920; 069 019 755; e-mail: montinspekt@t-com.me

STRUČNI NALAZ

O PREGLEDU I ISPITIVANJU SREDSTVA ZA RAD

br.: PG/123-02/04/16

SREDSTVO ZA RAD: BAGER
NARUČILAC/VLASNIK : "FIDIJA" D.O.O., PODGORICA
DATUM PREGLEDA I ISPITIVANJA: 06.04.2016.god.

I - A/ OPŠTI PODACI -

PROIZVOĐAČ: " CATERPILAR "
BROJ ŠASIJE: " CAT0325CLCSJ01206 "
MODEL/TIP: " 325C "
GOD.PROIZVODNJE:
UPRAVLJANJE: Iz kabine
VRSTA POGONA: Motor SUS- Dizel

II - REZULTATI PREGLEDA I ISPITIVANJA

A) MAŠINSKI DIO

-STANJE METALNE KONSTRUKCIJE:	zadovoljava
-MEHANIČKA ZAŠTITA ROTACIONIH I POKRETNIH ELEMENATA	zadovoljava
-ZVUČNA SIGNALIZACIJA	zadovoljava
-STANJE HIDRAULIČNE INSTALACIJE	zadovoljava
-STABILNOST SREDSTVA	zadovoljava
-POGONSKI UREĐAJ:	zadovoljava
-KOČIONI UREĐAJ:	zadovoljava
-STANJE UREĐAJA ZA UKLJ., UPRAV. I ISKLJUČI	zadovoljava
-STANJE PNEUMATSKE INSTALACIJE	zadovoljava

III - NAPOMENA :

A)Pregled i ispitivanje su izvršena u skladu sa Zakonom o zaštiti i zdravlju na radu(SL. RCG br.:34/14), i Pravilnika o postupku i rokovima za vršenje periodičnih pregleda i ispitivanja spedstava za rad, sredstava i opreme lične zaštite na radu i uslova radne sredine(SL. RCG br.: 71/05)
B) Stručni nalaz ima važnost 36 mjeseci ukoliko nije došlo do remonta i promjene lokacije sredstva za rad.
C) Sredstvo za rad može održavati samo stručno lice mašinske i elektro struke uz korišćenje kvalitetnih rezervnih djelova.

IV - OCJENA: NA NAVEDENOM SREDSTVU ZA RAD SU OBEZBIJEĐENE PROPISANE MJERE I NORMATIVI ZAŠTITE NA RADU.

Dostavljeno :
"Naručiocu " – x2
a/a

"MONTINSPEKT" d.o.o. PODGORICA za usluge kontrole, prometa i inženjering

Pregled i ispitivanje izvršili :
Šoćić Branislav,dipl.el.ing.
Orašević Radoje, dipl.maš.ing.
Popović Vesna , dipl.grad.ing.
Drašković Slobodan, Scc.znr.

Ova kontrola/ispitivanje izvršeno je prema našem najboljem znanju i savjesti i odnosi se isključivo na stanje u vrijeme izvršenja naše kontrole. Stručni nalaz je dozvoljeno reprodukovati samo kao cjelinu uz dozvolu izdavača i isti je valjan ukoliko je originalno potpisan i pečatom ovjeren.

GEORGIOS KARKANIAS
PRESIDENT

31/12/18

iii) CONTRACTOR'S EQUIPMENT

The Tenderer shall provide adequate information to demonstrate clearly that it has the capability to meet the requirements for the key equipment listed in Volume I, Attachment 2 (Preliminary Programme). A separate Form shall be prepared for each item of equipment listed, or for alternative equipment proposed by the Tenderer. The Tenderer shall provide all the information requested below, to the extent possible. Fields with asterisk (*) shall be used for evaluation.

In case of a JVCA the form shall be submitted for each partner of the JVCA

Type of Equipment* EXCAVATOR		
Equipment Information	Name of manufacturer PALAZZANI INDUSTRIE	Model and power rating PB903S , 77KW
	Capacity* 1100 l	Year of manufacture* 2009
Current Status	Current location BIJELA, TIVAT, MONTENEGRO	
	Details of current commitments	
Source	Indicate source of the equipment ☐ Owned ☒ Rented ☐ Leased ☐ Specially manufactured	

The following information shall be provided only for equipment not owned by the Tenderer.

Owner	Name of owner IGP FIDIJA d.o.o.	
	Address of owner STARA VAROS, BLOCK 7, 81000 PODGORICA	
	Telephone +382 (0) 20 621140	Contact name and title Ivan Blagojevic, Director
	Fax	Telex
Agreements	Details of rental / lease / manufacture agreements specific to the project	
	Company IGP FIDIJA d.o.o. is owner of specific equipment and it is willing to dispose it based on the "Letter of Intent" signed between KARKANIAS ENVIRONMENTAL TECHNOLOGY S.A. and IGP FIDIJA d.o.o.	

GEORGIOS KARKANIAS
PRESIDENT

3/12/18

MONTINSPEKT d.o.o. Podgorica
TEHNIČKA ISPITIVANJA, KONTROLA KVALITETA I KVANTITETA, INŽENJERING
Podgorica, Bulevar Pera Četkovića 113; tel./fax: 020 656-920; 069 019 755; e-mail: montinspekt@t-com.me

Broj: 386-01/04/17
Podgorica, 18.08.2017. god.

STRUČNI NALAZ
O PREGLEDU I ISPITIVANJU SREDSTVA ZA RAD

SREDSTVO ZA RAD: KOMBINOVANA GRAĐEVINSKA MAŠINA
NARUČILAC/VLASNIK : " IGP FIDIJA " D.O.O. Podgorica
MJESTO I DATUM PREGLEDA I ISPITIVANJA: Podgorica , 18.08.2017.god.

I - A/ OPŠTI PODACI -

Proizvođač: " Palazzani industrie "- Italia
Tip: " PB903S "
Fabr.br.: PB903S14082
Interni broj: 010
God.proizvodnje:2009
Pogon: SUS-Dizel
Upravljanje: iz kabine

II - REZULTATI PREGLEDA I ISPITIVANJA:

A) MAŠINSKI DIO

- Stanje pogonskog i prenosnog mehanizma..... ZADOVOLJAVA
- Stanje uređaja za uključenje, upravljanje i isključenje ..... ZADOVOLJAVA
- Zaštita opasnih mjesta (transmisije i rotacionih djelova) ..... ZADOVOLJAVA
- Natpisne pločice ..... ZADOVOLJAVA
- Oznake upozorenja, obavještenja i zabrane..... ZADOVOLJAVA
- Zvučna i svjetlosna signalizacija ..... ZADOVOLJAVA
- Stanje sigurnosnih uređaja za ograničenje (krajnji isključivači)..... ZADOVOLJAVA
- Stanje pneumatske instalacije..... ZADOVOLJAVA
- Stanje hidraulične instalacije..... ZADOVOLJAVA
- Stabilnost sredstva ..... ZADOVOLJAVA
- Kočioni mehanizam:..... ZADOVOLJAVA
- Antikorozivna zaštita..... ZADOVOLJAVA
- Tehnička dokumentacija..... ZADOVOLJAVA

III - PRIMJEDBE :

IV- OCJENA: Na osnovu rezultata izvršenih pregleda, mjerenja i ispitivanja konstatuje se da SU OBEZBIJEĐENE propisane mjere zaštite na radu na predmetnom sredstvu za rad.

V - NAPOMENA :

- Pregled i ispitivanje su izvršena u skladu sa Zakonom o zaštiti i zdravlju na radu („Sl. CG" br.:34/14),
- Pravilnika o postupku i rokovima za vršenje periodičnih pregleda i ispitivanja sredstava za rad, sredstava i opreme lične zaštite na radu i uslova radne sredine(„Sl. RCG" br.: 71/05);
- Stručni nalaz ima važnost 36 mjeseci ukoliko nije došlo do remonta sredstva za rad.
- Sredstvo za rad može održavati samo stručno lice mašinske struke uz korišćenje kvalitetnih rezervnih djelova

Dostavljeno :

"Naručiocu " – x2
a/a

Pregled i ispitivanje izvršili:

Šebek Branislav, dipl, el.inž
Draškovič Slobodan, dipl.el.inž
Brčić Marjan, dipl.maš.inž.
Popovič Vesna, dipl.inž.grad.

Ova kontrola/ispitivanje izvršeno je prema našem najboljem znanju i savjesti i odnosi se isključivo na stanje u vrijeme izvršenja naše kontrole. Stručni nalaz je dozvoljeno reprodukovati samo kao cjelinu uz dozvolu izdavača i isti je valjan ukoliko je originalne potpisan i pečatom ovjeren.

GEORGIOS KARKANIAS
PRESIDENT
3/12/18

iii) CONTRACTOR'S EQUIPMENT

The Tenderer shall provide adequate information to demonstrate clearly that it has the capability to meet the requirements for the key equipment listed in Volume I, Attachment 2 (Preliminary Programme). A separate Form shall be prepared for each item of equipment listed, or for alternative equipment proposed by the Tenderer. The Tenderer shall provide all the information requested below, to the extent possible. Fields with asterisk (*) shall be used for evaluation.

In case of a JVCA the form shall be submitted for each partner of the JVCA

Type of Equipment* CRANE		
Equipment Information	Name of manufacturer "FM GRU" S.R.L.	Model and power rating 1250 CTY , 24KW
	Capacity* 22m=3000kg / 50m=1200kg	Year of manufacture* 2002
Current Status	Current location PODGORICA, MONTENEGRO	
	Details of current commitments	
Source	Indicate source of the equipment ☐ Owned ☒ Rented ☐ Leased ☐ Specially manufactured	

The following information shall be provided only for equipment not owned by the Tenderer.

Owner	Name of owner IGP FIDIJA d.o.o.	
	Address of owner STARA VAROS, BLOCK 7, 81000 PODGORICA	
	Telephone +382 (0) 20 621140	Contact name and title Ivan Blagojevic, Director
	Fax	Telex
Agreements	Details of rental / lease / manufacture agreements specific to the project	
	Company IGP FIDIJA d.o.o. is owner of specific equipment and it is willing to dispose it based on the "Letter of Intent" signed between KARKANIAS ENVIRONMENTAL TECHNOLOGY S.A. and IGP FIDIJA d.o.o.	

GEORGIOS KARKANIAS
PRESIDENT

3/12/18

MONTINSPEKT d.o.o. Podgorica
TEHNIČKA ISPITIVANJA, KONTROLA KVALITETA I KVANTITETA, INŽENJERING
Podgorica, Bulevar Pera Ćetkovića 113; te/.fax: 020 656-920; 069 019 755; e-mail: montinspekt@t-com.me

S T R U Č N I N A L A Z

O PRIMJENI PROPISANIH MJERA I NORMATIVA ZAŠTITE NA RADU NA DIZALICI

BROJ: 517-01/04/16

Podgorica, 29.09.2016. god.

I - OPŠTI I TEHNIČKI PODACI:

VRSTA DIZALICE: GRAĐEVINSKA TORANJSKA DIZALICA- KRAN

LOKACIJA: Gradilište „STAMBENO POSLOVNI OBJEKAT " (UP br.77, DUP „Nova Varoš 2" Izmjene i dopune, Podgorica

KORISNIK: „IGP FIDIJA" doo- Podgorica

PROIZVOĐAČ: „FM GRU" S.R.L.

FABRIČKI BROJ : 12458

TIP: 1250.CTY

POGONSKA KLASA: II.

GODINA PROIZVODNJE: 2002

NAZIVNA NOSIVOST: 1200kg na 50m/3000kg na 22m.

UPRAVLJANJE: iz kabine.

VRSTA POGONA: Električni

IZVRŠNI DIREKTOR:
Sebek Branislav,dipl.el.ing.

Ova kontrola/ispitivanje izvršeno je prema našem najboljem znanju i savjesti i odnosi se isključivo na stanje u vrijeme izvršenja naše kontrole. Stručni nalaz je dozvoljeno reprodukovati samo kao cjelina uz dozvolu izdavača i isti je valjan ukoliko je originalno potpisan i pečatom ovjeren.

GEORGIOS KARKANIAS
PRESIDENT
3/12/18

II - REZULTATI PREGLEDA I ISPITIVANJA:

1. Kočenje: dizalice - Zadovoljava
mačke - Zadovoljava
dizanja - Zadovoljava

2. Krajnji sklјučivači: dizalice - Zadovoljava
mačke - Zadovoljava
dizanja - Zadovoljava

3. Statičko opterećenje: Zadovoljava
4. Dinamičko opterećenje: Zadovoljava
5. Stabilnost dizalice: Zadovoljava
6. Metalna konstrukcija: Zadovoljava
7. Antikoroziona zaštita: Zadovoljava
8. Natpisi i oznake: Zadovoljavaju
9. Električna instalacija: zaštita od direktnog dodira - zadovoljava
zaštita od indirektnog dodira - zadovoljava
otpor izolacije el. instalacije - zadovoljava
izjednačenje potencijala - zadovoljava
napojni vod i ostali kablovi - zadovoljava
glavna sklopka - zadovoljava
dizalična sklopka - zadovoljava
uređaji za upravljanje - zadovoljava

Tehnička dokumentacija: priložena
PRIMJEDBE :
DATUM PREGLEDA I ISPITIVANJA: 29.09.2016.god.

III - NAPOMENA :

A)Pregled i ispitivanje su izvršena u skladu sa Zakonom o zaštiti i zdravlju na radu(SL. RCG br.:34/14), i Pravilnika o postupku i rokovima za vršenje periodičnih pregleda i ispitivanja spedstava za rad, sredstava i opreme lične zaštite na radu i uslova radne sredine(SL. RCG br.: 71/05)

B) Stručni nalaz ima važnost 12 mjeseci ukoliko nije došlo do remonta i promjene lokacije sredstva za rad.

C) Sredstvo za rad može održavati samo stručno lice mašinske i elektro struke uz korišćenje kvalitetnih rezervnih djelova.

D) Uz stručni nalaz se nalazi i izvjestaj o ispitivanju dinamičkog modula deformacije.

IV - OCJENA: NA NAVEDENOM SREDSTVU ZA RAD SU OBEZBIJEĐENE PROPISANE MJERE I NORMATIVI ZAŠTITE NA RADU.

Dostavljeno :
"Naručiocu " – x2
a/a

Pregled i ispitivanje izvršili :

Šebek Branislav,dipl.el.ing.

Otašević Radoje, dipl.maš.ing.

Popović Vesna , dipl.grad.ing.

Draškovic Slobodan, Scc.znr.

"MONTINSPEKT" d.o.o. za usluge kontrole, proizvodnje i instaliranja PODGORICA

Ova kontrola/ispitivanje izvršeno je prema našem najboljem znanju i savjesti i odnosi se isključivo na stanje u vrijeme izvršenja naše kontrole. Stručni nalaz je dozvoljeno reprodukovati samo kao cjelinu uz dozvolu izdavača i isti je valjan ukoliko je originalno potpisan i pečatom ovjeren.

GEORGIOS KARKANIAS
PRESIDENT

3/12/18

Crna Gora

Ministarstvo rada i socijalnog staranja

Broj: 170-108/15-3
Podgorica, 05.01.2016. godine

Na osnovu člana 41 Zakona o zaštiti i zdravlju na radu ("Sl. list CG", br. 34/14), člana 2 i 12 Pravilnika o uslovima koje mora da ispunjava pravno ili fizičko lice za obavljanje stručnih poslova iz zaštite na radu i postupku za utvrđivanje ispunjenosti tih uslova ("Sl. list RĆG", br. 67/05), rješavajući po zahtjevu D.O.O. "MONTINSPEKT" Bulevar Pera Četkovića 113, Podgorica, broj 170-108/15-1 od 02.12.2015. godine, Ministarstvo rada i socijalnog staranja, donosi

R J E Š E N J E

OVLAŠĆUJE SE D.O.O. "MONTINSPEKT" Bulevar Pera Ćetkovića 113, Podgorica, da može obavljati sledeće poslove iz zaštite i zdravlja na radu i to:

1. izradu akta o procjeni rizika, sa predlogom mjera za njihovo otklanjanje,
2. periodične preglede i ispitivanja sredstava za rad, električnih i drugih instalacija i sredstava i opreme lične zaštite na radu,
3. ispitivanje uslova radne sredine: fizičkih štetnosti (buka), osvijetljenost i mikroklima,
4. reviziju (ocjenu) tehničke dokumentacije sa aspekta primijenjenosti mjera zaštite, tehničkih propisa i standarda, radi utvrđivanja obezbijeđenosti zaštite zaposlenih u objektima za koje je urađena tehnička dokumentacija, za procese rada koji će se obavljati u njima,
5. osposobljavanje i provjeru osposobljenosti za bezbjedan rad zaposlenih i
6. poslovi iz člana 40 Zakona o zaštiti i zdravlju na radu:
   - savjetuje poslodavca pri planiranju, izboru i održavanju sredstava za rad i sredstava i opreme za ličnu zaštitu na radu;
   - savjetuje poslodavca kod opremanja i uređivanja radnog mjesta, uzimajući u obzir i uslove radne sredine;
   - učestvuje u izradi stručne podloge za akt o procjeni rizika;
   - organizuje predhodna i periodična ispitivanja uslova radne sredine (hemijskih, fizičkih i bioloških štetnosti, mikroklime i osvijetljenosti);
   - organizuje periodične preglede i ispitivanje sredstava za rad, električnih i drugih instalacija;
   - predlaže mjere za poboljšanje uslova rada, naročito na radnim mjestima sa posebnim uslovima rada, odnosno povećanim rizicima;
   - na svim poslovima kod poslodavca prati primjenu mjera zaštite i održavanja sredstava za rad i sredstava i opreme za ličnu zaštitu na radu u ispravnom stanju;
   - obezbjeđuje uputstva za bezbjedan rad i kontroliše njihovu primjenu;

GEORGIOS KARKANIAS
PRESIDENT

3/12/18

iii) CONTRACTOR'S EQUIPMENT

The Tenderer shall provide adequate information to demonstrate clearly that it has the capability to meet the requirements for the key equipment listed in Volume I, Attachment 2 (Preliminary Programme). A separate Form shall be prepared for each item of equipment listed, or for alternative equipment proposed by the Tenderer. The Tenderer shall provide all the information requested below, to the extent possible. Fields with asterisk (*) shall be used for evaluation.

In case of a JVCA the form shall be submitted for each partner of the JVCA

Type of Equipment* CRANE		
Equipment Information	Name of manufacturer LIEBHERR WERK	Model and power rating 27 K , 18KW
	Capacity* 12,3m=3000kg / 30m=800kg	Year of manufacture* 1979
Current Status	Current location PODGORICA, MONTENEGRO	
	Details of current commitments	
Source	Indicate source of the equipment ☐ Owned ☒ Rented ☐ Leased ☐ Specially manufactured	

The following information shall be provided only for equipment not owned by the Tenderer.

Owner	Name of owner IGP FIDIJA d.o.o.	
	Address of owner STARA VAROS, BLOCK 7, 81000 PODGORICA	
	Telephone +382 (0) 20 621140	Contact name and title Ivan Blagojevic, Director
	Fax	Telex
Agreements	Details of rental / lease / manufacture agreements specific to the project	
	Company IGP FIDIJA d.o.o. is owner of specific equipment and it is willing to dispose it based on the "Letter of Intent" signed between KARKANIAS ENVIRONMENTAL TECHNOLOGY S.A. and IGP FIDIJA d.o.o.	

GEORGIOS KARKANIAS
PRESIDENT

3/12/18

MONTINSPEKT d.o.o. Podgorica
TEHNIČKA ISPITIVANJA, KONTROLA KVALITETA I KVANTITETA, INŽENJERING
Podgorica, Bulevar Pera Ćetkovića 113; tel./fax: 020 656-920; 069 019 755; e-mail: montinspekt@t-com.me

S T R U Č N I N A L A Z

O PRIMJENI PROPISANIH MJERA I NORMATIVA ZAŠTITE NA RADU NA DIZALICI

BROJ: PG/605-02/03/15

Podgorica, 19.10.2015. god.

I - OPŠTI I TEHNIČKI PODACI:

VRSTA DIZALICE: GRADEVINSKA DIZALICA

LOKACIJA: Gradilište „Izgradnja objekta za prečišćavanje procjednih voda" na UP br.6/2 koju čine KP 9/1 KO Tuzi u zahvatu Urbanističkog projekta „SANITARNA DEPONIJA SA RECIKLAŽNIM CENTROM" u Podgorici

KORISNIK: „IGP FIDIJA" doo- Podgorica

PROIZVOĐAČ: LIEBHERR WERK

FABRIČKI BROJ : 912709/63

TIP: 27 K

POGONSKA KLASA: II.

GODINA PROIZVODNJE: 1979

NAZIVNA NOSIVOST: 800kg na 30m/3000kg na 12,3m.

UPRAVLJANJE: iz kabine i daljinski.

VRSTA POGONA: Električni

IZVRŠNI DIREKTOR:
Šebek Branislav,dipl.el.ing.

Ova kontrola/ispitivanje izvršeno je prema našem najboljem znanju i savjesti i odnosi se isključivo na stanje u vrijeme izvršenja naše kontrole. Stručni nalaz je dozvoljeno reprodukovati samo kao cjelinu uz dozvolu izdavača i isti je valjan ukoliko je originalno potpisan i pečatom ovjeren

GEORGIOS KARKANIAS
PRESIDENT
3/12/18

Stručni nalaz br. PG/605-02/03/15

II - REZULTATI PREGLEDA I ISPITIVANJA:

1. Kočenje: dizalice - Zadovoljava
mačke - Zadovoljava
dizanja - Zadovoljava

2. Krajnji sklopčivači: dizalice - Zadovoljava
mačke - Zadovoljava
dizanja - Zadovoljava

3. Statičko opterećenje: Zadovoljava
4. Dinamičko opterećenje: Zadovoljava
5. Stabilnost dizalice: Zadovoljava
6. Metalna konstrukcija: Zadovoljava
7. Antikoroziona zaštita: Zadovoljava
8. Natpisi i oznake: Zadovoljavaju
9. Električna instalacija: zaštita od direktnog dodira - zadovoljava
zaštita od indirektnog dodira - zadovoljava
otpor izolacije el. instalacije - zadovoljava
izjednačenje potencijala - zadovoljava
napojni vod i ostali kablovi - zadovoljava
glavna sklopka - zadovoljava
dizalična sklopka - zadovoljava
uređaji za upravljanje - zadovoljava

Tehnička dokumentacija: priložena
PRIMJEDBE :
DATUM PREGLEDA I ISPITIVANJA: 19.10.2015.god.

III - NAPOMENA :

A)Pregled i ispitivanje su izvršena u skladu sa Zakonom o zaštiti i zdravlju na radu(SL. RCG br.:34/14), i Pravilnika o postupku i rokovima za vršenje periodičnih pregleda i ispitivanja spedstava za rad, sredstava i opreme lične zaštite na radu i uslova radne sredine(SL. RCG br.: 71/05)

B) Stručni nalaz ima važnost 36 mjeseci ukoliko nije došlo do remonta i promjene lokacije sredstva za rad.

C) Sredstvo za rad može održavati samo stručno lice mašinske i elektro struke uz korišćenje kvalitetnih rezervnih djelova.

D) Uz stručni nalaz se nalazi i izvjestaj o ispitivanju dinamičkog modula deformacije.

IV - OCJENA: NA NAVEDENOM SREDSTVU ZA RAD SU OBEZBIJEĐENE PROPISANE MJERE I NORMATIVI ZAŠTITE NA RADU.

Dostavljeno :
"Naručiocu " - x2
a/a

Pregled i ispitivanje izvršili :

Šcbek Branislav,dipl.el.ing.

Otašević Radoje, dipl.maš.ing.

Popović Vesna , dipl.grad.ing.

Drašković Slobodan, Sec.znr.

Ovu kontrolu/ispitivanje izvršeno je prema našem najboljem znanju i savjesti i odnosi se isključivo na stanje u vrijeme izvršenja naše kontrole. Stručni nalaz je dozvoljeno reprodukovati samo kao cjelinu uz dozvolu izdavača i isti je valjan ukoliko je originalno potpisan i pečatom ovjeren

GEORGIOS KARKANIAS
PRESIDENT
3/12/18

Crna Gora

Ministarstvo rada i socijalnog staranja

Broj: 170-21/2012-4
Podgorica, 08.01.2013. godine

Ministarstvo rada i socijalnog staranja rješavajući po zahtjevu "MONTINSPEKT" D.O.O. ul. Pete Proleterske br. 259 Podgorica, broj 170-27/2012-1 od 06.11.2012. godine na osnovu člana 37 Zakona o zaštiti na radu ("Službeni list RCG", br. 79/04 i "Službeni list CG", br. 26/10), u vezi sa članom 12 Pravilnika o uslovima koje mora da ispunjava pravno ili fizičko lice za obavljanje stručnih poslova iz zaštite na radu i postupku za utvrđivanje ispunjenosti tih uslova ("Službeni list RCG", br. 67/05), donosi

RJEŠENJE

OVLAŠĆUJE SE "MONTINSPEKT" D.O.O. ul. Pete Proleterske br. 259 Podgorica, da može obavljati sljedeće poslove iz zaštite na radu:

1. pripreme akata o procjeni rizika, sa predlogom mjera za njihovo otklanjanje,
2. periodične preglede i ispitivanja opreme za rad i sredstava za rad, električnih i drugih instalacija i sredstava i opreme lične zaštite na radu,
3. ispitivanje uslova radne sredine: fizičkih štetnosti (buka), osvijetljenost i mikroklima,
4. reviziju (ocjenu) tehničke dokumentacije sa aspekta primijenjenosti preventivnih mjera zaštite na radu, tehničkih propisa i standarda, radi utvrđivanja obezbijeđenosti zaštite zaposlenih u objektima za koje je urađena tehnička dokumentacija, za procese rada koji će se obavljati u njima,
5. osposobljavanje i provjeru osposobljenosti za bezbjedan rad zaposlenih i
6. poslovi iz člana 36 Zakona o zaštiti na radu;

- savjetovanje poslodavca pri planiranju, izboru i održavanju sredstava za rad i sredstava i opreme za ličnu zaštitu na radu;
- savjetovanje poslodavca kod opremanja i uređivanja radnog mjesta, uzimajući u obzir i uslove radne sredine;
- učestvovanje u izradi stručne podloge za akt o procjeni rizika;
- organizovanje prethodnih i periodičnih ispitivanja uslova radne sredine (fizičkih, hemijskih, bioloških štetnosti, mikroklime i osvijetljenosti);
- organizovanje periodičnih pregleda i ispitivanja sredstava za rad, električnih i drugih instalacija;
- predlaganje mjera za poboljšanje uslova rada, naročito na radnim mjestima sa povećanim rizicima;
- na svim poslovima kod poslodavca praćenje primjene mjera za zaštitu na radu i održavanje sredstava za rad u ispravnom stanju i sredstava i opreme za ličnu zaštitu na radu;
- obezbjeđivanje uputstava za bezbjedan rad i kontrolisanje njihove primjene;

GEORGIOS KARKANIAS
PRESIDENT

3/12/18

iii) CONTRACTOR'S EQUIPMENT

The Tenderer shall provide adequate information to demonstrate clearly that it has the capability to meet the requirements for the key equipment listed in Volume I, Attachment 2 (Preliminary Programme). A separate Form shall be prepared for each item of equipment listed, or for alternative equipment proposed by the Tenderer. The Tenderer shall provide all the information requested below, to the extent possible. Fields with asterisk (*) shall be used for evaluation.

In case of a JVCA the form shall be submitted for each partner of the JVCA

Type of Equipment* CRANE		
Equipment Information	Name of manufacturer LIEBHERR-WERKE BIBERACH GES	Model and power rating LA07184/27K , 18KW
	Capacity* MAX=3000kg / 30m=750kg	Year of manufacture* 1980
Current Status	Current location PODGORICA, MONTENEGRO	
	Details of current commitments	
Source	Indicate source of the equipment ☐ Owned ☒ Rented ☐ Leased ☐ Specially manufactured	

The following information shall be provided only for equipment not owned by the Tenderer.

Owner	Name of owner IGP FIDIJA d.o.o.	
	Address of owner STARA VAROS, BLOCK 7, 81000 PODGORICA	
	Telephone +382 (0) 20 621140	Contact name and title Ivan Blagojevic, Director
	Fax	Telex
Agreements	Details of rental / lease / manufacture agreements specific to the project	
	Company IGP FIDIJA d.o.o. is owner of specific equipment and it is willing to dispose it based on the "Letter of Intent" signed between KARKANIAS ENVIRONMENTAL TECHNOLOGY S.A. and IGP FIDIJA d.o.o.	

GEORGIOS KARKANIAS
PRESIDENT

3/12/18

MONTINSPEKT d.o.o. Podgorica
TEHNIČKA ISPITIVANJA, KONTROLA KVALITETA I KVANTITETA, INŽENJERING
Podgorica, Bulevar Pera Ćetkovića 113; te/.fax: 020 656-920; 069 019 755; e-mail: montinspekt@t-com.me

S T R U Č N I N A L A Z

O PRIMJENI PROPISANIH MJERA I NORMATIVA ZAŠTITE NA RADU NA DIZALICI

BROJ: 517-02/04/16

Podgorica, 29.09.2016. god.

I - OPŠTI I TEHNIČKI PODACI:

VRSTA DIZALICE: GRAĐEVINSKA DIZALICA

LOKACIJA: Magacinsko skladište Zagorič- Podgorica

KORISNIK: „IGP FIDIJA" doo- Podgorica

PROIZVOĐAČ: " LIEBHERR-WERKE BIBERACH GES "- Njemačka

FABRIČKI BROJ: " 012708/21 "

MODEL/TIP: " LA07184/27K "

MAX.NOSIVOST: 3000 kg/ NA KRAJU RUKE: 750 kg

GODINA PROIZVODNJE: 1980

INTERNI BROJ:

UPRAVLJANJE: iz kabine i daljinski.

VRSTA POGONA: Električni

D.O.O. za usluge kontrole, prometa i inženjeringa "MONTINSPEKT" PODGORICA

IZVRŠNI DIREKTOR:
Šebek Branislav,dipl.el.ing.

Ova kontrola/ispitivanje izvršeno je prema našem najboljem znanju i savjesti i odnosi se isključivo na stanje u vrijeme izvršenja naše kontrole. Stručni nalaz je dozvoljeno reprodukovati samo kao cjelinu uz dozvolu izdavača i isti je valjan ukoliko je originalno potpisan i pečatom ovjeren.

3/12/18

GEORGIOS KARKANIAS
PRESIDENT

Stručni nalaz br. 517-02/04/16

II - REZULTATI PREGLEDA I ISPITIVANJA:

1. Kočenje: dizalice - Zadovoljava
mačke - Zadovoljava
dizanja - Zadovoljava

2. Krajnji sključivači: dizalice - Zadovoljava
mačke - Zadovoljava
dizanja - Zadovoljava

3. Statičko opterećenje: Zadovoljava
4. Dinamičko opterećenje: Zadovoljava
5. Stabilnost dizalice: Zadovoljava
6. Metalna konstrukcija: Zadovoljava
7. Antikoroziona zaštita: Zadovoljava
8. Natpisi i oznake: Zadovoljavaju
9. Električna instalacija: zaštita od direktnog dodira - zadovoljava
zaštita od indirektnog dodira - zadovoljava
otpor izolacije el. instalacije - zadovoljava
izjednačenje potencijala - zadovoljava
napojni vod i ostali kablovi - zadovoljava
glavna sklopka - zadovoljava
dizalična sklopka - zadovoljava
uređaji za upravljanje - zadovoljava

Tehnička dokumentacija: priložena
PRIMJEDBE :
DATUM PREGLEDA I ISPITIVANJA: 29.09.2016.god.

III - NAPOMENA :

A)Pregled i ispitivanje su izvršena u skladu sa Zakonom o zaštiti i zdravlju na radu(SL. RCG br.:34/14), i Pravilnika o postupku i rokovima za vršenje periodičnih pregleda i ispitivanja spedstava za rad, sredstava i opreme lične zaštite na radu i uslova radne sredine(SL. RCG br.: 71/05)
B) Stručni nalaz ima važnost 36 mjeseci ukoliko nije došlo do remonta i promjene lokacije sredstva za rad.
C) Sredstvo za rad može održavati samo stručno lice mašinske i elektro struke uz korišćenje kvalitetnih rezervnih djelova.
D) Uz stručni nalaz se nalazi i izvjestaj o ispitivanju dinamičkog modula deformacije.

IV - OCJENA: NA NAVEDENOM SREDSTVU ZA RAD SU OBEZBIJEĐENE PROPISANE MJERE I NORMATIVI ZAŠTITE NA RADU.

Dostavljeno :
"Naručiocu " – x2
a/a

Pregled i ispitivanje izvršili :

Šebek Branislav,dipl.el.ing.
Otašević Radoje, dipl.maš.ing.
Popović Vesna , dipl.građ.ing.
Drašković Slobodan, Scc.znr.

D.O.O. za usluge kontrole, prometa i inž. djelatn. "MONTINSPEKT" PODGORICA

Ova kontrola/ispitivanje izvršeno je prema našem najboljem znanju i savjesti i odnosi se isključivo na stanje u vrijeme izvršenja naše kontrole. Stručni nalaz je dozvoljeno reprodukovati samo kao cjelinu uz dozvolu izdavača i isti je valjan ukoliko je originalno potpisan i pečatom ovjeren.

3/12/18

GEORGIOS KARKANIAS
PRESIDENT

Crna Gora

Ministarstvo rada i socijalnog staranja

Broj: 170-108/15-3
Podgorica, 05.01.2016. godine

Na osnovu člana 41 Zakona o zaštiti i zdravlju na radu ("Sl. list CG", br. 34/14), člana 2 i 12 Pravilnika o uslovima koje mora da ispunjava pravno ili fizičko lice za obavljanje stručnih poslova iz zaštite na radu i postupku za utvrđivanje ispunjenosti tih uslova ("Sl. list RCG", br. 67/05), rješavajući po zahtjevu D.O.O. "MONTINSPEKT" Bulevar Pera Ćetkovića 113, Podgorica, broj 170-108/15-1 od 02.12.2015. godine, Ministarstvo rada i socijalnog staranja, donosi

R J E Š E N J E

OVLAŠĆUJE SE D.O.O. "MONTINSPEKT" Bulevar Pera Ćetkovića 113, Podgorica, da može obavljati sledeće poslove iz zaštite i zdravlja na radu i to:

1. izradu akta o procjeni rizika, sa predlogom mjera za njihovo otklanjanje,
2. periodične preglede i ispitivanja sredstava za rad, električnih i drugih instalacija i sredstava i opreme lične zaštite na radu,
3. ispitivanje uslova radne sredine: fizičkih štetnosti (buka), osvijetljenost i mikroklima,
4. reviziju (ocjenu) tehničke dokumentacije sa aspekta primijenjenosti mjera zaštite, tehničkih propisa i standarda, radi utvrđivanja obezbijeđenosti zaštite zaposlenih u objektima za koje je urađena tehnička dokumentacija, za procese rada koji će se obavljati u njima,
5. osposobljavanje i provjeru osposobljenosti za bezbjedan rad zaposlenih i
6. poslovi iz člana 40 Zakona o zaštiti i zdravlju na radu:
   - savjetuje poslodavca pri planiranju, izboru i održavanju sredstava za rad i sredstava i opreme za ličnu zaštitu na radu;
   - savjetuje poslodavca kod opremanja i uređivanja radnog mjesta, uzimajući u obzir i uslove radne sredine;
   - učestvuje u izradi stručne podloge za akt o procjeni rizika;
   - organizuje predhodna i periodična ispitivanja uslova radne sredine (hemijskih, fizičkih i bioloških štetnosti, mikroklime i osvijetljenosti);
   - organizuje periodične preglede i ispitivanje sredstava za rad, električnih i drugih instalacija;
   - predlaže mjere za poboljšanje uslova rada, naročito na radnim mjestima sa posebnim uslovima rada, odnosno povećanim rizicima;
   - na svim poslovima kod poslodavca prati primjenu mjera zaštite i održavanja sredstava za rad i sredstava i opreme za ličnu zaštitu na radu u ispravnom stanju;
   - obezbjeđuje uputstva za bezbjedan rad i kontroliše njihovu primjenu;

GEORGIOS KARKANIAS
PRESIDENT
3/12/18

iii) CONTRACTOR'S EQUIPMENT

The Tenderer shall provide adequate information to demonstrate clearly that it has the capability to meet the requirements for the key equipment listed in Volume I, Attachment 2 (Preliminary Programme). A separate Form shall be prepared for each item of equipment listed, or for alternative equipment proposed by the Tenderer. The Tenderer shall provide all the information requested below, to the extent possible. Fields with asterisk (*) shall be used for evaluation.

In case of a JVCA the form shall be submitted for each partner of the JVCA

Type of Equipment* TRANSPORT VEHICLE		
Equipment Information	Name of manufacturer DAIMLER CHRYSLER	Model and power rating ACTROS 3241 , 300KW
	Capacity* 17600 Kg, V=13 m3	Year of manufacture* 2004
Current Status	Current location BIJELO POLJE, MONTENEGRO	
	Details of current commitments	
Source	Indicate source of the equipment ☐ Owned ☒ Rented ☐ Leased ☐ Specially manufactured	

The following information shall be provided only for equipment not owned by the Tenderer.

Owner	Name of owner IGP FIDIJA d.o.o.	
	Address of owner STARA VAROS, BLOCK 7, 81000 PODGORICA	
	Telephone +382 (0) 20 621140	Contact name and title Ivan Blagojevic, Director
	Fax	Telex
Agreements	Details of rental / lease / manufacture agreements specific to the project	
	Company IGP FIDIJA d.o.o. is owner of specific equipment and it is willing to dispose it based on the "Letter of Intent" signed between KARKANIAS ENVIRONMENTAL TECHNOLOGY S.A. and IGP FIDIJA d.o.o.	

GEORGIOS KARKANIAS
PRESIDENT

3/12/18

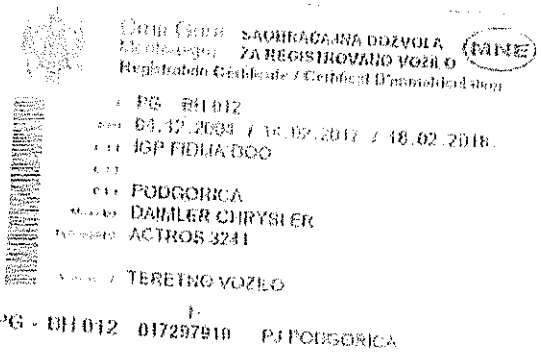

GEORGIOS KARKANIAS
PRESIDENT

3/12/18

SDV

GEORGIOS KARKANIAS
PRESIDENT

3/12/18

iii) CONTRACTOR'S EQUIPMENT

The Tenderer shall provide adequate information to demonstrate clearly that it has the capability to meet the requirements for the key equipment listed in Volume I, Attachment 2 (Preliminary Programme). A separate Form shall be prepared for each item of equipment listed, or for alternative equipment proposed by the Tenderer. The Tenderer shall provide all the information requested below, to the extent possible. Fields with asterisk (*) shall be used for evaluation.

In case of a JVCA the form shall be submitted for each partner of the JVCA

Type of Equipment* TRANSPORT VEHICLE		
Equipment Information	Name of manufacturer VOLVO / (MEILLER)	Model and power rating FH 16-520 , 385KW
	Capacity* 27300 Kg, V=22m3	Year of manufacture* 2000
Current Status	Current location PODGORICA, MONTENEGRO	
	Details of current commitments	
Source	Indicate source of the equipment ☐ Owned ☒ Rented ☐ Leased ☐ Specially manufactured	

The following information shall be provided only for equipment not owned by the Tenderer.

Owner	Name of owner IGP FIDIJA d.o.o.	
	Address of owner STARA VAROS, BLOCK 7, 81000 PODGORICA	
	Telephone +382 (0) 20 621140	Contact name and title Ivan Blagojevic, Director
	Fax	Telex
Agreements	Details of rental / lease / manufacture agreements specific to the project	
	Company IGP FIDIJA d.o.o. is owner of specific equipment and it is willing to dispose it based on the "Letter of Intent" signed between KARKANIAS ENVIRONMENTAL TECHNOLOGY S.A. and IGP FIDIJA d.o.o.	

GEORGIOS KARKANIAS
PRESIDENT

3/12/18

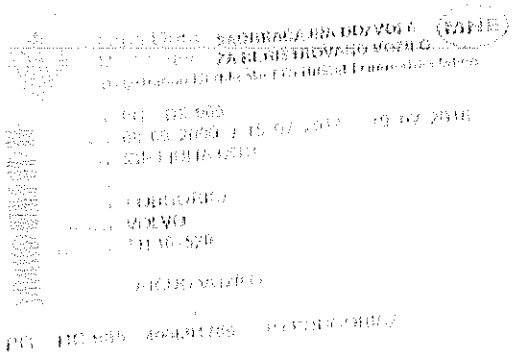

GEORGIOS KARKANIAS
PRESIDENT

3/12/18

SDV

GEORGIOS KARKANIAS
PRESIDENT

31/12/18

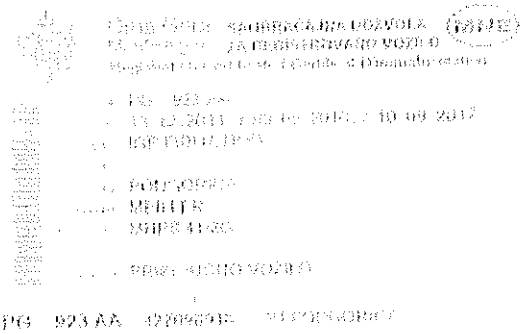

GEORGIOS KARKANIAS
PRESIDENT

3/12/18

[illegible]	[illegible]
[illegible]	[illegible]
[illegible]	[illegible]
[illegible]	1
[illegible]	
[illegible]	
[illegible]	SIVA
[illegible]	
[illegible]	[illegible]

SDV

GEORGIOS KARKAINAS
PRESIDENT

3/12/18

iii) CONTRACTOR'S EQUIPMENT

The Tenderer shall provide adequate information to demonstrate clearly that it has the capability to meet the requirements for the key equipment listed in Volume I, Attachment 2 (Preliminary Programme). A separate Form shall be prepared for each item of equipment listed, or for alternative equipment proposed by the Tenderer. The Tenderer shall provide all the information requested below, to the extent possible. Fields with asterisk (*) shall be used for evaluation.

In case of a JVCA the form shall be submitted for each partner of the JVCA

Type of Equipment* TRANSPORT VEHICLE		
Equipment Information	Name of manufacturer MERCEDES BENZ	Model and power rating 4146K 8X4 , 300KW
	Capacity* 16700 Kg, V= 20 m3	Year of manufacture* 2004
Current Status	Current location PODGORICA, MONTENEGRO	
	Details of current commitments	
Source	Indicate source of the equipment ☐ Owned ☒ Rented ☐ Leased ☐ Specially manufactured	

The following information shall be provided only for equipment not owned by the Tenderer.

Owner	Name of owner IGP FIDIJA d.o.o.	
	Address of owner STARA VAROS, BLOCK 7, 81000 PODGORICA	
	Telephone +382 (0) 20 621140	Contact name and title Ivan Blagojevic, Director
	Fax	Telex
Agreements	Details of rental / lease / manufacture agreements specific to the project	
	Company IGP FIDIJA d.o.o. is owner of specific equipment and it is willing to dispose it based on the "Letter of Intent" signed between KARKANIAS ENVIRONMENTAL TECHNOLOGY S.A. and IGP FIDIJA d.o.o.	

GEORGIOS KARKANIAS
PRESIDENT
3/12/18

Crna Gora SAOBRAĆAJNA DOZVOLA (MNE)
Montenegro ZA REGISTROVANO VOZILO
Registration Certificate / Certificat D'immatriculation

A	PG - FP 587
[illegible]	10.01.2009. / 09.02.2017 / 04.02.2018.
C.1.1	IGP FIDIJA DOO
C.1.2	
C.1.3	PODGORICA
[illegible]	MERCEDES BENZ
[illegible]	4146K 8X4
[illegible]	TERETNO VOZILO

PG - FP 587 869996042 PJ PODGORICA

[illegible]	D.3	
[illegible]	E	WDB9333041K949923
[illegible]	F.1	16700
[illegible]	G	14300
[illegible]	[illegible]	4
[illegible]	P.1/P.2	11946 / 300
[illegible]	P.3	NAFTA
[illegible]	K	BIJELA
[illegible]	S.1/S.2	2
[illegible]		2004

SDV

GEORGIOS KARRANIAS
PRESIDENT

3/12/18

iii) CONTRACTOR'S EQUIPMENT

The Tenderer shall provide adequate information to demonstrate clearly that it has the capability to meet the requirements for the key equipment listed in Volume I, Attachment 2 (Preliminary Programme). A separate Form shall be prepared for each item of equipment listed, or for alternative equipment proposed by the Tenderer. The Tenderer shall provide all the information requested below, to the extent possible. Fields with asterisk (*) shall be used for evaluation.

In case of a JVCA the form shall be submitted for each partner of the JVCA

Type of Equipment* TRANSPORT VEHICLE		
Equipment Information	Name of manufacturer MERCEDES BENZ	Model and power rating 4146K 8X4 , 335KW
	Capacity* 26273 Kg, V= 20 m3	Year of manufacture* 2007
Current Status	Current location BIJELA, TIVAT, MONTENEGRO	
	Details of current commitments	
Source	Indicate source of the equipment ☐ Owned ☒ Rented ☐ Leased ☐ Specially manufactured	

The following information shall be provided only for equipment not owned by the Tenderer.

Owner	Name of owner IGP FIDIJA d.o.o.	
	Address of owner STARA VAROS, BLOCK 7, 81000 PODGORICA	
	Telephone +382 (0) 20 621140	Contact name and title Ivan Blagojevic, Director
	Fax	Telex
Agreements	Details of rental / lease / manufacture agreements specific to the project	
	Company IGP FIDIJA d.o.o. is owner of specific equipment and it is willing to dispose it based on the "Letter of Intent" signed between KARKANIAS ENVIRONMENTAL TECHNOLOGY S.A. and IGP FIDIJA d.o.o.	

GEORGIOS ~~KARKANIAS~~
PRESIDENT

3/12/18

Crna Gora
Montenegro

SAOBRAĆAJNA DOZVOLA
ZA REGISTROVANO VOZILO

MNE

Registration Certificate / Certificat D'immatriculation

A PG - FR 430

B/H 14.01.2008. / 03.04.2017. / 27.03.2018.

C.1.1 IGP FIDIJA DOO

C.1.2

C.1.3 PODGORICA

Marka D1 MERCEDES BENZ

Tip/model D2 4146K 8X4

Vrsta voz. J TERETNO VOZILO

PG - FR 430 9260961162 PJ PODGORICA

GEORGIOS ~~KARKANIAS~~
PRESIDENT

3/12/18

Identifikacijska oznaka vozila	D.5	WDB9323151L290341
Broj sedišta	S	
Dozvoljena najveća masa	F.1	26273
Masa praznog vozila	G	14727
Broj osovina	L	4
Zapremina/snaga motora	P.1/P.2	11946 / 335
Vrsta goriva	P.3	NAFTA
Boja vozila	R	BIJELA PLAVA
Broj mjesta za stajanje	S.1/S.2	2
Godina proizvodnje		2007

SDV

GEORGIOS ~~KARKANIAS~~
PRESIDENT

3/12/18

iii) CONTRACTOR'S EQUIPMENT

The Tenderer shall provide adequate information to demonstrate clearly that it has the capability to meet the requirements for the key equipment listed in Volume I, Attachment 2 (Preliminary Programme). A separate Form shall be prepared for each item of equipment listed, or for alternative equipment proposed by the Tenderer. The Tenderer shall provide all the information requested below, to the extent possible. Fields with asterisk (*) shall be used for evaluation.

In case of a JVCA the form shall be submitted for each partner of the JVCA

Type of Equipment* TRANSPORT VEHICLE		
Equipment Information	Name of manufacturer FAP	Model and power rating 1213/43-KK , 96KW
	Capacity* 6720 Kg, V= 8 m3	Year of manufacture* 1986
Current Status	Current location PODGORICA, MONTENEGRO	
	Details of current commitments	
Source	Indicate source of the equipment ☐ Owned ☒ Rented ☐ Leased ☐ Specially manufactured	

The following information shall be provided only for equipment not owned by the Tenderer.

Owner	Name of owner IGP FIDIJA d.o.o.	
	Address of owner STARA VAROS, BLOCK 7, 81000 PODGORICA	
	Telephone +382 (0) 20 621140	Contact name and title Ivan Blagojevic, Director
	Fax	Telex
Agreements	Details of rental / lease / manufacture agreements specific to the project	
	Company IGP FIDIJA d.o.o. is owner of specific equipment and it is willing to dispose it based on the "Letter of Intent" signed between KARKANIAS ENVIRONMENTAL TECHNOLOGY S.A. and IGP FIDIJA d.o.o.	

GEORGIOS KARKANIAS
PRESIDENT
3/12/18

Crna Gora SAOBRAĆAJNA DOZVOLA MNE
Montenegro ZA REGISTROVANO VOZILO
Registration Certificate / Certificat D'immatriculation

A PG - BA 860
B/I/H 24.06.1987. / 23.11.2016. / 08.11.2017.
C.1.1 IGP FIDIJA DOO
C.1.2
C.1.3 PODGORICA
Marka D1 FAP
Tip/model D2 1213/43-KK

Vrsta voz. J TERETNO VOZILO

PG - BA 860 858593682 PJ PODGORICA

GEORGIOS KARAMIAS
PRESIDENT
3/12/18

Komercijalni opis	D.3	
Broj šasije	E	3670051300360 6
Dozvoljena nosivost	F.1	6720
Masa praznog vozila	G	5080
Broj osovina	L	2
Zapremina/snaga motora	P.1/P.2	5675 / 96
Vrsta goriva	P.3	NAFTA
Boja vozila	R	ŽUTA
Broj mjesta za sjed/staj	S.1/S.2	2
Godina proizvodnje		1986

A: Registarska oznaka
B/F/I: Datum prve registracije / Datum registracije / Datum do kog važi saobraćajna dozvola
C.1.1: Prezime C.1.2: Ime C.1.3: Prebivalište

SDV

GEORGIOS KARKARIAS
PRESIDENT

3/12/18

iii) CONTRACTOR'S EQUIPMENT

The Tenderer shall provide adequate information to demonstrate clearly that it has the capability to meet the requirements for the key equipment listed in Volume I, Attachment 2 (Preliminary Programme). A separate Form shall be prepared for each item of equipment listed, or for alternative equipment proposed by the Tenderer. The Tenderer shall provide all the information requested below, to the extent possible. Fields with asterisk (*) shall be used for evaluation.

In case of a JVCA the form shall be submitted for each partner of the JVCA

Type of Equipment* TRANSPORT VEHICLE		
Equipment Information	Name of manufacturer MERCEDES BENZ	Model and power rating 914K , 97KW
	Capacity* 4240 Kg, V= 3 m3	Year of manufacture* 1992
Current Status	Current location PODGORICA, MONTENEGRO	
	Details of current commitments	
Source	Indicate source of the equipment ☐ Owned ☒ Rented ☐ Leased ☐ Specially manufactured	

The following information shall be provided only for equipment not owned by the Tenderer.

Owner	Name of owner IGP FIDIJA d.o.o.	
	Address of owner STARA VAROS, BLOCK 7, 81000 PODGORICA	
	Telephone +382 (0) 20 621140	Contact name and title Ivan Blagojevic, Director
	Fax	Telex
Agreements	Details of rental / lease / manufacture agreements specific to the project	
	Company IGP FIDIJA d.o.o. is owner of specific equipment and it is willing to dispose it based on the "Letter of Intent" signed between KARKANIAS ENVIRONMENTAL TECHNOLOGY S.A. and IGP FIDIJA d.o.o.	

GEORGIOS KARKANIAS
PRESIDENT

3/12/18

Crna Gora SAOBRAĆAJNA DOZVOLA
Montenegro ZA REGISTROVANO VOZILO
Registration Certificate / Certificat D'immatriculation

MNE

A PG - BE 885
B 11.11.2008. / 15.03.2017. / 13.03.2018.
C.1.1 IGP FIDIJA DOO
C.1.2
C.1.3 PODGORICA
D.1 MERCEDES BENZ
D.2 914 K
J TERETNO VOZILO

PG - BE 885 600292241 PJ PODGORICA

Kategorija vozila	D.3	
Broj šasije	E	WDB6740441 5814594
Dozvoljena nosivost	F.1	4240
Masa praznog vozila	G	4960
Broj osovina	L	2
Zapremina radnog motora	P.1/P.3	5958 / 97
Vrsta goriva	P.3	NAFTA
Boja vozila	R	BIJELA PLAVA
Broj mjesta za sjedenje	S.1/S.2	3
Godina proizvodnje		1992

SDV

GEORGIOS KARKANIAS
PRESIDENT

3/12/18

iii) CONTRACTOR'S EQUIPMENT

The Tenderer shall provide adequate information to demonstrate clearly that it has the capability to meet the requirements for the key equipment listed in Volume I, Attachment 2 (Preliminary Programme). A separate Form shall be prepared for each item of equipment listed, or for alternative equipment proposed by the Tenderer. The Tenderer shall provide all the information requested below, to the extent possible. Fields with asterisk (*) shall be used for evaluation.

In case of a JVCA the form shall be submitted for each partner of the JVCA

Type of Equipment* VIBRATORY PLATE		
Equipment Information	Name of manufacturer MASALTA ENGINEERING Co	Model and power rating No303, "MR 68H", 2.2KW
	Capacity* 68Kg	Year of manufacture* 2012
Current Status	Current location PODGORICA, MONTENEGRO	
	Details of current commitments	
Source	Indicate source of the equipment ☐ Owned ☒ Rented ☐ Leased ☐ Specially manufactured	

The following information shall be provided only for equipment not owned by the Tenderer.

Owner	Name of owner IGP FIDIJA d.o.o.	
	Address of owner STARA VAROS, BLOCK 7, 81000 PODGORICA	
	Telephone +382 (0) 20 621140	Contact name and title Ivan Blagojevic, Director
	Fax	Telex
Agreements	Details of rental / lease / manufacture agreements specific to the project	
	Company IGP FIDIJA d.o.o. is owner of specific equipment and it is willing to dispose it based on the "Letter of Intent" signed between KARKANIAS ENVIRONMENTAL TECHNOLOGY S.A. and IGP FIDIJA d.o.o.	

GEORGIOS KARKANIAS
PRESIDENT

3/12/18

MONTINSPEKT d.o.o. Podgorica
TEHNIČKA ISPITIVANJA, KONTROLA KVALITETA I KVANTITETA, INŽENJERING
Podgorica, Bulevar Pera Ćetkovića 113; tel./fax: 020 656-920; 069 019 755; e-mail: montinspekt@t-com.me

Broj: 386-03/04/17
Podgorica, 18.08.2017. god.

STRUČNI NALAZ
O PREGLEDU I ISPITIVANJU SREDSTVA ZA RAD

SREDSTVO ZA RAD: **VIBRO NABIJAČ**
NARUČILAC/VLASNIK : " **IGP FIDIJA** " **D.O.O.** Podgorica
MJESTO I DATUM PREGLEDA I ISPITIVANJA: Podgorica , 18.08.2017.god.

I - A/ OPŠTI PODACI -

Proizvođač: " Masalta Engineering Co "- China
Tip: " MR 68H"
Fabr.br.: HO684121124
Interni broj: 303
God.proizvodnje:2012
Pogon: 4-otaktni benzinski motor
Upravljanje: Ručno

II - REZULTATI PREGLEDA I ISPITIVANJA:

- Stanje pogonskog i prenosnog mehanizma	**ZADOVOLJAVA**
- Stanje kontrolnih uređaja	**ZADOVOLJAVA**
- Stanje uređaja za uključenje, upravljanje i isključenje	**ZADOVOLJAVA**
- Antikorozivna zaštita	**ZADOVOLJAVA**
- Stanje metalne konstrukcije	**ZADOVOLJAVA**

III - NAPOMENA :

A)Pregled i ispitivanje su izvršena u skladu sa Zakonom o zaštiti i zdravlju na radu (SL. CG br.:34/14) i Pravilnika o postupku i rokovima za vršenje periodičnih pregleda i ispitivanja spedstava za rad, sredstava i opreme lične zaštite na radu i uslova radne sredine (SL. RCG br.: 71/05)
B) Stručni nalaz ima važnost 36 mjeseci ukoliko nije došlo do remonta sredstva za rad.
C) Sredstvo za rad može održavati samo stručno lice mašinske struke uz korišćenje kvalitetnih rezervnih djelova.

IV - OCJENA: NA NAVEDENOM SREDSTVU ZA RAD SU OBEZBIJEĐENE PROPISANE MJERE I NORMATIVI ZAŠTITE NA RADU.

V - NAPOMENA :

Pregled i ispitivanje su izvršena u skladu sa Zakonom o zaštiti i zdravlju na radu („Sl. CG" br.:34/14),
- Pravilnika o postupku i rokovima za vršenje periodičnih pregleda i ispitivanja sredstava za rad, sredstava i opreme lične zaštite na radu i uslova radne sredine(„Sl. RCG" br.: 71/05);
- Stručni nalaz ima važnost 36 mjeseci ukoliko nije došlo do remonta sredstva za rad.
- Sredstvo za rad može održavati samo stručno lice mašinske i elektro struke uz korišćenje kvalitetnih rezervnih djelova.

Dostavljeno :

"Naručiocu " - x2
a/a

Pregled i ispitivanje izvršili:

Šebek Branislav, dipl, el.inž.

Drašković Slobodan, dipl.el.inž

Brčić Marjan, dipl.maš.inž.

Popović Vesna, dipl.inž.grad.

MONTINSPEKT d.o.o. Podgorica

Ova kontrola/ispitivanje izvršeno je prema našem najboljem znanju i savjesti i odnosi se isključivo na stanje u vrijeme izvršenja naše kontrole. Stručni nalaz je dozvoljeno reprodukovati samo kao cjelinu uz dozvolu izdavača i isti je valjan ukoliko je originalno potpisan i pečatom ovjeren.

GEORGIOS KARKANIAS
PRESIDENT
3/12/18

iii) CONTRACTOR'S EQUIPMENT

The Tenderer shall provide adequate information to demonstrate clearly that it has the capability to meet the requirements for the key equipment listed in Volume I, Attachment 2 (Preliminary Programme). A separate Form shall be prepared for each item of equipment listed, or for alternative equipment proposed by the Tenderer. The Tenderer shall provide all the information requested below, to the extent possible. Fields with asterisk (*) shall be used for evaluation.

In case of a JVCA the form shall be submitted for each partner of the JVCA

Type of Equipment* VIBRATORY PLATE		
Equipment Information	Name of manufacturer MASALTA ENGINEERING Co	Model and power rating No384, "MR 68H", 2.2KW
	Capacity* 68Kg	Year of manufacture* 2012
Current Status	Current location PODGORICA, MONTENEGRO	
	Details of current commitments	
Source	Indicate source of the equipment ☐ Owned ☒ Rented ☐ Leased ☐ Specially manufactured	

The following information shall be provided only for equipment not owned by the Tenderer.

Owner	Name of owner IGP FIDIJA d.o.o.	
	Address of owner STARA VAROS, BLOCK 7, 81000 PODGORICA	
	Telephone +382 (0) 20 621140	Contact name and title Ivan Blagojevic, Director
	Fax	Telex
Agreements	Details of rental / lease / manufacture agreements specific to the project	
	Company IGP FIDIJA d.o.o. is owner of specific equipment and it is willing to dispose it based on the "Letter of Intent" signed between KARKANIAS ENVIRONMENTAL TECHNOLOGY S.A. and IGP FIDIJA d.o.o.	

GEORGIOS KARKANIAS
PRESIDENT
3/12/18

MONTINSPEKT d.o.o. Podgorica
TEHNIČKA ISPITIVANJA, KONTROLA KVALITETA I KVANTITETA, INŽENJERING
Podgorica, Bulevar Pera Ćetkovića 113; tel./fax: 020 656-920; 069 019 755; e-mail: montinspekt@t-com.me

Broj: 386-06/04/17

Podgorica, 18.08.2017. god.

STRUČNI NALAZ
O PREGLEDU I ISPITIVANJU SREDSTVA ZA RAD

SREDSTVO ZA RAD: VIBRO NABIJAČ
NARUČILAC/VLASNIK : " IGP FIDIJA " D.O.O. Podgorica
MJESTO I DATUM PREGLEDA I ISPITIVANJA: Podgorica , 18.08.2017.god.

I - A/ OPŠTI PODACI -

Proizvođač: " Masalta Engineering Co "- China
Tip: " MR 68H"
Fabr.br.: -
Interni broj: 384
God.proizvodnje:-
Pogon: 4-otaktni benzinski motor
Upravljanje: Ručno

II - REZULTATI PREGLEDA I ISPITIVANJA:

- Stanje pogonskog i prenosnog mehanizma	ZADOVOLJAVA
- Stanje kontrolnih uređaja	ZADOVOLJAVA
- Stanje uređaja za uključenje, upravljanje i isključenje	ZADOVOLJAVA
- Antikorozivna zaštita	ZADOVOLJAVA
- Stanje metalne konstrukcije	ZADOVOLJAVA

III - NAPOMENA :

A)Pregled i ispitivanje su izvršena u skladu sa Zakonom o zaštiti i zdravlju na radu (Sl.. CG br.:34/14) i Pravilnika o postupku i rokovima za vršenje periodičnih pregleda i ispitivanja spedstava za rad, sredstava i opreme lične zaštite na radu i uslova radne sredine (Sl.. RCG br.: 71/05)

B) Stručni nalaz ima važnost 36 mjeseci ukoliko nije došlo do remonta sredstva za rad.

C) Sredstvo za rad može održavati samo stručno lice mašinske struke uz korišćenje kvalitetnih rezervnih djelova.

IV - OCJENA: NA NAVEDENOM SREDSTVU ZA RAD SU OBEZBIJEDENE PROPISANE MJERE I NORMATIVI ZAŠTITE NA RADU.

V - NAPOMENA :

- Pregled i ispitivanje su izvršena u skladu sa Zakonom o zaštiti i zdravlju na radu („Sl. CG" br.:34/14),
- Pravilnika o postupku i rokovima za vršenje periodičnih pregleda i ispitivanja sredstava za rad, sredstava i opreme lične zaštite na radu i uslova radne sredine(„Sl. RCG" br.: 71/05);
- Stručni nalaz ima važnost 36 mjeseci ukoliko nije došlo do remonta sredstva za rad.
- Sredstvo za rad može održavati samo stručno lice mašinske i elektro struke uz korišćenje kvalitetnih rezervnih djelova.

Dostavljeno :

"Naručiocu " - x2
a/a

Pregled i ispitivanje izvršili:

Šćepanović Branislav, dipl. el.inž.

Drašković Slobodan, dipl.el.inž

Bajić Marjan, dipl.maš.inž.

Popović Vesna, dipl.inž.građ.

Ova kontrola/ispitivanje izvršeno je prema našem najboljem znanju i savjesti i odnosi se isključivo na stanje u vrijeme izvršenja naše kontrole. Stručni nalaz je dozvoljeno reprodukovati samo kao cjelinu uz dozvolu izdavača i isti je valjan ukoliko je originalno potpisan i pečatom ovjeren

GEORGIOS KARKANIAS
PRESIDENT
3/12/18

iii) CONTRACTOR'S EQUIPMENT

The Tenderer shall provide adequate information to demonstrate clearly that it has the capability to meet the requirements for the key equipment listed in Volume I, Attachment 2 (Preliminary Programme). A separate Form shall be prepared for each item of equipment listed, or for alternative equipment proposed by the Tenderer. The Tenderer shall provide all the information requested below, to the extent possible. Fields with asterisk (*) shall be used for evaluation.

In case of a JVCA the form shall be submitted for each partner of the JVCA

Type of Equipment* VIBRATORY PLATE		
Equipment Information	Name of manufacturer MASALTA ENGINEERING Co	Model and power rating No072, "MR 68H", 9.5KW
	Capacity* 47Kg	Year of manufacture* 2012
Current Status	Current location PODGORICA, MONTENEGRO	
	Details of current commitments	
Source	Indicate source of the equipment ☐ Owned ☒ Rented ☐ Leased ☐ Specially manufactured	

The following information shall be provided only for equipment not owned by the Tenderer.

Owner	Name of owner IGP FIDIJA d.o.o.	
	Address of owner STARA VAROS, BLOCK 7, 81000 PODGORICA	
	Telephone +382 (0) 20 621140	Contact name and title Ivan Blagojevic, Director
	Fax	Telex
Agreements	Details of rental / lease / manufacture agreements specific to the project	
	Company IGP FIDIJA d.o.o. is owner of specific equipment and it is willing to dispose it based on the "Letter of Intent" signed between KARKANIAS ENVIRONMENTAL TECHNOLOGY S.A. and IGP FIDIJA d.o.o.	

GEORGIOS KARKANIAS
PRESIDENT
3/12/18

MONTINSPEKT d.o.o. Podgorica
TEHNIČKA ISPITIVANJA, KONTROLA KVALITETA I KVANTITETA, INŽENJERING
Podgorica, Bulevar Pera Ćetkovića 113; tel./fax: 020 656-920; 069 019 755; e-mail: montinspekt@t-com.me

Broj: **386-05/04/17**
Podgorica, 18.08.2017. god.

STRUČNI NALAZ
O PREGLEDU I ISPITIVANJU SREDSTVA ZA RAD

SREDSTVO ZA RAD: **VIBRO NABIJAČ**
NARUČILAC/VLASNIK : **" IGP FIDIJA " D.O.O. Podgorica**
MJESTO I DATUM PREGLEDA I ISPITIVANJA: Podgorica , 18.08.2017.god.

I - A/ OPŠTI PODACI -

Proizvođač: " Masalta Engineering Co "- China
Tip: " MR 68II"
Fabr.br.: -
Interni broj: 072
God.proizvodnje:-
Pogon: SUS-Dizel
Upravljanje: Ručno

II - REZULTATI PREGLEDA I ISPITIVANJA:

- Stanje pogonskog i prenosnog mehanizma	**ZADOVOLJAVA**
- Stanje kontrolnih uređaja	**ZADOVOLJAVA**
- Stanje uređaja za uključenje, upravljanje i isključenje	**ZADOVOLJAVA**
- Antikorozivna zaštita	**ZADOVOLJAVA**
- Stanje metalne konstrukcije	**ZADOVOLJAVA**

III - NAPOMENA :

A)Pregled i ispitivanje su izvršena u skladu sa Zakonom o zaštiti i zdravlju na radu (SL. CG br.:34/14) i Pravilnika o postupku i rokovima za vršenje periodičnih pregleda i ispitivanja spedstava za rad, sredstava i opreme lične zaštite na radu i uslova radne sredine (SL. RCG br.: 71/05)
B) Stručni nalaz ima važnost 36 mjeseci ukoliko nije došlo do remonta sredstva za rad.
C) Sredstvo za rad može održavati samo stručno lice mašinske struke uz korišćenje kvalitetnih rezervnih djelova.

IV - OCJENA: NA NAVEDENOM SREDSTVU ZA RAD SU OBEZBIJEĐENE PROPISANE MJERE I NORMATIVI ZAŠTITE NA RADU.

V - NAPOMENA :

- Pregled i ispitivanje su izvršena u skladu sa Zakonom o zaštiti i zdravlju na radu („Sl. CG" br.:34/14),
- Pravilnika o postupku i rokovima za vršenje periodičnih pregleda i ispitivanja sredstava za rad, sredstava i opreme lične zaštite na radu i uslova radne sredine(„Sl. RCG" br.: 71/05);
- Stručni nalaz ima važnost 36 mjeseci ukoliko nije došlo do remonta sredstva za rad.
- Sredstvo za rad može održavati samo stručno lice mašinske i elektro struke uz korišćenje kvalitetnih rezervnih djelova.

Dostavljeno :

"Naručiocu " - x2
a/a

Pregled i ispitivanje izvršili:

Šćepek Stanislav, dipl, el.inž.
Drašković Slobodan, dipl.el.inž.
Brđević Darko, dipl.maš.inž.
Popović Vesna, dipl.inž.grad.

Ova kontrola/ispitivanje izvršena je prema našem najboljem znanju i savjesti i odnosi se isključivo na stanje u vrijeme izvršenja naše kontrole. Stručni nalaz je dozvoljeno reprodukovati samo kao cjelinu uz dozvolu izdavača i isti je valjan ukoliko je originalno potpisan i pečatom ovjeren.

GEORGIOS KARKANIAS
PRESIDENT
3/12/18

iii) CONTRACTOR'S EQUIPMENT

The Tenderer shall provide adequate information to demonstrate clearly that it has the capability to meet the requirements for the key equipment listed in Volume I, Attachment 2 (Preliminary Programme). A separate Form shall be prepared for each item of equipment listed, or for alternative equipment proposed by the Tenderer. The Tenderer shall provide all the information requested below, to the extent possible. Fields with asterisk (*) shall be used for evaluation.

In case of a JVCA the form shall be submitted for each partner of the JVCA

Type of Equipment* VIBRATORY PLATE		
Equipment Information	Name of manufacturer WACKER	Model and power rating DPU 6055, 9.3KW
	Capacity* 47Kg	Year of manufacture* 2007
Current Status	Current location BIJELO POLJE, MONTENEGRO	
	Details of current commitments	
Source	Indicate source of the equipment ☐ Owned ☒ Rented ☐ Leased ☐ Specially manufactured	

The following information shall be provided only for equipment not owned by the Tenderer.

Owner	Name of owner IGP FIDIJA d.o.o.	
	Address of owner STARA VAROS, BLOCK 7, 81000 PODGORICA	
	Telephone +382 (0) 20 621140	Contact name and title Ivan Blagojevic, Director
	Fax	Telex
Agreements	Details of rental / lease / manufacture agreements specific to the project	
	Company IGP FIDIJA d.o.o. is owner of specific equipment and it is willing to dispose it based on the "Letter of Intent" signed between KARKANIAS ENVIRONMENTAL TECHNOLOGY S.A. and IGP FIDIJA d.o.o.	

GEORGIOS KARKANIAS
PRESIDENT

3/12/18

MONTINSPEKT d.o.o. Podgorica
TEHNIČKA ISPITIVANJA, KONTROLA KVALITETA I KVANTITETA, INŽENJERING
Podgorica, Bulevar Pera Ćetkovića 113; tel./fax: 020 656-920; 069 019 755; e-mail: montinspekt@t-com.me

Broj: 386-04/04/17
Podgorica, 18.08.2017. god.

STRUČNI NALAZ
O PREGLEDU I ISPITIVANJU SREDSTVA ZA RAD

SREDSTVO ZA RAD: VIBRO NABIJAČ
NARUČILAC/VLASNIK : " IGP FIDIJA " D.O.O. Podgorica
MJESTO I DATUM PREGLEDA I ISPITIVANJA: Podgorica , 18.08.2017.god.

I - A/ OPŠTI PODACI -

Proizvodač: " Wacker "- Germany
Tip: " DPU 6055"
Fabr.br.: 0610053
Interni broj:-
God.proizvodnje:-
Pogon: SUS-Dizel
Upravljanje: Ručno

II - REZULTATI PREGLEDA I ISPITIVANJA:

- Stanje pogonskog i prenosnog mehanizma	ZADOVOLJAVA
- Stanje kontrolnih uređaja	ZADOVOLJAVA
- Stanje uređaja za uključenje, upravljanje i isključenje	ZADOVOLJAVA
- Antikorozivna zaštita	ZADOVOLJAVA
- Stanje metalne konstrukcije	ZADOVOLJAVA

III - NAPOMENA :

A)Pregled i ispitivanje su izvršena u skladu sa Zakonom o zaštiti i zdravlju na radu (SL. CG br.:34/14) i Pravilnika o postupku i rokovima za vršenje periodičnih pregleda i ispitivanja spedstava za rad, sredstava i opreme lične zaštite na radu i uslova radne sredine (SL. RCG br.: 71/05)
B) Stručni nalaz ima važnost 36 mjeseci ukoliko nije došlo do remonta sredstva za rad.
C) Sredstvo za rad može održavati samo stručno lice mašinske struke uz korišćenje kvalitetnih rezervnih djelova.

IV - OCJENA: NA NAVEDENOM SREDSTVU ZA RAD SU OBEZBIJEĐENE PROPISANE MJERE I NORMATIVI ZAŠTITE NA RADU.

V - NAPOMENA :

- Pregled i ispitivanje su izvršena u skladu sa Zakonom o zaštiti i zdravlju na radu („Sl. CG" br.:34/14),
- Pravilnika o postupku i rokovima za vršenje periodičnih pregleda i ispitivanja sredstava za rad, sredstava i opreme lične zaštite na radu i uslova radne sredine(„Sl. RCG" br.: 71/05);
- Stručni nalaz ima važnost 36 mjeseci ukoliko nije došlo do remonta sredstva za rad.
- Sredstvo za rad može održavati samo stručno lice mašinske i elektro struke uz korišćenje kvalitetnih rezervnih djelova.

Dostavljeno :

"Naručiocu " x2
a/a

Pregled i ispitivanje izvršili:

Šebek Branislav, dipl, el.inž.

Dražković Slobodan, dipl.el.inž

Brčić Marjan, dipl.maš.inž.

Popović Vesna, dipl.inž.grad.

Ova kontrola/ispitivanje izvršeno je prema našem najboljem znanju i savjesti i odnosi se isključivo na stanje u vrijeme izvršenja naše kontrole. Stručni nalaz je dozvoljeno reprodukovati samo kao cjelinu uz dozvolu izdavača i isti je valjan ukoliko je originalno potpisan i pečatom ovjeren

GEORGIOS KARKANIAS
PRESIDENT
3/12/18

iii) CONTRACTOR'S EQUIPMENT

The Tenderer shall provide adequate information to demonstrate clearly that it has the capability to meet the requirements for the key equipment listed in Volume I, Attachment 2 (Preliminary Programme). A separate Form shall be prepared for each item of equipment listed, or for alternative equipment proposed by the Tenderer. The Tenderer shall provide all the information requested below, to the extent possible. Fields with asterisk (*) shall be used for evaluation.

In case of a JVCA the form shall be submitted for each partner of the JVCA

Type of Equipment* VIBRATORY ROLLER		
Equipment Information	Name of manufacturer ROBERT AEBI	Model and power rating DV 30 , 12.4KW
	Capacity* 3500Kg, Roller width=120cm	Year of manufacture* 1990
Current Status	Current location BIJELA, TIVAT, MONTENEGRO	
	Details of current commitments	
Source	Indicate source of the equipment ☐ Owned ☒ Rented ☐ Leased ☐ Specially manufactured	

The following information shall be provided only for equipment not owned by the Tenderer.

Owner	Name of owner IGP FIDIJA d.o.o.	
	Address of owner STARA VAROS, BLOCK 7, 81000 PODGORICA	
	Telephone +382 (0) 20 621140	Contact name and title Ivan Blagojevic, Director
	Fax	Telex
Agreements	Details of rental / lease / manufacture agreements specific to the project	
	Company IGP FIDIJA d.o.o. is owner of specific equipment and it is willing to dispose it based on the "Letter of Intent" signed between KARKANIAS ENVIRONMENTAL TECHNOLOGY S.A. and IGP FIDIJA d.o.o.	

GEORGIOS KARKANIAS
PRESIDENT
3/12/18

MONTINSPEKT d.o.o. Podgorica
TEHNIČKA ISPITIVANJA, KONTROLA KVALITETA I KVANTITETA, INŽENJERING
Podgorica, Bulevar Pera Četkovića 113; tel./fax: 020 656-920; 069 019 755; e-mail: montinspekt@t-com.me

Broj: 386-02/04/17
Podgorica, 18.08.2017. god.

STRUČNI NALAZ
O PREGLEDU I ISPITIVANJU SREDSTVA ZA RAD

SREDSTVO ZA RAD: VALJAK
NARUČILAC/VLASNIK : " IGP FIDIJA " D.O.O. Podgorica
MJESTO I DATUM PREGLEDA I ISPITIVANJA: Podgorica , 18.08.2017.god.

I - A/ OPŠTI PODACI -

Proizvođač: " Robert Aebi "- Italia
Tip: " DV 30 "
Fabr.br.: 4861C124
Interni broj: -
God.proizvodnje:-
Pogon: SUS-Dizel
Upravljanje: iz kabine

II - REZULTATI PREGLEDA I ISPITIVANJA:

STANJE METALNE KONSTRUKCIJE:	ZADOVOLJAVA
STANJE UREĐAJA ZA UKLJ., UPRAV. I ISKLJUČIV.	ZADOVOLJAVA
MEHANIČKA ZAŠTITA ROTACIONIH I POKRETNIH ELEMENATA	ZADOVOLJAVA
ZVUČNA I SVJETLOSNA SIGNALIZACIJA	ZADOVOLJAVA
STANJE PNEUMATSKE INSTALACIJE	ZADOVOLJAVA
STANJE HIDRAULIČNE INSTALACIJE	ZADOVOLJAVA
STABILNOST SREDSTVA	ZADOVOLJAVA
POGONSKI UREĐAJ:	ZADOVOLJAVA
KOČIONI UREĐAJ:	ZADOVOLJAVA

III - NAPOMENA :

A)Pregled i ispitivanje su izvršena u skladu sa Zakonom o zaštiti i zdravlju na radu (Sl.. CG br.:34/14) i Pravilnika o postupku i rokovima za vršenje periodičnih pregleda i ispitivanja spedstava za rad, sredstava i opreme lične zaštite na radu i uslova radne sredine (SL. RCG br.: 71/05)
B) Stručni nalaz ima važnost 36 mjeseci ukoliko nije došlo do remonta sredstva za rad.
C) Sredstvo za rad može održavati samo stručno lice mašinske struke uz korišćenje kvalitetnih rezervnih djelova.

IV - OCJENA: NA NAVEDENOM SREDSTVU ZA RAD SU OBEZBJEĐENE PROPISANE MJERE I NORMATIVI ZAŠTITE NA RADU.

V - NAPOMENA :

- Pregled i ispitivanje su izvršena u skladu sa Zakonom o zaštiti i zdravlju na radu („Sl. CG" br.:34/14),
- Pravilnika o postupku i rokovima za vršenje periodičnih pregleda i ispitivanja sredstava za rad, sredstava i opreme lične zaštite na radu i uslova radne sredine(„Sl. RCG" br.: 71/05);
- Stručni nalaz ima važnost 36 mjeseci ukoliko nije došlo do remonta sredstva za rad.
- Sredstvo za rad može održavati samo stručno lice mašinske i elektro struke uz korišćenje kvalitetnih rezervnih djelova.

Dostavljeno :

"Naručiocu " – x2
a/a

Pregled i ispitivanje izvršili:

Šobić Stanislav, dipl. el.inž.

Drašković Slobodan, dipl.el.inž

Brnović Marjan, dipl.maš.inž.

Popović Vesna, dipl.inž.grad.

Ova kontrola/ispitivanje izvršeno je prema našem najboljem znanju i savjesti i odnosi se isključivo na stanje u vrijeme izvršenja naše kontrole. Stručni nalaz je dozvoljeno reprodukovati samo kao cjelinu uz dozvolu izdavača i isti je valjan ukoliko je originalno potpisan i pečatom ovjeren.

31/12/18

GEORGIOS KARKANIAS
PRESIDENT

KARKANIAS

Explanation Letter of proposed equipment

This letter refers to explanation of proposed equipment and specifically vibratory Roller.

In place of one Vibratory Plate, we propose one Vibratory Roller.
Vibratory Roller "ROBERT AEBI DV 30", will have the same or better capacity and sufficient power as the vibratory plate. Also, is suitable to be used and be effective and faster in situations and positions that vibratory plate cannot be the same efficient.

Karkanias Environmental Technology SA.
Giorgos Karkanias, President

KARKANIAS ENVIRONMENTAL TECHNOLOGY S.A.
INDUSTRIAL AREA OF LARISA - GREECE
POSTAL CODE 41004, BOX 3053
TEL.: +30 2410 541386 - FAX: +30 2410 541354
Email: info@karkanias.gr
TAX NUMBER: 095244711
REGISTRATION NUMBER: 48779/31/B/01/12

3/12/18

iii) CONTRACTOR'S EQUIPMENT

The Tenderer shall provide adequate information to demonstrate clearly that it has the capability to meet the requirements for the key equipment listed in Volume I, Attachment 2 (Preliminary Programme). A separate Form shall be prepared for each item of equipment listed, or for alternative equipment proposed by the Tenderer. The Tenderer shall provide all the information requested below, to the extent possible. Fields with asterisk (*) shall be used for evaluation.

In case of a JVCA the form shall be submitted for each partner of the JVCA

Type of Equipment* PREFABRICATED FORMWORK		
Equipment Information	Name of manufacturer HUNNEBECK	Model and power rating METAL FORMWORK PANELS ALUMINIUM CONSTRUCTION AND WOODEN TABLES
	Capacity* WALL FORMWORK= 700m2 PLATE FORMWORK= 1500m2	Year of manufacture* 2010 - 2016
Current Status	Current location BIJELA, TIVAT, MONTENEGRO	
	Details of current commitments	
Source	Indicate source of the equipment ☐ Owned ☒ Rented ☐ Leased ☐ Specially manufactured	

The following information shall be provided only for equipment not owned by the Tenderer.

Owner	Name of owner IGP FIDIJA d.o.o.	
	Address of owner STARA VAROS, BLOCK 7, 81000 PODGORICA	
	Telephone +382 (0) 20 621140	Contact name and title Ivan Blagojevic, Director
	Fax	Telex
Agreements	Details of rental / lease / manufacture agreements specific to the project	
	Company IGP FIDIJA d.o.o. is owner of specific equipment and it is willing to dispose it based on the "Letter of Intent" signed between KARKANIAS ENVIRONMENTAL TECHNOLOGY S.A. and IGP FIDIJA d.o.o.	

GEORGIOS KARKANIAS
PRESIDENT
3/12/18

Sales Invoice

Invoice No.	50261378
Date	01.03.2016
Order Type	DE HDE Sale Order
Order Number	21139931
Customer No.	1016209

---in reply refer to

HÜNNEB

Page

Hünnebeck Deutschland GmbH
Postfach 104461, 40855 Ratingen
Fidija

Stara Varos, Blok
ME 81000 Podgorica

Delivery Address
Fidija
Stara Varos
Blok 7

81000 Podgorica-ME

Accounting Month	
Ex warehouse	V00 HBK DE KCG Ratingen SAL
To warehouse	
Representative	Montenegro
Your Contact	Repenning, Cathrin
Phone	(02102) 937-311
Delivery Conditions	CPT PODGORICA-
Your order number	by mail 22.01.2016
Your VAT reg. no.	

Sum of articles according to list	[illegible]
Total	30
Tax 0.00%	
Invoice Amount	30

Payment: Up to 01.03.2016 without deduction

Invoice amount	Cash discount amount	Net amount	Due date	weight KG
[illegible] EUR			01.03.2016	4.585.892

Ohra Gora - Ministarstvo finansija
UPRAVA CARINA
35203
PODGORICA

Hünnebeck Deutschland GmbH
Postfach 104461 40855 Ratingen
Schlüsselstr. 10, 40885 Ratingen
Phone: + 49 2102 937-1
Fax: + 49 2102 37631
Registry Court: Düsseldorf [illegible] Registered Office: Ratingen
Bank details
Commerzbank Düsseldorf Bank Code: 101 400 00, Acc. No. 15 33 315 00, BIC COBADEFFXXX, IBAN DE34 3004 0000 0180 3315 00

Manager: Martin Hemberger
VAT-ID-NO.: DE812774741,
Tax-no.: 147/5821/1170

991
09.03.16
325

Our material is supplied under the General Conditions of Contract, Leasing

GEORGIOS KARBANIAS
PRESIDENT
3/12/18

Sales Invoice

Invoice No.	50261378
Date	01.03.2016
Order Type	DE HDE Sale Order
Order Number	21135931
Customer No.	1015209

---in reply refer to

HUNNEBECK
A BRAVO COMPANY

GEORGIOS KARKANIAS
PRESIDENT
3/12/18

Page 2 of

Item Number	Description	N U	From WH	Qty	Position-weight	Unit Price EUR			Total Value EUR
DN: 161557140 dated 01.03.16, loaded on 01.03.16 ex stockyard HBK DE HDE Darmstadt HIRE									
1002 RASTO/TAKKO-FORMWORK									
[illegible]	TAKKO-Panel 45 x 120	U	X24	5	119,[illegible]	96,93			48[illegible]
	Customs Tariff No. 73084[illegible]/Country of Origin PL								
[illegible]	TAKKO-Panel 90 x 120	U	X24	4	[illegible]	118,94			472,[illegible]
	Customs Tariff No. 73084[illegible]/Country of Origin PL								
[illegible]	TAKKO-Panel 75 x 120	U	X24	[illegible]	[illegible]	[illegible]3,30			1.019,[illegible]
	Customs Tariff No. 73084[illegible]/Country of Origin PL								
[illegible]	TAKKO-Panel 60 x 120	U	X24	[illegible]	[illegible]	107,27			[illegible]
	Customs Tariff No. 73084[illegible]/Country of Origin PL								
						Total 1002 RASTO/TAKKO-FORMWORK			[illegible]
1076 TOPEC-FORMWORK									
[illegible]	PANEL 180/180 POWD.COAT	U	X24	29	1392,[illegible]	307,59			[illegible]
	Customs Tariff No. 76109[illegible]/Country of Origin DE								
[illegible]	TOPEC Q GIANT PANEL 180/180	U	X24	[illegible]	2640,792	344,21			[illegible]
	Customs Tariff No. 76109090/Country of Origin DE								
						Total 1076 TOPEC-FORMWORK			[illegible] 275,7[illegible]
						Total (net)			28.195,8[illegible]
									30.386,91

Payment
[illegible] % cash in advance

The Exporter of the products covered by [illegible] Customs authorization No. [illegible]/2600/SA/0002) declares that, except where otherwise clearly indicated, these products are of [illegible] preferential origin.

Hunnebeck Deutschland GmbH
Postfach [illegible]
Rechecke [illegible]
Phone [illegible]
Fax [illegible]
Registry Court [illegible]
Bank details
Commerzbank [illegible] BIC COBADEFMXXX, IBAN DE54 [illegible]

Our material is supplied under the present General Conditions of Contract, Sales and Leasing.

Cima Gora Ministarstvo finansija UPRAVA CARINA 85201 PODGORICA

Lieferschein KAUFAUFTRAG

Lieferschein Nr.	231567146
Datum	01.03.2015
Auftragstyp	Kauf
Auftragsnummer	21139921
Kundennummer	10:3209

HÜNNEBECK

Hünnebeck Deutschland GmbH
Postfach 100461, 40855 Ratingen

Fidija

Stara Varos, Blok:
81000 Podgorica

Lieferanschrift

ID Nummer: 3040147
Fidija
Stara Varos
Blok 7

81000 Podgorica-ME

Erfasst durch

Von Lager
An Lager
Vertreter
Ihr Ansprechpartner
Telefon-Nr.:
Lieferbedingung
Ihre Bestellnummer
Ihre Ust-Id-Nr
Mietbeginn

Seite 1 von 1

Marc Lengner

HSK DE RDZ Darmstadt NORD

Nennenagel
Rapenning, Carsten
(011)637 927-511
CPT PODGORICA-
CY call 22.02.2026

Artikelnr.	Menge	ME	G/K	Bezeichnung	m²	Gewicht Kg
[illegible]	4	ST	3	1002 RASTO-SCHALUNG	[illegible]	[illegible]
592521	2	ST	3	TAKKO Tafel 90/120	[illegible]	[illegible]
592520	2	ST	3	TAKKO Tafel 75/120	[illegible]	[illegible]
592519	5	ST	3	TAKKO Tafel 60/120	[illegible]	[illegible]
				TAKKO Tafel 45/120	[illegible]	[illegible]
554010				1076 TOPEC-DECKEN-SCHALUNG	[illegible]	[illegible]
503687	28	ST	3	TOPEC Tafel 120/150 pulv.	[illegible]	[illegible]
	55	ST	3	TOPEC Q Gro§tafel 150/150	[illegible]	[illegible]

Werkzeug, Vermietung, Reinigung und Reparatur von Baugeräten unterliegen nicht der Abzugbesteuerung nach dem Gesetz zur Eindämmung illegaler Betätigung im Baugewerbe. Einer Freistellungsbescheinigung bedarf es damit. Unsere Aufbau- und Verwendungsanleitungen stehen Ihnen kostenfrei auf unserer Internetseite www.huennebeck.com zur Verfügung.

Name in Druckbuchstaben/Empfänger:

Container-Nr.	KFZ-Kennzeichen	Spedition	Datum	Unterschrift	Summe €	Summe Bewertung
		SAE			297,960	[illegible]

Hünnebeck Deutschland GmbH
Postfach 100461,
40855 Ratingen
Telefon: +49 2102 937-0
Telefax: +49 2102 77551
Amtsgericht Düsseldorf HRB 44214, Sitz der Gesellschaft: Ratingen
Bankverbindung:
Commerzbank Düsseldorf, BLZ 300 400 00, Kto.-Nr. 19 65 315 00, BIC COBADEFFXXX, IBAN DE54 3004 0000 0196 5315 00

Geschäftsführung: Martin Hamberger
Ust-Id-Nr.: DE812774741
Steuer-Nr.: 147/5811/2176

Wir liefern unter Zugrundelegung Ihnen vorliegenden Geschäftsbedingungen.

GEORGIOS [illegible]
PRÄSIDENT

3/12/18

3/12/18

GEORGIOS KARKAMAS
PRESIDENT

Sales Invoice

Invoice No.	50260092
Date	29.02.2016
Order Type	DE HDE Sale Order
Order Number	21139931
Customer No.	1016209

--->in reply refer to

HÜNNEBECK
A BRAND COMPANY

Hünnebeck Deutschland GmbH
Postfach 104461, 40855 Ratingen
Fidija

Stara Varos, Blok:
ME 81000 Podgorica

Delivery Address

Fidija
Stara Varos
Blok 7

81000 Podgorica-ME

Page 1 of 2

Accounting Month	
Ex warehouse	V00 HBK DE HGG Ratingen SALE
To warehouse	
Representative	Montenegro
Your Contact	Repenning, Cathrin
Phone	(02102) 937-31[illegible]
Delivery Conditions	CPT PODGORICA-
Your order number	by mail 22.02.2016
Your VAT reg. no.	

	Total EUR
Sum of articles according to list	2.659,76
Total	2.659,76
Tax 0.00%	0.00
Invoice Amount	2.659,76

Payment: Up to 29.02.2016 without deduction.

Invoice amount	Cash discount amount	Net amount	Due date	weight KG
2.659,76 EUR			29.02.2016	633,372

ЗЛОКОВИЋ 207

Hünnebeck Deutschland GmbH
Postfach 104461, 40855 Ratingen
Rehhecke 88, 40885 Ratingen
Phone: + 49 2102 [illegible]
Fax: + 49 2102 37[illegible]
Registry Court: Düsseldorf HRB 44118, Registered Office: Ratingen
Bank details:
Commerzbank Düsseldorf, Bank Code 300 400 00, Acc. No 18 63 315 00, BIC COBADEFFXXX, IBAN DE54 3004 0000 0186 3315 00

Manager: Martin Hemberger
VAT-ID-NO.: DE812774741,
Tax-no.: 147/5831/3170

9910 325
09.03.16

Our material is supplied under the present General Conditions of Contract, Sales and Leasing.

Sales Invoice

Invoice No.	50260092
Date	29.02.2016
Order Type	DE HDE Sale Order
Order Number	21139931
Customer No.	1016209

--->in reply refer to

HONNEBECK
A LIAND COMPANY

GEORGIOS KARKANIAS
PRESIDENT
3/12/18

Item Number	Description	N U	From WH	Qty	Position-weight	Unit Price EUR			Total Value EUR
DN: 161566271 dated 29.02.16, loaded on 29.02.16 ex stockyard HBK DE HDE Laatzen HIRE									
1002 RASTO/TAKKO-FORMWORK									
536050	RASTO-Hinged Corner 30/270	U	X30	6	430,398	284.33			1.705,97
	Customs Tariff No. 73084000/Country of Origin HU								
583563	TAKKO-Hinged Corner 30/120	U	X30	6	202,974	158.97			953,79
	Customs Tariff No. 73084000/Country of Origin HU								
						Total 1002 RASTO/TAKKO-FORMWORK			2.659,76
						Total (net)			2.659,76

Payment:
100 % cash in advance.

The Exporter of the products covered by this document (customs authorization No DE/2600/EA/0002) declares that, except where otherwise clearly indicated, these products are of EEC preferential origin.

The date of supply of goods or services is in line with the invoice date unless otherwise shown. Unless otherwise expressly agreed, the purchase price and all related costs are due for payment 30 days after date of invoice. Our user manuals can be downloaded free of charge from our webside www.huennebeck.com.
Tax exempt supply of goods outside the European Union

Hünnebeck Deutschland GmbH
Postfach 104461 40855 Ratingen
Rehhecke 50, 40885 Ratingen
Phone: +49 2102 937-1
Fax: +49 2102 37651
Registry Court: Düsseldorf HRB 44118, Registered Office: Ratingen
Bank details:
Commerzbank Düsseldorf, Bank Code 300 400 00, Acc. No. 18 63 315 00, BIC COBADEFFXXX, IBAN DE54 3004 0000 0126 3315 00

Manager: Martin Hemberger
VAT-ID-NO.: DK812774741
Tax-no.: 147/5831/1170

Our material is supplied under the present General Conditions of Contract, Sales and Leasing.

29.02.16

GEORGIOS KARKANIAS
PRESIDENT
3/12/18

HÖNNEBECK
A BRAND COMPANY

Sales Invoice

Invoice No.	50261389
Date	01.03.2016
Order Type	DE HDE Sale Order
Order Number	21135931
Customer No.	1016209

---> in reply refer to

Hönnebeck Deutschland GmbH
Postfach 104461, 40855 Ratingen
Fidija

Stara Varos, Blok:
ME 81000 Podgorica

Delivery Address
Fidija
Stara Varos
Blok 7

81000 Podgorica-ME

Page 1 of 1

Accounting Month	
Ex warehouse	V00 HBK DE HGG Ratingen SALE
To warehouse	
Representative	Montenegro
Your Contact	Repenning, Cathrin
Phone	(02102) 937-3[illegible]
Delivery Conditions	CPT PODGORICA-
Your order number	by mail 2[illegible].02.2016
Your VAT reg. no.	

	Total EUR
Sum of articles according to list	9.318,20
Total	9.318,20
Tax 0.00%	0,00
Invoice Amount	5.318,20

Payment: Up to 01.03.2016 without deduction.

Invoice amount	Cash discount amount	Net amount	Due date	weight KG
9.318,20 EUR			01.03.2016	2.106,481

325
09.03.16

Hönnebeck Deutschland GmbH
Postfach 104461 40855 Ratingen
Schmalke 80, 40885 Ratingen
Phone + 49 2102 337-1
Fax + 49 2102 37651
Registry Court Düsseldorf HRB 44118, Registered Office: Ratingen
Bank details:
Commerzbank Düsseldorf, Bank Code 300 400 00, Acc. No. 18 63 315 00, BIC COBADEFFXXX, IBAN DE56 3004 0000

Manager: Martin Hemberger
VAT-ID-NO.: DE812774741,
Tax-no.: 147/5831/1170

Our material is supplied under the present General Conditions of Contract, Sales and Leading

GEORGIOS KARKANIAS
PRESIDENT
3/12/18
2

Sales Invoice

Invoice No. 90261389
Date 01.03.2016
Order Type DE HDS Sale Order
Order Number 21129931
Customer No. 1016235

---ase reply refer to

HÜNNEBECK
A BRAND COMPANY

Page 1 of

Item Number	Description	N U	From WH	Qty	Position-weight	Unit Price EUR			Total Va.u EUR
DN: 161567164 dated 01.03.16, loaded on 01.03.16 ex stockyard HBK DE HGG Ratingen SALE									
1002 RASTO/TAKKO-FORMWORK									
[illegible]	R-ADJUSTABLE ALIGNING CLAMP	N	V00	50	254,000	21.54			
[illegible]	Customs Tariff No. 83024190/Country of Origin PT								
[illegible]	TAKKO-MP-Panel 70 x 120	N	V00	5	180,635	169.27			1.077,
[illegible]	Customs Tariff No. 73084000/Country of Origin HU								
[illegible]	TAKKO-Panel 30 x 120	N	V00	5	104.072	98.21			516,
[illegible]	Customs Tariff No. 73084000/Country of Origin PL								
[illegible]	TAKKO-Inner Corner 30/120	N	V00	31	646,674	131,29			529,
[illegible]	Customs Tariff No. 73084000/Country of Origin HU								
[illegible]	RASTO OUTER CORNER CLAMP N	N	V00	100	519.000	26,00			1.77[illegible]
[illegible]	Customs Tariff No. 73084000/Country of Origin PT								
[illegible]	S-ALIGNING PANEL CLAMP N	N	V00	100	282,100	13.39			2.800,[illegible]
[illegible]	Customs Tariff No. 83024190/Country of Origin PT								
						Total 1002 RASTO/TAKKO-FORMWORK			[illegible]
						Total (net)			9.318,2
									9.318,2

[illegible] Duty in advance.

[illegible] Regarding all the products covered by this document (customs authorization No DE/2600/BA/00021-2016) we declare that, except where [illegible] clearly indicated, these products are of EEC preferential origin.

The [illegible] of supply of goods or services is in line with the invoice date unless otherwise shown. Unless otherwise expressly

[illegible] Deutschland GmbH
[illegible] 40885 Ratingen
[illegible] 40885 Ratingen
[illegible] 2102 [illegible]
Fax [illegible] 2102 [illegible]
[illegible] Court Amtsgericht Kre [illegible], Registered Office: Ratingen
[illegible] Shareholder: Hoka Ooo [illegible], Acc. No. [illegible]

Managers: Martin Hünnebeck
VAT-ID-NO.: DE812774741
Tax-no.: 147/5831/1175

[illegible] Germany
General [illegible]
Logistics

[illegible] BIC COBADEFFXXX, IBAN DE64 [illegible]

Sales Invoice

Invoice No.	50261407
Date	01.03.2016
Order Type	DE HDE Sale Order
Order Number	21139931
Customer No.	1016209

--->in reply refer to

HÜNNEBECK
A GRAND COMPANY

GEORGIOS KARKANIAS
PRESIDENT
3/12/18

Hünnebeck Deutschland GmbH
Postfach 104461, 40855 Ratingen
Fidija

Stara Varos, Blok:
ME 81000 Podgorica

Delivery Address

Fidija
Stara Varos
Blok 7

81000 Podgorica-ME

Accounting month	
Ex warehouse	VOO HDE DE HDE Ratingen SALE
To warehouse	
Representative	Montenegro
Your Contact	Kopenhagen, Sabrina
Phone	[illegible]
Delivery Conditions	CPT PODGORICA
Your order number	by mail [illegible]
Your VAT reg. no.	

	Total EUR
Sum of articles according to list	17.138,51
Total	17.138,51
Tax 0.00%	0,00
Invoice Amount	17.138,51

Payment: Up to 01.03.2016 without deduction.

Invoice amount	Cash discount amount	Net amount	Due date	weight KG
17.138,51 EUR			01.03.2016	5.689,297

Hünnebeck Deutschland GmbH
Postfach 104461, 40855 Ratingen
Rehhecke 60, 40885 Ratingen
Phone: + 49 2102 937-1
Fax: + 49 2102 37651
Registry Court: Düsseldorf HRB 44118, Registered Office: Ratingen
Bank details:
Commerzbank Düsseldorf, Bank Code 300 400 00, Acc. No. 18 63 315 00, BIC COBADEFFXXX, IBAN DE54 3004 0000 0186 3315 00

Manager: Martin Hemberger
VAT-ID-NO.: DE812774741,
Tax-no.: 147/5831/1170

Our material is supplied under the present General Conditions of Contract, Sales and Leasing

OTAIJA
3192 325
09.03.16

Sales Invoice

Invoice No. 90261407
Date 01.03.2016
Order Type DE HDE Sale Order
Order Number 21139931
Customer No. 1116209

--->in reply refer to

Item Number	Description	N U	From WH	Qty	Position-weight	Unit Price EUR			Total Va EUR
DN: 161567415 dated 01.03.16, loaded on 01.03.16 ex stockyard HBK DE HDE Darmstadt HIRE									
0220 EUROPLUS PROPS									
552147	STEEL PROP EUROPLUS 350 DB/DI	U	X24	150	3200,250	33,17			4,97
	Customs Tariff No. 73084000/Country of Origin PL								
						Total 0220 EUROPLUS PROPS			4,97
1002 RASTO/TAKKO-FORMWORK									
589508	TAKKO-Panel 40 x 120	U	X24	20	769,480	116,04			2,3
	Customs Tariff No. 73084000/Country of Origin PL								
589520	TAKKO-Panel 80 x 120	U	X24	10	891,240	107,27			1,0
	Customs Tariff No. 73084000/Country of Origin PL								
						Total 1002 RASTO/TAKKO-FORMWORK			3,4
1076 TOPEC-FORMWORK									
[illegible]	TOPEC Q-GIANT PANEL 240/180	U	X24	15	787,355	344,21			5,1
	Customs Tariff No. 76109090/Country of Origin DE								
468410	TOPEC BEARING	U	X24	50	360,000	18,52			2,7
	Customs Tariff No. 73259910/Country of Origin DE								
						Total 1076 TOPEC-FORMWORK			7,9
9096 TRANSPORT AND STORAGE									
548420	EURO Lattice Box	U	X24	1	71,551	150,78			1
	Customs Tariff No. 73269040/Country of Origin PT								
553689	EURO Stacking Frame 120/80	U	X24	4	217,980	121,49			4
	Customs Tariff No. 73269040/Country of Origin PL								
						Total 9096 TRANSPORT AND STORAGE			5
DN: 161567422 dated 01.03.16, loaded on 01.03.16 ex stockyard HBK DE HDE Darmstadt HIRE									
9096 TRANSPORT AND STORAGE									

Material is supplied under the General Conditions of Contract, Sa Leasing.

Hünnebeck Deutschland GmbH
Postfach 100461 40855 Ratingen
Rehhecke 50, 40885 Ratingen
Phone + 49 2102 537-1
Fax + 49 2102 37691
Registry Court: Düsseldorf HRB 44136, Registered Office: Ratingen
Bank Details:
Commerzbank Düsseldorf, Bank Code 300 400 00, Acc. No. 18 43 [illegible], BIC COBADEFFXXX, IBAN DE96 3004 0000 0184 3[illegible]

Manager: Martin Homberger
VAT-ID-NO: DE812774741
Tax-no: 147/5831/1170

GEORGIOS KARANIAS
PRESIDENT

3/12/18

GEORGIOS KARKANIAS
RESIDENT 3/12/18

Sales Invoice

Invoice No.	50261407
Date	01.03.2016
Order Type	DE HDE Sale Order
Order Number	21139931
Customer No.	1016209

---> in reply refer to

HÜNNEBECK
A BRAND COMPANY

Item Number	Description	NU	From WH	Qty	Position-weight	Unit Price EUR			Total Value EUR
548480	EURO Lattice Box Customs Tariff No. 73269040/Country of Origin PT	U	X24	1	71,551	150,78			150,78
						Total 9096 TRANSPORT AND STORAGE			150,78
						Total (net)			17.138,51

Payment:
100 % cash in advance

The Exporter of the products covered by this document (customs authorization No. DE/2600/EA/0002) declares that, except where otherwise clearly indicated, these products are of EEC preferential origin.

The date of supply of goods or services is in line with the invoice date unless otherwise shown. Unless otherwise expressly agreed, the purchase price and all related costs are due for payment 30 days after date of invoice. Our user manuals can be downloaded free of charge from our webside www.huennebeck.com.
Tax exempt supply of goods outside the European Union

HÜNNEBECK
A BRAND COMPANY
Hünnebeck Deutschland GmbH
Niederlassung Rhein-Main
Gutenbergstr. 2[illegible], 64293 Darmstadt
Tel.: +49 (0)6151 87004-0, Fax: +49 (0)6151 87004-33

Our material is supplied under the [illegible] General Conditions of Contract. [illegible] Leasing.

Hünnebeck Deutschland GmbH
Postfach 104461 40855 Ratingen
Rehhecke 80; 40885 Ratingen
Phone: + 49 2102 937-1
Fax: + 49 2102 37651
Registry Court: Düsseldorf HRB 44118, Registered Office: Ratingen
Bank details:
Commerzbank Düsseldorf, Bank Code 300 400 00, Acc. No. 18 63 315 00, BIC COBADEFFXXX, IBAN DE54 3004 0000 0186 3315 00

Manager: Martin Hemberger
VAT-ID-NO.: DE812774741
Tax-no.: 147/5831/1170

iv) CONTRACTOR'S PERSONNEL

Proposed Personnel

Tenderers should provide the names of suitably qualified personnel to meet the specified requirements for each of the positions listed in Tender Data. The data on their experience should be supplied using the Form below for each candidate.

1.	CONTRACTOR'S REPRESENTATIVE
	KARKANIA STAMATIA
2.	CONTRACTOR'S REPRESENTATIVE ALTERNATE
	KARANIKA ATHINA
3.	SITE MANAGER
	KARANIKA ATHINA
4.	SITE MANAGER ALTERNATE
	GLEZOS FLORIOS
5.	LAND SURVEYOR
	IAKOVAKIS KONSTANTINOS
6.	LAND SURVEYOR ALTERNATE
	VALARIS DIMITRIOS
7.	CONSTRUCTION ENGINEER
	POUTSIAKAS APOSTOLOS
8.	CONSTRUCTION ENGINEER ALTERNATE
	MARGARITIS VASILEIOS
9.	ELECTRICAL ENGINEER
	KOSTAS-MPEZEVEGKIS BASILEIOS
10.	ELECTRICAL ENGINEER ALTERNATE
	GKAZGKANIS DIMITRIOS
11.	DESIGNER OF WWTP/WATER SUPPLY/FS
	ARGYROULI FOTEINI
12.	DESIGNER OF WWTP/WATER SUPPLY/FS ALTERNATE
	ALEXIOU STAVROULA
13.	PROCESS DESIGNER OF WWTP
	ALEXIOU STAVROULA
14.	PROCESS DESIGNER OF WWTP ALTERNATE
	ARGYROULI FOTEINI

09/12/18

Resume of Proposed Personnel

The Tenderer shall provide all the information requested below for each of the personnel listed the schedule of the Contractor's Personnel. Fields with asterix (*) shall be used for evaluation.

In case of a JVCA the form shall be submitted for each partner of the JVCA.

Position* **CONTRACTOR'S REPRESENTATIVE**		
Personnel information	Name * **KARKANIA STAMATIA**	Date of birth **01.05.1954**
	Professional qualifications **MINISTRY OF HIGHER TECHNOLOGICAL AND VOCATIONAL EDUCATION (KATEE) OF LARISSA** **DEPARTMENT OF MECHANICAL ENGINEERING** **GRADUATED MECHANICAL ENGINEER**	
Present employment	Name of Employer **KARKANIAS ENVIROMENTAL TECHNOLOGY S.A**	
	Address of Employer **INDUSTRIAL AREA OF LARISA, POSTAL CODE 41004, BOX 3053 GREECE**	
	Telephone **+30 2410 541386**	Contact (manager / personnel officer) **VASILIKI KARKANIA CEO**
	Fax **+30 2410 541354**	E-mail **info@karkanias.gr**
	Job title **MECHANICAL ENGINEER, MEMBER OF THE BOARD AND LEGAL REPRESENTATIVE**	Years with present *Employer* ***23***

Summarize professional experience in reverse chronological order. Indicate particular technical and managerial experience relevant to the project.

From*	To*	Company, Project , Position, and Relevant Technical and Management Experience*
TODAY	2008	EMPLOYER: KARKANIAS - ENVIRONMENTAL TECHNOLOGY S.A. POSITION: GENERAL SUPERVISOR OF ALL THE MECHANICAL ENGINEERS OF THE PROJECTS OF THE COMPANY
2007	2006	LOCATION: MUNICIPALITY OF FILIPPIADA, GREECE EMPLOYER: KARKANIAS - ENVIRONMENTAL TECHNOLOGY S.A. POSITION: SITE STUFF PROJECT: WASTE WATER TREATMENT PLANT OF THE FILIPPIADA MUNICIPALITY, GREECE
2006	2005	LOCATION: LAMIA, GREECE EMPLOYER: KARKANIAS - ENVIRONMENTAL TECHNOLOGY S.A. POSITION: SITE STUFF PROJECT: IMPROVEMENT OF WASTE WATER TREATMENT PLANT OF LAMIA (66.700 PE), GREECE
2005	2005	LOCATION; SKIATHOS ISLAND EMPLOYER: KARKANIAS - ENVIRONMENTAL TECHNOLOGY S.A. POSITION: SITE STUFF PROJECT: CONSTRUCTION OF THE WWTP OF KOUKOUNARIES (SKIATHOS ISLAND)/GREECE

03/12/10

2002	2001	LOCATION: ALMYROS, GREECE EMPLOYER: KARKANIAS - ENVIRONMENTAL TECHNOLOGY S.A. POSITION: SITE STUFF PROJECT: WWTP ALMYROS MUNICIPALITY AND ITS SURROUNDING AREA (18.000PE)/GREECE
2001	2000	LOCATION:POLYKASTRO, GREECE EMPLOYER: KARKANIAS - ENVIRONMENTAL TECHNOLOGY S.A. POSITION: SITE STUFF PROJECT: WASTE WATER TREATMENT PLANT OF THE MUNICIPALITIES OF POLYKASTRO AND AXIOUPOLI (12.800 PE), GREECE
2000	1998	LOCATION: LEPTOKARIA, GREECE EMPLOYER: KARKANIAS - ENVIRONMENTAL TECHNOLOGY S.A. POSITION: SITE STUFF PROJECT: WASTE WATER TREATMENT PLANT OF THE REGION OF SOUTH PIERIA (150.000 PE), GREECE

03/12/18

Position* **CONTRACTOR'S REPRESENTATIVE ALTERNATE**		
Personnel information	Name * **KARANIKA ATHINA**	Date of birth **21.11.1971**
	Professional qualifications **ARISTOTLE UNIVERSITY OF THESSALONIKI** **FACULTY OF ENGINEERING** **CIVIL ENGINEER MSc**	
Present employment	Name of Employer **KARKANIAS ENVIROMENTAL TECHNOLOGY S.A**	
	Address of Employer **INDUSTRIAL AREA OF LARISA, POSTAL CODE 41004, BOX 3053 GREECE**	
	Telephone **+30 2410 541386**	Contact (manager / personnel officer) **VASILIKI KARKANIA CEO**
	Fax **+30 2410 541354**	E-mail **info@karkanias.gr**
	Job title **Member of Executives of the company for the construction of Public and Private Projects of the company**	Years with present *Employer* ***15***

Summarize professional experience in reverse chronological order. Indicate particular technical and managerial experience relevant to the project.

From*	To*	Company, Project , Position, and Relevant Technical and Management Experience*
2017	2015	LOCATION: PODGORICA,MONTENEGRO EMPLOYER: KARKANIAS - ENVIRONMENTAL TECHNOLOGY S.A. POSITION: PROJECT MANAGER PROJECT: DESING AND BUILD OF LEACHATE TREATMENT PLANT AT "LIVADE" LANDFILL IN PODGORICA MONTENEGRO
2015	2014	LOCATION:LEIANOKLADI, GREECE EMPLOYER: KARKANIAS - ENVIRONMENTAL TECHNOLOGY S.A. POSITION: PROJECT MANAGER-SITE MANAGER PROJECT: WASTE WATER TREATMENT PLANT OF LEIANOKLADI AND YPATI,(10.000 PE),GREECE
2009	2007	LOCATION: AGIA, GREECE EMPLOYER: KARKANIAS - ENVIRONMENTAL TECHNOLOGY S.A. POSITION: PROJECT MANAGER-SITE MANAGER PROJECT:WASTE WATER TREATMENT PLANT OF AGIA (12.000 PE), GREECE
2007	2005	LOCATION: LAMIA, GREECE EMPLOYER: KARKANIAS - ENVIRONMENTAL TECHNOLOGY S.A. POSITION: SITE MANAGER, PROJECT: IMPROVEMENT OF WASTE WATER TREATMENT PLANT OF LAMIA (66.700 PE), GREECE
2005	2001	LOCATION: ALMYROS, GREECE EMPLOYER: KARKANIAS - ENVIRONMENTAL TECHNOLOGY S.A. POSITION: PROJECT MANAGER –SITE MANAGER PROJECT: WWTP ALMYROS MUNICIPALITY AND ITS SURROUNDING AREA (18.000PE)/GREECE

03/12/18

2000	2000	LOCATION:POLYKASTRO, GREECE EMPLOYER: KARKANIAS - ENVIRONMENTAL TECHNOLOGY S.A. POSITION: SITE STUFF PROJECT: WASTE WATER TREATMENT PLANT OF THE MUNICIPALITIES OF POLYKASTRO AND AXIOUPOLI (12.800 PE), GREECE
2000	1998	LOCATION: LEPTOKARIA, GREECE EMPLOYER: KARKANIAS - ENVIRONMENTAL TECHNOLOGY S.A. POSITION: SITE STUFF PROJECT: WASTE WATER TREATMENT PLANT OF THE REGION OF SOUTH PIERIA (150.000 PE), GREECE

03/12/18

Position* **SITE MANAGER**		
Personnel information	Name * **KARANIKA ATHINA**	Date of birth **21.11.1971**
	Professional qualifications **ARISTOTLE UNIVERSITY OF THESSALONIKI** **FACULTY OF ENGINEERING** **CIVIL ENGINEER MSc**	
Present employment	Name of Employer **KARKANIAS ENVIROMENTAL TECHNOLOGY S.A**	
	Address of Employer **INDUSTRIAL AREA OF LARISA, POSTAL CODE 41004, BOX 3053 GREECE**	
	Telephone **+30 2410 541386**	Contact (manager / personnel officer) **VASILIKI KARKANIA CEO**
	Fax **+30 2410 541354**	E-mail **info@karkanias.gr**
	Job title **Member of Executives of the company for the construction of Public and Private Projects of the company**	Years with present *Employer* ***15***

Summarize professional experience in reverse chronological order. Indicate particular technical and managerial experience relevant to the project.

From*	To*	Company, Project , Position, and Relevant Technical and Management Experience*
2017	2015	LOCATION: PODGORICA,MONTENEGRO EMPLOYER: KARKANIAS - ENVIRONMENTAL TECHNOLOGY S.A. POSITION: PROJECT MANAGER PROJECT: DESING AND BUILD OF LEACHATE TREATMENT PLANT AT "LIVADE" LANDFILL IN PODGORICA MONTENEGRO
2015	2014	LOCATION:LEIANOKLADI, GREECE EMPLOYER: KARKANIAS - ENVIRONMENTAL TECHNOLOGY S.A. POSITION: PROJECT MANAGER-SITE MANAGER PROJECT: WASTE WATER TREATMENT PLANT OF LEIANOKLADI AND YPATI,(10.000 PE),GREECE
2009	2007	LOCATION: AGIA, GREECE EMPLOYER: KARKANIAS - ENVIRONMENTAL TECHNOLOGY S.A. POSITION: PROJECT MANAGER-SITE MANAGER PROJECT:WASTE WATER TREATMENT PLANT OF AGIA (12.000 PE), GREECE
2007	2005	LOCATION: LAMIA, GREECE EMPLOYER: KARKANIAS - ENVIRONMENTAL TECHNOLOGY S.A. POSITION: SITE MANAGER, PROJECT: IMPROVEMENT OF WASTE WATER TREATMENT PLANT OF LAMIA (66.700 PE), GREECE
2005	2001	LOCATION: ALMYROS, GREECE EMPLOYER: KARKANIAS - ENVIRONMENTAL TECHNOLOGY S.A. POSITION: PROJECT MANAGER –SITE MANAGER PROJECT: WWTP ALMYROS MUNICIPALITY AND ITS SURROUNDING AREA (18.000PE)/GREECE
2000	2000	LOCATION:POLYKASTRO, GREECE EMPLOYER: KARKANIAS - ENVIRONMENTAL TECHNOLOGY S.A. POSITION: SITE STUFF PROJECT: WASTE WATER TREATMENT PLANT OF THE MUNICIPALITIES OF POLYKASTRO AND AXIOUPOLI (12.800 PE), GREECE

03/12/18

2000	1998	LOCATION: LEPTOKARIA, GREECE EMPLOYER: KARKANIAS - ENVIRONMENTAL TECHNOLOGY S.A. POSITION: SITE STUFF PROJECT: WASTE WATER TREATMENT PLANT OF THE REGION OF SOUTH PIERIA (150.000 PE), GREECE

03/12/18

Position* **SITE MANAGER ALTERNATE**		
Personnel information	Name * **GLEZOS FLORIOS**	Date of birth **26.01.1957**
	Professional qualifications **NATIONAL TECHNICAL UNIVERSITY OF ATHENS** **CIVIL ENGINEER**	
Present employment	Name of Employer **KARKANIAS ENVIROMENTAL TECHNOLOGY S.A**	
	Address of Employer **INDUSTRIAL AREA OF LARISA, POSTAL CODE 41004, BOX 3053 GREECE**	
	Telephone **+30 2410 541386**	Contact (manager / personnel officer) **VASILIKI KARKANIA CEO**
	Fax **+30 2410 541354**	E-mail **info@karkanias.gr**
	Job title **Member of Executives of the company for the construction of Public and Private Projects of the company**	Years with present *Employer* ***6***

Summarize professional experience in reverse chronological order. Indicate particular technical and managerial experience relevant to the project.

From*	To*	Company, Project , Position, and Relevant Technical and Management Experience*
2017	2011	EMPLOYER: KARKANIAS - ENVIRONMENTAL TECHNOLOGY S.A. POSITION: GENERAL SUPERVISOR OF ALL THE CIVIL ENGINEERS OF THE PROJECTS OF THE COMPANY
2011	2011	Commercial warehouse including offices in Rykia, Aspropyrgos (2011)
2009	2003	Primary School & Nursery on Anthousa, Attiki (2003-2009)
2008	2003	Expansion and Modernization of the Archaeological Museum of Ioannina (MINISTRY OF CULTURE 2003-2008)
2008	2004	Construction of a six-storey building with three basements for the Criminal Investigations Department of the Greek Police Headquarters CGC (Estate State company) (2004-2008)
2008	2002	Extension of Metro Line 3 Ethini Amyna – Stavros, Attiki - Civil Works (CON 02/007) (2002-2008)
2007	2003	Foundation Board of the New Acropolis Museum (2003-2007)
2007	200	Extension of the 6th Deck on Thessaloniki's Port Phase AI - Part A (ThPA 2000-2007)
2005	1999	Construction of a protected building, center of air operations CARS (YPEPA 1999-2005)
2005	2001	Configuration open spaces of the Olympic Village and other complementary works - Section B (OX AE 2001-2005)
2005	2001	Construction of the Olympic Village and post-Olympic adaptation - Section B '600 homes and infrastructure (OX AE 2001-2005)
2005	2004	New terminal building and landscaping of Kalymnos airport (2004-2005)
2005	2003	VILLAGE TYPE 2004 – Maroussi, Attiki - Residential Construction of Sector Buildings C03, C04, C05, D01, D02, D03 & D04 (2003-2005)
2005	2005	Maintenance of the existing railway track Pyrgos - Kyparissia (OSE SA 2005)

03/12/19

2004	2001	Aesthetic Integration of Olympic Sports Center of Athens (OAKA): Special Construction (EYDE / AOEE 2001-2004)
2004	2002	Operation - Maintenance of Sewage Treatment Plant Aggelochori (2002-2004)
2004	2002	Additional works construction for the Section Line Infrastructure Ano Liosia-Thriasio (PM 159) (OSE SA PROJECTS 2002-2004)
2003	1999	New cargo terminal of Olympic Airways at Spata "CARGO" (EM N A / OA 1999-2003)
2003	1999	New elevated supply unit in the new Athens International Airport Eleftherios Venizelos (OLYMPIC CATERING SA 1999-2003)
2002	1996	Building on the corner of Chandri 1 and Thessaloniki Str. in Mosxato, Attiki for housing KEPYO (1996-2002)
2002	1996	Wastewater Treatment Plant Municipality of Patras (DEYAP 1996-2002)
2001	2000	Subsea Pipeline Distribution Treated Wastewater WWTP of Patra and Associated Works (DEYAP 2000-2001)
1998	1998	Design - Construction regarding damage restoration in load-bearing structure of the road deck above the temple M. King John the Baptist (Aimos Thessaloniki) (1998)
1997	1995	Construction and electrical / mechanical restoration and conversion of the Vafia Archaeological Museum in Kimolos (Ministry of Culture, 1995-1997)
1997	1995	Wastewater Treatment Plant City of Agrinio (DEYA 1995-1997)
1997	1997	Road Construction of Kallisti Palladium (1997)
1997	1997	Landslide restoration upstream Ardameriou Community's football stadium (Community Ardameriou) (1997)
1996		Multi-storey office building on the corner of the Avenues Syggrou, Tagmatarxou Plessa - demolition work, excavation and shoring (TENSOR) (1996)
1995	1995	Marking of Athens (Municipality of Athens 1995)
1995	1993	Construction of fishing shelter on K. Pyrgos (Retail Price HERAKLION 1993-1995)
1994	1992	Organic Cleaning, Association Communities Filoti Chalkeia Damargiona (Cyclades Prefecture 1992-1994)
1994	1992	Reservoir Havgas Lassithi Plateau (Ministry of Agriculture 1992-1994)
1993	1993	Building Construction T / K B FANEROMENIS (OTE 1993)
1993	1989	Out of the river Reservoir Theopoiitou, Samos (Ministry of Agriculture 1989-1993)
1992	1992	Pilot trial of WWTP ODAZ (Municipality of Zakynthos 1992)
1992	1992	Configuration of Shooting Center, Kaisariani (Athens Prefecture 1992)
1992	1992	Construction of Kranidi firewall (Argolida Prefecture 1992)
1992	1992	Repair and maintenance of the Prefecture building in Cyclades(Prefecture of Cyclades 1992)
1990	1989	Construction of A / D Eggaron Center, Naxos (OTE 1989-1990)
1989	1989	Configuration of Cathedral Square (Municipality of Naxos 1989)
1988	1988	Construction of heliports in Mykonos (736 DSE 1988)
1987	1987	Sewage, Potamia (Cyclades Prefecture 1987)
1986	1986	Water Supply, Coronis (Cyclades Prefecture 1986)
1986	1986	Road Opening Ekso Xorio (District Cyclades 1986)
1985	1983	Water Supply - Sewage of the village Aperathou, Naxos (Cyclades Prefecture 1983-1985)
1992	1992	Construction of Kranidi firewall (Argolida Prefecture 1992)

03/12/18

1992	1992	Repair and maintenance of the Prefecture building in Cyclades(Prefecture of Cyclades 1992)
1990	1989	Construction of A / D Eggaron Center, Naxos (OTE 1989-1990)
1989	1989	Configuration of Cathedral Square (Municipality of Naxos 1989)
1988	1988	Construction of heliports in Mykonos (736 DSE 1988)
1987	1987	Sewage, Potamia (Cyclades Prefecture 1987)
1986	1986	Water Supply, Coronis (Cyclades Prefecture 1986)
1986	1986	Road Opening Ekso Xorio (District Cyclades 1986)
1985	1983	Water Supply - Sewage of the village Aperathou, Naxos (Cyclades Prefecture 1983-1985)

03/12/18

Position* **LAND SURVEYOR**		
Personnel information	Name * **IAKOVAKIS KONSTANTINOS**	Date of birth **29.06.1965**
	Professional qualifications **ARISTOTLE UNIVERSITY OF THESSALONIKI** **FACULTY OF ENGINEERING** **RURAL AND SURVEYOR ENGINEER**	
Present employment	Name of Employer **Free lancer**	
	Address of Employer **NIKITARA 35, LARISSA**	
	Telephone **+30 2410 239002**	Contact (manager / personnel officer) **IAKOVAKIS KONSTANTINOS**
	Fax **+30 2410 239002**	E-mail **iakovakis.elem@gmail.com**
	Job title **RURAL AND SURVEYOR ENGINEER**	Years with present *Employer* **25**

Summarize professional experience in reverse chronological order. Indicate particular technical and managerial experience relevant to the project.

From*	To*	Company, Project , Position, and Relevant Technical and Management Experience*
TODAY	1999	Public and Private Projects (Surveying and Hydraulic Projects)
2017	2017	EMPLOYER: KARKANIAS - ENVIRONMENTAL TECHNOLOGY S.A. PROJECT: "STUDY – CONSTAUCTION FOR THE UPGRADE-EXTENSION OF THE WASTE WATER CLEANING PLANT IN AR. OF LARISSA POSITION: LAND SURVEYOR ENGINEER
2016	2015	EMPLOYER: KARKANIAS - ENVIRONMENTAL TECHNOLOGY S.A. PROJECT: Landfill extension of the urban area of Volos POSITION: LAND SURVEYOR ENGINEER
2015	2014	EMPLOYER: KARKANIAS - ENVIRONMENTAL TECHNOLOGY S.A. PROJECT: Rehabilitation of the Landfill of the Kilkis Municipality POSITION: LAND SURVEYOR ENGINEER
2014	2012	MUNICIPALITY OF KILELER, GREECE PROJECT: DETERMINATION-CERTIFICATION WORKS POSITION: LAND SURVEYOR ENGINEER
2012	2012	MUNICIPALITY OF MELIVIA PROJECT: WORKS FOR THE MUNICIPALITY(PREVENTION FROM FLOOD)
2011	2008	EMPLOYER: KTIMA.GP PROJECT: STUDY OF GEOGRAPHICAL INFORMATION SYSTEMS (G.I.S.) FOR THE MUNICIPALITIES OF LAMIA,KARDITSA,LARISSA,VOLOU
2005	2005	MUNICIPALITY OF SAMOTHRAKI, GREECE PROJECT: EFFLUENT PIPELINE OF WWTP OF SAMOTHRAKI POSITION:LAND SURVEYOR –HYDRAULIC ENGINEER
2003	2002	MUNICIPALITY OF AGIA, LARISSA, GREECE PROJECT:WWTP POSITION:DESIGNER LAND SURVEYOR–HYDRAULIC ENGINEER
2002	2002	MUNICIPALITY OF MPALOS, CRETE, GREECE PROJECT:WWTP OF MPALOS, SEWAGE NETWORK POSITION:DESIGNER LAND SURVEYOR –HYDRAULIC ENGINEER
1999	1995	Ministry of the Environment, Physical Planning and Public Works - Region of Thessaly Position: Surveying Engineer Responsibilities: Supervisor in projects and studies of road and hydraulic works

03/12/18

1994	1993	Ministry of Culture Position: Surveying Engineer Responsibilities: Impression of the monasteries of Meteora and other Byzantine and modern monuments.
1994	1993	Ministry of Agriculture Position: Surveying Engineer Responsibilities - Responsibilities: Responsible Survey Engineer in reforestations of the Prefecture of Larissa

03/12/18

Position* **LAND SURVEYOR ALTERNATE**		
Personnel information	Name * **VALARIS DIMITRIOS**	Date of birth **04.04.1964**
	Professional qualifications **ARISTOTLE UNIVERSITY OF THESSALONIKI** **FACULTY OF ENGINEERING** **RURAL AND SURVEYOR ENGINEER**	
Present employment	Name of Employer **Free lancer**	
	Address of Employer **DIOGENOUS 4, LARISSA**	
	Telephone **+30 2410 257457**	Contact (manager / personnel officer) **VALARIS DIMITRIOS**
	Fax **+30 2410 257461**	E-mail **dxvalarism@gmail.com**
	Job title **RURAL AND SURVEYOR ENGINEER**	Years with present *Employer* **24**

Summarize professional experience in reverse chronological order. Indicate particular technical and managerial experience relevant to the project.

From*	To*	Company, Project , Position, and Relevant Technical and Management Experience*
TODAY	1993	Public and Private Projects (Surveying, Hydraulic, road Projects)
TODAY	2017	EMPLOYER: UNITED ASSOCIATION OF MANAGEMENT OF SOLID WASTE OF REGION OF LARISSA PROJECT: OPERATION OF LANDFILL OF LARISSA POSITION: LAND SURVEYOR ENGINEER (MEASUREMENTS OF VOLUMES OF SOLID WASTE, SEDIMENTATIONS ETC)
2016	2016	EMPLOYER: MINISTRY OF CULTURE PROJECT:ANCIENT EXCHANGES OF CASTLE OF VELICA, REGION OF LARISSA POSITION :SURVEYOR ENGINEER
2014	2014	MUNICIPALITY OF TYRNAVOS, GREECE PROJECT: PROPERTIES OF REGION OF AMPELONA POSITION: LAND SURVEYOR ENGINEER (DIGITATION OF DATA)
2014	2014	EMPLOYER: UNITED ASSOCIATION OF MANAGEMENT OF SOLID WASTE OF REGION OF LARISSA PROJECT: LANDFILL OF LARISSA POSITION: SURVEYOR ENGINEER (MEASUREMENTS OF CELLS)
2011	2006	EMPLOYER: KARKANIAS - ENVIRONMENTAL TECHNOLOGY S.A. PROJECT: WASTE WATER TREATMENT PLANT OF AGIA, GREECE POSITION: LAND SURVEYOR WORKS
2010	2010	MUNICIPALITY OF ELASONA GREECE PROJECT:NATIONAL ROAD ELASSONA-LEFKI POSITION: LAND SURVEYOR ENGINEER , FINAL STUDY
2010	2010	MUNICIPALITY OF POTAMIA, GREECE PROJECT:NATIONAL ROAD ELASSONA-LEFKI POSITION: LAND SURVEYOR ENGINEER , STUDY FOR THE ARRANGEMENT OF STREAM "MANA"
2009	2008	EMPLOYER: KTIMA.GP PROJECT: STUDY OF GEOGRAPHICAL INFORMATION SYSTEMS (G.I.S.) FOR THE MUNICIPALITIES OF LAMIA,KARDITSA,LARISSA,VOLOU

03/12/18

2009	2009	EMPLOYER:PREFECTURE OF LARISSA PROJECT: WORKS FOR FLOOD PROTECTION OF VILLAGE RODIA POSITION: LAND SURVEYOR WORKS
2008	2007	MUNICIPALITIES OF AGIA, NESSONA, ELASONA PROJECTS: GENERAL URBAN PLANS POSITION: LAND SURVEYOR WORKS (COMPILATION OF LAND BACKGRAOUNDS AND MAKING MAPS)
2007	1993	SEVERAL LAND SURVEYOR WORKS FOR HYDRAULIC AND ROAD WORKS

03/12/18

Position **CONSTRUCTION ENGINEER**		
Personnel information	Name * **POUTSIAKAS APOSTOLOS**	Date of birth **08.04.1983**
	Professional qualifications **ARISTOTLE UNIVERSITY OF THESSALONIKI** **FACULTY OF ENGINEERING** **CIVIL ENGINEER MSc**	
Present employment	Name of Employer **KARKANIAS ENVIROMENTAL TECHNOLOGY S.A**	
	Address of Employer **INDUSTRIAL AREA OF LARISA, POSTAL CODE 41004, BOX 3053 GREECE**	
	Telephone **+30 2410 541386**	Contact (manager / personnel officer) **GEORGIOS KARKANIAS**
	Fax **+30 2410 541354**	E-mail **info@karkanias.gr**
	Job title **CIVIL ENGINEER**	Years with present *Employer* ***8***

Summarize professional experience over the last 20 years, in reverse chronological order. Indicate particular technical and managerial experience relevant to the project.

From*	To*	Company, Project , Position, and Relevant Technical and Management Experience*
TODAY	2016	EMPLOYER: KARKANIAS - ENVIRONMENTAL TECHNOLOGY S.A. PROJECT: Landfill extension of the island of Kos,GREECE POSITION: PROJECT MANAGER
2016	2015	EMPLOYER: KARKANIAS - ENVIRONMENTAL TECHNOLOGY S.A. PROJECT: WASTE WATER TREATMENT PLANT OF MOLOS SETTLEMENT, GREECE POSITION: MEMBER OF SITE CONSTRUCTION STUFF
2016	2015	EMPLOYER: KARKANIAS - ENVIRONMENTAL TECHNOLOGY S.A. PROJECT: "B' Phase of the Sanitary Landfill of the Trikala prefecture & its infrastructures" POSITION: MEMBER OF SITE CONSTRUCTION STUFF
2015	2014	EMPLOYER: KARKANIAS - ENVIRONMENTAL TECHNOLOGY S.A. PROJECT: Wastewater Treatment Plant of Kallirachi in Thassos,GREECE POSITION: SITE MANAGER
2014	2013	EMPLOYER: KARKANIAS - ENVIRONMENTAL TECHNOLOGY S.A. PROJECT: Upgrading of existing Wastewater Treatment Plant of Municipality of Makrakomi,GREECE POSITION: SITE MANAGER
2012	2011	EMPLOYER: KARKANIAS - ENVIRONMENTAL TECHNOLOGY S.A. PROJECT: Construction of the 4th Phase of Landfill of the City of Larisa,GREECE POSITION: SITE MANAGER
2011	2011	EMPLOYER: KARKANIAS ENVIRONMENTAL TECHNOLOGY S.A. POSITION: MEMBER OF SITE CONSTRUCTION STUFF PROJECT: EXTENSION OF WASTEWATER TREATMENT PLANT OF LAMIA GREECE
2010	2009	EMPLOYER: KARKANIAS - ENVIRONMENTAL TECHNOLOGY S.A. PROJECT: Design, Construction and Operation (for 6 Months) of the Landfill of Kos Island POSITION: MEMBER OF SITE CONSTRUCTION STUFF
2009	2007	Freelancer - Various technical studies for works-projects of Greek Army

03/12/18

Position* **CONSTRUCTION ENGINEER ALTERNATE**		
Personnel information	Name * **MARGARITIS VASILEIOS**	Date of birth **14.06.1985**
	Professional qualifications **DEMOCRITUS UNIVERSITY OF THRACE** **FACULTY OF ENGINEERING** **CIVIL ENGINEER**	
Present employment	Name of Employer **KARKANIAS ENVIROMENTAL TECHNOLOGY S.A**	
	Address of Employer **INDUSTRIAL AREA OF LARISA, POSTAL CODE 41004, BOX 3053 GREECE**	
	Telephone **+30 2410 541386**	Contact (manager / personnel officer) **GEORGIOS KARKANIAS**
	Fax **+30 2410 541354**	E-mail **info@karkanias.gr**
	Job title **CIVIL ENGINEER**	Years with present *Employer* **7**

Summarize professional experience in reverse chronological order. Indicate particular technical and managerial experience relevant to the project.

From*	To*	Company, Project , Position, and Relevant Technical and Management Experience*
2017	2015	EMPLOYER: KARKANIAS - ENVIRONMENTAL TECHNOLOGY S.A. PROJECT: DESING AND BUILD OF LEACHATE TREATMENT PLANT AT "LIVADE" LANDFILL IN PODGORICA MONTENEGRO POSITION: SITE MANAGER
2015	2015	EMPLOYER: KARKANIAS - ENVIRONMENTAL TECHNOLOGY S.A. PROJECT: "B' Phase of the Sanitary Landfill of the Trikala prefecture & its infrastructures" POSITION: MEMBER OF SITE CONSTRUCTION STUFF
2014	2014	EMPLOYER: KARKANIAS - ENVIRONMENTAL TECHNOLOGY S.A. POSITION: MEMBER OF SITE CONSTRUCTION STUFF PROJECT: WASTE WATER TREATMENT PLANT OF LEIANOKLADI AND YPATI,(10.000 PE),GREECE
2012	2010	EMPLOYER: KARKANIAS - ENVIRONMENTAL TECHNOLOGY S.A. PROJECT: Extension of WWTP of Lamia, GREECE POSITION: MEMBER OF SITE CONSTRUCTION STUFF
2012	2011	EMPLOYER: KARKANIAS - ENVIRONMENTAL TECHNOLOGY S.A. PROJECT: Extension of WWTP of Lamia (1st stage) POSITION: MEMBER OF SITE CONSTRUCTION STUFF

03/12/18

Position* **ELECTRICAL ENGINEER**		
Personnel information	Name * **KOSTAS MPEZEVEGKIS BASILEIOS**	Date of birth **25.05.1975**
	Professional qualifications **DEMOCRITUS UNIVERSITY OF THRACE** **ELECTRICAL & COMPUTER ENGINEERING SCHOOL** **ELECTRICAL & COMPUTER ENGINEER**	
Present employment	**Free lancer**	
	Address **IPSILANTI 18, FILLIPPIADA, POSTAL CODE 48200, GREECE**	
	Telephone **+30 2683300642**	Contact (manager / personnel officer)
	Fax **+30 2683300642**	E-mail **billkostas75@gmail.com**
	Job title **ELECTRICAL & COMPUTER ENGINEER**	Years with present *Employer*

Summarize professional experience in reverse chronological order. Indicate particular technical and managerial experience relevant to the project.

From*	To*	Company, Project , Position, and Relevant Technical and Management Experience*
TODAY	2016	"Wastewater Management Company G.P" Assosiate for Electrical services - works - repairs of works of the company
2016	2016	"Wastewater Management Company G.P" WWTP OF PARGA AND AKTIO, GREECE Responsible for the electrical services - works - repairs
2016	2016	"Wastewater Management Company G.P" WWTP OF FILLIPPIADA, GREECE Responsible for the electrical services - works - repairs
2016	2016	"Wastewater Management Company G.P" WWTP OF AMFILOCHIA, GREECE Responsible for the electrical services - works - repairs
2015	2013	"Operation and Maintenance of the Sewage Treatment Plant of the Municipality of Filippiada" Responsible Engineer for operation and maintenance monitoring in the project
2013	2010	JV ZIORIS SA- MESOGEIOS E.S. S.A "Operation and Maintenance of the wastewater treatment plant of the Municipality of Filippiada" Responsible engineer for operation and maintenance monitoring works in the project
2012	2010	"ZIORIS SA" "Operation and Maintenance of Wastewater Treatment Plant of the Municipality of Vonitsa" Responsible engineer for operation and maintenance monitoring works in the project
2010	2009	KARKANIAS ENVIROMENTAL TECHNOLOGY S.A "Operation and Maintenance of the Sewage Treatment Plant of the Municipality of Filippiada" Responsible Engineer for operation and maintenance monitoring in the project
2008	2005	J/V ZIORIS-TEGACAT.GEORGE GALANOPOYLOS Co LP "Construction of the big senior highschool of Igoumenitsa", GREECE Responsible for electrical works

03/12/18

Position* **ELECTRICAL ENGINEER ALTERNATE**		
Personnel information	Name * **GKAZGKANIS DIMITRIOS**	Date of birth **13.02.1984**
	Professional qualifications **TECNOLOGICAL EDUCATIONAL INSTITUTE OF LARISSA** **DEPARTMENT OF ELECTRICAL ENGINEERING** **ELECTRICAL ENGINEER**	
Present employment	Name of Employer **KARKANIAS ENVIROMENTAL TECHNOLOGY S.A**	
	Address of Employer **INDUSTRIAL AREA OF LARISA, POSTAL CODE 41004, BOX 3053 GREECE**	
	Telephone **+30 2410 541386**	Contact (manager / personnel officer) **GEORGIOS KARKANIAS**
	Fax **+30 2410 541354**	E-mail **info@karkanias.gr**
	Job title **ELECTRICAL ENGINEER**	Years with present *Employer* **7**

Summarize professional experience in reverse chronological order. Indicate particular technical and managerial experience relevant to the project.

From*	To*	Company, Project , Position, and Relevant Technical and Management Experience*
TODAY	2015	EMPLOYER: KARKANIAS - ENVIRONMENTAL TECHNOLOGY S.A. PROJECT: DESING AND BUILD OF LEACHATE TREATMENT PLANT AT "LIVADE" LANDFILL IN PODGORICA MONTENEGRO POSITION: RESPONSIBLE FOR ELECTRICAL WORKS
2016	2015	EMPLOYER: KARKANIAS - ENVIRONMENTAL TECHNOLOGY S.A. PROJECT: "B' Phase of the Sanitary Landfill of the Trikala prefecture & its infrastructures" POSITION: RESPONSIBLE FOR ELECTRICAL WORKS
2016	2012	EMPLOYER: KARKANIAS - ENVIRONMENTAL TECHNOLOGY S.A. PROJECT: : Rehabilitation of the Landfill of the Kilkis Municipality POSITION: RESPONSIBLE FOR ELECTRICAL WORKS
2014	2014	EMPLOYER: KARKANIAS - ENVIRONMENTAL TECHNOLOGY S.A. PROJECT: Wastewater Treatment Plant of Kallirachi in Thassos,GREECE POSITION: RESPONSIBLE FOR ELECTRICAL WORKS
2013	2013	EMPLOYER: KARKANIAS - ENVIRONMENTAL TECHNOLOGY S.A. PROJECT: Construction of the 4th Phase of Landfill of the City of Larisa POSITION: RESPONSIBLE FOR ELECTRICAL WORKS
2012	2011	EMPLOYER: KARKANIAS - ENVIRONMENTAL TECHNOLOGY S.A. PROJECT: Extension of WWTP of Lamia (1st stage) POSITION: RESPONSIBLE FOR ELECTRICAL WORKS
2012	2010	EMPLOYER: KARKANIAS - ENVIRONMENTAL TECHNOLOGY S.A. PROJECT: Extension of WWTP of Lamia, GREECE POSITION: RESPONSIBLE FOR ELECTRICAL WORKS
2009	2009	EMPLOYER: KARKANIAS - ENVIRONMENTAL TECHNOLOGY S.A. PROJECT: Design, Construction and Operation (for 6 Months) of the Landfill of Kos Island POSITION: RESPONSIBLE FOR ELECTRICAL WORKS

10/12/18

Position*DESIGNER OF WWTP/WATER SUPPLY/FS		
Personnel information	Name * **ARGYROULI FOTEINI**	Date of birth **18.05.1968**
	Professional qualifications **ARISTOTLE UNIVERSITY OF THESSALONIKI** **FACULTY OF ENGINEERING** **CHEMICAL ENGINEER MSc**	
Present employment	Name of Employer **FREE LANCER**	
	Address of Employer **6, Panagouli str., 41222, Larissa**	
	Telephone **+30 2410236263**	Contact (manager / personnel officer) **Foteini Argyrouli**
	Fax **+30 2410236263**	E-mail **argyf100@gmail.com**
	Job title **CHEMICAL ENGINEER**	Years with present Employer

Summarize professional experience in reverse chronological order. Indicate particular technical and managerial experience relevant to the project.

From*	To*	Company, Project, Position and Relevant Experience*
2016	2016	EMPLOYER: MUNICIPALITY OF KILELER PROJECT: Wastewater treatment plant of Nikaia POSITION: PROCESS DESIGN ENGINEER - Preliminary Design
2016	2016	EMPLOYER: MUNICIPALITY OF KILELER PROJECT: Environmental impact assessment of Wastewater treatment plant of Nikaia POSITION: ENVIRONMENTAL STUDY ENGINEER
2016	2016	EMPLOYER: MUNICIPALITY OF ALONNISOS ISLAND PROJECT: Environmental impact assessment of Fishing shelter at "Kalamakia" POSITION: ENVIRONMENTAL STUDY ENGINEER
2015	2015	EMPLOYER: MUNICIPALITY OF ALONNISOS ISLAND PROJECT: Environmental impact assessment of Fishing shelter at "Gerakas" POSITION: ENVIRONMENTAL STUDY ENGINEER
2015	2015	EMPLOYER: MUNICIPALITY OF ALONNISOS ISLAND PROJECT: Environmental impact assessment of Fishing shelter at "Votsi" POSITION: ENVIRONMENTAL STUDY ENGINEER
2015	2015	EMPLOYER: MUNICIPALITY OF TEMPI PROJECT: Wastewater treatment plant of Sikourio POSITION: PROCESS DESIGN ENGINEER - Preliminary Design
2014	2014	EMPLOYER: Municipal Water and Sewerage Company of Siteia PROJECT: Wastewater treatment plant of Paraspori POSITION: PROCESS DESIGN ENGINEER - Preliminary Design
2014	2014	EMPLOYER: COMBINE OF IOANNIS PAPAGIANNIS & CO – TZIKAS CONSTRUCTIONS PROJECT: Wastewater treatment plant of Polidendri POSITION: PROCESS DESIGN ENGINEER- Final Study
2014	2014	EMPLOYER: COMBINE OF TECHNODOMIKI AIGAIOU S.A. – D. KAFETZIS & CO PROJECT: Wastewater treatment plant of Nea Koutali POSITION: PROCESS DESIGN ENGINEER- Construction Study

03/12/18

2013	2013	EMPLOYER: MUNICIPALITY OF ELASSONA PROJECT: Environmental impact assessment of Wastewater treatment plant of Krania POSITION: ENVIRONMENTAL STUDY ENGINEER
2013	2013	EMPLOYER: MUNICIPALITY OF KITHNOS ISLAND PROJECT: Environmental impact assessment of Wastewater treatment plant of Dryopida and Kithnos POSITION: ENVIRONMENTAL STUDY ENGINEER
2013	2013	EMPLOYER: Municipal Water and Sewerage Company of Larissa PROJECT: Environmental impact assessment of Wastewater treatment plant of Rachoula POSITION: ENVIRONMENTAL STUDY ENGINEER
2013	2013	EMPLOYER: Municipal Water and Sewerage Company of Larissa PROJECT: Environmental impact assessment of Wastewater treatment plant of Amygdalea POSITION: ENVIRONMENTAL STUDY ENGINEER
2013	2013	EMPLOYER: MINAVRA TECHNIKI S.A. PROJECT: Wastewater treatment plant of Donousa Island POSITION: PROCESS DESIGN ENGINEER- Final Study
2013	2013	EMPLOYER: COSMOS CONSTRUCTION S.A. PROJECT: Wastewater treatment plant of Thirasia Island POSITION: PROCESS DESIGN ENGINEER - Final Study
2013	2013	EMPLOYER: MUNICIPALITY OF AVDIRA PROJECT: Wastewater treatment plant of Avdira POSITION: PROCESS DESIGN ENGINEER - Preliminary Design
2013	2013	EMPLOYER: MUNICIPALITY OF ELASSONA PROJECT: Wastewater treatment plant of Krania POSITION: PROCESS DESIGN ENGINEER - Preliminary Design
2013	2013	EMPLOYER: Municipal Water and Sewerage Company of Larissa PROJECT: Wastewater treatment plant of Rachoula POSITION: PROCESS DESIGN ENGINEER - Preliminary Design
2013	2013	EMPLOYER: Municipal Water and Sewerage Company of Larissa PROJECT: Wastewater treatment plant of Amygdalea POSITION: PROCESS DESIGN ENGINEER - Preliminary Design
2012	2012	EMPLOYER: PARASKEVOPOULOS PANAGIOTIS PROJECT: Wastewater treatment plant of Sapes POSITION: PROCESS DESIGN ENGINEER - Final Study
2012	2012	EMPLOYER: MUNICIPALITY OF KITHNOS ISLAND PROJECT: Wastewater treatment plant of Dryopida and Kithnos POSITION: PROCESS DESIGN ENGINEER - Preliminary Design
2012	2012	EMPLOYER: MUNICIPALITY OF TEMPI PROJECT: Environmental impact assessment of Irrigation network of Pirgetos and Aigani POSITION: ENVIRONMENTAL STUDY ENGINEER
2012	2012	EMPLOYER: PREFECTURE OF THESSALY PROJECT: Environmental impact assessment of Water Dam of Vrisia POSITION: ENVIRONMENTAL STUDY ENGINEER
2011	2011	EMPLOYER: Municipal Water and Sewerage Company of Larissa PROJECT: Environmental impact assessment of Biogas exploitation unit for energy production at Larissa's Landfill POSITION: ENVIRONMENTAL STUDY ENGINEER
2010	2010	EMPLOYER: MUNICIPALITY OF MOUZAKI PROJECT: Environmental impact assessment of Wastewater treatment plant of Drakotripa POSITION: ENVIRONMENTAL STUDY ENGINEER
2010	2010	EMPLOYER: MUNICIPALITY OF EVRIMENES PROJECT: Environmental impact assessment of Wastewater treatment plant of Stomio POSITION: ENVIRONMENTAL STUDY ENGINEER

03/12/10

2010	2010	EMPLOYER: MINISTRY OF CULTURE PROJECT: Environmental impact assessment of Messara's Archaeological Museum POSITION: ENVIRONMENTAL STUDY ENGINEER
2009	2009	EMPLOYER: MUNICIPALITY OF MESOLOURI PROJECT: Environmental impact assessment of Wastewater treatment plant of Mesolouri POSITION: ENVIRONMENTAL STUDY ENGINEER
2008	2008	EMPLOYER: MUNICIPALITY OF LARISSA PROJECT: Environmental impact assessment of "Karagiorga" road POSITION: ENVIRONMENTAL STUDY ENGINEER
2007	2007	EMPLOYER: MINISTRY OF CULTURE PROJECT: Environmental impact assessment of Byzantine – Christian Museum POSITION: ENVIRONMENTAL STUDY ENGINEER
2007	2007	EMPLOYER: MUNICIPALITY OF LARISSA PROJECT: Environmental impact assessment of "Karditsis" road POSITION: ENVIRONMENTAL STUDY ENGINEER
2006	2006	EMPLOYER: MUNICIPALITY OF MAKRYCHORI PROJECT: Environmental impact assessment of Kypselochori-Makrychori road POSITION: ENVIRONMENTAL STUDY ENGINEER
2006	2006	EMPLOYER: MUNICIPALITY OF POLYDAMANDAS PROJECT: Environmental impact assessment of Water borehole at Palaiomylos POSITION: ENVIRONMENTAL STUDY ENGINEER

03/12/18

Position* **DESIGNER OF WWTP/WATER SUPPLY/FS ALTERNATE**		
Personnel information	Name * **STAVROULA ALEXIOU**	Date of birth **22.09.1974**
	Professional qualifications **ARISTOTLE UNIVERSITY OF THESSALONIKI** **FACULTY OF ENGINEERING** **CHEMICAL ENGINEER MSc**	
Present employment	Name of Employer **KARKANIAS ENVIROMENTAL TECHNOLOGY S.A**	
	Address of Employer **INDUSTRIAL AREA OF LARISA, POSTAL CODE 41004, BOX 3053 GREECE**	
	Telephone **+30 2410 541386**	Contact (manager / personnel officer) **VASILIKI KARKANIA CEO**
	Fax **+30 2410 541354**	E-mail **info@karkanias.gr**
	Job title **CHEMICAL ENGINEER**	Years with present *Employer* ***17***

Summarize professional experience in reverse chronological order. Indicate particular technical and managerial experience relevant to the project.

From*	To*	Company, Project , Position, and Relevant Technical and Management Experience*
2017	2017	KARKANIAS - ENVIRONMENTAL TECHNOLOGY S.A. Application Technical study of the work "Study - Construction for the Upgrade - Extension of the Waste Water Cleaning Plant in the IN.AR. of Larissa". Technical company Colleague - Designer with the object the compilation of chemico-technical study for the construction of the work
2016	2016	KARKANIAS - ENVIRONMENTAL TECHNOLOGY S.A Offer Technical Study "Study - Construction for the Upgrade - Extension of the Waste Water Cleaning Plant in the IN.AR. of Larissa". Technical company Colleague - Designer with the object the compilation of chemico-technical study for the participation in the tender of ETVA IN.AR. S.A.
2015	2015	KARKANIAS - ENVIRONMENTAL TECHNOLOGY S.A Final Design of the work "Design and Construction of a Leachate Treatment Plant at Livade Landfill in Podgoritsa, Montenegro" of Deponija. Colleague - Designer of the contracting partnership with the object the compilation of the technological design.
2015	2015	KARKANIAS - ENVIRONMENTAL TECHNOLOGY S.A Offer Technical Study of the work "Extension of the Installations of the Biological Cleaning of Karpenisi" Technical company Colleague - Designer with the object the compilation of chemico-technical study for the participation in the tender of the Municipality of Karpenisi
2015	2014	KARKANIAS - ENVIRONMENTAL TECHNOLOGY S.A Final Study - Application Study of work "Waste Water Treatment Plant of the community of Molos" of the Municipality of Molos-Agios Konstantinos. Colleague - Designer of the contracting company with the object the compilation of the technological design.
2014	2014	KARKANIAS - ENVIRONMENTAL TECHNOLOGY S.A Application study of the work "Waste Water Treatment Plant of Leianokladi - Ypati" of DEYA (Municipal Water and Sewage Company) LAMIA. Colleague - Designer of the contracting company with the object the compilation of the technological design

03/12/18

2014	2014	KARKANIAS - ENVIRONMENTAL TECHNOLOGY S.A Final study of the work "Waste Water Treatment Plant of Leianokladi - Ypati" of DEYA LAMIA. Colleague - Designer of the contracting company with the object the compilation of the technological design
2014	2014	KARKANIAS - ENVIRONMENTAL TECHNOLOGY S.A Offer technical study of the work "Waste Water Treatment Plant of Agiokampos, Kato Sotiritsa and Velika of the M.U. of Melivoia". Technical company Colleague - Designer with the object the compilation of chemico-technical study for the participation in the tender of the Region of Thessaly-R.U. of Larissa-Technical works Dir/te
2013	2013	KARKANIAS - ENVIRONMENTAL TECHNOLOGY S.A Offer Technical Study of the work "Waste Water Treatment Plant of the community of Molos". Technical company Colleague - Designer with the object the compilation of chemico-technical study for the participation in the tender of the Municipality of Molos-Agios Kontantinos
2013	2013	KARKANIAS - ENVIRONMENTAL TECHNOLOGY S.A Offer Technical Study of the work "Waste Water Treatment Plant of Leianokladi - Ypati". Technical company Colleague - Designer with the object the compilation of chemico-technical study for the participation in the tender of DEYA LAMIA
2013	2013	KARKANIAS - ENVIRONMENTAL TECHNOLOGY S.A Offer Technical Study of the work "Extension of Waste Water Treatment Plant of the Municipality of Ioannina". Technical company Colleague - Designer with the object the participation in the compilation of chemico-technical study for the participation in the tender of DEYA IOANNINA
2013	2013	KARKANIAS - ENVIRONMENTAL TECHNOLOGY S.A Offer Technical Study of the work "Water supply of the eastern side of the Prefecture of Karditsa from the Smokovo lake: Water Storage and Treatment Works". Technical company Colleague - Designer with the object the participation in the compilation of chemico-technical study for the participation in the tender of the REGION OF THESSALY
2012	2012	KARKANIAS - ENVIRONMENTAL TECHNOLOGY S.A Offer Technical Study of the work "Waste Water Cleaning Plant of the Municipality of Spetses". Technical company Colleague - Designer with the object the participation in the compilation of chemico-technical study for the participation in the tender of the REGION OF ATTICA
2012	2012	KARKANIAS - ENVIRONMENTAL TECHNOLOGY S.A Offer Technical Study of the work "Waste Water Treatment Plant Construction of the community of Prosotsani". Technical company Colleague - Designer with the object the compilation of chemico-technical study for the participation in the tender of the Municipality of Prosotsani
2011	2011	KARKANIAS - ENVIRONMENTAL TECHNOLOGY S.A Offer Technical Study of the work "WASTE WATER TREATMENT PLANT OF KALAVRYTA". Technical company Colleague - Designer with the object the compilation of chemico-technical study for the participation in the tender of the DIRECTORATE OF TECHNICAL WORKS OF THE REGION OF WESTERN GREECE
2011	2011	KARKANIAS - ENVIRONMENTAL TECHNOLOGY S.A Offer Technical Study of the work "WASTE WATER TREATMENT PLANT OF THE MUNICIPALITY OF MOUZAKI". Technical company Colleague - Designer with the object the compilation of chemico-technical study for the participation in the tender
2007	2007	KARKANIAS - ENVIRONMENTAL TECHNOLOGY S.A Offer Technical Study of the work "Waste Water Treatment Plant of the Municipality Evrimenon". Technical company Colleague - Designer with the object the compilation of chemico-technical study for the participation in the tender

03/12/18

2007	2007	KARKANIAS - ENVIRONMENTAL TECHNOLOGY S.A Offer Technical Study of the work "Waste Water Treatment Plant of Pteleos - Pigadiou". Technical company Colleague - Designer with the object the compilation of chemico-technical study for the participation in the tender
2007	2007	KARKANIAS - ENVIRONMENTAL TECHNOLOGY S.A Updating of the Environmental Consequences Study of the work "Sanitary Landfill of the P. of Pelion". Study contractor
2007	2006	KARKANIAS - ENVIRONMENTAL TECHNOLOGY S.A Application study of the work "Waste Waster Treatment Plant of the Municipality of Farsala". Colleague - Designer of the contracting company with the object the compilation of the technological design.
2007	2006	KARKANIAS - ENVIRONMENTAL TECHNOLOGY S.A Application Study of the work "Biological Cleaning of the Municipality of Agia". Colleague - Designer of the contracting company with the object the compilation of the technological design.
2006	2006	MUNICIPALITY OF DOMOKOS Final study of the work "WASTE WATER TREATMENT PLANT OF THE MUNICIPALITY OF DOMOKOS". Contracting designer with the object the compilation of the chemico-technical study
2006	2006	KARKANIAS - ENVIRONMENTAL TECHNOLOGY S.A Offer technical study of the work "Waste Waster Treatment Plant of the Municipality of Farsala". Technical company Colleague - Designer with the object the compilation of chemico-technical study for the participation in the tender
2006	2006	KARKANIAS - ENVIRONMENTAL TECHNOLOGY S.A Waste water treatment and disposal study of the work "UPDATE AND EXTENSION OF THE BIOLOGICAL CLEANING OF THE MUNICIPAL SLAUGHTER HOUSE OF ALMYROS". Study contractor
2006	2006	KARKANIAS - ENVIRONMENTAL TECHNOLOGY S.A Offer Technical Study of the work "Biological Cleaning of the Municipality of Agia". Technical company Colleague - Designer with the object the compilation of chemico-technical study for the participation in the tender
2006	2006	MUNICIPALITY ELYMNION Compilation of final study and auction issues for the work "SEWAGE WATER RECEPTION AND PRETREATMENT PLANT OF THE BIOLOGICAL CLEANING INSTALLATIONS OF THE M.D. OF LIMNI". Study contractor
2005	2005	KARKANIAS - ENVIRONMENTAL TECHNOLOGY S.A Offer Technical Study of the work "Additional Works of the Waste Water Treatment Plant of the Municipality of Amyntaio". Technical company Colleague - Designer with the object the compilation of chemico-technical study for the participation in the tender
2005	2005	KARKANIAS - ENVIRONMENTAL TECHNOLOGY S.A Application study of the work "Waste Waster Treatment Plant of the Municipality of Filippiada". Colleague - Designer of the contracting company with the object the compilation of the chemico-technological design.
2005	2005	KARKANIAS - ENVIRONMENTAL TECHNOLOGY S.A Application Study of the work "Tertiary Waste Water Treatment Works aiming to the irrigation - treated waste water distribution network" of DEYA Kos. Colleague - Designer of the contracting company with the object the compilation of the technological design
2005	2005	KARKANIAS - ENVIRONMENTAL TECHNOLOGY S.A Application study of the work "Improvement of Biological Cleaning Installations of Lamia". Colleague - Designer of the contracting company with the object the compilation of the technological design
2004	2004	KARKANIAS - ENVIRONMENTAL TECHNOLOGY S.A Offer Technical Study of the work "Waste Waster Treatment Plant of the Municipality of Filippiada". Technical company Colleague - Designer with the object the compilation of chemico-technical study for the participation in the tender

03/12/18

2004	2004	KARKANIAS - ENVIRONMENTAL TECHNOLOGY S.A Offer Technical Study of the work "Improvement of the Biological Cleaning Installations of Lamia". Technical company Colleague - Designer with the object the compilation of chemico-technical study for its participation in the tender of DEYA LAMIA
2004	2004	MUNICIPALITY ELYMNION Compilation of prestudy of the work "Sewage Water Reception and Pretreatment in the Biological Cleaning Plant of Limni Euboea". Study contractor
2004	2004	MUNICIPALITY ELYMNION Compilation of the prestudy of the work "Repair of the E/M Equipment of the Biological Cleaning Plant of the Municipal District of Limni". Study contractor
2003	2003	KARKANIAS - ENVIRONMENTAL TECHNOLOGY S.A Offer Technical Study of the work "Extension of the Biological Cleaning Installations of Tyrnavos". Technical company Colleague - Designer with the object the compilation of chemico-technical study for the participation in the tender
2002	2002	KARKANIAS - ENVIRONMENTAL TECHNOLOGY S.A Application Study of the work "Supply and Installation of the Fast Refinery of Dramia". Colleague - Designer of the contracting company with the object the compilation of the technological design
2001	2001	KARKANIAS - ENVIRONMENTAL TECHNOLOGY S.A Offer Study of the work "Supply and Installation of the Fast Refinery of Dramia". Technical company Colleague - Designer with the object the compilation of chemico-technical study for the participation in the tender

Position* **PROCESS DESIGNER OF WWTP**		
Personnel information	Name * **STAVROULA ALEXIOU**	Date of birth **22.09.1974**
	Professional qualifications **ARISTOTLE UNIVERSITY OF THESSALONIKI** **FACULTY OF ENGINEERING** **CHEMICAL ENGINEER MSc**	
Present employment	Name of Employer **KARKANIAS ENVIROMENTAL TECHNOLOGY S.A**	
	Address of Employer **INDUSTRIAL AREA OF LARISA, POSTAL CODE 41004, BOX 3053 GREECE**	
	Telephone **+30 2410 541386**	Contact (manager / personnel officer) **VASILIKI KARKANIA CEO**
	Fax **+30 2410 541354**	E-mail **info@karkanias.gr**
	Job title **CHEMICAL ENGINEER**	Years with present *Employer* ***17***

Summarize professional experience in reverse chronological order. Indicate particular technical and managerial experience relevant to the project.

From*	To*	Company, Project , Position, and Relevant Technical and Management Experience*
2017	2017	KARKANIAS - ENVIRONMENTAL TECHNOLOGY S.A. Application Technical study of the work "Study - Construction for the Upgrade - Extension of the Waste Water Cleaning Plant in the IN.AR. of Larissa". Technical company Colleague - Designer with the object the compilation of chemico-technical study for the construction of the work
2016	2016	KARKANIAS - ENVIRONMENTAL TECHNOLOGY S.A Offer Technical Study "Study - Construction for the Upgrade - Extension of the Waste Water Cleaning Plant in the IN.AR. of Larissa". Technical company Colleague - Designer with the object the compilation of chemico-technical study for the participation in the tender of ETVA IN.AR. S.A.
2015	2015	KARKANIAS - ENVIRONMENTAL TECHNOLOGY S.A Final Design of the work "Design and Construction of a Leachate Treatment Plant at Livade Landfill in Podgoritsa, Montenegro" of Deponija. Colleague - Designer of the contracting partnership with the object the compilation of the technological design.
2015	2015	KARKANIAS - ENVIRONMENTAL TECHNOLOGY S.A Offer Technical Study of the work "Extension of the Installations of the Biological Cleaning of Karpenisi" Technical company Colleague - Designer with the object the compilation of chemico-technical study for the participation in the tender of the Municipality of Karpenisi
2015	2014	KARKANIAS - ENVIRONMENTAL TECHNOLOGY S.A Final Study - Application Study of work "Waste Water Treatment Plant of the community of Molos" of the Municipality of Molos-Agios Konstantinos. Colleague - Designer of the contracting company with the object the compilation of the technological design.
2014	2014	KARKANIAS - ENVIRONMENTAL TECHNOLOGY S.A Application study of the work "Waste Water Treatment Plant of Leianokladi - Ypati" of DEYA (Municipal Water and Sewage Company) LAMIA. Colleague - Designer of the contracting company with the object the compilation of the technological design
2014	2014	KARKANIAS - ENVIRONMENTAL TECHNOLOGY S.A Final study of the work "Waste Water Treatment Plant of Leianokladi - Ypati" of DEYA LAMIA. Colleague - Designer of the contracting company with the object the compilation of the technological design

03/12/18

2014	2014	KARKANIAS - ENVIRONMENTAL TECHNOLOGY S.A Offer technical study of the work "Waste Water Treatment Plant of Aglokampos, Kato Sotiritsa and Velika of the M.U. of Melivoia". Technical company Colleague - Designer with the object the compilation of chemico-technical study for the participation in the tender of the Region of Thessaly-R.U. of Larissa-Technical works Dir/te
2013	2013	KARKANIAS - ENVIRONMENTAL TECHNOLOGY S.A Offer Technical Study of the work "Waste Water Treatment Plant of the community of Molos". Technical company Colleague - Designer with the object the compilation of chemico-technical study for the participation in the tender of the Municipality of Molos-Agios Kontantinos
2013	2013	KARKANIAS - ENVIRONMENTAL TECHNOLOGY S.A Offer Technical Study of the work "Waste Water Treatment Plant of Leianokladi - Ypati". Technical company Colleague - Designer with the object the compilation of chemico-technical study for the participation in the tender of DEYA LAMIA
2013	2013	KARKANIAS - ENVIRONMENTAL TECHNOLOGY S.A Offer Technical Study of the work "Extension of Waste Water Treatment Plant of the Municipality of Ioannina". Technical company Colleague - Designer with the object the participation in the compilation of chemico-technical study for the participation in the tender of DEYA IOANNINA
2013	2013	KARKANIAS - ENVIRONMENTAL TECHNOLOGY S.A Offer Technical Study of the work "Water supply of the eastern side of the Prefecture of Karditsa from the Smokovo lake: Water Storage and Treatment Works". Technical company Colleague - Designer with the object the participation in the compilation of chemico-technical study for the participation in the tender of the REGION OF THESSALY
2012	2012	KARKANIAS - ENVIRONMENTAL TECHNOLOGY S.A Offer Technical Study of the work "Waste Water Cleaning Plant of the Municipality of Spetses". Technical company Colleague - Designer with the object the participation in the compilation of chemico-technical study for the participation in the tender of the REGION OF ATTICA
2012	2012	KARKANIAS - ENVIRONMENTAL TECHNOLOGY S.A Offer Technical Study of the work "Waste Water Treatment Plant Construction of the community of Prosotsani". Technical company Colleague - Designer with the object the compilation of chemico-technical study for the participation in the tender of the Municipality of Prosotsani
2011	2011	KARKANIAS - ENVIRONMENTAL TECHNOLOGY S.A Offer Technical Study of the work "WASTE WATER TREATMENT PLANT OF KALAVRYTA". Technical company Colleague - Designer with the object the compilation of chemico-technical study for the participation in the tender of the DIRECTORATE OF TECHNICAL WORKS OF THE REGION OF WESTERN GREECE
2011	2011	KARKANIAS - ENVIRONMENTAL TECHNOLOGY S.A Offer Technical Study of the work "WASTE WATER TREATMENT PLANT OF THE MUNICIPALITY OF MOUZAKI". Technical company Colleague - Designer with the object the compilation of chemico-technical study for the participation in the tender
2007	2007	KARKANIAS - ENVIRONMENTAL TECHNOLOGY S.A Offer Technical Study of the work "Waste Water Treatment Plant of the Municipality Evrimenon". Technical company Colleague - Designer with the object the compilation of chemico-technical study for the participation in the tender
2007	2007	KARKANIAS - ENVIRONMENTAL TECHNOLOGY S.A Offer Technical Study of the work "Waste Water Treatment Plant of Pteleos - Pigadiou". Technical company Colleague - Designer with the object the compilation of chemico-technical study for the participation in the tender

03/12/18

2007	2007	KARKANIAS - ENVIRONMENTAL TECHNOLOGY S.A Updating of the Environmental Consequences Study of the work "Sanitary Landfill of the P. of Pelion". Study contractor
2007	2006	KARKANIAS - ENVIRONMENTAL TECHNOLOGY S.A Application study of the work "Waste Waster Treatment Plant of the Municipality of Farsala". Colleague - Designer of the contracting company with the object the compilation of the technological design.
2007	2006	KARKANIAS - ENVIRONMENTAL TECHNOLOGY S.A Application Study of the work "Biological Cleaning of the Municipality of Agia". Colleague - Designer of the contracting company with the object the compilation of the technological design.
2006	2006	MUNICIPALITY OF DOMOKOS Final study of the work "WASTE WATER TREATMENT PLANT OF THE MUNICIPALITY OF DOMOKOS". Contracting designer with the object the compilation of the chemico-technical study
2006	2006	KARKANIAS - ENVIRONMENTAL TECHNOLOGY S.A Offer technical study of the work "Waste Waster Treatment Plant of the Municipality of Farsala". Technical company Colleague - Designer with the object the compilation of chemico-technical study for the participation in the tender
2006	2006	KARKANIAS - ENVIRONMENTAL TECHNOLOGY S.A Waste water treatment and disposal study of the work "UPDATE AND EXTENSION OF THE BIOLOGICAL CLEANING OF THE MUNICIPAL SLAUGHTER HOUSE OF ALMYROS". Study contractor
2006	2006	KARKANIAS - ENVIRONMENTAL TECHNOLOGY S.A Offer Technical Study of the work "Biological Cleaning of the Municipality of Agia". Technical company Colleague - Designer with the object the compilation of chemico-technical study for the participation in the tender
2006	2006	MUNICIPALITY ELYMNION Compilation of final study and auction issues for the work "SEWAGE WATER RECEPTION AND PRETREATMENT PLANT OF THE BIOLOGICAL CLEANING INSTALLATIONS OF THE M.D. OF LIMNI". Study contractor
2005	2005	KARKANIAS - ENVIRONMENTAL TECHNOLOGY S.A Offer Technical Study of the work "Additional Works of the Waste Water Treatment Plant of the Municipality of Amyntaio". Technical company Colleague - Designer with the object the compilation of chemico-technical study for the participation in the tender
2005	2005	KARKANIAS - ENVIRONMENTAL TECHNOLOGY S.A Application study of the work "Waste Waster Treatment Plant of the Municipality of Filippiada". Colleague - Designer of the contracting company with the object the compilation of the chemico-technological design.
2005	2005	KARKANIAS - ENVIRONMENTAL TECHNOLOGY S.A Application Study of the work "Tertiary Waste Water Treatment Works aiming to the irrigation - treated waste water distribution network" of DEYA Kos. Colleague - Designer of the contracting company with the object the compilation of the technological design
2005	2005	KARKANIAS - ENVIRONMENTAL TECHNOLOGY S.A Application study of the work "Improvement of Biological Cleaning Installations of Lamia". Colleague - Designer of the contracting company with the object the compilation of the technological design
2004	2004	KARKANIAS - ENVIRONMENTAL TECHNOLOGY S.A Offer Technical Study of the work "Waste Waster Treatment Plant of the Municipality of Filippiada". Technical company Colleague - Designer with the object the compilation of chemico-technical study for the participation in the tender

09/12/18

2004	2004	KARKANIAS - ENVIRONMENTAL TECHNOLOGY S.A Offer Technical Study of the work "Improvement of the Biological Cleaning Installations of Lamia". Technical company Colleague - Designer with the object the compilation of chemico-technical study for its participation in the tender of DEYA LAMIA
2004	2004	MUNICIPALITY ELYMNION Compilation of prestudy of the work "Sewage Water Reception and Pretreatment in the Biological Cleaning Plant of Limni Euboea". Study contractor
2004	2004	MUNICIPALITY ELYMNION Compilation of the prestudy of the work "Repair of the E/M Equipment of the Biological Cleaning Plant of the Municipal District of Limni". Study contractor
2003	2003	KARKANIAS - ENVIRONMENTAL TECHNOLOGY S.A Offer Technical Study of the work "Extension of the Biological Cleaning Installations of Tyrnavos". Technical company Colleague - Designer with the object the compilation of chemico-technical study for the participation in the tender
2002	2002	KARKANIAS - ENVIRONMENTAL TECHNOLOGY S.A Application Study of the work "Supply and Installation of the Fast Refinery of Dramia". Colleague - Designer of the contracting company with the object the compilation of the technological design
2001	2001	KARKANIAS - ENVIRONMENTAL TECHNOLOGY S.A Offer Study of the work "Supply and Installation of the Fast Refinery of Dramia". Technical company Colleague - Designer with the object the compilation of chemico-technical study for the participation in the tender

Position*PROCESS DESIGNER OF WWTP ALTERNATE		
Personnel information	Name * **ARGYROULI FOTEINI**	Date of birth **18.05.1968**
	Professional qualifications **ARISTOTLE UNIVERSITY OF THESSALONIKI** **FACULTY OF ENGINEERING** **CHEMICAL ENGINEER MSc**	
Present employment	Name of Employer **FREE LANCER**	
	Address of Employer **6, Panagouli str., 41222, Larissa**	
	Telephone **+30 2410236263**	Contact (manager / personnel officer) **Foteini Argyrouli**
	Fax **+30 2410236263**	E-mail **argyf100@gmail.com**
	Job title **CHEMICAL ENGINEER**	Years with present Employer **18 (as free lancer)**

Summarize professional experience in reverse chronological order. Indicate particular technical and managerial experience relevant to the project.

From*	To*	Company, Project, Position and Relevant Experience*
2016	2016	EMPLOYER: MUNICIPALITY OF KILELER PROJECT: Wastewater treatment plant of Nikaia POSITION: PROCESS DESIGN ENGINEER - Preliminary Design
2016	2016	EMPLOYER: MUNICIPALITY OF KILELER PROJECT: Environmental impact assessment of Wastewater treatment plant of Nikaia POSITION: ENVIRONMENTAL STUDY ENGINEER
2016	2016	EMPLOYER: MUNICIPALITY OF ALONNISOS ISLAND PROJECT: Environmental impact assessment of Fishing shelter at "Kalamakia" POSITION: ENVIRONMENTAL STUDY ENGINEER
2015	2015	EMPLOYER: MUNICIPALITY OF ALONNISOS ISLAND PROJECT: Environmental impact assessment of Fishing shelter at "Gerakas" POSITION: ENVIRONMENTAL STUDY ENGINEER
2015	2015	EMPLOYER: MUNICIPALITY OF ALONNISOS ISLAND PROJECT: Environmental impact assessment of Fishing shelter at "Votsi" POSITION: ENVIRONMENTAL STUDY ENGINEER
2015	2015	EMPLOYER: MUNICIPALITY OF TEMPI PROJECT: Wastewater treatment plant of Sikourio POSITION: PROCESS DESIGN ENGINEER - Preliminary Design
2014	2014	EMPLOYER: Municipal Water and Sewerage Company of Siteia PROJECT: Wastewater treatment plant of Paraspori POSITION: PROCESS DESIGN ENGINEER - Preliminary Design
2014	2014	EMPLOYER: COMBINE OF IOANNIS PAPAGIANNIS & CO – TZIKAS CONSTRUCTIONS PROJECT: Wastewater treatment plant of Polidendri POSITION: PROCESS DESIGN ENGINEER- Final Study
2014	2014	EMPLOYER: COMBINE OF TECHNODOMIKI AIGAIOU S.A. – D. KAFETZIS & CO PROJECT: Wastewater treatment plant of Nea Koutali POSITION: PROCESS DESIGN ENGINEER- Construction Study

03/12/18

2013	2013	EMPLOYER: MUNICIPALITY OF ELASSONA PROJECT: Environmental impact assessment of Wastewater treatment plant of Krania POSITION: ENVIRONMENTAL STUDY ENGINEER
2013	2013	EMPLOYER: MUNICIPALITY OF KITHNOS ISLAND PROJECT: Environmental impact assessment of Wastewater treatment plant of Dryopida and Kithnos POSITION: ENVIRONMENTAL STUDY ENGINEER
2013	2013	EMPLOYER: Municipal Water and Sewerage Company of Larissa PROJECT: Environmental impact assessment of Wastewater treatment plant of Rachoula POSITION: ENVIRONMENTAL STUDY ENGINEER
2013	2013	EMPLOYER: Municipal Water and Sewerage Company of Larissa PROJECT: Environmental impact assessment of Wastewater treatment plant of Amygdalea POSITION: ENVIRONMENTAL STUDY ENGINEER
2013	2013	EMPLOYER: MINAVRA TECHNIKI S.A. PROJECT: Wastewater treatment plant of Donousa Island POSITION: PROCESS DESIGN ENGINEER- Final Study
2013	2013	EMPLOYER: COSMOS CONSTRUCTION S.A. PROJECT: Wastewater treatment plant of Thirasia Island POSITION: PROCESS DESIGN ENGINEER - Final Study
2013	2013	EMPLOYER: MUNICIPALITY OF AVDIRA PROJECT: Wastewater treatment plant of Avdira POSITION: PROCESS DESIGN ENGINEER - Preliminary Design
2013	2013	EMPLOYER: MUNICIPALITY OF ELASSONA PROJECT: Wastewater treatment plant of Krania POSITION: PROCESS DESIGN ENGINEER - Preliminary Design
2013	2013	EMPLOYER: Municipal Water and Sewerage Company of Larissa PROJECT: Wastewater treatment plant of Rachoula POSITION: PROCESS DESIGN ENGINEER - Preliminary Design
2013	2013	EMPLOYER: Municipal Water and Sewerage Company of Larissa PROJECT: Wastewater treatment plant of Amygdalea POSITION: PROCESS DESIGN ENGINEER - Preliminary Design
2012	2012	EMPLOYER: PARASKEVOPOULOS PANAGIOTIS PROJECT: Wastewater treatment plant of Sapes POSITION: PROCESS DESIGN ENGINEER - Final Study
2012	2012	EMPLOYER: MUNICIPALITY OF KITHNOS ISLAND PROJECT: Wastewater treatment plant of Dryopida and Kithnos POSITION: PROCESS DESIGN ENGINEER - Preliminary Design
2012	2012	EMPLOYER: MUNICIPALITY OF TEMPI PROJECT: Environmental impact assessment of Irrigation network of Pirgetos and Aigani POSITION: ENVIRONMENTAL STUDY ENGINEER
2012	2012	EMPLOYER: PREFECTURE OF THESSALY PROJECT: Environmental impact assessment of Water Dam of Vrisia POSITION: ENVIRONMENTAL STUDY ENGINEER
2011	2011	EMPLOYER: Municipal Water and Sewerage Company of Larissa PROJECT: Environmental impact assessment of Biogas exploitation unit for energy production at Larissa's Landfill POSITION: ENVIRONMENTAL STUDY ENGINEER
2010	2010	EMPLOYER: MUNICIPALITY OF MOUZAKI PROJECT: Environmental impact assessment of Wastewater treatment plant of Drakotripa POSITION: ENVIRONMENTAL STUDY ENGINEER
2010	2010	EMPLOYER: MUNICIPALITY OF EVRIMENES PROJECT: Environmental impact assessment of Wastewater treatment plant of Stomio POSITION: ENVIRONMENTAL STUDY ENGINEER

03/12/18

2010	2010	EMPLOYER: MINISTRY OF CULTURE PROJECT: Environmental impact assessment of Messara's Archaeological Museum POSITION: ENVIRONMENTAL STUDY ENGINEER
2009	2009	EMPLOYER: MUNICIPALITY OF MESOLOURI PROJECT: Environmental impact assessment of Wastewater treatment plant of Mesolouri POSITION: ENVIRONMENTAL STUDY ENGINEER
2008	2008	EMPLOYER: MUNICIPALITY OF LARISSA PROJECT: Environmental impact assessment of "Karagiorga" road POSITION: ENVIRONMENTAL STUDY ENGINEER
2007	2007	EMPLOYER: MINISTRY OF CULTURE PROJECT: Environmental impact assessment of Byzantine – Christian Museum POSITION: ENVIRONMENTAL STUDY ENGINEER
2007	2007	EMPLOYER: MUNICIPALITY OF LARISSA PROJECT: Environmental impact assessment of "Karditsis" road POSITION: ENVIRONMENTAL STUDY ENGINEER
2006	2006	EMPLOYER: MUNICIPALITY OF MAKRYCHORI PROJECT: Environmental impact assessment of Kypselochori-Makrychori road POSITION: ENVIRONMENTAL STUDY ENGINEER
2006	2006	EMPLOYER: MUNICIPALITY OF POLYDAMANDAS PROJECT: Environmental impact assessment of Water borehole at Palaiomylos POSITION: ENVIRONMENTAL STUDY ENGINEER

09/12/18

Na osnovu Zakona o osiguranju Republike Crne Gore i Statuta Društva, na sjednici Odbora direktora „UNIQA neživotno osiguranje" a.d. Podgorica, održanoj dana 01.11.2013. godine, donijet je sljedeći akt poslovne politike:

AKCIONARSKO DRUŠTVO ZA OSIGURANJE
UNIQA
NEŽIVOTNO OSIGURANJE
I. Br. ODXIa-4/1
01. 11. 2013. god.
PODGORICA, Bul. Sv. Petra Cetinjskog 1A/IV

POSEBNI USLOVI ZA OSIGURANJE OBJEKATA U IZGRADNJI PROTIV SVIH RIZIKA (CAR)

GEORGIOS KARKANIAS
PRESIDENT

3/12/13

POSEBNI USLOVI ZA OSIGURANJE OBJEKATA U IZGRADNJI PROTIV SVIH RIZIKA

Ovi posebni uslovi se primjenjuju na osiguranja za koja je osiguranik dao osiguravaču pismenu ponudu popunivši Upitnik koji se, zajedno sa svim ostalim pismenim aktima dostavljenim osiguravaču koje je sačinio osiguranik, smatra sastavnim dijelom polise osiguranja.

Osiguravač se obavezuju da isplati osiguraniku naknadu iz osiguranja na način i u obimu koji je ugovoren, pod uslovom da je osiguranik platio osiguravaču premiju osiguranja navedenu u polisi i pod uslovima, rokovima, isključenjima i odredbama ovih Posebnih uslova.

Opšta isključenja

Osiguravač nije u obavezi da isplati naknadu iz osiguranja osiguraniku za štetu ili odgovornost koji su neposredno ili posredno prouzrokovani, proističu ili su pogoršani:

a) ratom, invazijom, djelovanjem stranog neprijatelja, neprijateljstvima (bilo da je rat zvanično objavljen ili ne), građanskim ratom, pobunom, revolucijom, ustankom, bunom, neredima, štrajkom, demonstracijama, prisilnim zatvaranjem fabrika i radnih mjesta, građanskim nemirima, vojnom ili uzurpiranom vlašću, grupom zlonamjernih osoba ili osoba koje djeluju u ime ili u vezi sa bilo kojom političkom organizacijom, zavjerom, konfiskacijom, nasilnim preuzimanjem, rekvizicijom ili uništenjem ili štetom načinjenom po naređenju bilo koje Vlade de iure ili de facto ili bilo koje javne vlasti;
b) nuklearnom reakcijom, nuklearnom radijacijom ili radioaktivnom kontaminacijom;
c) voljnim činjenjem ili voljnim propuštanjem činjenja od strane osiguranika ili lica koja ga zastupaju;
d) potpunom ili djelimičnom obustavom rada

U bilo kakvoj parnici ili drugom postupku u kojima Osiguravač tvrdi da, prema odredbama gore navedenog isključenja pod a), bilo kakav gubitak, uništenje, oštećenje ili odgovornost nijesu pokriveni ovim osiguranjem teret dokazivanja da su takav gubitak, uništenje, oštećenje ili odgovornost pokriveni je na osiguraniku.

Period pokrića

Obaveza osiguravača počinje, bez obzira na bilo koji datum koji bi bio suprotan datumu navedenom u polisi osiguranja, odmah po započinjanju radova ili nakon istovara predmeta osiguranja, navedenih u polisi, na mjesto izvođenja radova. Obaveze osiguravača prestaju za djelove osiguranih radova koji su preuzeti ili stavljeni u upotrebu.

Osiguranje ističe najkasnije na datum naveden u polisi. Bilo kakvo produženje perioda osiguranja je moguće samo uz prethodnu pismenu saglasnost osiguravača.

GEORGIOS KARKANIAS
PRESIDENT

3/12/18

Opšti uslovi

1. Poštovanje i ispunjenje ovih Posebnih uslova, ukoliko se oni odnose na bilo šta što osiguranik treba da učini, ili u skladu sa čim treba da postupi i istinitost iskaza i odgovora u upitniku i ponudi, datoj od strane osiguranika, su preduslov za bilo kakvu odgovornost osiguravača.
2. Obrazac tabelarnog priloga uz polisu (schedule) i Odjeljci će se smatrati sastavnim dijelom ovih Posebnih uslova, a izraz „Posebni uslovi" kad god se koristi u ovom ugovoru podrazumijevaće ujedno Obrazac tabelarnog priloga polise (Schedule) i Odjeljke. Bilo koja riječ ili izraz kojima je pripisano posebno značenje u bilo kom dijelu ovih Posebnih uslova ili Obrasca tabelarnog priloga uz polisu (schedule) ili Odeljaka nosiće takvo značenje gdje god se pojave.
3. Osiguranik će o sopstvenom trošku preduzeti sve razumne preventivne mjere i postupiće u skladu sa svim razumnim preporukama osiguravača u cilju sprečavanja štete ili odgovornosti i poštovati sve zakonske uslove i preporuke proizvođača.
4. a) Predstavnici osiguravača imaju pravo da, u bilo koje razumno vrijeme, izvrše pregled i ispitaju rizik, a osiguranik je obavezan da predstavnicima osiguravača dostavi sve detalje i informacije neophodne za procjenu rizika.
   b) Osiguranik je obavezan da odmah obavijesti osiguravače telegramom i u pisanoj formi o bilo kakvoj promjeni rizika i da preduzme, o svom trošku, sve dodatne mjere obezbjeđenja, prema datim okolnostima, s tim što će obim pokrića i premija, po potrebi, biti usklađeni.

Osiguranik ne može vršiti bilo kakve materijalne izmjene, niti priznanja, kojima se rizik povećava, dok osiguravači pismeno ne potvrde nastavak osiguranja u tom slučaju.

5. U slučaju bilo kakvog događaja koji bi mogao da dovede do zahtjeva po osnovu ove Polise, osiguranik je obavezan da:

a) odmah obavijesti osiguravača telefonom ili telegramom, kao i u pisanoj formi, navodeći prirodu i obim štete;
b) preduzme sve mjere koje su u njegovoj moći kako bi smanjio obim štete;
c) sačuva oštećene djelove i učini ih dostupnim za pregled predstavnicima osiguravača ili procjeniteljima;
d) dostavi sve informacije ili pismene dokaze koje osiguravač zahtijeva;
e) obavijesti policiju u slučaju štete koja je posljedica krađe ili provalne krađe.

6. Osiguravači nijesu odgovorni za štetu za koju nijesu primili nikakvo obavještenje od osiguranika u roku od 14 dana od dana nastanka osiguranog slučaja. Nakon obavještavanja osiguravača, osiguranik može da izvrši popravke ili zamjene kod manjih oštećenja; u svim drugim slučajevima predstavniku osiguravača biće omogućeno da pregleda oštećenja prije bilo kakvih popravki ili izmjena. Ako predstavnik osiguravača ne izvrši pregled u roku koji se može smatrati odgovarajućim prema okolnostima slučaja, tada osiguranik ima pravo da vrši popravke i zamjene. Obaveze osiguravača, po ovim Posebnim uslovima, u pogledu bilo kakve stvari koja je pretrpjela štetu prestaju ukoliko oštećena stvar nije valjano popravljena bez odlaganja.
   Osiguranik će, o trošku osiguravača, učiniti, saglasiti se činjenjem ili dozvoliti činjenje akata i radnji koje su neophodne ili koje zahtijeva osiguravač u cilju ostvarenja prava, upotrebe pravnog sredstva, dobijanja olakšica ili ostvarenja naknade od drugih lica (osim onih koja su osigurana po osnovu polise izdate po ovim Posebnim uslovima) na koje je osiguravač ovlašćen ili u pogledu kojih ima pravo regresa, a po isplati naknade ili popravci za bilo koju štetu po polisi izdatoj po ovim Posebnim uslovima, bez obzira da li su takvi akti i radnje postale neophodne ili ih osiguravač zahtijeva prije ili poslije isplate naknade osiguraniku.

7. U slučaju neslaganja u pogledu iznosa koji treba isplatiti po osnovu polise izdate po ovim Posebnim uslovima (pri čemu je utvrđen osnov) za takve sporove će biti nadležan Arbitar koga će imenovati, u pisanoj formi, strane u sporu, a ako se strane ne slože oko imenovanja jednog Arbitra, tada će biti nadležna dva Arbitra, od kojih će svaka od strana pismeno imenovati jednog u roku od jednog kalendarskog mjeseca po zahtjevu neke od strana, ili, u slučaju da se Arbitri ne slože, nadležan će biti Predsjedavajući arbitraže koga će imenovati Arbitri prije upuštanja u postupak. Predsjedavajući arbitar će zasijedati sa Arbitrima i predsjedavati njihovim sastancima. Donošenje odluke od strane arbitara će biti preduslov za podnošenje tužbe protiv osiguravača.

8. Ukoliko je zahtjev u bilo kom pogledu prevaran, ili sadrži ili je potkrijepljen bilo kakvim lažnim iskazom, ili ukoliko se osiguranik ili bilo ko drugi ko postupa za njegov račun posluži bilo kakvim neistinitim sredstvima ili postupcima u cilju ostvarivanja koristi po polisi izdatoj po ovim Posebnim uslovima, ili ako potraživanje bude odbijeno, a nikakav postupak ili parnica ne bude pokrenuta u roku od tri mjeseca po odbijanju, ili u

GEORGIOS KARKANIAS
PRESIDENT

3/12/19

slučaju arbitraže, kao što je predviđeno, u roku od tri mjeseca nakon što Arbitar ili Arbitri ili Predsjedavajući arbitar donesu odluku, prestaje svako pravo na naknadu po osnovu polise izdate na osnovu ovih Posebnih uslova.

9. Ukoliko u vrijeme podnošenja zahtjeva po polisi izdatoj po ovim Posebnim uslovima postoji drugo osiguranje koje pokriva istu štetu ili odgovornost, osiguravač neće biti u obavezi da plati više od srazmjernog dijela u odnosu na takvu štetu ili odgovornost.

Odjeljak I – Materijalna šteta

Ukoliko u bilo kom trenutku tokom perioda pokrića predmeti-stavke ili bilo koji njihov dio koji su navedeni u tabelarnom prilogu polise (Schedule) izdate po ovim Posebnim uslovima pretrpe bilo kakav nepredviđeni ili iznenadni fizički gubitak ili oštećenje iz bilo kog razloga, izuzev onih koji su posebno isključeni, na način koji iziskuje popravku ili zamjenu, osiguravač je obavezan da isplati osiguraniku naknadu za takvu štetu bilo plaćanjem u gotovini, zamjenom ili popravkom (prema sopstvenom izboru) do iznosa koji, za svaku od stavki navedenih u tabelarnom prilogu polise (schedule) izdate po ovim Posebnim uslovima, ne prelazi sumu koja stoji pored tih stavki i koja ni u jednom slučaju ne prelazi limit odgovornosti tamo gdje je on primjenljiv i koja ne prelazi, u ukupnom zbiru, ukupnu sumu osiguranja navedenu u tabelarnom prilogu polise (schedule).

Osiguravač će takođe osiguraniku nadoknaditi troškove uklanjanja ostataka (raščišćavanja ruševina) nakon svakog događaja koji mu daje pravo na zahtev po ovoj polisi pod uslovom da je posebna suma ugovorena i upisana u tabelarni prilog polise izdate po ovim Posebnim uslovima.

Posebna isključenja po Odjeljku I

Osiguravač ni u kom slučaju nije u obavezi da naknadi:

a) Iznos franšize naveden u tabelarnom prilogu polise izdate po ovim Posebnim uslovima koji osiguranik snosi po svakom štetnom događaju;

b) posljedične štete bilo koje vrste uključujući ugovorne kazne, štete nastale usljed kašnjenja, neizvršenja obaveze, raskida ugovora;

c) štete zbog greške u projektu;

d) troškove zamjene, popravke ili ispravke neispravnog materijala i/ili radova, s tim što je ovo isključenje ograničeno na stavke neposredno pogođene i neće se smatrati isključenim štete na ispravno izvršenim pozicijama koje su oštećene usljed neispravnih materijala i radova;

e) habanje, koroziju, oksidaciju, pogoršavanje usljed nekorišćenja i normalnih atmosferskih uslova;

f) mehaničke i/ili električne kvarove ili neispravnosti građevinske opreme, opreme i građevinske mehanizacije;

g) štete prouzrokovane vozilima za javni saobraćaj, plovnim sredstvima ili letjelicama;

h) gubitak ili štetu nastalu na dokumentima, crtežima, računima, mjenicama, novcu, markama, spisima, evidentiranju dugova, komercijalnim zapisima, hartijama od vrijednosti, čekovima;

i) štete otkrivene tek u vrijeme pravljenja popisa (inventara).

Odredbe koje se primjenjuju na Odjeljak I

Memo 1 – Osigurane sume: Sume osiguranja navedene u tabelarnom prilogu polise – schedule izdate po ovim Posebnim uslovima ne smiju biti manje od:

za stavku 1: pune vrijednosti ugovorenih radova u vrijeme završetka izgradnje, uključujući sve materijale, zarade, vozarinu, carinske troškove, dažbine i materijale koje isporučuje naručilac;

GEORGIOS KARKANIAS
PRESIDENT

3/12/18

za stavke 2 i 3: novonabavnu vrijednost građevinske opreme, opreme i mehanizacije za izvođenje radova, što znači troškove zamjene osiguranih stavki novima iste vrijednosti i kapaciteta,

a osiguranik je obavezan da uveća ili smanji sume osiguranja u slučaju bilo kakvih materijalnih promjena u nivou plata ili cijena, uvijek pod uslovom da takvo uvećanje ili smanjenje stupa na snagu tek pošto ga osiguravač unese u polisu.

Ako, u slučaju štete, bude ustanovljeno da su sume osiguranja manje od iznosa na koji osiguranje treba da bude zaključeno, onda će se iznos naknade iz osiguranja koji osiguranik može da naplati po osnovu polise izdate po ovim Posebnim uslovima umanjiti srazmjerno odnosu osigurane sume prema sumi osiguranja na koju je osiguranje trebalo da bude izvršeno. Svaki predmet i trošak podliježe ovom uslovu zasebno.

Memo 2 – Osnovi za likvidaciju štete: u slučaju bilo kakve štete, osnov za likdivaciju štete po ovoj polisi će biti:

a) u slučaju štete koja se može popraviti - troškovi popravke potrebni da se predmeti vrate u stanje neposredno prije nastanka štete umanjeno za vrijednost spašenog, ili

b) u slučaju totalne štete – stvarna vrijednost predmeta neposredno prije gubitka umanjeno za vrijednost spašenog;

ali samo u obimu u kome je zahtijevane troškove morao da snosi osiguranik i u obimu u kome su isti obuhvaćeni sumama osiguranja i uvijek pod uslovom da su poštovane ugovorene odredbe i ovi Posebni uslovi.

Osiguravač će izvršiti isplatu tek nakon dostavljanja potrebnih računa i dokumenata koji potvrđuju da su popravke izvršene ili da je izvršena zamjena, prema okolnostima slučaja. Svaka šteta koja se može popraviti biće popravljena, ali ako su troškovi popravke bilo koje štete jednaki ili veći od vrijednosti predmeta neposredno prije nastanka štete, šteta će biti likvidirana kao što je navedeno gore pod b).

Troškove bilo kakvih privremenih popravki snosiće osiguravači ako takve popravke čine dio konačnih popravki i ne uvećavaju ukupne troškove popravki.

Troškovi bilo kakvih izmjena, dodataka i/ili poboljšanja nijesu pokriveni polisom koja se izdaje po ovim Posebnim uslovima.

Odjeljak II – Odgovornost za štete pričinjene trećim licima

Osiguravači će isplatiti osiguraniku naknadu do iznosa, ali ne preko iznosa navedenog u tabelarnom prilogu polise (schedule) po ovim Posebnim uslovima za sume koje osiguranik bude po zakonu obavezan da plati za štete koje su posljedica

a) slučajne tjelesne povrede ili bolesti trećih lica (bilo smrtne ili ne)
b) slučajne štete na imovini koja pripada trećim licima,

a koje se dese u neposrednoj vezi sa izgradnjom ili montažom stavki osiguranih po osnovu Odjeljka I polise izdate po ovim Posebnim uslovima ili u neposrednoj blizini mjesta izvođenja radova tokom perioda osiguranja.

Pored zahtjeva za naknadu na koji se navedeno osiguranje odnosi, osiguravač će osiguraniku naknaditi i:
a) sve troškove parničnog postupka koje oštećeni naplati od osiguranika i
b) sve troškove sa kojima su se osiguravači pismeno saglasili,
uvijek pod uslovom da obaveze osiguravača po osnovu ovog odjeljka ne prelaze limit odgovornosti naveden u Tabelarnom prilogu polise (schedule).

Posebna isključenja po Odjeljku II

Osiguravač nije obavezan da osiguraniku plati naknadu za:

1. iznos franšize naveden u tabelarnom prilogu polise (schedule) izdate po ovim Posebnim uslovima koji snosi osiguranik po svakom osiguranom slučaju;

2. troškove nastale prilikom činjenja, ponovnog činjenja, popravke ili zamjene bilo čega što je pokriveno ili se može pokriti po osnovu Odjeljka I ovih Posebnih uslova;

GEORGIOS KARKANIAS
PRESIDENT

3/12/18

3. štete na imovini, zemljištu ili objektima prouzrokovane vibracijama, uklanjanjem ili slabljenjem potpora, kao i štete usljed tjelesnih povreda lica ili oštećenja imovine koje su se desile ili proizilaze iz ovakvih šteta (izuzev ukoliko nije posebno ugovoreno odgovarajućim prilogom)

4. odgovornosti koja je posljedica:
   a) tjelesne povrede ili bolesti zaposlenih ili radnika izvođača radova, naručioca ili neke druge firme koja je u vezi sa projektom koja je ili čiji je dio osiguran po osnovu Odjeljka I, kao i članova njihovih porodica;
   b) štete na imovini koja pripada ili je u državini, pod nadzorom, staranjem ili kontrolom izvođača radova, naručioca ili neke druge firme koja je povezana sa radovima koja je ili čiji je dio osiguran po osnovu Odjeljka I, kao i zaposlenih ili radnika bilo koga od gore pomenutih;
   c) bilo kakve nezgode prouzrokovane vozilima za javni saobraćaj, plovnim sredstvima ili letjelicama;
   d) bilo kakvog sporazuma osiguranika o plaćanju bilo kakve sume u vidu naknade ili nekom drugom vidu, izuzev ukoliko bi to bila obaveza i u odsustvu takvog sporazuma.

Posebni uslovi koji se primjenjuju na Odjeljak II

1. Osiguranik ne može dati ili učiniti nikakvo priznanje, ponudu, obećanje, plaćanje ili naknadu bez pismene saglasnosti osiguravača koji ima pravo da, ukoliko to želi, preuzme i vodi u ime osiguranika odbranu ili rješavanje bilo kakvog zahtjeva ili da sudski potražuje za svoj račun i u ime osiguranika bilo kakvu naknadu ili odštetu i ima puna ovlašćenja u vođenju bilo kakvih sudskih postupaka ili u rješavanju bilo kakvog zahtjeva, a osiguranik je obavezan da obezbijedi sve informacije i pruži pomoć koju osiguravač zahtijeva.

2. Osiguravač može da u pogledu bilo kakve nezgode plati osiguraniku sumu označenu kao limiti odgovornosti po osiguranom slučaju (umanjeno za bilo koju sumu plaćenu kao naknada po tom osnovu) ili bilo kakvu manju sumu kojom se potraživanje ili potraživanja proistekla iz takvog osiguranog slučaja mogu riješiti, nakon čega osiguravač nema nikakvu dalju obavezu po pogledu tog osiguranog slučaja po ovom Odjeljku.

Odjeljak III – Gubitak buduće dobiti naručioca

Osiguravač će isplatiti naknadu iz osiguranja osiguraniku koji je označen kao Naručilac u Tabelarnom prilogu polise izdate po ovim uslovima u pogledu gubitka bruto dobiti koju stvarno pretrpi usljed smanjenja u obimu poslovanja i povećanim troškovima rada, kako je definisano u ovom odjeljku, ako bilo kada u toku perioda osiguranja utvrđenom u Tabelarnom prilogu polise izdate po ovim uslovima osigurani radovi ili bilo koji njihov dio pretrpe štetu koja je pokrivena po Odjeljku 1 ovih uslova, izuzev ako je izričito isključena ovim odjeljkom, uzrokujući time uticaj na građevinske radove što ima posljedicu kašnjenje u započinjanju i/ili uticaj na osigurane poslove, (u daljem tekstu označeno kao kašnjenje).

Iznos koji se plaća po ovom osnovu na ime naknade iz osiguranja će biti:
- u pogledu bruto dobiti: suma koja se dobija primjenom stope bruto dobiti na iznos za koji je stvarni obim poslovanja umanjen, a koji bi se postigao da kašnjenje nije nastalo
- u pogledu povećanih troškova poslovanja: dodatni troškovi koji su neophodni i opravdani isključivo za svrhu izbjegavanja ili minimiziranja umanjenja u obimu poslovanja koji bi, bez takvih troškova, nastali za vrijeme perioda odgovornosti, ali koji ne prelaze sumu koja se dobija primjenom stope bruto dobiti na iznos smanjenja u obimu poslovanja koji se time izbjegava.

Ako je godišnja suma osiguranja manja nego suma koja se dobija primjenom stope bruto dobiti na godišnji obim poslovanja, tada će naknada iz osiguranja koja se plaća biti proporcionalno umanjena.

GEORGIOS KARKANIAS
PRESIDENT

3/12/18

Definicije

Period osiguranja

Period osiguranja je onaj period koji je naveden u Tabelarnom prilogu polise izdate po ovim uslovima i završava se na dan naveden u Tabelarnom prilogu polise ili bilo kada ranije ukoliko osiguranje za materijalne štete po Odeljku 1 ovih uslova prestane.

Planirani datum početka osiguranog posla

Datum naveden u Tabelarnom prilogu polise izdate po ovim uslovima ili naknadno izmijenjen datum kada je posao trebalo da počne da se nije desilo kašnjenje.

Period odgovornosti

Period u kome na rezultate poslovanja utiču posledice kašnjenja, koji počinje na utvrđeni datum početka osiguranog posla i koji ne prelazi maksimalni period naveden u Tabelarnom prilogu uz ovaj odjeljak.

Vremenska franšiza

Period naveden u Tabelarnom prilogu uz ovaj odjeljak za koji osiguravač nije odgovoran. Odgovarajući iznos će biti obračunat množenjem prosječne dnevne vrijednosti štete koja se trpi za vrijeme Perioda odgovornosti sa brojem dana koji su određeni kao vremenska franšiza.

Promet

Novčani iznos (umanjen za odobrene popuste) koji je plaćen ili plativ osiguraniku za najam prostora ili druge usluge pružene tokom obavljanja osiguranog posla u poslovnim prostorijama.

Godišnji promet

Promet koji bi, da do odlaganja nije došlo, bio postignut u toku 12 mjeseci od planiranog dana otpočinjanja osiguranog posla.

Godišnja bruto dobit

Iznos za koji vrijednost godišnjeg prometa premašuje iznos specificiranih troškova poslovanja.

Specificirani troškovi poslovanja su bilo koji varijabilni troškovi, npr. troškovi u vezi kupovine roba, materijala kao i troškovi za nabavke i usluge (izuzev ako su potrebni za održavanje poslovanja) i bilo koji troškovi na ime poreza na promet, poreza na nabavku, licenci, naknada i sl. u mjeri u kojoj su takvi troškovi zavisni od prometa.

Stopa bruto dobiti

Stopa koja bi, da se nije desilo kašnjenje, bila ostvarena na promet ostvaren u periodu odgovornosti.

Posebna isključenja po Odjeljku 3

Osiguravač nije odgovoran za:

1. Gubitak bruto dobiti i /ili povećane troškove poslovanja zbog bilo kakvog kašnjenja uzrokovanog ili nastalog usljed:

1.1. štete pokrivene po Odjeljku 1 putem priloga (endorsmenta) ukoliko to nije posebno ugovoreno u pismenoj formi,
1.2. zemljotresa, vulkanske erupcije, cunamija, ukoliko to nije posebno ugovoreno u pismenoj formi,
1.3. štete na okolnoj imovini, opremi i mehanizaciji za izvođenje radova,
1.4. štete na potrošnim sredstvima i sirovinama, manjka, uništenja, pogoršanja na bilo kojim materijalima neophodnim za osigurani posao,
1.5. bilo kakvih zabrana koje nametnu javne vlasti,
1.6. nedostupnosti fondova,

GEORGIOS KARKANIAS
PRESIDENT

3/12/18

1.7. izmjena, dodataka, poboljšavanja, ispravki, oštećenja ili grešaka ili uklanjanja nedostataka nastalih poslije štetnog događaja,
1.8. štete na predmetima preuzetim ili stavljenim u upotrebu od strane osiguranika za koje je pokriće po Odeljku 1 polise izdate po ovim uslovima prestalo;

2. bilo koje štete usljed ugovornih kazni ili naknada za povredu ugovora, kašnjenje ili neizvršenje porudžbina, ili za kazne bilo koje vrste;

3. gubitka posla usljed razloga kao što su obustava, istek ili otkaz zakupa, licence ili porudžbine i dr. koji se desi poslije dana stvarnog početka posla;

4. šteta na građevinskim radovima koji imaju prirodu prototipa, ukoliko nije posebno ugovoreno putem priloga;

Odredbe koje se primjenjuju na Odjeljak 3

Memo 1 – Produženje perioda

Bilo koje produženje perioda osiguranja po Odjeljku 1 ovih uslova ne vodi automatski produženju perioda osiguranja navedenom u Tabelarnom prilogu uz ovaj odjeljak.

Bilo koje produženje perioda osiguranja po ovom Odjeljku osiguranik mora tražiti čim je u mogućnosti, navodeći okolnosti koje su dovele do potrebe za produženjem, a takvo produženje će imati djejstvo na ovaj odjeljak samo ako je posebno ugovoreno u pismenoj formi.

Bilo koja izmjena ugovorenog datuma otpočinjanja osiguranog posla će biti prijavljena u pismenoj formi i imaće djejstvo na ovaj Odjeljak samo ako je posebno ugovorena u pismenoj formi.

Memo 2 – Osnove za likvidaciju šteta

Pri obračunu stope bruto dobiti i godišnjeg prometa, sljedeće stavke će posebno biti uzete u obzir:

a) rezultati osiguranog posla u periodu od 12 mjeseci poslije otpočinjanja;

b) izmjene ili posebne okolnosti koje bi imale uticaja na osigurani posao da se kašnjenje nije desilo;

c) izmjene i posebne okolnosti od uticaja na osigurani posao nakon otpočinjanja;

tako da konačni iznosi predstavljaju, što je bliže moguće, razumno ostvarive rezultate koji bi bili postignuti obavljanjem osiguranog posla posle ugovorenog datuma da se kašnjenje nije desilo

Memo 3 – Povraćaj premije

Ako osiguranik dokaže (uz potvrdu osiguranikovog revizora) da je bruto dobit za vrijeme obračunskog perioda od 12 mjeseci poslije početka osiguranog posla ili datuma na koji je trebalo, ali zbog kašnjenja osigurani posao nije otpočeo, bila manja od sume na koju je izvršeno osiguranje, tada će biti izvršen povraćaj premija pro-rata, najviše do iznosa trećine plaćene premije, na ime takve razlike.

U slučaju nastanka štete po osnovu koje osiguranik ima pravo na zahtjev po osnovu ovih uslova, povraćaj će biti izvršen samo za onaj dio gore navedene razlike koji se ne duguje po osnovu takve štete.

Posebni uslovi koji se primjenjuju na Odjeljak 3

1. Osiguranik je obavezan da osiguravaču dostavi ažurirane izvještaje u periodima navedenim u Tabelarnom prilogu uz ovaj odjeljak.
2. U slučaju bilo kakve izmjene u originalnom riziku kao što su:
   - izmjene u utvrđenom dinamičkom planu,
   - izmjene, modifikacije ili dodaci bilo kojoj stavci radova,
   - napuštanje propisanih građevinskih metoda,
   - izmjene u osiguranikovom poslovanju (kao što je prekid u poslovanju, likvidacija ili prinudna uprava),

GEORGIOS KARKANIAS
PRESIDENT

3/12/18

polisa izdata po ovim uslovima će se smatrati raskinutom dok njen nastavak ne bude pismeno potvrđen od strane osiguravača

3. U slučaju bilo kog događaja koji može uzrokovati kašnjenje i dati osnov za zahtjev po ovom odjeljku:

   a) osiguranik je obavezan da odmah obavijesti osiguravača telefonom ili telegramom i da pismeno potvrdi obavještenje u roku od 48 sati od događaja;
   b) osiguranik će preduzeti i dozvoliti da se preduzmu sve aktivnosti koje su razumno ostvarive u cilju smanjenja ili ustanovljenja obima uticaja na građevinske radove i u cilju sprečavanja ili minimiziranja kašnjenja koje usljed toga nastane;
   c) osiguravač i bilo koje lice koje ovlasti osiguravač će, bez obaveza prema bilo kojoj strani osiguranoj ovim uslovima, imati pristup mjestu izvođenja radova gdje se dogodila šteta u cilju direktnih pregovora sa odgovornim izvođačem ili podizvođačem radi ustanovljenja mogućih uzroka i obima štete, njenih uticaja na osigurane rizike, ispitivanja mogućnosti za smanjenja kašnjenja planiranog početka osiguranog posla i, ako je neophodno, radi davanja razumnih preporuka za izbjegavanje ili smanjenje takvog kašnjenja.

   Ovaj uslov će biti dokaz o saglasnosti i ovlašćenje osiguranika da osiguravač može to učiniti. Ako osiguranik ili drugo lice koje djeluje u njegovo ime sprečava ili otežava osiguravača za vrijeme gore navedenih aktivnosti ili ne ispunjava takve preporuke osiguravača, osiguranik će izgubiti sva prava po ovom odjeljku.

4. U slučaju zahtjeva po ovom Odjeljku, osiguranik će o svom trošku dostaviti osiguravaču najkasnije u roku od 30 dana od kašnjenja, ili u toku naknadnog perioda ukoliko ga osiguravač odobri u pismenoj formi, pismenu izjavu navodeći detalje svog zahtjeva. Pored toga, osiguranik će o svom trošku obezbijediti i dostaviti osiguravaču knjigovodstvene dokumente i poslovne knjige npr. račune, bilanse i druge dokumente, dokaze, informacije, objašnjenja ili druge dokaze koje osiguravač ima pravo da zahtijeva u razumnoj mjeri u cilju istraživanja i provjeravanja zahtjeva zajedno sa, ako osiguravač to traži, ovjerenom izjavom o istinitosti zahtjeva i stvari povezanih sa zahtjevom.

5. Naknada iz osiguranja dospijeva za naplatu mjesec dana po konačnom utvrđivanju iznosa naknade. Bez obzira na gore navedeno osiguranik može, mjesec dana nakon što je osiguravač na propisan način obaviješten i pošto je priznao odgovornost, zahtijevati na ime avansa isplatu iznosa koji je plativ na osnovu nesumnjivih okolnosti.

   Osiguravač je ovlašćen da odloži isplatu naknade iz osiguranja

   a) ako postoji sumnja u pravo osiguranika da primi naknadu, dok se neophodni dokazi ne dostave
   b) ako, kao rezultat štete ili kašnjenja planiranog početka osiguranog posla policija ili istražni organi pokrenu istragu, do okončanja takve istrage

Osiguravač nije obavezan da plati kamatu ili naknadu za neisplaćeni iznos osim zatezne kamate

Opšte odredbe

Sastavni dio ovih Posebnih uslova su i dolje navedeni Prilozi, kojima se u zavisnosti od vrste radova, načina izvođenja, prirodnih ili bilo kojih drugih okolnosti i uslova (koji se odnose ili utiču na izvođenje radova), vrše dopune, proširenja, suženja, isključenja ili druge izmjene ovih Posebnih uslova.

GEORGIOS KARKANIAS
PRESIDENT

3/19219 8

Prilozi:

001	Pokriće za štete prouzrokovane štrajkovima, pobunama i građanskim nemirima
002	Pokriće za uzajamnu odgovornost
003	Osnovno pokriće u periodu održavanja
004	Prošireno pokriće u periodu održavanja
005	Posebni uslovi za dinamički plan izgradnje i/ili montaže
006	Pokriće za dodatne troškove za prekomjerni rad, noćni rad, rad u dane državnih praznika i ekspresni prevoz
007	Pokriće za dodatne troškove avionskog prevoza
008	Pokriće za građevine u zonama zemljotresa
009	Isključenje pokrića za štetu ili odgovornost usljed zemljotresa
010	Isključenje pokrića za štetu ili odgovornost usljed poplave i izlivanja
012	Isključenje pokrića za štetu ili odgovornost usljed oluje ili šteta prouzrokovanih vodom usljed oluje
013	Imovina u skladištima van mjesta izvođenja radova
014	Isključenje pokrića za štetu ili odgovornost usljed terorizma
100	Pokriće za testiranje mašina i instalacija
101	Posebni uslovi za izgradnju tunela, galerija, privremenih ili trajnih podzemnih građevina ili instalacija
102	Posebni uslovi za podzemne kablove, cijevi i druge instalacije
103	Isključenje pokrića za štete na usjevima, šumama i kulturama
104	Posebni uslovi za izgradnju brana i rezervoara za vodu
106	Pokriće za dionice
107	Pokriće za kampove i skladišta
108	Pokriće za građevinsku opremu i mehanizaciju
109	Pokriće za građevinski materijal
110	Posebni uslovi u pogledu bezbjednosnih mjera koje se odnose na padavine, poplave i izlivanje
111	Posebni uslovi za uklanjanje ruševina sa klizišta
112	Posebni uslovi u pogledu protivpožarnih uređaja i protivpožarnih mjera na gradilištima
113	Kopneni transport
114	Serijske štete
115	Pokriće za rizik projektovanja
116	Pokriće za osigurane ugovorene radove koji su preuzeti ili stavljeni u upotrebu
117	Posebni uslovi za postavljanje vodovoda i kanalizacije
118	Bušenje za izvorišta vode
119	Postojeća imovina ili imovina koja pripada ili je u državini, pod nadzorom ili kontrolom osiguranika
120	Vibracije, uklanjanje ili slabljenje potpora, oslonca ili nosećih konstrukcija
121	Posebni uslovi za pobijanje šipova i radove na potpornim zidovima
200	Rat i Terorizam
201	Isključenje rizika radioaktivne kontaminacije, hemijskog, biološkog, biohemijskog i elektromagnetnog oružja
202	Elektronski podaci
203	Isključenje političkih rizika, finansijskih garancija i kreditnih rizika
204	Industrije,curenje, zagađenje i kontaminacija
205	Isključenje rizika od azbesta
206	Isključenje odgovornosti za rizik od ograničenog neispravnog stanja (DE 3)
207	Isključenje rizika od unapređenja projekta (DE 5)
208	Rizici u vezi sa vodom
209	72 časa
210	Podjela 50/50
211	Automatsko ponovno pokriće do sume osiguranja
212	Planovi i dokumenta
213	Profesionalne naknade
214	Državni organi
215	Privremene popravke

GEORGIOS KARKANIAS
PRESIDENT

3/12/18

216	Uklanjanje ostataka
217	Minimizacija štete
218	Ograničenje i isključivanje sankcija
219	Klauzula o eskalaciji

GEORGIOS KARKANIAS
PRESIDENT

3/12/18

Tabelarni prilog polise (schedule)

Naziv i adresa osiguranika	**Naziv ugovora** **Mjesto izvođenja radova**

Odjeljak I – Materijalna šteta		
Predmet osiguranja	**Suma osiguranja**	**Franšiza**
1. Ugovoreni radovi (trajni i privremeni radovi uključujući sve materijale koji treba da budu ugrađeni) 1.1 Ugovorena cijena 1.2 Materijali i predmeti koje isporučuje naručilac 2. Oprema i mehanizacija za izvođenje radova 3. Uklanjanje ruševina		

Ukupna suma osiguranja po Odjeljku I	

Rizik	**Limit odgovornosti ***	**Franšize**
Zemljotres, vulkanska erupcija, cunami Oluja, uragan, poplava, izlivanje, klizanje tla		

*** Limit odgovornosti po svakoj pojedinačnoj šteti ili seriji šteta koje proističu iz jednog osiguranog slučaja**

GEORGIOS KARKANIAS
PRESIDENT

3/12/18

Odjeljak II – Odgovornost za štete pričinjene trećim licima		
Predmet osiguranja	**Limit odgovornosti ****	**Franšize**
1. Tjelesne povrede		
1.1 po jednom licu		
1.2 ukupno		
2. Imovinske štete		

** **Limit odgovornosti po jednom slučaju ili seriji slučajeva koji proističu iz jednog događaja**

Odjeljak III – Gubitak buduće dobiti naručioca		
Osigurani interes	**Godišnja osigurana suma**	**Suma osiguranja za maksimalni period naknade**
Ukupan profit i povećane cijene rada		

Period osiguranja		Maksimalni period naknade		Vremenska franšiza	Rok za prijavu
Od	Do***		Od****		
		mjeseci			mjeseci

*** **Planirani datum završetka gradnje**

**** **Planirani datum početka osiguranog posla, koji ne može biti prije planiranog datuma završetka gradnje**

Period osiguranja
(prema odredbama koje se odnose na period pokrića)

Od **do** **uključujući** **sedmica testiranja**

Upitnik i ponuda br. _____ čine sastavni dio ove polise
Sljedeći prilozi su dodati i čine sastavni dio ove polise:

Ukupna premija (uključujući dodatne premije po gore navedenim prilozima)	**ZA OSIGURAVAČA**
	Dana _____

GEORGIOS KARKANIAS
PRESIDENT

13

3/12/18

Prilog 001 – Pokriće za štete prouzrokovane štrajkovima, pobunama i građanskim nemirima

Ugovoreno je i podrazumijeva se da će, nasuprot rokovima, isključenjima, odredbama i uslovima sadržanim u polisi ili prilozima uz polisu i pod uslovom da je osiguranik platio ugovorenu dodatnu premiju osiguranje biti prošireno tako da pokriva štetu nastalu usljed štrajka, pobune i građanskih nemira, što će za potrebe ovog priloga značiti (uvijek pod Posebnim uslovima koji su navedeni u daljem tekstu) gubitak ili oštećenje osigurane imovine koji su neposredno prouzrokovani:

1. radnjama lica koje učestvuje sa drugim licima u bilo kakvom remećenju javnog mira (bilo u vezi sa štrajkom ili prisilnim zatvaranjem poslovnog prostora ili ne) koje ne spadaju pod uslov 2 dolje navedenih Posebnih uslova,
2. djelovanjem zakonski konstituisane vlasti prilikom suzbijanja ili pokušaja suzbijanja takvog ometanja ili prilikom ublažavanja posljedica takvog ometanja,
3. voljnim činom nekog štrajkača ili radnika zatvorenog u poslovnom prostoru sa ciljem nastavljanja štrajka ili pružanja otpora prisilnom zatvaranju poslovnog prostora od strane poslodavca,
4. djelovanjem zakonski konstituisane vlasti prilikom sprečavanja ili pokušaja sprečavanja nekog takvog čina ili prilikom ublažavanja posljedica nekog takvog čina.

S tim što je izričito ugovoreno i potvrđuje se da:

1. svi rokovi, isključenja, odredbe i uslovi ove Polise važe u svakom pogledu za osiguranje izdato ovim proširenjem, osim ukoliko isti nisu izričito izmijenjeni sljedećim Posebnim uslovima, a svako pominjanje gubitka ili štete u tekstu ove Polise podrazumijevaće opasnosti koje su ovim osigurane,
2. Sljedeći Posebni uslovi važiće samo za osiguranje izdato ovim proširenjem, a tekst polise odnosiće se u svakom pogledu na osiguranje dato polisom kao da ovaj Prilog nije dodat.

Posebni uslovi

1 Ovo osiguranje ne pokriva:

a) štetu nastalu kao posljedica potpune ili djelimične obustave rada ili ometanja, prekida ili obustave nekog procesa ili aktivnosti,
b) štetu prouzrokovanu trajnim ili privremenim oduzimanjem imovine koje je posljedica konfiskacije, plenidbe ili rekvizicije od strane zakonski konstituisane vlasti,
c) štetu prouzrokovanu trajnim ili privremenim oduzimanjem bilo kog objekta koje je posljedica nezakonitog zauzimanja tog objekta od strane nekog lica,
d) posljedičnu štetu ili odgovornost bilo koje vrste, bilo kakvu isplatu koja premašuje ovdje ugovorenu naknadu za materijalnu štetu koje se ovim pokriva

s tim što osiguravač nije oslobođen odgovornosti, po gore navedenim tačkama b) i c), prema osiguraniku u pogledu fizičkog oštećenja osigurane imovine koje se dogodilo prije oduzimanja ili tokom privremenog oduzimanja imovine.

GEORGIOS KARKANIAS PRESIDENT

3/12/18

2 Ovo osiguranje ne pokriva štete koje su prouzrokovane ili su nastale kao posljedica, neposredno ili posredno, nekog od sljedećih događaja, i to:

a) rata, invazije, djelovanja stranog neprijatelja, neprijateljstva ili ratne operacije (bilo da je rat zvanično objavljen ili ne), građanskog rata,

b) bune, građanskih nemira koji se šire ili dostižu razmjere narodnog ustanka, vojnog ustanka, ustanka, pobune, revolucije, vojne ili uzurpirane vlasti,

c) bilo kakvog čina lica koje djeluje u korist ili u vezi sa nekom organizacijom čije su djelatnosti usmjerene ka nasilnom zbacivanju vlade de jure ili de facto ili ka vršenju uticaja na vladu putem terorizma ili nasilja.

U bilo kom sporu, sudskom ili nekom drugom postupku u kome osiguravač tvrdi da obzirom na odredbe ovih uslova šteta nije pokrivena osiguranjem, teret dokazivanja da je takva šteta pokrivena snosi osiguranik.

3 Osiguravač može u bilo kom trenutku raskinuti ovo osiguranje obavijestivši u tom smislu osiguranika preporučenom poštanskom pošiljkom poslatom na posljednju poznatu adresu osiguranika, u kom slučaju je osiguravač obavezan da izvrši povraćaj srazmernog dijela premije za period od datuma raskida do isteka perioda osiguranja.

4 Podrazumijeva se da je limit odgovornosti po bilo kom osiguranom slučaju kao što je dolje navedeno ograničen na naknadu za štete pokrivene ovim Prilogom tokom neprekidnog perioda od 168 sati.

Ukupni limit odgovornosti osiguravača tokom perioda osiguranja po osim uslovima je ograničen na dvostruki iznos limita odgovornosti po jednom osiguranom slučaju.

Limit odgovornosti:	**po jednom osiguranom slučaju**
Franšiza:	**po jednom osiguranom slučaju**
Dodatna premija:	

GEORGIOS KARKANIAS
PRESIDENT

3/12/18

Prilog 002 – Pokriće za uzajamnu odgovornost

Ugovoreno je i podrazumijeva se da će, nasuprot rokovima, isključenjima, odredbama i uslovima sadržanim u polisi ili prilozima uz polisu i pod uslovom da je osiguranik platio ugovorenu dodatnu premiju, pokriće za odgovornost za štete pričinjene trećim licima po polisi osiguranja biti primijenjeno na osiguranike navedene u tabelarnom prilogu polise (schedule) kao da je posebna polisa izdata za svakog osiguranika, s tim što osiguravač nije o obavezi da osiguraniku isplati naknadu po ovom Prilogu u pogledu odgovornosti za

- štete na stavkama koje su osigurane ili su se mogle osigurati po Odjeljku I Posebnih uslova za osiguranje objekata u izgradnji protiv svih rizika, čak i ako nijesu plativi zbog prekoračenja limita,

- smrti, povrede ili bolesti zaposlenih ili radnika koji su osigurani ili su mogli biti osigurani po osnovu osiguranja zaposlenih od posljedica nesrećnog slučaja ili po osnovu osiguranja od odgovornosti poslodavca.

Ukupna obaveza osiguravača prema osiguranim stranama ne može premašiti u ukupnom iznosu, po jednoj nezgodi, za više nezgoda ili serije nezgoda proisteklih iz jednog događaja limit odgovornosti naveden u tabelarnom prilogu polise (schedule).

Dodatna premija:

GEORGIOS KARKANIAS
PRESIDENT

3/12/18

Prilog 003 – Osnovno pokriće u periodu održavanja

Ugovoreno je i podrazumijeva se da će, nasuprot rokovima, isključenjima, odredbama i uslovima sadržanim u polisi ili prilozima uz polisu i pod uslovom da je osiguranik platio ugovorenu dodatnu premiju osiguranje biti produženo na period održavanja koji je posebno naveden tako da će pokrivati isključivo štete na ugovorenim radovima koje prouzrokuje osigurani izvođač tokom vršenja radnji u cilju ispunjavanja obaveza po osnovu ugovornih odredbi koje se odnose na održavanje.

Pokriće u periodu održavanja od **do**

Dodatna premija

GEORGIOS KARKANIAS
PRESIDENT

3+92/98

Prilog 004 – Prošireno pokriće u periodu održavanja

Ugovoreno je i podrazumijeva se da će, nasuprot rokovima, isključenjima, odredbama i uslovima sadržanim u polisi ili prilozima uz polisu i pod uslovom da je osiguranik platio ugovorenu dodatnu premiju osiguranje biti produženo na period održavanja koji je posebno naveden tako da će pokrivati štete na ugovorenim radovima:

- koje prouzrokuje osigurani izvođač radova tokom vršenja radnji u cilju ispunjavanja obaveza po osnovu ugovornih odredbi koje se odnose na održavanje.
- nastale za vrijeme perioda održavanja pod uslovom da su takve štete prouzrokovane na mjestu izvođenja radova tokom perioda izgradnje prije izdavanja potvrde o završetku radova za uništeni ili oštećeni dio radova.

Pokriće u periodu održavanja od do

Dodatna premija

GEORGIOS KARKANIAS
PRESIDENT

3/12/18

Prilog 005 – Posebni uslovi za dinamički plan izgradnje i/ili montaže

Ugovoreno je i podrazumijeva se da će, nasuprot rokovima, isključenjima, odredbama i uslovima sadržanim u polisi ili prilozima uz polisu, sljedeće odredbe biti primijenjene na osiguranje:

Dinamički plan izgradnje i/ili montaže, zajedno sa drugim pismenim izjavama osiguranika datim u svrhu dobijanja pokrića po ovim uslovima, kao i tehničkim podacima koje je dostavio osiguravaču, smatra se sastavnim dijelom polise osiguranja.

Osiguravač nije obavezan da osiguraniku plati naknadu iz osiguranja za štete prouzrokovane, proistekle ili pogoršane usljed odstupanja od dinamičkog plana izgradnje i/ili montaže koji premašuje ugovoreni broj sedmica odstupanja, ukoliko se osiguravači nijesu pismeno saglasili sa takvim odstupanjem prije nastanka štete.

Odstupanje od dinamičkog plana: **sedmica**

GEORGIOS KARKANIAS
PRESIDENT

3112178

Prilog 006 – Pokriće za dodatne troškove za prekovremeni rad, noćni rad, rad u dane državnih praznika i ekspresni prevoz

Ugovoreno je i podrazumijeva se da će, nasuprot rokovima, isključenjima, odredbama i uslovima sadržanim u polisi ili prilozima uz polisu i pod uslovom da je osiguranik platio ugovorenu dodatnu premiju osiguranje biti prošireno tako da pokriva dodatne troškove za prekovremeni rad, noćni rad, rad u dane državnih praznika i ekspresni prevoz (isključujući avionski prevoz), uvijek pod uslovom da su takvi dodatni troškovi nastali u vezi sa nekom štetom na osiguranim stavkama pokrivenim polisom osiguranja.

Ako je osigurana suma oštećenog predmeta manja od iznosa na koji je trebalo izvršiti osiguranje, tada će naknada plativa po ovom prilogu za takve dodatne troškove biti umanjena u istoj srazmjeri.

Limit odgovornosti: **po jednom osiguranom slučaju**

Dodatna premija:

GEORGIOS KARKANIAS
PRESIDENT

3/12/18

Prilog 007 – Pokriće za dodatne troškove avionskog prevoza

Ugovoreno je i podrazumijeva se da će, nasuprot rokovima, isključenjima, odredbama i uslovima sadržanim u polisi ili prilozima uz polisu i pod uslovom da je osiguranik platio ugovorenu dodatnu premiju osiguranje biti prošireno tako da pokriva dodatne troškove za avionski prevoz,–uvijek pod uslovom da su takvi dodatni troškovi nastali u vezi sa nekom štetom na osiguranim stavkama pokrivenim polisom osiguranja, kao i pod uslovom da naknada plativa po ovom prilogu neće premašiti iznos od _____, tokom perioda osiguranja.

Franžiza: 20% od iznosa plativih dodatnih troškova, minimum po jednom osiguranom slučaju

Maksimalni iznos naknade:

Dodatna premija:

GEORGIOS KARKANTAS
PRESIDENT

3/12/18

Prilog 008 – Pokriće za građevine u zonama zemljotresa

Ugovoreno je i podrazumijeva se da će, nasuprot rokovima, isključenjima, odredbama i uslovima sadržanim u polisi ili prilozima uz polisu, osiguravač biti u obavezi da isplati osiguraniku naknadu iz osiguranja samo za štetu ili odgovornost prouzrokovanu zemljotresom ukoliko osiguranik dokaže da je prilikom projektovanja uzeo u obzir rizik od zemljotresa prema zvaničnim građevinskim normativima koji važe za tu lokaciju i da se pridržavao kvaliteta materijala i izrade i dimenzija na osnovu kojih su načinjeni takvi proračuni.

GEORGIOS KARKANIAS
PRESIDENT

3/12/18

Prilog 009 – Isključenje pokrića za štetu ili odgovornost usljed zemljotresa

Ugovoreno je i podrazumijeva se da, nasuprot rokovima, isključenjima, odredbama i uslovima sadržanim u polisi ili prilozima uz polisu, osiguravač nije u obavezi da osiguraniku plati naknadu za štetu ili odgovornost neposredno ili posredno nastalu usljed zemljotresa.

GEORGIOS KARKANIAS
PRESIDENT

31/12/18

Prilog 010 – Isključenje pokrića za štetu ili odgovornost usljed poplave i izlivanja

Ugovoreno je i podrazumijeva se da, nasuprot rokovima, isključenjima, odredbama i uslovima sadržanim u polisi ili prilozima uz polisu, osiguravač nije u obavezi da osiguraniku plati naknadu za štetu ili odgovornost neposredno ili posredno nastalu usljed poplave ili izlivanja.

GEORGIOS KARKANIAS
PRESIDENT

3/12/18

Prilog 012 – Isključenje pokrića za štetu ili odgovornost usljed oluje ili šteta prouzrokovanih vodom usljed oluje

Ugovoreno je i podrazumijeva se da, nasuprot rokovima, isključenjima, odredbama i uslovima sadržanim u polisi ili prilozima uz polisu, osiguravač nije u obavezi da osiguraniku plati naknadu za štetu ili odgovornost neposredno ili posredno nastalu usljed oluje koja je jednaka ili premašuje 8 stepeni po Boforovoj skali (odnosno brzinu vjetra od 62 km/h) ili bilo koju štetu prouzrokovanu vodom koja se desila u vezi ili kao posljedica takve oluje.

GEORGIOS KARKANIAS
PRESIDENT

3/12/18

Prilog 013 – Imovina u skladištima van mjesta izvođenja radova

Ugovoreno je i podrazumijeva se da će, nasuprot rokovima, isključenjima, odredbama i uslovima sadržanim u polisi ili prilozima uz polisu i pod uslovom da je osiguranik platio ugovorenu dodatnu premiju osiguranje biti prošireno tako da pokriva štetu na osiguranoj imovini (osim na imovini koja je proizvedena, prerađena ili uskladištena u prostorijama proizvođača, distributera ili dobavljača) u skladištu izvan mjesta izgradnje unutar teritorijalnih granica kako je navedeno dolje.

Osiguravači nijesu obavezni da osiguraniku plate naknadu iz osiguranja za štetu do koje je došlo zbog neprimjenjivanja uobičajenih mjera za sprečavanje šteta u magacinima ili skladištima. Takve mjere posebno uključuju sljedeće:

- skladišni prostor obavezno mora biti ograđen (bilo u zgradi ili bar ogradom), čuvan, zaštićen od požara, u skladu sa odgovarajućom lokacijom i vrstom uskladištene imovine;
- djelovi skladišta moraju biti razdvojeni protivpožarnim zidovima ili na međusobnoj udaljenosti od najmanje 50 metara;
- djelovi skladišta moraju biti smješteni i izgrađeni na način kojim se sprečava šteta koja nastaje akumuliranjem vode ili poplavama prouzrokovanim kišom, koje se statistički ponavljaju u periodu kraćem od 20 godina;
- ograničavanje vrijednosti po skladišnoj jedinici.

Teritorijalne granice:

Maksimalna vrijednost po skladišnoj jedinici:

Limit odgovornosti (po jednom osiguranom slučaju):

Franšiza: **% od iznosa štete po jednom osiguranom slučaju**

Dodatna premija:

GEORGIOS KARKANIAS
PRESIDENT

3/12/18

Prilog 014 – Isključenje pokrića za štetu ili odgovornost usljed terorizma

Ugovoreno je i podrazumijeva se da, nasuprot rokovima, isključenjima, odredbama i uslovima sadržanim u polisi ili prilozima uz polisu, osiguravač nije u obavezi da osiguraniku plati naknadu za štetu ili odgovornost neposredno ili posredno nastalu usljed terorizma.

Teroristički akt, za potrebe ovog priloga, označava akt koji uključuje ali nije ograničen na upotrebu sile ili nasilja i/ili prijetnje, od strane bilo kog lica ili grupe(a) lica, bilo da ono djeluje samo ili u ime ili u vezi sa nekom(im) organizacijom(jama) ili vladom(dama), posvećenoj(im) političkim, religioznim, ideološkim ili etničkim ciljevima ili razlozima koji uključuju namjeru da se na neku vladu izvrši uticaj i/ili da se zastraši javnost ili bilo koji dio javnosti.

Ovaj prilog takođe isključuje štete ili troškove bilo koje prirode koji su neposredno i posredno prouzrokovani ili su nastali kao posljedica bilo koje radnje sprovedene u cilju kontrole, sprečavanja i suzbijanja terorizma ili na bilo koji način povezane sa nekim terorističkim činom.

Prilikom bilo kog spora, sudskog ili nekog drugog postupka u kome osiguravači tvrde da prema odredbama ovog priloga neki gubitak, razaranje, šteta ili odgovornost nijesu pokriveni ovim osiguranjem teret dokazivanja da je takav gubitak, razaranje, šteta ili odgovornost pokrivena osiguranjem snosi osiguranik.

GEORGIOS KARKANIAS
PRESIDENT

3/7/2018

Prilog 100 – Pokriće za testiranje mašina i instalacija

Ugovoreno je i podrazumijeva se da će, nasuprot rokovima, isključenjima, odredbama i uslovima sadržanim u polisi ili prilozima uz polisu i pod uslovom da je osiguranik platio ugovorenu dodatnu premiju osiguranje biti produženo na period testiranja ili testiranja opterećenja, ali ne duže od četiri nedjelje od datuma početka testiranja.

Ako se, međutim, dio nekog postrojenja ili jedna (ili nekoliko) mašina provjerava(ju) i/ili stavlja(ju) u pogon ili preuzima(ju), pokriće za taj određeni dio postrojenja ili mašine(a) i svaka obaveza koja odatle proističe će prestati dok će se pokriće nastaviti za preostale djelove na koje se gore navedeno ne odnosi.

Ugovoreno je i podrazumijeva se da će za mašine i instalacije koji su podvrgnuti provjeri, isključenja c) i d) iz Isključenja uz Odjeljak 1 ovih posebnih uslova biti izbrisana, a važiće sljedeće iskijučenje:

„gubitak ili štetu usljed greške u projektu, greške u materijalu ili odlivku, loše izrade osim grešaka u izgradnji:"

U slučaju polovnih predmeta, ovo osiguranje će, međutim, prestati odmah po započinjanju testiranja.

GEORGIOS KARKANIAS
PRESIDENT

3/12/18

Prilog 101 – Posebni uslovi za izgradnju tunela, galerija, privremenih ili trajnih podzemnih građevina ili instalacija

Ugovoreno je i podrazumijeva se da, nasuprot rokovima, isključenjima, odredbama i uslovima sadržanim u polisi ili prilozima uz polisu, osiguravač nije u obavezi da osiguraniku isplati naknadu iz osiguranja za troškove nastale zbog:

- izmjena u metodi izgradnje ili usljed nepredviđenih uslova terena ili prepreka,
- mjera koje postanu neophodne radi poboljšanja ili stabilizacije tla ili zaptivanja protiv prodiranja vode, ukoliko nijesu neophodne radi vraćanja u prvobitno stanje za štete za koje postoji obaveza naknade,
- uklanjanja iskopanog materijala, ili materijala van projektovanih profila i/ili radi ispunjavanja udubljenja koja odatle proisteknu,
- odvodnjavanja ukoliko nije neophodno da bi se popravila šteta za koju postoji obaveza naknade,
- štete usljed kvara na sistemu za odvodnjavanje ako se takva šteta mogla izbjeći upotrebom rezervnih uređaja,
- napuštanja ili vraćanja u prvobitno stanje mašina za bušenje tunela,
- štete na bentonitu, suspenziji ili bilo kakvom sredstvu ili supstanci koja se koristi kao potpora prilikom iskopavanja ili kao agens za stabilizovanje tla.

U slučaju štete, za koju postoji obaveza naknade, maksimalan iznos za isplatu će biti ograničen na troškove nastale zbog vraćanja osigurane imovine u standard ili stanje koje je tehnički jednako onome koje je postojalo neposredno prije nastupanja štete, ali koji ne prelazi procenat, kako je navedeno dolje, prvobitnih prosječnih troškova izgradnje po metru u neposredno oštećenom dijelu.

Maksimalni procenat koji se plaća: ___%

GEORGIOS KARKANIAS
PRESIDENT

29

3/12/18

Prilog 102 – Posebni uslovi za podzemne kablove, cijevi i druge instalacije

Ugovoreno je i podrazumijeva se da je, nasuprot rokovima, isključenjima, odredbama i uslovima sadržanim u polisi ili prilozima uz polisu, osiguravač u obavezi da osiguraniku isplati naknadu iz osiguranja za štete na postojećim podzemnim kablovima, cijevima i drugim podzemnim instalacijama samo ako je osiguranik, prije početka radova, ispitao sa nadležnim vlastima tačan položaj ovih kablova, cijevi i drugih podzemnih instalacija i ako je preduzeo sve neophodne mjere za izbjegavanje štete na istim.

Zahtjevi u pogledu šteta na takvim podzemnim instalacijama koje imaju isti položaj kao što je prikazano na mapama podzemnih instalacija (crtežima koji pokazuju položaj podzemnih instalacija) su plativi po odbitku franšize u visini od _____ od iznosa štete ili franšize dolje navedene pod a), koja god je veća.

Zahtjevi u pogledu šteta na takvim podzemnim instalacijama koje su netačno prikazane na mapama podzemnih instalacija su plativi po odbitku franšize dolje navedene pod b).

Naknada iz osiguranja je u svakom slučaju ograničena na troškove popravljanja takvih kablova, cijevi ili drugih podzemnih instalacija, a bilo kakva posljedična šteta i kazne isključeni su iz ovog pokrića.

Franšize: **a) _____ od iznosa štete, minimum _____ po jednom slučaju**

b)

GEORGIOS KARKANIAS
PRESIDENT

3/12/18

Prilog 103 – Isključenje pokrića za štete na usjevima, šumama i kulturama

Ugovoreno je i podrazumijeva se da, nasuprot rokovima, isključenjima, odredbama i uslovima sadržanim u polisi ili prilozima uz polisu, osiguravač nije u obavezi da osiguraniku plati naknadu za štetu ili odgovornost neposredno ili posredno prouzrokovanu usjevima, šumama i/ili bilo kakvim kulturama za vrijeme izvršenja ugovorenih radova.

GEORGIOS KARKANIAS
PRESIDENT

3/12/18

Prilog 104 – Posebni uslovi za izgradnju brana i rezervoara za vodu

Ugovoreno je i podrazumijeva se da, nasuprot rokovima, isključenjima, odredbama i uslovima sadržanim u polisi ili prilozima uz polisu, osiguravač nije u obavezi da osiguraniku isplati naknadu iz osiguranja u pogledu:

- zalivanja područja sa mekim stijenama cementom i/ili drugih dodatnih sigurnosnih mjera, čak i ako potreba za njima nastane tek tokom izgradnje,
- troškova nastalih za odvodnjavanje, čak i ako su prvobitno očekivane količine vode znatno premašene,
- šteta zbog kvara na sistemu za odvodnjavanje ako se takav kvar mogao izbjeći dovoljnim rezervnim uređajima obezbijeđenim na licu mjesta,
- troškova nastalih za dodatno zaptivanje ili zaštitu od vode i dodatna postrojenja za izbacivanje tekućih ili podzemnih voda,
- šteta usljed slijeganja tla ukoliko su prouzrokovane nedovoljnim sabijanjem,
- pukotina i curenja.

GEORGIOS KARKANIAS
PRESIDENT

3/12/18

Prilog 106 – Pokriće za dionice

Ugovoreno je i podrazumijeva se da će, nasuprot rokovima, isključenjima, odredbama i uslovima sadržanim u polisi ili prilozima uz polisu, osiguravač biti u obavezi da isplati osiguraniku naknadu iz osiguranja samo za štetu ili odgovornost neposredno ili posredno prouzrokovanu nasipima, usjecima i zasjecima, jarkovima, kanalima ili radovima na putu ako su ovi nasipi, usjeci, zasjeci, jarkovi, kanali ili radovi na putu građeni po dionicama koje u ukupnoj dužini ne prelaze dužinu navedenu dolje, bez obzira na stanje dovršenosti osiguranih radova, a nadoknada po jednom osiguranom slučaju biće ograničena na troškove popravki takvih dionica.

Maksimalna dužina dionice: **metara**

GEORGIOS KARKANIAS
PRESIDENT

33

31/12/18

Prilog 107 – Pokriće za kampove i skladišta

Ugovoreno je i podrazumijeva se da će, nasuprot rokovima, isključenjima, odredbama i uslovima sadržanim u polisi ili prilozima uz polisu, osiguravač biti u obavezi da isplati osiguraniku naknadu iz osiguranja samo za štetu ili odgovornost neposredno ili posredno prouzrokovanu kampovima i skladištima požarom, poplavom ili izlivanjem ako su ovi kampovi i skladišta smješteni iznad najvišeg nivoa vode evidentiranog bilo gdje na mjestu izgradnje tokom posljednjih 20 godina i ako su posebne skladišne jedinice ili udaljene jedna od druge najmanje 50 metara ili razdvojene protivpožarnim zidovima.

Takođe je ugovoreno da je osiguravač u obavezi da osiguraniku plati naknadu iz osiguranja po jednom slučaju samo do limita odgovornosti od

za kampove

za svaku posebnu skladišnu jedinicu.

GEORGIOS KARKANIAS
PRESIDENT

3/12/18

Prilog 108 – Pokriće za građevinsku opremu i mehanizaciju

Ugovoreno je i podrazumijeva se da će, nasuprot rokovima, isključenjima, odredbama i uslovima sadržanim u polisi ili prilozima uz polisu, osiguravač biti u obavezi da isplati osiguraniku naknadu iz osiguranja samo za štetu ili odgovornost neposredno ili posredno prouzrokovanu na građevinskoj-opremi i mehanizaciji poplavom ili izlivanjem ako se, nakon izvođenja radova ili u slučaju bilo kakvog prekida radova, takva oprema i mehanizacija drže na mjestu koje nije bilo plavljeno u periodu od 20 godina.

GEORGIOS KARKANIAS
PRESIDENT

3/12/18

Prilog 109 – Pokriće za građevinski materijal

Ugovoreno je i podrazumijeva se da će, nasuprot rokovima, isključenjima, odredbama i uslovima sadržanim u polisi ili prilozima uz polisu, osiguravač biti u obavezi da isplati osiguraniku naknadu iz osiguranja samo za štetu ili odgovornost neposredno ili posredno prouzrokovanu na građevinskom materijalu poplavom ili izlivanjem ako takav građevinski materijal ne prelazi trodnevne potrebe, a višak materijala se čuva na mjestu koje nije bilo plavljeno u periodu od 20 godina.

GEORGIOS KARKANIAS
PRESIDENT

3/12/18

Prilog 110 – Posebni uslovi u pogledu bezbjednosnih mjera koje se odnose na padavine, poplave i izlivanje

Ugovoreno je i podrazumijeva se da će, nasuprot rokovima, isključenjima, odredbama i uslovima sadržanim u polisi ili prilozima uz polisu, osiguravač biti u obavezi da isplati osiguraniku naknadu iz osiguranja samo za štetu ili odgovornost neposredno ili posredno prouzrokovanu padavinama, poplavom ili izlivanjem samo ako su preduzete odgovarajuće sigurnosne mjere u projektovanju i izvođenju datog projekta.

Odgovarajuće sigurnosne mjere, za svrhu ovog priloga, značiće da je za padavine, poplave i izlivanje, u svakom trenutku tokom perioda osiguranja, uračunata mogućnost njihovog pojavljivanja obzirom na prethodni period od 20 godina za osiguranu lokaciju na osnovu statističkih podataka pripremljenih od strane meteoroloških službi.

Šteta ili odgovornost koji su nastali kao posljedica neblagovremenog uklanjanja prepreka (npr. pijesak, drveće) od strane osiguranika iz vodenih tokova u okviru mjesta izgradnje, bilo da u njima ima vode ili ne, radi održavanja slobodnog protoka vode, nijesu pokrivene.

GEORGIOS KARKANIAS
PRESIDENT

37

3/12/18

Prilog 111 – Posebni uslovi za uklanjanje ruševina sa klizišta

Ugovoreno je i podrazumijeva se da, nasuprot rokovima, isključenjima, odredbama i uslovima sadržanim u polisi ili prilozima uz polisu, osiguravač nije u obavezi da osiguraniku isplati naknadu iz osiguranja za:

- troškove nastale zbog uklanjanja ruševina sa klizišta koji prelaze troškove iskopavanja prvobitnog materijala sa područja pogođenog takvim klizištima

- troškove nastale zbog popravljanja erodiranih padina ili drugih nagnutih područja, ako je osiguranik propustio da preduzme potrebne mjere, ili ih nije preduzeo na vrijeme.

GEORGIOS KARKANIAS
PRESIDENT

3/12/18

Prilog 112 – Posebni uslovi u pogledu protivpožarnih uređaja i protivpožarnih mjera na gradilištima

Ugovoreno je i podrazumijeva se da će, nasuprot rokovima, isključenjima, odredbama i uslovima sadržanim u polisi ili prilozima uz polisu, osiguravač biti u obavezi da isplati osiguraniku naknadu iz osiguranja samo za štetu ili odgovornost neposredno ili posredno prouzrokovanu požarom ili eksplozijom, uvijek pod uslovom

1. Da je, obzirom na tok radova, u svakom trenutku dostupna i u funkciji odgovarajuća protivpožarna oprema i dovoljno sredstava za gašenje požara.
   Da su instalirani ispravni hidranti do nivoa ispod najvišeg trenutnog nivoa radova i da su zaptiveni privremenim poklopcima.
2. Da se kasete sa crijevima i prenosivim aparatima za gašenje požara provjeravaju u redovnim intervalima, a najmanje dvaput nedjeljno.
3. Da su prostorije sa protivpožarnim uređajima prema zahtjevima lokalnih pravila instalirane što prije nakon uklanjanja oplate.
   Da su otvori za šahtove liftova, kanali za rad i druge šupljine privremeno zatvoreni što prije, ali ne kasnije od početka opremanja.
4. Da se otpadni materijal uklanja redovno. Da su svi spratovi koji se opremaju očišćeni od zapaljivog materijala na kraju svakog radnog dana.
5. Da se sistem „dozvole za rad" primenjuje na sve izvođače koji su angažovani u „radovima na toplo" bilo koje vrste kao što su, (ali bez ograničenja na)
   - brušenje, sječenje i zavarivanje
   - korišćenje let-lampi i otvorenog plamena
   - primjena toplog bitumena,

   i bilo kojih drugih radova pri kojima se stvara toplota.
   „Rad na toplo" vrši se samo u prisustvu najmanje jednog radnika opremljenog aparatom za gašenje požara i obučenim za gašenje požara.
   Mjesto na kome se obavljaju radovi mora se pregledati jedan sat nakon završetka radova.
6. Da materijal za izgradnju ili montažu bude uskladišten po skladišnim jedinicama koje ne prelaze dolje navedenu vrijednost po jednoj jedinici. Pojedinačne skladišne jedinice moraju biti ili najmanje 50 metara udaljene jedna od druge ili odvojene protivpožarnim zidovima.
   Da svi zapaljivi materijali, a naročito sve zapaljive tečnosti i gasovi budu uskladišteni na dovoljno velikoj udaljenosti od imovine koja se gradi ili montira i od bilo kog rada na toplo.
7. Da je određen koordinator mjera bezbjednosti na gradilištu.
   Da je instaliran ispravan protipožarni sistem za uzbunjivanje i kad god je to moguće neposredna veza sa najbližom vatrogasnom jedinicom.
   Da se plan za protivpožarnu zaštitu i plan za postupanje prilikom požara primjenjuje i ažurira redovno.
   Da su zaposleni Osiguranika obučeni za protivpožarnu zaštitu i da se protivpožarne vježbe praktikuju nedeljno.
   Najbliža vatrogasna jedinica je upoznata sa gradilištem i obezijedjen je direktan dvadesetčetvoročasovni pristup
8. Gradilište je ograđeno i pristup je kontrolisan.

Vrijednost po skladišnoj jedinici:

GEORGIOS KARKANIAS
PRESIDENT

3/12/18

Prilog 113 – Kopneni transport

Ugovoreno je i podrazumijeva se da će, nasuprot rokovima, isključenjima, odredbama i uslovima sadržanim u polisi ili prilozima uz polisu i pod uslovom da je osiguranik platio ugovorenu dodatnu premiju, Odjeljak I ovih posebnih uslova biti proširen tako da pokriva štete nastale na osiguranoj imovini dok je u transportu do ugovorenog mjesta izgradnje, osim vodenim putem ili vazduhom, u okviru teritorijalnih granica s tim što maksimalni iznos na koji osiguranik ima pravo po ovom prilogu ne prelazi iznos od _____ po transportu.

Ukupna vrijednost imovine:

Franšiza:

Dodatna premija:

GEORGIOS KARKANIAS
PRESIDENT

31/12/18

Prilog 114 – Serijske štete

Ugovoreno je i podrazumijeva se da će, nasuprot rokovima, isključenjima, odredbama i uslovima sadržanim u polisi ili prilozima uz polisu sljedeća odredba biti primijenjena na osiguranje:

Štete nastale usljed greške u projektu (ukoliko je ovo pokriće uključeno posebnim prilogom), materijalu i/ili izradi koje potiču iz istog uzroka, a nastale su na građevinama, djelovima građevina, mehanizaciji ili opremi i iste su vrste, biće nadoknađene prema sljedećoj skali nakon primjene franšize za svaku štetu:

100% od iznosa prve dvije štete
80% od iznosa treće štete
60% od iznosa četvrte štete
50% od iznosa pete štete.

Dalje štete neće biti plative.

GEORGIOS KARKANTAS
PRESIDENT

31/12/18

Prilog 115 – Pokriće za rizik projektovanja

Ugovoreno je i podrazumijeva se da će, nasuprot rokovima, isključenjima, odredbama i uslovima sadržanim u polisi ili prilozima uz polisu i pod uslovom da je osiguranik platio ugovorenu dodatnu premiju isključenje pod c) u Posebnim isključenjima uz Odjeljak 1 biti izbrisano, a isključenje pod d) biti zamijenjeno sljedećim tekstom:

„d) Troškove zamjene, popravke ili ispravke štete na predmetima usljed greške u materijalu i/ili izradi i/ili greške u projektu, ali ovo isključenje će biti ograničeno na predmete koji su neposredno pogođeni i smatraće se da ono ne isključuje gubitak ili štetu na ispravno izvedenim predmetima koji su nastali zbog štete izazvane takvim lošim materijalom i/ili izradom i/ili greškom u projektu."

Dodatna premija:

GEORGIOS KARKANIAS
PRESIDENT

3/12/18

Prilog 116 – Pokriće za osigurane ugovorene radove koji su preuzeti ili stavljeni u upotrebu

Ugovoreno je i podrazumijeva se da će, nasuprot rokovima, isključenjima, odredbama i uslovima sadržanim u polisi ili prilozima uz polisu i pod uslovom da je osiguranik platio ugovorenu dodatnu premiju osiguranje biti prošireno tako da pokriva.

- štetu na djelovima osiguranih ugovorenih radova koji su preuzeti ili stavljeni u upotrebu ako takva šteta proizlazi iz izgradnje predmeta osiguranih po osnovu Odjeljka 1 i nastupi tokom perioda osiguranja.

Dodatna premija:

GEORGIOS KARKANTAS
PRESIDENT

31/12/18

Prilog 117 – Posebni uslovi za postavljanje vodovoda i kanalizacije

Ugovoreno je i podrazumijeva se da će, nasuprot rokovima, isključenjima, odredbama i uslovima sadržanim u polisi ili prilozima uz polisu, osiguravač biti u obavezi da isplati osiguraniku naknadu iz osiguranja za štetu ili odgovornost prouzrokovanu plavljenjem ili muljem u cijevima, rovovima ili oknima samo do dolje navedene maksimalne dužine otvorenog rova, djelimično ili potpuno iskopane, po jednom osiguranom slučaju.

Osiguravač je u obavezi samo ako su:

1. cijevi, odmah nakon postavljanja, bile obezbijeđene zatrpavanjem da se ne mogu pomjeriti u slučaju plavljenja rova,
2. cijevi, odmah nakon postavljanja, bile zatvorene kako bi se spriječio prodor vode, mulja i sl.,
3. rovovi, na dionicama vodova koje su prošle provjeru, bili zatrpani odmah nakon završetka provjere pritiska.

Maksimalna dužina: **metara**

GEORGIOS KARKANIAS
PRESIDENT

3/12/18

Prilog 118 – Bušenje za izvorišta vode

Ugovoreno je i podrazumijeva se da će, nasuprot rokovima, isključenjima, odredbama i uslovima sadržanim u polisi ili prilozima uz polisu, pokriće za radove na bušenju izvorišta vode biti ograničeno štete prouzrokovane ili proistekle iz sljedećih rizika:

- zemljotresa, vulkanskih erupcija, cunamija,
- olujnih vjetrova, ciklona, poplava, izlivanja, klizišta,
- dizanja u vazduh i/ili stvaranjem kratera,
- požara/eksplozije,
- arterskih vodenih tokova,
- štete od mulja, koje se ne mogu oktloniti poznatim postupcima,
- obrušavanjem rupe uključujući rušenje podzide usl,ed nenormalnog pritiska ili bubrenjem škriljaca, koje se ne može spriječiti uobičajenim postupcima.

Naknada će biti obračunata na osnovu troškova (uključujući materijal) potrošenih za bušenje izvorišta do samog trenutka kada prva od gore navedenih opasnosti postane vidna, a izvorište mora da bude napušteno zbog neke osigurane opasnosti, s tim što će osiguranik snositi franšizu od 10% od iznosa štete, u minimalnom iznosu koji je dolje naveden po jednom slučaju.

Posebna isključenja

Osiguravač nije u obavezi da plati naknadu iz osiguranja za:

- štetu na bušotini i opremi za bušenje (za koju izvođač radova koji vrši bušenje može da zaključi posebno osiguranje),
- troškove završnih operacija svih vrsta,
- troškove vraćanja bunara u prvobitno stanje uključujući sve stimulativne radove (nagrizanje, lomljenje itd.)

Franšiza:

GEOBUDE KARKANTAS PRESIDENT

3192/18

Prilog 119 – Postojeća imovina ili imovina koja pripada ili je u državini, pod nadzorom ili kontrolom osiguranika

Ugovoreno je i podrazumijeva se da će, nasuprot rokovima, isključenjima, odredbama i uslovima sadržanim u polisi ili prilozima uz polisu i pod uslovom da je osiguranik platio ugovorenu dodatnu premiju, Odjeljak I ovih posebnih uslova biti proširen tako da pokriva štete nastale na postojećoj imovini ili imovini koja pripada ili je u državini, pod nadzorom ili kontrolom osiguranika koje su prouzrokovane ili nastale izgradnjom ili montažom na predmetima osiguranim po Odjeljku 1.

Osigurana imovina:

Suma osiguranja:

Osiguravač je u obavezi da osiguraniku plati naknadu iz osiguranja za štete na osiguranoj imovini pod uslovom da je prije početka izgradnje ona bila u dobrom stanju i da su preduzete sve potrebne sigurnosne mjere.

U pogledu šteta prouzrokovanih vibracijama ili uklanjanjem ili slabljenjem potpora, oslonaca ili nosećih konstrukcija, osiguravač je u obavezi da osiguraniku plati samo naknadu za štete koje su rezultat potpunog ili delimičnog rušenja osigurane imovine, a ne za površinske štete koje ne oštećuju stabilnost osigurane imovine niti ugrožavaju njene korisnike.

Osiguravač nije u obavezi da osiguraniku plati naknadu za

- štete koje su predvidive obzirom na vrstu građevinskih radova i način izvođenja;
- Troškove sprečavanja šteta ili smanjivanje rizika nastupanja šteta koje su postale neophodne tokom perioda osiguranja.

Franšiza:

Dodatna premija:

GEORGIOS KARKANIAS
PRESIDENT

3/12/18

Prilog 120 – Vibracije, uklanjanje ili slabljenje potpora, oslonaca ili nosećih konstrukcija

Ugovoreno je i podrazumijeva se da će, nasuprot rokovima, isključenjima, odredbama i uslovima sadržanim u polisi ili prilozima uz polisu i pod uslovom da je osiguranik platio ugovorenu dodatnu premiju, Odjeljak 2 ovih posebnih uslova biti proširen tako da pokriva odgovornost usljed šteta prouzrokovanih vibracijama, uklanjanjem ili slabljenjem potpora, oslonaca ili nosećih konstrukcija

Uvijek pod uslovom da je:

osiguravač u obavezi da osiguraniku plati naknadu iz osiguranja za štetu na bilo kakvoj imovini, zemljištu ili građevini samo ako takva šteta za posljedicu ima potpuno ili djelimično rušenje,

- osiguravač je u obavezi da osiguraniku plati naknadu iz osiguranja za štetu na bilo kakvoj imovini, zemljištu ili građevini samo ako je prije početka izgradnje bila u dobrom stanju i ako su preduzete neophodne mjere za sprečavanje šteta,

- ukoliko je osiguranik na odgovarajući zahtjev, prije početka izgradnje o svom trošku, pripremio izveštaj o stanju imovine, zemljišta ili građevine koja je ugrožena.

Osiguravač nije u obavezi da osiguraniku isplati naknadu iz osiguranja u pogledu odgovornosti za:

- štetu koja se mogla predvidjeti obzirom na vrstu građevinskih radova ili način izvođenja,
- površinske štete koja ne ugrožavaju stabilnost imovine, zemljišta ili građevina, niti ugrožavaju njihove korisnike,
- troškove sprečavanja šteta ili smanjivanje rizika nastupanja šteta koje su postale neophodne tokom perioda osiguranja.

Limit odgovornosti (po jednom osiguranom slučaju)

Ukupni limit odgovornosti

Franšiza:

Dodatna premija:

GEORGIOS KARKANIAS
PRESIDENT
3/12/18

Prilog 121 – Posebni uslovi za pobijanje šipova i radove na potpornim zidovima

Ugovoreno je i podrazumijeva se da, nasuprot rokovima, isključenjima, odredbama i uslovima sadržanim u polisi ili prilozima uz polisu, osiguravač nije u obavezi da osiguraniku isplati naknadu iz osiguranja za troškove nastale zbog

1. zamjene ili popravljanja šipova ili elemenata potpornih zidova
   b) koji su stavljeni na pogrešno mjesto, pogrešno postavljeni ili zaglavljeni tokom izgradnje,
   c) koji su izgubljeni, napušteni ili oštećeni tokom pobijanja ili vađenja, ili
   d) koji su blokirani zaglavljenom ili oštećenom opremom za pobijanje ili cijevnim oblogama;
2. popravljanja nepovezanih ili neprikačenih šipova;
3. popravljanja curenja ili prodora materijala bilo koje vrste;
4. ispunjavanja šupljina ili zbog zamjene izgubljenog bentonita;
5. toga što neki šipovi ili elementi fundiranja nijesu prošli test opterećenja ili na drugi način nijesu dostigli svoj projektovanu nosivost;
6. vraćanja profila i dimenzija u prvobitno stanje.

Ovaj Prilog se ne primjenjuje za štete prouzrokovane prirodnim opasnostima. Teret dokazivanja da je takva šteta pokrivena je na osiguraniku.

GEORGIOS KARKANIAS
PRESIDENT

3/12/18

Prilog 200- Rat i terorizam

Bez obzira na bilo koju odredbu koja je u suprotnosti u okviru ovog osiguranja ili bilo koje klauzule uz isto, dogovoreno je da ovo osiguranje isključuje gubitak, štetu, trošak ili rashod bilo koje prirode koji je direktno ili indirektno izazvan bilo kojim navedenim događajem ili koji nastane kao posljedica istog ili u vezi s istim bez obzira na drugi uzrok ili događaj koji doprinosi datom gubitku istovremeno ili bilo kojim drugim redosljedom:

1. rat, invazija, postupci stranih neprijatelja, neprijateljstva ili ratne operacije (bilo da je rat objavljen ili ne), građanski rat, pobuna, revolucija, ustanak, građanski nemiri koji dobijaju razmjer ustanka ili vode ka ustanku, vojnoj i drugoj uzurpaciji vlasti; ili

2. bilo koji čin terorizma.

U smislu ove klauzule, čin terorizma označava čin koji obuhvata, uključujući ali ne ograničavajući se na, korišćenje sile ili nasilja i/ili prijetnju istim, bilo kojem licu ili grupi(ama) lica, bilo da se postupa samostalno ili u ime bilo koje(ih) organizacije(a) ili vlade(a) ili u vezi s istima, koji je izvršen iz političkih, vjerskih, ideoloških ili sličnih razloga uključujući namjeru da se utiče na bilo koju vladu i/ili da se zastraši javnost ili dio javnosti.

Ova klauzula takođe isključuje gubitak, štetu, trošak ili rashod bilo koje prirode koji je direktno ili indirektno izazvan bilo kojim činom, ili koji je posljedica istog ili u vezi s istim, preduzetim radi kontrolisanja, prevencije, sprečavanja stavki navedenih pod (1) i/ili (2) iznad ili koji se na bilo koji način odnosi na iste.
Ako Osiguravač bude tvrdio da iz razloga ovog isključenja, bilo koji gubitak, šteta, trošak ili rashod nije pokriven ovim osiguranjem, teret dokazivanja suprotnog pada na Osiguranika.

U slučaju da bude utvrđeno da je bilo koji dio ovog odobrenja nevažeći ili neprimjenjiv, ostatak ostaje na punoj snazi i dejstvu.

Ratna municija

Ovim se napominje i potvrđuje da Opšta isključenja navedena iznad pod a) ne važe za gubitak ili štetu na Osiguranoj imovini koja proistekne ili bude prouzrokovana detonacijom ratne municije ili njenih dijelova ili u blizini Projektnog gradilišta pod uslovom da prisustvo takve municije nije posljedica ratnog stanja koje je u toku u vrijeme gubitka ili štete.

GEORGIOS KARKANIAS
PRESIDENT

3/12/18

Prilog 201 - Isključenje rizika radioaktivne kontaminacije, hemijskog, biološkog, biohemijskog i elektromagnetnog oružja

Ova klauzula je od najveće važnosti i ima prvenstvo nad svim navedenim u ovoj polisi što nije u skladu s njom.

1. Ovo osiguranje ni u kojem slučaju ne pokriva gubitak, oštećenje, odgovornost ili troškove koji su direktno ili indirektne prouzrokovani, ili čijem je nastanku doprinijelo, ili koji proizlaze iz:

1.1 jonizirajućeg radioaktivnog zračenja ili radioaktivne kontaminacije nuklearnim gorivom ili nuklearnim otpadom ili sagorijevanjem nuklearnog goriva;

1.2 radioaktivnim, toksičnim, eksplozivnim ili drugim opasnim ili kontaminirajućim svojstvima nuklearnih postrojenja, reaktora ili drugih nuklearnih sklopova ili njihovih nuklearnih sastavnih dijelova;

1.3 oružja ili uređaja za koje se koristi atomska ili nuklearna fisija i/ili fuzija ili neka druga slična reakcija ili radioaktivna sila ili supstanca;

1.4 radioaktivnih, toksičnih, eksplozivnih ili drugih opasnih ili kontaminirajućih svojstava bilo koje radioaktivne supstance. Isključenje iz ove tačke ne odnosi se na radioaktivne izotope, osim nuklearnog goriva, ako se ti izotopi pripremaju, prevoze, skladište ili koriste u komercijalne, poljoprivredne, medicinske, naučne ili druge slične miroljubive svrhe;

1.5 hemijskog, biološkog, biohemijskog ili elektromagnetskog oružja.

GEORGIOS KARKANIAS
PRESIDENT

3/12/18

Prilog 202-Elektronski podaci

1. Isključenje elektronskih podataka

Bez obzira na bilo koju suprotnu odredbu u okviru Polise ili bilo kojeg odobrenja uz nju, dogovoreno je i potvrđuje se sljedeće:

a) Ovom Polisom se ne osigurava gubitak, šteta, uništenje, deformacija, brisanje, kvarenje ili izmjena Elektronskih podataka zbog bilo kojeg uzroka (uključujući ali ne ograničavajući se na Kompjuterski virus) ili gubitak korišćenja, smanjenje funkcionalnosti, troškovi, rashodi bilo koje vrste koji iz toga proizađu, bez obzira na sve druge uzroke ili događaje koji doprinose datom gubitku istovremeno ili bilo kojim drugim redosljedom.
Elektronski podaci označavaju činjenice, koncepte i informacije koje su konvertovane u oblik koji se može koristiti za komunikaciju, tumačenje ili obradu elektronskom i opremom za elektromehaničku obradu podataka ili elektronski kontrolisanom opremom i obuhvata programe, softver i druga kodirana uputstva za obradu i rukovanje podacima ili upravljanje i rukovanje takvom opremom.
Kompjuterski virus znači skup koruptivnih, štetnih ili drugih neovlašćenih instrukcija ili kod koji obuhvata skup maliciozno unesenih neovlašćenih instrukcija ili kod, programski ili drugi, koji se širi kroz kompjuterski sistem ili mrežu bilo koje prirode. Kompjuterski virus obuhvata ali nije ograničen na „trojanske konje", „crve", i „vremenske ili logičke bombe".

b) Međutim, u slučaju da neka od opasnosti navedenih ispod nastane kao posljedica bilo koje od stavki navedenih u stavu (a) iznad, ova će Polisa, prema njenim uslovima i isključenjima, pokrivati fizičko oštećenje nastalo tokom perioda važenja Polise na imovini koja je osigurana ovom Polisom a koje je direktno izazvano tako navedenom opasnošću.

Navedene opasnosti: Požar, Eksplozija

2. Vrednovanje medija za obradu elektronskih podataka

Bez obzira na bilo koju suprotnu odredbu u okviru Polise ili bilo koje klauzule primijenjene uz nju, dogovoreno je i potvrđuje se sljedeće:

Ukoliko medij za obradu elektronskih podataka koji je osiguran ovom Polisom pretrpi fizički gubitak ili oštećenje osigurano ovom Polisom, onda će osnova za vrednovanje biti cijena popravke, zamjene ili vraćanja datog medija u stanje koje je postojalo neposredno prije takvog gubitka ili oštećenja, uključujući trošak reprodukovanja svih Elektronskih podataka koji su u njemu sadržani, pod uslovom da se dato sredstvo popravi, zamijeni ili vrati u dato stanje. Takvi troškovi reprodukovanja obuhvataju sve razumne i neophodne iznose, koji ne smiju prelaziti _____% osiguranog iznosa u pogledu sekcije 1 kako je navedeno u detaljima vezano za rizike uz originalnu polisu, a koje napravi Osiguranik pri ponovnoj izradi, prikupljanju i sastavljanju takvih Elektronskih podataka. Ako mediji ne budu popravljeni, zamjenjeni ili vraćeni u dato stanje osnova za vrednovanje je trošak praznog medija. Međutim, ovom Polisom se ne osigurava bilo koji iznos koji pripada vrijednosti takvih Elektronskih podataka za Osiguranika ili bilo koju drugu stranu, čak i ako se takvi Elektronski podaci ne mogu ponovo izraditi, prikupiti ili sastaviti.

GEORGIOS KARKANIAS

3/12/18

Prilog 203 - Isključenje političkih rizika, finansijskih garancija i kreditnih rizika

Ovo osiguranje isključuje svaku štetu ili odgovornost koja proističe iz sljedećeg:

1. Raskid ugovora zbog nepredviđenih okolnosti, uključujući ali bez ograničenja na sve oblike neizvršenja ugovornih obaveza, embarga na uvoz i/ili izvoz, nepotvrđivanja ugovora, transfera u različitoj valuti, izdavanja obveznica i garancija i obeštećenja u slučaju više sile.
2. Neisporučivanje ili kašnjenje u isporuci ili snabdijevanju bilo kojom robom osim kao direktna posljedica fizičkog oštećenja.
3. Bilo koji oblik finansijske garancije, obeštećenja za jemca za kredit.

GEORGIOS KARKANIAS
PRESIDENT

3/12/18

Prilog 204 - Industrije, curenje, zagađenje i kontaminacija

Ovo Osiguranje ne pokriva bilo koju odgovornost za:

1) Ličnu povredu ili Tjelesnu povredu ili gubitak, oštećenje, ili gubitak usled korišćenja imovine direktno ili indirektno izazvan curenjem, zagađenjem ili kontaminacijom, pod uslovom da ovaj stav (1) ne važi za odgovornost za Ličnu povredu ili Tjelesnu povredu ili gubitak ili fizičko oštećenje ili uništenje materijalne imovine, ili gubitak korišćenja takve imovine koja je oštećena ili uništena, pri čemu je takvo curenje, zagađenje ili kontaminacija izazvana iznenadnim, nenamjernim i neočekivanim događajem tokom perioda važenja ovog Osiguranja.

2) Trošak uklanjanja, poništenja ili čišćenja supstanci koje su iscurile, zagadile ili kontaminirale osim ukoliko je curenje, zagađenje ili kontaminacija izazvana iznenadnim, nenamjernim i neočekivanim događajem tokom perioda važenja ovog Osiguranja.

3) Novčane kazne, penali, kaznene ili štete kao primjeri.

Ova klauzula ne proširuje ovo Osiguranje tako da pokrije bilo koju odgovornost koja bi bila pokrivena ovim Osiguranjem da ova klauzula nije priključena.

GEORGIOS KARKANIAS
PRESIDENT

3/12/18

Prilog 205 -Isključenje rizika od azbesta

Ova Polisa je izmijenjena i dopunjena tako da ne važi za bilo koji zahtjev ili zahtjeve za odgovornost koja je posljedica proizvodnje ili distribucije ili korišćenja, ili bilo kojeg od navedenog, azbesta ili proizvoda koji sadrže azbestna vlakna i odgovornost koja je posljedica azbestoze ili bilo koje povezane bolesti i odgovornost nastalu zbog inhalacije azbestnih vlakana.

GEORGIOS KARKANIAS
PRESIDENT

3/12/18

Prilog 206 - Isključenje odgovornosti za rizik od ograničenog neispravnog stanja (DE 3)

Ova Polisa isključuje gubitak ili oštećenje i troškove koji su neophodni za zamjenu, popravku ili ispravku

(i) Osigurane imovine koja je u neispravnom stanju zbog nedostatka u specifikacijama projektnog plana ili nedostataka u izradi takve Osigurane imovine ili bilo kojeg njenog dijela

(ii) Osigurane imovine koja je izgubljena ili oštećena kako bi se omogućila popravka ili ispravka Osigurane imovine koja je isključena pod (i) iznad

Isključenje pod (i) iznad ne važi za drugu Osiguranu imovinu koja nije u neispravnom stanju ali je oštećena kao posljedica istog.

U svrhu Polise a ne samo ovog Isključenja neće se smatrati da je Osigurana imovina izgubljena ili oštećena samo na osnovu postojanja bilo kojeg nedostatka u specifikaciji za projektni plan ili izradi Osigurane imovine ili bilo kojem njenom dijelu.

GEORGIOS KARKANIAS
PRESIDENT

3/12/18

Prilog 207 - Isključenje rizika od unapređenja projekta (DE 5)

Ova polisa isključuje:

(i) Trošak koji je neophodan za zamjenu, popravku ili ispravku bilo koje Osigurane imovine koja je neispravna u specifikaciji projektnog plana ili izradi;

(ii) Gubitak ili oštećenje Osigurane imovine koje je izazvano radi omogućavanja zamjene, popravke ili ispravke takve neispravne Osigurane imovine.

Ali, ukoliko oštećenje Osigurane imovine (osim oštećenja definisanog pod (ii) iznad) nastane kao posljedica takvog nedostatka, ovo Isključenje se ograničava na troškove dodatnog rada koji proisteknu i dodatne troškove unapređenja originalne specifikacije projektnog plana ili izrade.

U svrhu Polise a ne samo ovog Isključenja neće se smatrati da je Osigurana imovina izgubljena ili oštećena samo na osnovu postojanja bilo kojeg nedostatka u specifikaciji projektnog plana ili izradi Osigurane imovine ili bilo kojeg njenog dijela.

GEORGIOS KARKANIAS
PRESIDENT

3/12/18

Prilog 208 – Rizici u vezi sa vodom

Ova Klauzula, ukoliko je ugovorena čini sastavni dio polise i važi bez obzira na uslove, odredbe i isključenja sadržana u polisi osiguranja ili odobrena u njoj.

1. Isključenje

1.1 Osiguravač neće nadoknaditi štetu Osiguraniku nastalu zbog:

1.1.1 gubitka ili štete na vezovima, pristaništima, molovima i sličnom izazvane njihovim slijeganjem ili potonućem,

1.1.2 uobičajenim dejstvom rijeke/mora,

1.1.3 gubitkom ili štetom na više od 200 m nezavršenog ili nezaštićenog valobrana, keja ili drugog vodenog objekta,

1.1.4 gubitka, štete ili odgovornosti zbog erozije tla,

1.1.5 iskopavanja ili ponovnog iskopavanja,

1.1.6 izgubljenog ili oštećenog materijala za popunjavanje,

1.1.7 zamjene ili ispravke stubova ili elemenata potpornih zidova,

-koji su nestali ili nisu u liniji ili su zaglavljeni tokom izgradnje,

-koji su izgubljeni ili napušteni ili oštećeni tokom vožnje ili izvlačenja, ili

-koji su prepriječeni zaglavljenim ili oštećenom opremom za stubove ili kućištem,

1.1.8 popravljanja odvojenih ili otkačenih talpi,

1.1.9 ispravke svakog curenja ili prodiranja materijala bilo koje vrste,

1.1.10 kao posljedica toga što stubovi elemenata temelja nisu prošli test nosivosti ili na drugi način nisu postigli svoj projektovani kapacitet nosivosti,

1.1.11 za ponovno uspostavljanje profila ili dimenzija,

1.1.12 bilo koje plutajuće opreme kao što su kesoni, barke i slično i odgovornost koja proističe iz istog,

1.1.13 svake mobilizacije/demobilizacije i/ili drugih troškova koji proizilaze iz pripravnosti/čekanja građevinske opreme na moru zbog vremenskih uslova,

1.1.14 gubitka ili oštećenja zbog vuče žica, sidra, lanaca i bova,

1.1.15 gubitka ili oštećenja zbog uticaja utovara,

1.1.16 pomorske odgovornosti,

2. Definicija

2.1 uobičajena aktivnost mora označava stanje mora, koje se manifestuje do broja 8 na Boforovoj skali, ili stanje plime i oseke, struje i talasa mora, za koje se mora statistički očekivati da će se desiti tokom perioda od 20 godina, koje god je nepovoljnije.

GEORGHOS KARKANIAS
PRESIDENT

31/12/18

3. Garancije

3.1 Dogovoreno je i potvrđeno da će bez obzira na uslove, isključenja ili odredbe sadržane u polisi, Osiguranik:

3.1.1 primati dnevne vremenske izvještaje od lokalne meteorološke stanice tokom perioda važenja osiguranja i imati stalni kontakt s lokalnom meteorološkom stanicom tokom upozorenja datog 12 sati unaprijed za nastupajuću oluju.

3.1.2 uspostaviti navigaciju za javni saobraćaj do gradilišta od najmanje 200m.

GEORGIOS KARKANIAS
PRESIDENT

3/12/18

Prilog 209 - 72 časa

U svrhu primjene franšiza dogovoreno je da svaki gubitak ili šteta na Osiguranoj imovini opisana u detaljima vezano za rizik koja nastane tokom bilo kojeg perioda od sedamdeset dva uzastopna sata a koja je izazvana olujom, nepogodom, poplavom ili zemljotresom smatraće se da je jedan događaj i prema tome čini jednu štetu. U svrhu gorenavedenog, početak svakog takvog perioda od sedamdeset dva sata utvrđuje se prema nahođenju Osiguranika, pri čemu se podrazumijeva, međutim, da ne može postojati preklapanje bilo koja takva dva ili više perioda od sedamdeset dva sata u slučaju štete koja nastane tokom produženog perioda vremena.

U slučaju gubitka ili štete na Osiguranoj imovini gdje važi više od jednog iznosa prikazanog iznad, važiće samo najveći iznos.

GEORGIOS KARKANIAS
PRESIDENT

3/12/18

Prilog 210 – Podjela 50/50

Osiguranik mora pregledati pakovanja po dolasku na Gradilište ili bilo koji prostor za skladištenje izvan gradilišta a oštećena pakovanja se moraju otvoriti odmah. Daje se dozvola da se odloži otpakivanje oštećene ambalaže na 60 dana za ključne proizvode i 120 dana za sve druge proizvode od datuma dospijeća na Gradilište. Oštećenja koja budu otkrivena tokom perioda odloženog otpakivanja isključena su iz ove polise.

U slučaju da se gubitak ili oštećenje na osiguranoj imovini otkrije nakon gorenavedenog perioda odloženog otpakivanja a ne bude moguće da se utvrdi kada ili gdje je nastao gubitak ili šteta, dogovoreno je da se svaki zahtjev za takav gubitak ili štetu dijeli po principu 50/50 između Osiguravača po ovoj polisi i polise za osiguranje robe u transportu, ako su različite.

GEORGIOS KARKANTAS
PRESIDENT

3/12/18

Prilog 211 – Automatsko ponovno pokriće do sume osiguranja

U odsustvu pismenog obavještenja datog od strane Osiguravača kojim se izjavljuje suprotno, odgovornost Osiguravača neće ostati umanjena za iznos bilo koje štete koja se desi, a Osiguranik se obavezuje da će platiti odgovarajuću dodatnu premiju za takvo automatsko ponovno pokriće do sume osiguranja, pri čemu premija neće prelaziti proporcionalni iznos plaćene premije iz prethodnog perioda.

GEORGIOS KARYAMIAS

3/12/18

Prilog 212 - Planovi i dokumenta

U slučaju slučajnog fizičkog gubitka ili slučajne fizičke štete koja se nadoknađuje prema ovoj polisi na planovima, skicama, spisima, dokumentima, rukopisima, ili evidenciji u kompjuterskom sistemu koji čine dio Osigurane imovine, dogovoreno je da će Nadoknada iz ove Polise obuhvatiti i troškove rada i kompjuterskog vremena utrošenog za reprodukovanje takve imovine, uključujući sve troškove koji nastanu pri izradi informacija koje su u njima sadržane, ali

a) ne obuhvata bilo koji gubitak pretrpljen od strane Osiguranika zbog izobličenja ili nedostupnosti takve informacije;

b) limit pokrića:

GEORGIOS KARKANTAS
PRESIDENT

3/12/18

Prilog 213 – Profesionalne naknade

Osiguravač će isplatiti nadoknadu Osiguraniku u pogledu naknada za arhitekte, geodete, konsultante, inženjere i druge naknade koje su dodatne uz one koje su sadržane u procijenjenim projektnim troškovima koji se mogu osigurati a koji su neophodni i razumno nastali pri popravci ili ponovnom uspostavljanju pređašnjeg stanja nakon nastanka štete na Osiguranom projektu zbog bilo kojeg uzroka pokrivenog prema ovoj Polisi. Pokriće je ograničeno na iznos koji je naveden u polisi.

Ovo dodatno pokriće ne obuhvata naknade i troškove koji su povezani s javnim-ovlašćenim procjeniteljima. Na dodatno pokriće primjenjuje se franšiza koja je ugovorena.

Limit pokrića:

GEORGIOS KARKANIAS
PRESIDENT

3/12/18

Prilog 214 - Državni organi

Osiguranje predviđeno ovom polisom na osiguranoj imovini obuhvata i one dodatne troškove ponovnog vraćanja u pređašnje stanje izgubljene, uništene ili oštećene imovine koja je ovim osigurana a koji mogu nastati jedino zbog neophodnog poštovanja građevinskih i drugih propisa iz državne nadležnosti ili utvrđenog u skladu s bilo kojim državnim organom, ali uvjek pod uslovom da:

(a) iznos koji se može dobiti u okviru ove klauzule ne isključuje:

(i) troškove nastale pri poštovanju bilo kojeg od gorenavedenih propisa ili podzakonskih akata

(a) u pogledu štete koja nastane prije odobrenja primjene klauzule,
(b) u pogledu štete koja nije osigurana u okviru ove klauzule,
(c) u okviru kojeg je Osiguraniku uručeno obavještenje prije nastanka štete,
(d) u pogledu neoštećene imovine ili neoštećenih dijelova imovine osim temelja (osim ukoliko je posebno isključeno) onog dijela imovine koja je uništena ili oštećena;

(ii) dodatne troškove koji bi bili potrebni radi dovođenja u pređašnje stanje imovine koja je izgubljena, uništena ili oštećena da nije došlo do neophodnog poštovanja gorenavedenih propisa ili zakonskih akata,

(iii) iznos bilo koje naknade koja proistekne iz porasta vrijednosti kapitala koja može biti plativa u pogledu imovine ili od strane njenog vlasnika zbog poštovanja bilo kojeg od navedenih propisa ili zakonskih akata,

(b) rad na vraćanju u pređašnje stanje mora biti započet i izvršen bez nerazumnog odlaganja i u svakom slučaju mora biti završen u roku od dvanaest mjeseci nakon nastanka štete ili u onom daljem roku koji Osiguravač može dozvoliti (ako se to zahtijeva gorenavedenim propisima ili zakonskim aktima) pod uslovom da odgovornost Osiguravača prema ovom Proširenju time nije uvećana.

Limit pokrića:

GEORGIOS KARKANIAS
PRESIDENT

3/12/18

Prilog 215 -Privremene popravke

Nadoknada predviđena ovom klauzulom obuhvata troškove izvršenja privremenih popravki nakon gubitka ili štete koja je osigurana u okviru ove Polise kako bi se rad na Projektu mogao nastaviti pod uslovom da odgovornost Osiguravača prema ovom memorandumu ne prelazi 15% stvarnih troškova stalne popravke.

Limit pokrića:

GEORGIOS KARKANIAS
PRESIDENT

3/12/18

Prilog 216 – Uklanjanje ostataka

Pokriće po ovoj Polisi obuhvata one troškove koji su neophodni i koje razumno napravi Osiguranik u pogledu uklanjanja ostataka, rastavljanja, razbijanja, podupiranja ili ojačavanja bilo kojeg dijela imovine uništenog ili oštećenog kao posljedica osigurane nepredviđene situacije.

Međutim, pokriće koje je dato ovom klauzulom ne obuhvata troškove raščišćavanja, bilo na imovini Osiguranika ili u oblasti u okruženju imovine, u pogledu zaliha ili proizvoda.

Limit pokrića:

GEORGIOS KARKANIAS
PRESIDENT

3/12/18

Prilog 217 – Minimizacija štete

Osiguranje se proširuje tako da obuhvati odgovornost Osiguranika za troškove koji su nužno i razumno nastali kao posljedica hitne radnje preduzete tamo gdje je šteta neizbježna ili nakon štete radi sprečavanja ili minimiziranja dalje štete na Osiguranoj imovini, pod uslovom da odgovornost Osiguranika za takve troškove ne smije prelaziti iznos za koji bi Osiguravač bio u obavezi da plati da data radnja nije preduzeta i uvjek pod uslovom da ograničenje koje je prikazano u detaljima u vezi sa rizicima za svaki dio gdje je primjenjivo (ili onaj veći iznos koji može biti dogovoren u pismenom obliku od strane Osiguravača, prema njegovom apsolutnom nahođenju, prije nastanka troškova).

Limit pokrića:

GEORGIOS KARKANIAS
PRESIDENT

3/12/18

Prilog 218 - Ograničenje i isključivanje sankcija

Osiguravač ne obezbjedjuje pokriće i neće biti odgovoran da plati bilo kakvu štetu ili da obezbijedi bilo kakav nadoknadu ukoliko bi obezbjeđivanje takvog pokrića, plaćanje takve štete ili obezbjeđivanje takve nadoknade izložilo Osiguravača bilo kakvim sankcijama, zabranama ili restrikcijama po rezolucijama Ujedinjenih Nacija ili trgovinskim ili ekonomskim sankcijama, zakonima ili regulativama Evropske Unije, Ujedinjenog Kraljevstva Velike Britanije ili Sjedinjenih Američkih Država.

GEORGIOS KARKANIAS
PRESIDENT

3/12/18

Prilog 219 – Klauzula o eskalaciji

Budući da vrijednosti definisane u Prilogu predstavljaju Procijenjene Završne Vrijednosti radova i samim tim su privremene, potvrđuje se da će konačne završne vrijednosti radova predmetnog osiguranika biti Sume osiguranja.

Ukoliko Sume osiguranja, definisane na gore-opisan način:

(1) prevazilaze procijenjene završne vrijednosti navedene ovdje, osiguranik/osiguranici potvrđuju da će prijaviti Osiguravaču iznos takvog prekoračenja i da će platiti uvećanu premiju prema dogovorenim stopama, a Osiguravač potvrđuje da će prihvatiti njihov proporcionalni udio povećanja od maksimalno stotinu petnaest procenata (115%) procijenjenih završnih vrijednosti i da neće primijeniti prosjek ni na jednu štetu

ili

(2) su manje od procijenjenih završnih vrijednosti navedenih ovdje, Sume osiguranja proporcionalno će se smanjiti i Osiguravač potvrđuje da će vratiti premiju po dogovorenim stopama srazmjerno umanjenju osigurane sume.

Ovaj tekst Posebnih uslova za osiguranje objekata u izgradnji protiv svih rizika sa svim prilozima stupa na snagu dana 01.11.2013. godine, kada počinje i da se primjenjuje.

Predsjednik Odbora direktora

Zoran Višnjić

GEORGIOS KARKANIAS
PRESIDENT

3/12/13

GEORGIOS KARKANIAS
PRESIDENT

3/12/18

3/12/18

3172118

On the basis of the Law on Insurance (»Official Gazette of the Republic of Montenegro« no. **078/06** and **19/07**) the Articles of Incorporation of „UNIQA neživotno osiguranje" a.d. Podgorica, the following business policy act was passed at the meeting of the Management Board held on August 8th 2009:

UNIQA
osiguranje

CONDITIONS
FOR GENERAL LIABILITY INSURANCE

GEORGIUS KARKANIAS
PRESIDENT

3172/18

I INTRODUCTORY PROVISIONS

Meaning of certain expressions
Article 1

In these conditions, certain expressions shall have the following meaning:

Insurer – joint stock insurance company with which an insurance agreement shall be concluded, »Uniqa neživotno osiguranje« a.d.

Proposer – person that wants to conclude an insurance agreement with the Insurer and for that purpose submits a written Proposal to the Insurer;

Policy holder – person concluding an insurance agreement with the Insurer,

Insurant - person, whose liability is covered by insurance,

Third party – a person that is not the subject of the insurance agreement, i.e. a person whose liability is not covered by insurance. According to these conditions, a third party shall not be considered to be an employee, i.e. any natural person that is employed at the insurant, as well as any other natural person that on any grounds should perform an activity, render services or be trained for work at the insurant, as well as members of the Management Board, Supervisory Board and another management body and their spouses or close relatives. A third person shall not be considered to be either the spouse or other members of the household, as well as other persons that the insurant is obliged to support.

Proposal – written proposal of the Proposer made to the Insurer in order to conclude an insurance agreement.

Insurance policy – written document about the concluded insurance agreement.

Insurance premium – amount paid on the grounds of an insurance agreement.

Insurance sum – max. liability of the insurer per insured case,

Aggregate insurance sum (annual limit) – max. liability of the insurer for all insured cases during the insurance period,

Source of peril – activity (profession), objects (movable and immovable) or a certain feature from which liability as risk covered by this insurance may occur.

Financial loss (economic) – indirect loss that arose due to damage on persons and damage on objects, which represents a gain that the damaged might have reasonably expected according to the regular course or according to special circumstances and the realization of which was prevented with the activity of the person that caused the damage.

Implementation of conditions
Article 2

These conditions shall apply to General liability insurance except of those types of insurance that expressly exclude the implementation of these Conditions.

3/12/18

Provisions of the Terms and conditions for liability insurance, i.e. the provisions of the Law on obligatory relations shall apply to contractual relations that are not regulated with these Conditions.

II GENERAL PROVISIONS

Subject of insurance
Article 3

According to these conditions, the subject of insurance shall be the civil and legal liability of the insurant for losses due to death, bodily injury or impairment of health, as well as damages or destructions of objects of a third party, as well as financial losses.

The insurance shall also refer to liability for damage that occurred due to the:

1) Increase of peril and/or expansion of the insured source of peril that arose during the insurance period,

2) New source of peril that occurred at the insurant after concluding the insurance agreement,

3) Usage, i.e. possessing or rent of land, buildings and premises, that are exclusively used for the needs of an insured activity or profession,

4) Possession of garages that are on (in) insured real estates, if it does not concern a garage used for performing activity or a hotel garage,

5) Use of elevators intended for the transport of persons and cargo,

6) Storage of heating material and power for the exclusive use in performing the insured activity or profession,

7) Theft or disappearance of things of the insurant's employees for personal use, except of money, watches, cameras, valuables of all kinds, securities and documents of all kinds, on condition that the things are placed in closed premises or closed repositories,

8) Losses due to theft or disappearance of objects of third parties.

If it concerns objects mentioned in paragraph 2 items 3, 4, and 5 hereof, the insurance shall include also the liability of the insurant as the investor or contractor of construction works (new buildings, repair, remodelling, whitewashing, digging and similar) if the preliminary value of this works in each separate case should not exceed 10.000 euro.

Insured case
Article 4

An insured case shall be a loss that occurs towards third parties from any activity, possessing of property and objects or from a certain feature as sources of peril that are marked in the insurance policy, and on the basis of the civil and legal liability of the Insurant from which obligations of compensation for damage towards third parties arise or could arise for the Insurant.

GEORGIOS KARKANIAS
PRESIDENT

3/12/18

Temporal insurance validity
Article 5

The insurer shall be obliged only then when the insured case should occur during the insurance validity.

An insured case that occurred during the insurance validity and the cause of which was from the period which preceded the conclusion of the insurance agreement or from the period when the insurance was interrupted, shall be covered by insurance only then when till the insurance commencement or repeated insurance commencement the policy holder or insurant were not familiar and could not be familiar with the cause from which the insured case originated.

Concerning damages arising due to the impairment of health that arise gradually, in case of doubt, it shall be considered that the loss event occurred then when the impairment of health was determined for the first time with the finding of the physician.

The deadline for submitting a request for compensation for damage of a third damaged person, i.e. insurant, on the basis of rights from insurance by the policy concluded in line with the conditions, shall be the deadline determined with the Law on obligatory relations.

Insurance against new sources of peril
Article 6

If the insurance agreement was concluded upon payment of the insurance premium completely or in part, on the basis of the total income, the cover from insurance shall be expanded also to liability from new sources of peril that shall appear at the insurant after concluding the insurance agreement, if no special insurance for that new arising source of peril was concluded.

Immediately after the appearance of a new source of peril, the insurant shall be obliged to inform the insurer in writing about the appearance of a new source of peril.

The insurer shall be obliged to inform the insurant about the acceptance into cover of new sources of peril within 8 (eight) days and on the grounds of a written information from the previous paragraph. If the insurer should not respond within eight days, it shall be considered that the new source of peril was included in insurance, if the mentioned new source of peril should be in line with the valid insurance conditions and premium tariff.

The insurer shall keep the right of calculating additional premium for the cover of new sources of peril from the previous paragraphs hereof, as well as the right of not accepting new sources of peril and it shall inform the policy holder in written form about that within the deadline mentioned in the previous paragraph.

The insurance sum that was agreed on the policy for previously insured sources of peril shall be valid for new sources of peril, too. If the policy should contain various insurance sums for some sources of peril, the insurance sum agreed for a certain source of peril shall be valid.

The insurance of new sources of peril shall not refer to liability from:

- keeping or usage of tracks (railway, funicular railways, cable railways and similar), theatres, cinemas, circuses and stands as well as making of films;
- possession or usage of motor vehicles and other vehicles on motor power (tractors, cultivators, self-propelled work machines), vessels and aircrafts
- production, processing, storage, usage and trade with explosive material, or radioisotopes, if an approval of the competent body is required for this,
- Hunting as activity and hunting sport

GEORGIOS KARAMITAS
PRESIDENT

3/12/18

Inclusions in coverage
Article 7

Unless it is specifically stipulated and quoted in the insurance policy and additional premium is paid, insurance coverage is extended to:

1. other legal or natural person as an additional insurant on which these conditions provide protection from the damage claims of third parties
Insurance coverage that provides to an additional insurant is limited only on its liability arising from the activities of the insurant and/or liability arising from his activity in connection with the activities of the insurant.

2. cross over liability of several insurants who are covered by insurance and listed in the insurance policy, in accordance with point 1. of this paragraph, i.e. insurance coverage is extended to the mentioned insurants so that will be considered that all the insurants have concluded this insurance separately and they can ask each other for damage claims.

Total obligation of the Insurer for the agreed inclusion and expansion of coverage under the previous paragraphs does not exceed agreed insurance sum for the entire period.

Conclusion of insurance agreements
Article 8

The provisions of terms and conditions shall apply for the conclusion of a liability insurance agreement between the insurer and policy holder, except if not otherwise stipulated with these conditions.

The insurance agreement shall be concluded on the basis of a written proposal of the policy holder done to the insurer.

If the insurance agreement is concluded on the basis of the written proposal and the Insurer does not reject it within 8 (eight) days from the date when the proposal arrived to the Insurer, it shall be considered that the proposal is accepted and that the insurance agreement is concluded when the proposer/ policy holder has signed a proposal of insurance.

The signature of the proposer/policy holder on the insurance proposal shall be considered to be the signature on the policy.

Negotiating of deductible
Article 9

In all cases insurance may be agreed with and without participation in claim (deductible) in line with the tariff, except in cases in which obligatory participation in the damage is envisaged.

Insurance sum
Article 10

The insurance sum shall be agreed in a fixed pecuniary amount and it shall be the max. liability of the insurer per one insured case, disregarding of the number of damaged persons and persons the liability of which is covered by insurance, if not otherwise agreed.

The insurance sum from the previous paragraph shall refer also to cases of death, bodily injury or impairment of health, damages or destructions of objects of third parties.

The total liability of the insurer, for all insured cases that occurred in one insurance year shall not exceed amount of 5 (five) agreed insurance sums of paragraph 1 hereof.

The total annual insurance sum shall be reduced with the payment of each separate compensation. After exhaustion of the total annual insurance sum, the insurance shall cease to be valid.

Territorial validity of the insurance
Article 11

In respect of the territorial validity of the insurance, Terms and conditions for liability insurance shall apply.

Exclusions from insurance
Article 12

Upon general exclusions defined with the Terms and conditions for liability insurance, the insurance concluded according to these conditions shall not cover the following claims:

1) that arise from environmental pollution,
2) that arise from products with defect that the Insurant produces or distributes,
3) that originate from objects of third parties possessed by (under control or management of) the Insurant, on any grounds,
4) claims caused by the Insurant who steered the vehicle with license plates, except if the damage should occur while the respective vehicle was not used as work machine,
5) that originate from objects of third parties that the Insurant keeps for professional purposes or that are kept or processed by the Insurant while performing its activity registered in the economic register, or damages caused by these things.
6) damages for which the Insurant shall be legally responsible as the employer pursuant to the provisions of positive legal regulations,
7) procedure of treatment, health and other interventions on animals such as castrating, insemination, shoeing, dressage,
8) due to participation on horse, bicycle, motorcycle and car races, boxing and wrestling fights, as well as participation for the preparation for a race, i.e. fight, except if not specially agreed upon extra payment of the premium.

III SPECIAL PROVISIONS FOR SOME SOURCES OF PERIL

Implementation of special provisions
Article 13

Upon liability insurance from certain sources of peril, in addition to basic provisions of these conditions, also special provisions of these conditions shall apply concerning the volume of cover. In case of deviation from the basic provisions, special provisions shall apply.

GEORGIOS KARKANIAS PRESIDENT

3/12/18

Car services, car mechanic workshops and similar
Article 14

Insurance shall refer also to claims from possessing places for storage of motor vehicles, as well as from the sale of the necessary material for the vehicle power (gasoline, oil, lubricator and similar).

If specially agreed, insurance shall cover liability against theft, damage, destruction or breakage of motor vehicles that are on repair, servicing or check-up in car service workshops, if the damage should arise due to:

- towage, driving, moving of the motor vehicle, trial drive outside the workshop (but not more than to the distance of 1 km from the workshop),
- unauthorized usage of the motor vehicle by the insurant's employees or other persons,
- usage of the crane intended for motor vehicle lifting,
- work of the automatic car wash

Exclusions from liability insurance for property claims on vehicles taken over for repair, servicing or check-up
Article 15

The insurer shall not offer insurance cover for:

1) demands for compensation referring to claims that arose as the consequence of inexpert performance of a direct service (repair, servicing, i.e. check-up), which is a professional activity of the insurant,
2) additional costs due to untimely procurement of spare parts, standard equipment, special tools and equipment necessary to carry out the repair,
3) additional expenses due to the price increase,
4) losses on structure elements and spare parts of cars, that were damaged, defective, worn-out or they should have already been repaired in the moment when the insurant took over the car,
5) claims that arose by the subcontractor of the insurant.

Hospitals, sanatoriums, mental homes, health centres, clinics and similar
Article 16

Insurance shall cover also liability for losses due to damage, destruction, disappearance or theft of objects for personal use of the patient and persons accompanying it, if these objects were given to the insurant to keep them safe.

If specially agreed, the insurance shall cover liability for claims due to disappearance and theft of money, securities, watches, documents, jewellery and other valuables only in case if these objects were given to the insurant for being kept and if these things are kept by the insurant in a locked cash box.

3/12/28

Losses caused during the treatment by doctors, midwives, nurses or assistants and other medical personnel through their work that is not according to the rules of the profession, shall be excluded from insurance (liability for professional/expert errors shall be excluded from insurance).

Distribution of electricity
Article 17

If specially agreed, insurance shall cover also cases in which there is liability of the insurant for claims suffered by the consumer of electricity (due to non-allowed deviation from the nominal voltage or frequency, due to stoppage and interruption in the delivery of electricity and in other cases, if the insurant is responsible for claim).

Companies
Article 18

According to these conditions, the term company shall not mean a business company founded and performing activities in order to gain profit (joint-stock companies, partner companies, public companies)

The insurance shall also cover liability:
1) from having meetings, sessions and performances of the company, stipulated by the Articles of Association or other general act of the company;
2) from possessing buildings, land, premises and devices serving exclusively for the needs of the company (e.g. playgrounds, drill fields, rifle ranges and other);
3) members of the company's management and other persons authorized to represent the company;
4) members of the company when performing activities on performances of the company and regarding these performances, in the interest and for the goals of the company.

For rifle clubs, insurance shall cover liability for claims only if they arose on a place determined for shooting.
Insurance shall comprise liability for damage, disappearance and theft of water vehicles (boats, sailboats and other) taken over for storage on condition that there is a constant guard. Damages on motor vessels shall be covered if the motor is fastened to the boat or stored at night in a closed room.

If specially agreed, insurance shall cover also liability of the company for claims from:
1) Performances that exceed the frame of common performances of the company, stipulated with the Articles of Association of the company;
2) Keeping animals;
3) Installing of stands;
4) Usage of sport grounds and devices (skating rings, slopes for sledging and skiing and other);
5) Activities that are performed by the company as incidental (e.g. restaurants in own management, baths and similar).

Local self-administration
Article 19

In addition to liability for claims that occurred by performing and due to performing the function of the body of local self-administration, the insurance shall include also liability from possessing or

3/12/18

using buildings, land, premises and devices that serve exclusively for the needs of performing operations of local self-administration.

Liability from other activities of local self-administration shall be included in insurance only if each source of peril should be insured separately.

Insurance shall comprise also liability of local self-administration for pure property claims.

Liability of the local self-administration for claims that occurred by death or bodily injury of a person due to attack, violence or terror as well as during public demonstrations and events, as well as for other claims that the local self-administration bodies were obliged to prevent according to valid regulations, shall be excluded from insurance.

Organizers of exhibits, performances, fairs and other events
Article 20

Legal and natural persons as organizers of exhibits, performances, fairs and other events, leaders and keepers of exhibition subjects (exhibits), escorts (guards) of persons and objects on exhibition space, for personal and property claims that the insurant causes to the participants, i.e. visitors of these events and for which it is obliged to pay compensation pursuant to the provisions of the law, may be insured by these conditions.

In line with these Conditions, personal liability for damages caused to participants of horse riding, bicycle, motor bicycle competitions, boxing and wrestling, as well as preparation for these competitions is being covered by the insurance only if agreed specially.

Exclusions from insurance against liability of organizers of exhibitions, performances, fairs and other events
Article 21

The insurer shall not compensate damages that:

a) are the consequence of burglary of exhibition subjects/exhibits,

b) that arise as the consequence of loading and unloading (installing, transport) of exhibition objects (exhibits), except for damages caused by accident on the exhibition subjects (exhibits) that are already set,

c) arise on property which was used for the organization of events (including the object/building in which such an event is organized),

d) are the consequence of activities performed by guest performers, artists, competitors, entertainers and stuntmen,

e) are caused by the organizers i.e. managers of exhibitions i.e. staff responsible for the protection of persons and things on exhibitions and events to one another.

Cloakrooms
Article 22

The insurance shall also cover liability of the insurant due to damage, destruction, disappearance or theft (and also due to replacement) of things given to the cloakroom for storage, with a corresponding confirmation (number, paper pad and similar).

Liability of the insurant for claims due to disappearance or theft of money, securities, valuables, watches and documents of any kind shall be excluded from insurance.

The insurer shall be obliged only when the cloakroom has a constant security guard and where other persons, except of the security guard, shall not have any access.

Persons rendering cleaning services
Article 23

Pursuant to these conditions, the insurer shall compensate property claims caused by the insurant to its contractual partner when rendering cleaning services, which understands the damage of property/things, furniture and equipment and mechanical devices, for which the insurant shall be obliged to pay compensation pursuant to the provisions of the law.

Exclusions from liability insurance of the persons rendering cleaning services
Article 24

The insurer shall not compensate:

a) costs that came from complaints on the quality of cleaning, such as costs of repeated cleaning or subsequent correction of lacks,

b) claims caused outside the place designated in the business agreement to be the place for rendering cleaning services,

c) losses due to theft.

Construction, mounting and similar activity
Article 25

The insurance shall also cover liability for claims arising from levelling of the grounds done by the insurant, if the levelling refers to works that the insurant has to do, whereby liability for damages on the object for the building and defence of which the levelling was done, shall be excluded from insurance.

The insurance shall refer also to liability for claims:

1) on the object on which the insurant shall perform construction or mounting works. In case that the construction or mounting works are performed on the existing object that belongs to the investor, the insurance shall cover claims on the part of the object on which works are done by the insurant.
2) immediately caused by damage of underground devices (such as pipes for gas, water, electricity, sewage and similar) if not specially agreed that also indirect claims shall be included;
3) caused by mining in performing the insurant's activity, but not for claims on immovable objects that during mining are on the distance less than 75 metres from the mining point, if not otherwise agreed.

3/12/18

Liability for the following claims shall be excluded from insurance:

1) on neighbouring construction, due to failure to perform appropriate reinforcement (support and similar);
2) on the construction, i.e. prefabricated object that the insurant builds or on which it works;
3) caused from destroying on immovable objects that are in a circle the radius of which corresponds to the height of the object that is being torn down.
4) if a part of the construction object or some construction and handicraft works are insured, the liability insurance of the contractor of construction works shall not cover damages on other parts of that building object or other building works and handicraft works, that are not insured, i.e. that are insured with another policy;
5) if a part of the prefabricated object or some assembling works are insured, the liability insurance of constructor of assembling work shall not cover claims on other parts of that prefabricated object or other assembling works that are not insured, i.e. that are insured with another policy.
6) on things and their integral parts that are being built in, assembled, repaired, processed and similar, on works that were performed or should be performed by the insurant and on a built-in material for damages that the insurant suffers due to additional works that it had to perform, as well as claims on a certain material.
7) in an agreed warranty period after delivery of work to the constructor
8) after the expiry of 1 month since the insurant completed the final works on the object, and the warranty period still did not start to run
9) on things on an existing object, if by the nature of works the damage of things, which thereby belong to the sources of peril, may be expected
10) for such claims on objects on which must be usually counted during mining works, despite of applying prescribed security measures
11) due to conscious breakage/neglecting of technical instructions or instructions of the valid technical body
12) due to a planning error by the insurant
13) due to expert error in technical consulting and supervision
14) on the basis of membership or partnership in the consortium. If the insurant is engaged as the subcontractor on the basis of an agreement, this shall not be considered to be membership or partnership in the consortium.

The following requests for the compensation for damage shall also be excluded from insurance:

1) which do not belong either to claims due to bodily injury or impairment of health of a person or to damages/destructions of material things of third persons – purely financial losses
2) breach of agreed liabilities
3) Conscious breach of legal rules and instructions given by the competent body
4) non observance of general technical rules, technical instructions, norms, standards or decision of the technical inspection or competent body
5) usage of untried statistical, calculation and other methods as well as unchecked constructions and materials
7) aesthetic errors, non-functionality and non-profitability
8) Environmental pollution as well as all types of pollution and emission
9) Nuclear reaction, nuclear radiation or radio active contamination

Bathing resorts, swimming pools
Article 26

Insurance shall cover also liability of the insurant for damage, destruction, disappearance and theft of things for personal usage of the bathing guests, if these were things locked in cabins or other appropriate premises intended for the storage of things or if they were given to the insurant for storage.

The liability for claims due to disappearance and theft of money, securities, valuables, watches, documents and similar, shall be covered by insurance, only if these things were given to the insurant for storage and if they were kept in a locked cash box.

The insurance shall cover also liability for claims caused by the insurant's things that serve for sport, recreation and leisure of the bathing guests.

Insurance shall not cover liability of the insurant for claims on vehicles on water and land and their spare parts, and on things that are on or in the vehicle.

Ports and public warehouses
Article 27

If specially agreed, insurance shall refer also to liability:
1) for claims that arose on somebody else's goods during: reloading, storage, assembling and tightening; weighing, measuring, counting, sorting, marking and increasing; packing and repair of package; transport and moving over the business premises;
2) for claims against pollution of water, shores and other objects.

Insurance shall not comprise liability:
1) for claims caused by pulling, pilotage, storing and protecting of ships; fastening, untying and saving of boats; transport of persons with pilot ships and rope boats; finishing, processing, refining, repair and similar; egalizing, fumigating, cleaning, whitewashing, mixing, drying and similar; international and internal dispatch of goods (forwarding); putting into storage and keeping of goods in cold storage plants;
2) for indirect damages (e.g.: loss of market, drop of prices, export / import ban).

Agricultural and forest activity
Article 28

Insurance shall cover also liability for claims caused by:
1) Keeping animals, but not claims that arise on animals when mating or artificial insemination, except if not otherwise agreed;
2) Usage of funds for killing weeds, as well as preventing and wiping out of plant diseases and pests on the land of the insurant
3) Doing construction works on the land of the insurant, if the preliminary value of these works does not exceed more than 5.000 euro
4) Incidental activities of the insurant, if the annual income from these activities does not exceed the amount of 1.000 euro
Insurance shall cover also liability of the insurant as a private person.

Railroad siding, funiculars, cable railways, rented rail warehouses, cranes and loading and unloading equipment
Article 29

If the activity of the insurant, as the source of peril from policies is performed by using railroad siding, funiculars, cable railways, rented rail warehouses, cranes and other equipment for loading and unloading, the insurance shall include:

1) liability for damages that arose from the use of the railroad siding (forest, field, industrial), funicular or cable railway, if the transport is done without payment of freight;

3/12/18

2) liability for damages from the use of cranes and loading and unloading equipment, if they did not occur when using equipment that according to its construction leaves the burden to fall;
3) contractual liability for claims that arose from the use of the rented rail warehouse towards the railway.

If specially agreed, insurance shall cover:

1) liability for damages due to the damage of railway cars, ships, motor vehicles by using cranes and other loading and unloading equipment;
2) liability for claims that occurred from the usage of the railroad siding (forest, field, industrial), funiculars or cable railways, if the transport is performed with the premium payment.

Private person – liability in that capacity
Article 30

Insurance shall cover liability of the insurant for damages that it causes in the capacity of a private person in everyday life, apart from the performance of the profession or trade:

1) as owner, user or lessee of a flat or separate house intended for living in it, a small garden and courtyard;
2) as an employer towards a person employed in the household;
3) by possessing and usage of a bicycle without a motor;
4) by going in for sports, except of sports worked out professionally, as well as sport that is connected with the usage of a vehicle having a motor of any kind, sport with aircrafts, hunting and fighting sports (box, fencing, wrestling, judo, karate and other);
5) as holder of tame animals that are not used for purposes of economic operations;
6) side or firearms for the possession of which it has a license and that serves for the defence or participation in shooting competitions.

In the same volume as in paragraph 1 hereof, the insurance shall refer also to liability:

1) of the insurant's spouse and children that live with it in the joint household and that it is obliged to support;
2) persons employed in the household of the insurant when performing activities of that household.

If a part of the flat, i.e. building is used for the performance of a profession, the insurance shall not comprise the liability from holding that part of the flat, i.e. building.

If specially agreed, liability for minor children that do not live with the insurant in the joint household shall be included as well.

Roads - maintenance
Article 31

If specially agreed, insurance shall cover also liability of the insurant for damages that occurred due to:

1) inappropriate protection fences or their inexistence, as well as inexistence of corresponding traffic signs and warnings of dangerous places on roads;
2) not mowing of grass and non-maintenance of plants on the road land;
3) various drifts on the road (snow, earth, garbage and other);
4) not strewing of the road in order to prevent the consequences of freezing.

3192/18

Sport events
Article 32

Insurance shall comprise liability of the organizer of bicycle, motorcycle and car races during the race itself.

If the race is held on open tracks, such a track must be secured by the public security body.

Schools, institutions for education, upbringing, guarding and similar
Article 33

Insurance shall cover also liability of the insurant for losses due to damage, destruction, disappearance and theft of pupils' and cadets' things, only if the things are in corresponding premises used for the storage of these things.

Insurance against liability due to theft or disappearance of clothes, shoes or equipment of pupils and students during the classes may be agreed without concluding the basic insurance according to these conditions.

Liability for losses due to disappearance and theft of money, securities, precious metals, numismatic, philatelist and other collections and valuables of all kinds shall be excluded from insurance.

Insurance shall also cover liability:
1) of members of school councils and councils of educational and other institutions that manage the school, i.e. the institution, according to legal regulations and general acts of the school, i.e. of the educational and other institution;
2) from organizing excursions, picnics, school events and similar

Schools and educational and training institutions for the management of all types of:

1) motor vehicles, aircrafts and other vehicles
2) all types of sport activities (riding, parachute jumping, paragliding, gliding...)

shall be excluded from insurance.

Hotel keeping/restaurant keeping activity
Article 34

According to these conditions, a hotel-keeping/restaurant keeping activity shall understand an activity performed by: hotels, restaurants, boarding-houses, rest homes, organized camps, students', solitary persons' and tourist homes and similar.

Insurance shall cover also liability of the insurant due to damage, destruction, disappearance or theft of things used for personal needs of guests that they brought into the hotel object. Things for personal usage shall be considered to be also an amateur camera with equipment, weekend and camping equipment, radio and TV set, record player with records and cassette player, binoculars, hunting rifle, personal guns and sport equipment.

Insurance shall not refer to liability for claims that occurred:

1) on guests' things during their use, processing or work on them by the insurant;

3/12/18

2) due to disappearance or theft of guests' things if they were brought to the premises that are accessible to everybody, in which food and beverage are served and similar, except if given to the cloakroom for being kept.

If specially agreed, insurance shall cover also liability of the insurant for damages on the vehicle, according to the provisions in **Vehicles - storage**.

Liability for claims due to disappearance or theft of money, jewellery, securities and documents of any kind shall be covered with insurance, if these things were given to the insurant and placed in a locked cash box.

Insurance shall comprise also liability

1) from auxiliary plants that belong to the insurant (such as washing rooms, kitchens, bakeries, butcher shops and similar) and which serve exclusively for the performance of the insurant's activity;
2) from possessing things, premises and playing fields for sport and recreation that are used by guests free of charge.

Entertainment devices
Article 35

Insurance shall cover also liability for claims that arise during the assembling and disassembling of entertainment devices.

Fire companies
Article 36

Insurance shall comprise liability for claims caused during drills, actions and offering help.

Insurance shall cover also personal liability of the members of the company from performing activities in the capacity of a fireman.

Insurance shall refer also to liability of the fire company as the owner, lessee or usufructurary of the land, buildings and premises that serve exclusively for the needs of the company.

Liability for claims on things for the rescue of which the company was called shall be excluded from insurance.

Veterinarians, veterinary clinics and stations
Article 37

Insurance shall cover also liability of the insurant due to the injury of animals during treatment.

If specially agreed, insurance shall cover also liability for claims due to injury of animals referring to castration, gas treatment and artificial insemination.

Vehicles - storing
Article 38

Insurance shall cover also liability of the insurant for damage, destruction, disappearance, theft and replacement of vehicles left for storage (motor vehicles, trailers, motorcycles and bicycles).

GEORGIOS KARKANIAS PRESIDENT

3/12/18

Insurance shall also cover damages on vehicles caused by the insurant in the time period when it renders services for the needs of guests like parking, storing in a garage and similar in the area of the hotel object.

If the vehicle is not placed in a locked garage, claims on objects that are on or in the vehicle, as well as on certain parts of the vehicle, except of things that are produced serially with the vehicle and things that according to the regulations had to be in the vehicle, shall be included from insurance.

The insurer shall be obliged only when the parking lot for vehicles is precisely defined, marked and the vehicles are regularly stored and secured, on condition that there is always a guard.

Buildings and lands (possession, i.e. usage)
Article 39

Insurance shall cover also liability for sources of peril from article 4, paragraph 2 hereof.

Insurance shall cover also liability:

1) for claims caused by persons in charge of maintenance and cleaning of buildings, i.e. land as the source of peril;
2) for claims caused by persons that take the place of an insurant in the capacity of a new beneficiary, usufructuary or trustee in bankruptcy;
3) for damages from the usage of children's playgrounds with belonging equipment for the entertainment of children, if the playground belongs to the building as the source of peril from the policy;
4) from possessing a garden, if it is used for own purposes and if it belongs to the building or land as the source of peril from the policy.

If the building has several users, i.e. owners, the insurer shall not be obliged to compensate for the damage caused by one user, i.e. owner to the other owner, its spouse and persons that it supports.

Requirements of the owner, i.e. user of the flat, its spouse and persons that it supports shall be included in the insurance, if they do not participate in the joint liability for claims with other owners, i.e. users of the building.

Animals
Article 40

Insurance shall cover also the liability of the guard of animals and of other persons that take care about animals that are mentioned in the insurance policy.

Insurance shall cover liability for claims from acts of mating animals, if it has been specially agreed.

Liability from keeping animals such as horses, mules and other towing animals as well as dogs shall be covered by insurance only if insurance of another source of peril (e.g. agricultural farm, liability as a private person) was also concluded.

The liability of the insurer for losses due to damage/injury, destruction, loss or disappearance of somebody else's placed animals (placing in somebody else's stables) shall be excluded.

3/12/18

The insurer shall be obliged to compensate the costs of the veterinary check-up of the insured animals in case of existence of a contagion with the rabies virus up to 1% of the insurance sum mentioned in the policy.

In case of renting out, leasing out of animals, insurance shall not apply, but damages caused by the activity of these animals towards third parties shall be accepted into insurance.

Changes of insurance conditions
Article 41

These conditions may be changed or amended in the way and by procedure in which they were passed, upon prior obtaining of the opinion of an authorized actuary and notifying the Agency for supervision of insurance of Republic of Montenegro.

The policy holder shall be informed about changes and amendments of the Conditions, in compliance with the law.

Implementation of Terms and Conditions for liability insurance and legal regulations
Article 42

Concerning issues that are not regulated with these conditions, the provisions of the Terms and Conditions for liability insurance, i.e. the Law on obligatory relations shall apply.

For issues that are regulated contrary to the provisions of the Terms and Conditions for liability insurance, provisions of these conditions shall apply.

III FINAL PROVISIONS

Article 43

These conditions shall take effect as of the adoption date, and the Terms and conditions for general liability insurance dated June 8th 2008 shall cease to be valid.

President of the Management Board

3/12/08

GEORGIOS KARKANIAS
PRESIDENT

3/12/18

3/12/18

3172178

On the basis of the Law on Insurance of Republic of Montenegro and Corporation of „UNIQA neživotno osiguranje" a.d. Podgorica, the following business policy act was passed at the meeting of the Management Board held on **March 11th 2013**:

SPECIAL CONDITIONS
FOR CONTRACTORS ALL RISK INSURANCE
(translation)

GEORGIOS KARKANIAS
PRESIDENT

3/12/18

Whereas the Insured named here has made to the UNIQA neživotno osiguranje a.d. (hereinafter called the "Insurer") a written proposal which together with any other statements made in writing by the Insured for the purpose of this Policy is deemed to be incorporated herein,

Now this Policy of insurance witnesses that subject to the Insured having paid to the Insurer the premium mentioned in the Schedule and subject to the terms, exclusions, provisions and conditions contained herein or endorsed hereon the Insurer will indemnify the Insured in the manner and to the extent hereinafter provided.

General exclusions

The Insurer will not indemnify the Insured in respect of loss, damage or liability directly or indirectly caused by or arising out of or aggravated by

a) war, invasion, act of foreign enemy, hostilities (whether war be declared or not), civil war, rebellion, revolution, insurrection, mutiny, riot, strike, lockout, civil commotion, military or usurped power, a group of malicious persons or persons acting on behalf of or in connection with any political organization, conspiracy, confiscation, commandeering, requisition or destruction or damage by order of any government de jure or de facto or by any public authority;
b) nuclear reaction, nuclear radiation or radioactive contamination;
c) wilful act or wilful negligence of the Insured or of his representatives;
d) cessation of work whether total or partial.

In any action, suit or other proceeding where the Insurer allege that by reason of the provisions of Exclusion a) above any loss, destruction, damage or liability is not covered by this insurance the burden of proving that such loss, destruction, damage or liability is covered shall be upon the Insured.

Period of cover

The liability of the Insurer shall commence, notwithstanding any date to the contrary specified in the Schedule, directly upon commencement of work or after the unloading of the items entered in the Schedule at the site. The Insurer' liability expires for parts of the insured contract works taken over or put into service.

At the latest the insurance shall expire on the date specified in the Schedule. Any extensions of the period of insurance are subject to the prior written consent of the Insurer.

GEORGIOS KARKANIAS
PRESIDENT

3/12/18

General conditions

1. The due observance and fulfilment of the terms of this Policy in so far as they relate to anything to be done or complied with by the Insured and the truth of the statements and answers in the questionnaire and proposal made by the Insured shall be a condition precedent to any liability of the Insurer.
2. The Schedule and the Section(s) shall be deemed to be incorporated in and form part of this Policy and the expression "this Policy" wherever used in this contract shall be read as including the Schedule and the Section(s). Any word or expression to which a specific meaning has been attached in any part of this Policy or of the Schedule or of the Section(s) shall bear such meaning wherever it may appear.
3. The Insured shall at his own expense take all reasonable precautions and comply with all reasonable recommendations of the Insurer to prevent loss, damage or liability and comply with statutory requirements and manufacturers' recommendations.
4. a) Representatives of the Insurer shall at any reasonable time have the right to inspect and examine the risk and the Insured shall provide the representatives of the Insurer with all details and information necessary for the assessment of the risk.
   b) The Insured shall immediately notify the Insurer by telegram and in writing of any material change in the risk and cause at his own expense such additional precautions to be taken as circumstances may require, and the scope of cover and/or premium shall, if necessary, be adjusted accordingly.

   No material alteration shall be made or admitted by the Insured whereby the risk is increased, unless the continuance of the insurance is confirmed in writing by the Insurer.

5. In the event of any occurrence which might give rise to a claim under this Policy, the Insured shall

   a) immediately notify the Insurer by telephone or telegram as well as in writing, giving an indication as to the nature and extent of loss or damage;
   b) take all steps within his power to minimize the extent of the loss or damage;
   c) preserve the parts affected and make them available for inspection by a representative or surveyor of the Insurer;
   d) furnish all such information and documentary evidence as the Insurer may require;
   e) inform the police authorities in case of loss or damage due to theft or burglary. The Insurer shall not in any case be liable for loss, damage or liability of which no notice has been received by the Insurer within 14 days of its occurrence.

6. Upon notification being given to the Insurer under this condition, the Insured may carry out the repairs or replacement of any minor damage; in all other cases a representative of the Insurer shall have the opportunity of inspecting the loss or damage before any repairs or alterations are effected. If a representative of the Insurer does not carry out the inspection within a period of time which could be considered adequate under the circumstances, but not more than 14 days from the receipt of the insured´s notification, the Insured is entitled to proceed with the repairs or replacement. The liability of the Insurer under this Policy in respect of any item sustaining damage shall cease if said item is not repaired properly without delay. The Insured shall at the expense of the Insurer do and concur in doing and permit to be done all such acts and things as may be necessary or required by the Insurer in the interest of any rights or remedies, or of obtaining relief or indemnity from parties (other than those insured under this Policy) to which the Insurer are or would become entitled or which is or would be subrogated to them upon their paying for or making good any loss or damage under this Policy, whether such acts and things are or become necessary or required before or after the Insured's indemnification by the Insurer.

7. If any difference arises as to the amount to be paid under this Policy (liability being otherwise admitted), such difference shall be referred to the decision of an arbitrator to be appointed in writing by the parties in difference or, if they cannot agree upon a single arbitrator, to the decision of two arbitrators, one to be appointed in writing by each of the parties within one calendar month after

GEORGIOS KARKANTAS
PRESIDENT

3/12/18

having been required in writing so to do by either of the parties, or, in case the arbitrators do not agree, of an umpire to be appointed in writing by the arbitrators before the latter enter upon the reference. The umpire shall sit with the arbitrators and preside at their meetings. The making of an award shall be a condition precedent to any right of action against the Insurer.

8. If a claim is in any respect fraudulent, or if any false declaration is made or used in support thereof, or if any fraudulent means or devices are used by the Insured or anyone acting on his behalf to obtain any benefit under this Policy, or if a claim is made and rejected and no action or suit is commenced within three months after such rejection or, in the case of arbitration taking place as provided herein, within three months after the arbitrator or arbitrators or umpire have made their award, all benefit under this Policy shall be forfeited.

9. If at the time any claim arises under the Policy there is any other insurance covering the same loss, damage or liability, the Insurer shall not be liable to pay or contribute more than their rateable proportion of any claim for such loss, damage or liability.

Section I – Material damage

The Insurer hereby agree with the Insured that if at any time during the period of cover the items or any part thereof entered in the Schedule shall suffer any unforeseen and sudden physical loss or damage from any cause, other than those specifically excluded, in a manner necessitating repair or replacement, the Insurer will indemnify the Insured in respect of such loss or damage as hereinafter provided by payment in cash, replacement or repair (at their own option) up to an amount not exceeding in respect of each of the items specified in the Schedule the sum set opposite thereto and not exceeding in any one event the limit of indemnity where applicable and not exceeding in all the total sum expressed in the Schedule as insured hereby.

The Insurer will also reimburse the Insured for the cost of clearance of debris following upon any event giving rise to a claim under this Policy provided a separate sum therefor has been entered in the Policy.

Special exclusions to Section 1

The Insurer shall not, however, be liable for:

a) the deductible stated in the Schedule to be borne by the Insured in any one occurrence;

b) consequential loss of any kind or description whatsoever including penalties, losses due to delay, lack of performance, loss of contract;

c) loss or damage due to faulty design;

d) the cost of replacement, repair or rectification of defective material and/or workmanship, but this exclusion shall be limited to the items immediately affected and shall not be deemed to exclude loss of or damage to correctly executed items resulting from an accident due to such defective material and/or workmanship;

e) wear and tear, corrosion, oxidation, deterioration due to lack of use and normal atmospheric conditions;

f) loss or damage to construction plant, equipment and construction machinery due to electrical or mechanical breakdown, failure, breakage or derangement, freezing of coolant or other fluid, defective lubrication or lack of oil or coolant, but if as a consequence of such breakdown or derangement an accident occurs causing external damage, such consequential damage shall be indemnifiable;

g) loss of or damage to vehicles licensed for general road use or waterborne vessels or aircraft;

GEUKHUS RANKANIAS PRESIDENT

3/12/18

h) loss of or damage to files, drawings, accounts, bills, currency, stamps, deeds, evidences of debt, notes, securities, cheques;

i) loss or damage discovered only at the time of taking an inventory.

Provisions applying to Section 1

Memo 1 – Sums insured

It is a requirement of this insurance that the sums insured stated in the Schedule shall not be less than

for item 1: the full value of the contract works at the completion of the construction, inclusive of all materials, wages, freight, customs duties, dues, and materials or items supplied by the Principal;

for items 2 and 3: the replacement value of construction plant, equipment and machinery; which shall mean the cost of replacement of the insured items by new items of the same kind and capacity;

and the Insured undertakes to increase or decrease the amounts of insurance in the event of any material fluctuation in wages or prices provided always that such increase or decrease shall take effect only after the same has been recorded in the Policy by the Insurer.

If, in the event of loss or damage, it is found that the sums insured are less than the amounts required to be insured, then the amount recoverable by the Insured under this Policy shall be reduced in such proportion as the sums insured bear to the amounts required to be insured. Every object and cost item is subject to this condition separately.

Memo 2 – Basis of loss settlement In the event of any loss or damage the basis of any settlement under this Policy shall be

a) in the case of damage which can be repaired – the cost of repairs necessary to restore the items to their condition immediately before the occurrence of the damage less salvage, or
b) in the case of a total loss – the actual value of the items immediately before the occurrence of the loss less salvage,

however, only to the extent the costs claimed had to be borne by the Insured and to the extent they are included in the sums insured and provided always that the provisions and conditions have been complied with.

The Insurer will make payments only after being satisfied by production of the necessary bills and documents that the repairs have been effected or replacement has taken place, as the case may be. All damage which can be repaired shall be repaired, but if the cost of repairing any damage equals or exceeds the value of the items immediately before the occurrence of the damage, the settlement shall be made on the basis provided for in b) above.

The cost of any provisional repairs will be borne by the Insurer if such repairs constitute part of the final repairs and do not increase the total repair expenses.

The cost of any alterations, additions and/or improvements shall not be recoverable under this Policy.

GEORGIOS KARKANIAS
PRESIDENT

3/12/18

Memo 3 – Extension of cover

Extra charges for overtime, nightwork, work on public holidays, express freight are covered by this insurance only if previously and specially agreed upon in writing.

SECTION 2 – Third party liability

The Insurer will indemnify the Insured up to but not exceeding the amounts specified in the Schedule against such sums which the Insured shall become legally liable to pay as damages consequent upon
a) accidental bodily injury to or illness of third parties (whether fatal or not),
b) accidental loss of or damage to property belonging to third parties
occurring in direct connection with the construction or erection of the items insured under Section 1 and happening on or in the immediate vicinity of the site during the period of cover.

In respect of a claim for compensation to which the indemnity provided herein applies, the Insurer will in addition indemnify the Insured against
a) all costs and expenses of litigation recovered by any claimant from the Insured, and
b) all costs and expenses incurred with the written consent of the Insurer,
provided always that the liability of the Insurer under this Section shall not exceed the limits of indemnity stated in the Schedule.

Special exclusions to Section 2

The Insurer will not indemnify the Insured in respect of

1. the deductible stated in the Schedule to be borne by the Insured in any one occurrence;

2. the expenditure incurred in doing or redoing or making good or repairing or replacing anything covered or coverable under Section 1 of this Policy;

3. damage to any property or land or building caused by vibration or by the removal or weakening of support or injury or damage to any person or property occasioned by or resulting from any such damage (unless especially agreed upon by endorsement);

4. liability consequent upon

   a) bodily injury to or illness of employees or workmen of the Contractor(s) or the Principal(s) or any other firm connected with the project which or part of which is insured under Section 1, or members of their families;
   b) loss of or damage to property belonging to or held in care, custody or control of the Contractor(s), the Principal(s) or any other firm connected with the project which or part of which is insured under Section 1, or an employee or workman of one of the aforesaid;
   c) any accident caused by vehicles licensed for general road use or by waterborne vessels or aircraft;
   d) any agreement by the Insured to pay any sum by way of indemnity or otherwise unless such liability would have attached also in the absence of such agreement.

Special conditions applying to Section 2

1. No admission, offer, promise, payment or indemnity shall be made or given by or on behalf of the Insured without the written consent of the Insurer who shall be entitled, if they so desire, to take over and conduct in the name of the Insured the defence or settlement of any claim or to prosecute for their own benefit in the name of the Insured any claim for indemnity or damages or otherwise and shall have full discretion in the conduct of any proceedings or in the settlement of any claim and the Insured shall give all such information and assistance as the Insurer may require.

3/12/18

2. The Insurer may so far as any accident is concerned pay to the Insured the limit of indemnity for any one accident (but deducting therefrom in such case any sum or sums already paid as compensation in respect thereof) or any lesser sum for which the claim or claims arising from such accident can be settled and the Insurer shall thereafter be under no further liability in respect of such accident under this Section.

General provisons

The integral part of this Annex are following Causes stated below, which preconditioned to the types of works, the way of construction, natural or any other circumstances and conditions (which refer or efect on construction performance), amend, expand, narrow, exclude or present other changes of contracting conditions.

GEORGIOS KARKANIAS
PRESIDENT

7

3172/18 l

l

GEORGE KARKANIAS
PRESIDENT

3/12/18

3/12/18
l

3/12/18
l

On the basis of the Law on Insurance (»Official Gazette of the Republic of Montenegro« no. **078/06** and **19/07**) and the Articles of Incorporation of „UNIQA neživotno osiguranje" a.d. Podgorica, the following business policy act was passed at the meeting of the Management Board held on August 8th 2009:

UNIQA
osiguranje

CONDITIONS
FOR PROFESSIONAL LIABILITY INSURANCE AND LIABILITY INSURANCE FOR PRODUCTS WITH DEFECT

GEORGIOS KARKANIAS
PRESIDENT

3192198

I INTRODUCTORY PROVISIONS

Meaning of certain expressions
Article 1

In these conditions, certain expressions shall have the following meaning:

Insurer – joint stock insurance company with which an insurance agreement shall be concluded, »Uniqa neživotno osiguranje« a.d.

Proposer – person that wants to conclude an insurance agreement with the Insurer and for that purpose submits a written Proposal to the Insurer;

Policy holder – person concluding an insurance agreement with the Insurer and paying the insurance premium,

Insurant - person whose liability is covered by insurance,

Insurance policy – written document (on the form determined by the Insurer) about the concluded insurance agreement.

Insurance premium – amount paid on the grounds of an insurance agreement.

Proposal – written proposal of the Proposer made to the Insurer in order to conclude an insurance agreement.

Insurance sum per one loss event – max. liability of the insurer by an insured case,

Aggregate insurance sum (annual limit) – max. liability of the insurer for all insured cases during the insurance period,

Source of peril – activity (profession), objects (movable and immovable), legal relation or a certain feature from which liability as risk covered by this insurance may occur.

Third party – a natural or legal person using the services, i.e. product of the Insurant on the basis of an agreement, legal regulation or another written act.

Pure financial loss – a loss that exclusively caused a financial loss and is in no way connected with the damage on things or the damage on persons.

Implementation of conditions
Article 2

These conditions shall apply to Terms and Conditions for liability insurance.

3/12/18

Insured risks
Article 3

Pursuant to these conditions, the following risks may be insured:

1) professional liability risk of the insurant

2) Liability risk of the insurant for products with defect

Provisions of these Liability Insurance conditions shall apply on losses that occur as a consequence of performing professional activity of the Insurant and from liability insurance for products with defect.

Insurance against new sources of peril
Article 4

If specially agreed, the cover from insurance shall be expanded also to liability from new sources of peril, that occurred with the appearance of new sources of peril at the insurant, i.e. with the change of legal regulations that regulate the activity of the insurant, after concluding the insurance agreement, if no separate insurance was concluded for that new arising source of peril.

Immediately after the appearance of a new source of peril, the insurant shall be obliged to inform the insurer in writing about the appearance of a new source of peril.

The insurer shall be obliged to inform the insurant about the acceptance into cover of new sources of peril within 8 (eight) days and on the grounds of a written information from the previous paragraph. If the insurer should not respond within eight days, it shall be considered that the new source of peril was included in insurance, if the mentioned new source of peril should be in line with the valid insurance conditions and premium tariff.

The insurer shall keep the right of calculating additional premium for the cover of new sources of peril from the previous paragraphs hereof, as well as the right of not accepting new sources of peril and it shall inform the policy holder in written form about that within the deadline mentioned in the previous paragraph.

The insurance sum that was agreed on the policy for previously insured sources of peril shall be valid for new sources of peril, too. If the policy should contain various insurance sums for some sources of peril, the insurance sum agreed for that certain source of peril shall be valid.

Inclusions in coverage
Article5

Unless it is specifically stipulated and quoted in the insurance policy and additional premium is paid, insurance coverage is extended to:

1. other legal or natural person as an additional insurant on which these conditions provide protection from the damage claims of third parties
Insurance coverage that provides to an additional insurant is limited only on its liability arising from the activities of the insurant and/or liability arising from his activity in connection with the activities of the insurant.

2. cross over liability of several insurants who are covered by insurance and listed in the insurance policy, in accordance with point 1. of this paragraph, i.e. insurance coverage is extended to the mentioned insurants so that will be considered that all the insurants have

GEORGIOS KARKANIAS
PRESIDENT

3/12/18

concluded this insurance separately and they can ask each other for damage claims.

Total obligation of the Insurer for the agreed inclusion and expansion of coverage under the previous paragraphs does not exceed agreed insurance sum for the entire period.

Conclusion of insurance agreements

For the conclusion of a professional liability insurance agreement and liability agreement for products with defect, the provisions of Terms and Conditions shall apply, except if not otherwise stipulated with these conditions.

The insurance agreement may be concluded on the basis of an oral or written proposal of the policy holder done to the insurer.

If the insurance agreement is concluded on the basis of the written proposal and the Insurer does not reject it within 8 (eight) days from the date when the proposal arrived to the Insurer, it shall be considered accepted the proposal and that the insurance agreement is concluded when the proposer/ policy holder has signed a proposal of insurance.

The signature of the proposer/policy holder on the insurance proposal shall be considered to be the signature on the policy.

II SPECIAL PROVISIONS FOR PROFESSIONAL LIABILITY INSURANCE

Article 6

Provisions of Terms and conditions for liability insurance and provisions of these conditions shall apply to professional liability insurance.

Pursuant to these conditions, professional liability insurance shall understand insurance cover for the made professional error, badly done or inexpert proceeding, i.e. omission of the service renderer (insurant) the consequence of which shall be:

- Pure financial loss
- Death, impairment or worsening of health of the third party.
- Additional costs or profit loss of the client that arose due to non-professional and inexpert performance of services.

Insured case

Article 7

An insured case shall be a loss that was caused to the third party by professional error, badly done or inexpert proceeding, i.e. omission of the insurant and on the grounds of which the request for compensation from insurance on the basis of liability might occur.

It shall be considered that the insured case occurred at the moment when the loss event the consequence of which was the loss from the previous paragraph hereof, started producing effect:

- If the insured case is based on a written document of any kind, it shall be considered that the moment of its effect occurred at the moment when the insurant signed that document
- If the insured case occurred due to omission or oversight, it shall be considered that the insured case started with effect on the moment when an omitted action should have been

3/12/18

taken at the latest in order to avoid damage.

- In all other cases it shall be considered that the insured case started producing effect on the moment when at the latest it issued a wrong instruction or made a wrong action.

In cases of occurrence of serial claims, provisions of the Terms and conditions for liability insurance shall apply.

Temporal insurance validity
Article 8

The insurer shall be liable if the claim occurred during the insurance validity, i.e. not later than in the period of two years from the moment of the insurance end, and the loss event started with effect in the period of the insurance duration.

General exclusions concerning professional liability insurance
Article 9

Upon general exclusions defined with the Terms and conditions for liability insurance, the insurance concluded by these conditions shall not cover the following claims:

1) claims excluded with the Conditions for general liability insurance and terms and conditions for liability insurance

2) claims of aesthetic nature that occurred as the consequence of inadequate rendering of services,

3) liability of the insurant on the basis of contractual expansion of its liability also to cases for which by law it is not liable

4) claims caused outside the territory of the Republic of Montenegro, except if the territorial insurance validity is not expanded with the insurance agreement,

5) claims on roads that are not the result of accident and which were caused by vehicles or work machines the insurant was operating with,

6) losses or damages on constructions (e.g. roads, embankments, supporting walls etc.) due to weight or movement of heavy machines and vehicles, or claims caused by wading of the soil/land or crops,

7) claims from activities the consequence of which is environmental pollution,

8) claims caused by original agricultural products (farming products, products of cattle and fish raising), and hunting products.

1) Liability insurance for architects, planners, engineers, consultants and persons performing supervision

Article 10

Upon these conditions, legal and natural persons that offer services in the feature of the engineer or supervisory bodies, i.e. architects and planners may be insured, for claims that are caused as the consequence of a made professional error, badly done or inexpert proceeding, i.e. omission and which is contrary to the rules of the profession.

Insurance shall cover claims that arise during the performance of operations by the insurant, architects, engineers, planners or supervisory bodies that are employed or are in another contractual relation which is not employment with the insurant and for which the insurant shall be

GEORGIOS KARKANIAS
PRESIDENT

3 | 12178

obliged to pay compensation pursuant to the provisions of the Law on obligatory relations and other positive legal regulations.

The insurer shall cover requests for compensation that result from

1) errors in plans and projects that the insurant worked out or revised,
2) errors in plans and projects done by architects, engineers that are employed or in another contractual relation with the Insurant,
3) claims from the field of operations of the supervisory engineer shall be covered by this insurance, if the supervision activity is done by the insurant concerning the project that is worked out on the basis of own plans.

Exclusions from liability insurance of architects, planners, engineers - consultants and persons performing supervision

Article 11

In addition to exclusions mentioned in the insurance conditions for general liability, the insurant shall not compensate the following:

1) when the insurant performs the activity out of the conditions prescribed by law and when it has no corresponding licenses or permits
2) when the insurant participates or should participate in performing works, building or assembling, or processing of a product in the feature of the main contractor, subcontractor, supplier, entrepreneur or in any other feature.
3) exceeding of authorities that result from the contract on the basis of which the Insurant performs an activity for the client of the Insurant.
4) in case when the insurant knew or could have known that there were legal reasons due to which it was obliged to reject to perform the activity for its client.
5) Activity of the insurant as the advisor, leader or employee in a company, association, union or enterprise of any kind.
6) Prognoses of optimization, speculation, terms and similar.
7) To miss the terms for the delivery of plans and drawings, if these terms are not determined by law or regulation
8) Explanation within the duration of works and delivery deadlines
9) Claims referring to giving licenses
10) Requests for claims that would unavoidably occur even during regular planning and/or building of objects. Costs of defence against requests that refer to the aforementioned are covered with the insurance cover.
11) Exceeding of the calculation if it is exclusively in calculation, and there are no lacks in the construction itself
12) Violation of the obligation of secrecy
13) Losses at loans or capital investments
14) violation of copyrights, patents, trade marks
15) Additional costs incurred due to repeated planning/building because of difficulties in the procurement or fitting of materials,
16) Costs that result from non-observing the final deadlines for planning or additional costs due to such a delay,
17) Losses or additional costs that result from price increase,

3/12/18

18) Losses that result from lack of aesthetic nature or obsolescence of the subject of work,

19) Losses that result due to reasons attributed as the subcontractor's fault

20) Losses that result from non-obtaining corresponding official licenses,

21) Losses due to interruption of work or production loss due to an insured event or loss of profit of the damaged party/submitter of the request for compensation,

22) Losses that result from errors in the data base that is included in technical and financial plans on condition that these data were not provided, i.e. checked by an engineer.

2) Liability insurance for persons rendering security services

Article 12

Upon these conditions legal and natural persons that perform operations of security protection of people and property may be insured against liability for damages that might appear for the person ordering services of security or a third party referring to the performance of security services and that are the consequence of the made professional error, badly done or inexpertly done proceeding i.e. omission.

The insurant shall be any natural or legal entity (entrepreneur or business company) performing operations regarding security and that possesses a corresponding license issued by the competent body in line with the law.

Insurance shall cover claims that arise when rendering security services to the insurant or persons that are employed at the insurant and for whom the insurant is obliged to pay indemnity pursuant to the provisions of the Law.

The insurer shall cover requests for compensation that result from:

a) injuries of persons (death, permanent disability, bodily injury) that are suffered by third parties due to implementation of excessive force during the property protection,

b) injuries of persons (death, permanent disability, bodily injury) that are caused to third persons (but excluding persons that illegally break through the protected zone or object) or their assigners or officials when protecting persons or property,

c) losses or damages on protected objects, furniture and devices, caused when protecting persons and property,

on condition that the liability of the Insurant for the caused losses may be determined in all three cases.

Exclusions from liability insurance of persons offering security services

Article 13

The insurer shall neither compensate for damages that result from illegal usurping of the guarded property/objects (theft, burglary) nor for damages covered by other insurances.

7) Insurance of professional liability of doctors and other medical staff

Article 14

According to these conditions, the subject of insurance shall be the civil and legal liability of the insurant for losses that occurred due to death, bodily injury or health impairment of third parties that occurred as the consequence of a professional error of the doctor or other medical staff.

3/12/18

On behalf of the insurant, the insurer shall indemnify the submitter of the request for compensation for damages due to impairment of health, bodily injury or death that were caused because of the violation of professional rules when performing medical services for which the Insurant is obliged to pay compensation pursuant to positive legal regulations of the Republic of Montenegro.

Exclusions from professional liability insurance of doctors and other medical staff

Article 15

This insurance shall not cover the following cases:

1) Losses that might occur from the activity of the insurant that is performed without the permit of the competent body,
2) Losses that arise from handling movable and immovable property/objects which is necessary for rendering medical services,
3) Costs suffered by the submitter of the demand for compensation due to the non-performance or delay in performing services,
4) Expenses which refer to the repeated performance of defective services or expenses necessary to correct lacks,
5) Loss of objects that the patient takes with it,
6) Losses caused during surgery in the field of plastic/aesthetic surgery except for reconstruction surgery being the consequence of an accident and/or congenital defect.
7) Negative effect of x-rays or other forms of radiation, including also losses caused by radioactive materials,
8) Loss – bodily injury, worsening of the general health conditions that may be attributed to the transport by an ambulance vehicle,
9) Losses caused during the activity of a university or academic student, health care of a specialist or pupil of a secondary medical school within education, practice or examinations,
10) Expenses for criminal charges or subjects in court against the media,
11) Other losses from liability which were not caused in regard to the medical profession.
12) Offered medical help without valid diagnostic or therapeutic support;
13) Usage of medicine intended for body weight reduction;
14) Activities of a dentist in general anaesthesia;
15) Demands for compensation that are in any way connected with the infection with HIV and hepatitis viruses;
16) Fines determined by courts and state bodies;
17) Clinical examinations; intra-hospital infections;
18) All procedures referring to safeguarding, transport and blood tests concerning blood transfusion;
19) All actions referring to artificial insemination;
20) Medical procedures of an unqualified or insufficiently qualified medical staff;
21) Accidents at work/illnesses due to work.

GEORGIOS KARKANIAS
PRESIDENT

3/12/18

8) Liability insurance of physical therapists

Article 16

Upon these conditions persons rendering services in the feature of a physical therapist may be insured for losses due to death or health impairment of third parties that arise as the consequence of the made professional error, badly done or inexpert procedure, i.e. omission and which are contrary to the rules of the profession.

Insurance shall cover claims that arise when performing jobs by the insurant, physical therapist that is employed or in another contractual relation which is not employment with the insurant, and for which the insurant is obliged to pay indemnity pursuant to the provisions of the Law on obligatory relations and other positive legal regulations.

Exclusions from liability insurance of physical therapists

Article 17

This insurance shall not cover the following cases:

a) jobs/activities performed by the Insurant without corresponding license,

b) disturbance of the body of aesthetic nature and psychic health disturbance,

c) losses from liabilities that were not caused in relation to the activity of the Insurant.

9) Liability insurance of auditors, actuaries, tax advisors, renderers of accounting services, court experts and lawyers

Article 18

These conditions shall provide insurance cover for pure financial losses suffered by third parties due to professional error or omission of the insurant in performing jobs related to rendering professional services.

According to these conditions, third parties shall be considered to be persons that are not subjects of the insurance agreement, i.e. which are not the policy holder, insurant or insurer.
According to these conditions third parties shall not be considered to be:

1. employees, i.e. each natural person that is employed at the insurant, as well as any other natural person that on any grounds performs the job or offers services or is getting trained for work at the insurant
2. spouse and other members of the household and other persons that the isurant is obliged to support;

a) Authorized auditors

Article 19

This insurance shall cover liability for caused damage, if it occurred due to professional accounting or auditing activity of the Insurant, if the activity is performed in line with the Law on accounting and audit.

The insurant shall be a natural person having the title of an authorized auditor and that is the member of the Chamber of authorized auditors of the Republic of Montenegro or that works in an auditing company that is registered by the Chamber and which performs auditing operations in line with the Law on accounting and audit.

GEORGIOS KARKANIAS PRESIDENT 3/12/18

An insured case shall be an event the consequence of which shall be pure financial loss that was caused to the client by professional error, badly done or inexpert proceeding, i.e. omission of the insurant concerning:

- audit of financial reports of business companies covered with the Law on accounting, determination of the regularity, reliability of financial reports,
- assessment, verification, giving expert opinions in the meaning of offering consulting services of the auditor concerning establishment, transformation i.e. cease of work of business companies,
- jobs of a financial, tax and accounting expert referring to the establishment, transformation, continuation of operations, financial management and IT system of the business companies
- giving expert opinions and advice regarding that,
- performance of other tasks of the auditor, that are stipulated by the law.

b) Authorized actuaries
Article 20

The insurant shall be a natural person having the title of an authorized actuary and performing actuary operations in compliance with the Law on Insurance.

This insurance shall cover the liability for caused damage if it occurred from professional actuary activity of the Insurant, if the activity is performed in line with the Law on insurance.
The activity of the Insurant shall understand to give opinion about:

- the manner of calculating the insurance premium tariff;
- whether technical reserves were created in line with the regulations and acts of the insurance company's business policy acts;
- the business policy acts in the procedure of their passing, i.e. in the procedure of changing and amending and implementing the business policy acts of the insurance company;
- financial reports and annual report on business operations of the insurance company;
- report on performing the policy of coinsurance and reinsurance;
- whether the mathematical reserve was calculated in line with the law;
- transfer of the insurance portfolio;
- whether the solvency margin and guarantee reserves of the insurance company are correctly calculated.

b) Tax advisors
Article 21

The insurant shall be a natural person or auditing company dealing with rendering of consulting services and giving advice referring to regulations that control tax obligations of business companies.

An insured case shall be an event the consequence of which shall be a pure financial loss that was caused to the client by professional error, badly done or inexpert proceeding, i.e. omission of the insurant concerning giving advice, rendering of consulting services and assistance referring to tax, tax obligations of legal and natural persons, participation in carrying out obligations, representation in tax bodies, elaboration of tax return, and on the basis of a written authority.

c) Rendering of accounting services
Article 22

An insurant shall be a natural person – auditor or authorized accountant that possesses a certificate of the Chamber of authorized accountants and auditors, or an auditing company

3/12/18

dealing with offering consulting services and elaboration of financial reports of business companies in line with the Law on accounting and audit of the Republic of Montenegro.

An insured case shall be an event the consequence of which shall be a pure financial loss that was caused to the client by professional error, badly done or inexpert proceeding, i.e. omission of the insurant in performing tasks referring to the:

- Elaboration of the system and methodology of the accounting policy, financial reports, elaboration of financial reports,
- Booking of data through the General ledger,
- Analysis of data shown in reports and in accounting records, drawing of conclusions that give grounds for reaching adequate decisions, preparation and delivery of correct internal and external information in line with the law and basic accounting principles,
- delivery of tax returns to tax bodies, representation at tax bodies.

c) Court experts
Article 23

An insurant shall be a natural person having the title of a court expert dealing with rendering services as an expert of forensic medicine and that is registered in the register of court experts within its specialty.

d) Lawyers
Article 24

This insurance shall cover liability for damage caused to the client of the lawyer, if it occurred from professional lawyer activity of the Insurant, i.e. if the activity is performed in compliance with the Law on legal practice and other positive legal regulations of the Republic of Montenegro.

The client of the lawyer shall be a person to whom the insurant shall offer legal assistance on the basis of a lawyer contract, proxy, authority or another written act. Offering legal help shall mean:
- to give legal advice;
- to write legal suits, complaints, requests, petitions and other petition requests;
- elaboration of contracts, wills, statements and other documents;
- representation and defence of natural and legal persons in courts and other state bodies, companies and other legal entities;
- representation of natural and legal persons in their legal operations by concluding contracts and settlements, receipt and disbursement of money and giving statements and cancellations;
- performance of other jobs concerning legal help on behalf of and for the account of a natural or legal person on the basis of which this person realizes any right.

Intermediaries and representatives in insurance
Article 25

This insurance shall cover liability for the caused damage, if it occurred from professional activity of the insurant, if the activity was carried out in line with the Law on insurance or from possessing things or from the features as sources of peril that are marked in the insurance policy, i.e. in the insurance conditions.

GEORGIOS KARAMITAS 3/72/78 l

Trustees in bankruptcy
Article 26

This insurance shall cover liability for caused damage, if it occurred from the scope of operations of the trustee in bankruptcy, if the operations of the trustee in bankruptcy were performed in line with the law on bankruptcy.

When concluding an insurance agreement, the policy holder or insurant shall be obliged to deliver data to the insurer about legal entities for which the insurant was appointed trustee in bankruptcy.

The scope of operations of the trustee in bankruptcy shall be all jobs defined with the Law on bankruptcy that the insurant shall be obliged to perform on the basis of the Decision of the court on instituting a bankruptcy procedure with which the insurant shall be appointed the trustee in bankruptcy and particularly:

- taking measures in order to protect the bankruptcy debtor's property;
- inventory of property;
- elaboration of the opening balance;
- insurance of property and employment of persons;
- payments to creditors and delivery of the closing balance;
- and performance of other operations from the Law on bankruptcy.

Real estates agents
Article 27

This insurance shall cover liability for the damage caused to the client, if it occurred from professional activity of the insurant, if the activity is performed in line with the law.

The client of the real estates agent shall be a person that participates in the business and that is an ordering party to the intermediary for proceeding and if an intermediary agreement about that exists signed by the seller or purchaser, i.e. one participant in the exchange, lessor or lessee.

Exclusions from insurance
Article 28

This insurance shall not offer protection in cases of:

1) non-observance of the agreed deadlines, if the client of the insurant is responsible for that;
2) exceeding of authorities;
3) compensation due to damage, destruction or losing of money, checks or securities or their consequences;
4) actions of the Insurant as the supervisory, consulting, managing or steering body, director, chief, proxy or employee in a company, union, association, alliance or company of any kind;
5) forecasts of optimization, speculation, terms and similar;
6) financial, pecuniary, credit operations (credits, mortgages) operations referring to securities;
7) violation of the obligation of secrecy;
8) exceeding of cost and loan calculations, as well as loss at loans or capital investments;
9) fraud by the employee of the Insurant or other persons that help, i.e. work for it;
10) for losses that occurred due to lack in the cash box, errors at disbursement or fraud by the employee of the insurant.
11) penalties charged to the insurant due to omission.
12) losses caused by the insurant to its contractual partners by violating contractual provisions with which expand its liability also to cases for which otherwise by law it would not be responsible.

GEORGIOS KANKANIAS PRESIDENT

3/12/18

13) exceeding of authorities that result from the lawyer's contract, authority, proxy or another written act on the basis of which the insurant shall offer legal assistance to the client;
14) losses caused by activities of the actuary for which the take-away of the authorities in line with the Law on Insurance is foreseen;
15) exceeding of authorities;
16) in case when the actuary knew or might have known that there were legal reasons due to which it was obliged to refuse to offer professional services;
17) in case that the lawyer refuses to offer legal assistance by order of the court and there are no legal reasons due to which it is obliged to refuse to offer legal assistance;
18) if the lawyer performs operations in cooperation with pseudo-clerks;
19) demands for compensation that arose after the expiry of 30 days after the resignation of the proxy, and which do not concern cases of denying legal assistance according to the Law on legal procedure;
20) exceeding of authorities from the law on bankruptcy procedure which regulates the scope of operations of the trustee in bankruptcy;
21) in case when the insurant knew or might have known that there were legal reasons due to which it was obliged to refuse the appointment for trustee in bankruptcy;
22) in case that the insurant was appointed the trustee in bankruptcy with the decision of the court and there were legal reasons due to which the insurant cannot or could not be appointed the trustee in bankruptcy;
23) if the loss arose due to activities of the trustee in bankruptcy that was approved by the bankruptcy council or due to proceeding according to the instruction of the bankruptcy judge;
24) if the loss arose due to activities of persons that were employed by the trustee in bankruptcy, except if the loss occurred due to its failure to perform supervision over their work;
25) if the trustee in bankruptcy participates in the bankruptcy procedure in line with the Law on bankruptcy and liquidation of banks and insurance companies;
26) if the trustee in bankruptcy performs operations in cooperation with pseudo-clerks;

III SPECIAL PROVISIONS FOR LIABILITY INSURANCE FOR PRODUCTS
Article 29

Liability risk for the product quality shall be insured in line with the provisions of the Terms and Conditions for liability insurance, general liability insurance conditions and these conditions.

According to these conditions, an insured case shall be a loss that occurs from the product after its delivery due to lacks, about the existence of which the insurant did not know and the consequence of which shall be:
1) bodily injuries, illness or death of a third party,
2) losses in the form of destruction, damage or disappearance of things of third persons,

Products shall be considered to be all material objects or parts of them that appeared from the registered activity of the insurant by observing all legal and technical regulations, as well as regulations on providing quality standards, with the goal to sell these things as goods on the market. According to these conditions, products shall not be intellectual and other services, nor basic agricultural products (products from earth, cattle raising and fishing), including also additional equipment and package.

A product defect shall be an error in: planning, construction, material or manufacture, as well as lacks in the instructions for the correct usage of the product and which may cause bodily injuries, illness or death of the third party, as well as damage, destruction or disappearance of things of third parties. There is a lack when the product does not provide safety that is expected with right, taking into account all circumstances, including also advertising, then the purpose for which it is intended and the time when it was put into circulation. It shall not be considered that the product has a defect just because later a product of higher quality was put into circulation.

GEORGIOS KARKANIAS PRESIDENT 3/12/18

The delivery shall be a real delivery to the third party performed by the insurant, disregarding of the legal grounds of the delivery. The delivery shall be considered to be performed in the moment when the insurant loses the option of disposal, supervision and control over the product, i.e. option to influence the product or its implementation.

According to these conditions, the source of peril shall be the product with defect after its delivery by the insurant;

Temporal insurance validity

Article 30

The insurer shall be liable if the damage occurred in the period of the insurance duration, i.e. not later than in the period of one year from the moment of the insurance end, and the delivery of the product was performed within the insurance duration period.

Expansion of insurance

Article 31

In case of liability insurance for products with defect, the liability of the insurant due to damage caused by integral parts of the product and other elements that were ordered and procured from other persons and which the insurant – producer integrates into products under its name, shall be included, too.

If specially agreed, insurance shall cover also the insurant's liability for damages to third parties that occurred from the final product by building in, connecting, mixing the insurant's product with other products without any lacks.

On the grounds of this expansion, the insurer shall cover the following claims:

a) expenses incurred successively concerning the technical and financially justified repair or amendment of the final product, including also costs of disassembling and removing of the defective product made by the Insurant that was already assembled by the user and expenses of assembling new products in order to replace the previous ones (but excluding procurement and transport costs of the new product), or

b) costs of the user of the final product due to the usage of the defective product, or

c) difference in value if the final product might be sold at a reduced price,

d) expenses incurred by the user concerning the disassembling, assembling and cleaning of machines and technical equipment because of defective products.

Insurance shall cover also damages related to poisoning with salmonella, but not more than up to 20% from the insurance sum, which is stated on the policy.

Exclusions concerning liability insurance for products with defect

Article 32

The insurer shall not compensate for the following:

1. if the product was not delivered to the market or the producer produced or distributed the

GEDIMINAS KARVANIAS PRESIDENT

3/12/18

product outside the frame of its usual business activity,

2. the product was without errors in the moment of elaboration or distribution and the cause of the error occurred later, or if that cause could not be recognized in the moment of elaboration and distribution,
3. the damage was not caused due to lack/defect of the insured part of the product, but it occurred due to the structure or composition of the end/final product composed of that defective part; or the defective/lacking final product might be attributed to the user's manual issued by the producer of the final product.
4. the liability for damages that occurred due to unusual usage of the product or usage of the product for purposes it is not intended for.
5. losses for which it cannot be proved that the product had a lack and that there is no causative connection between the product with defect and suffered damage.
6. losses from products that the insurant has not delivered.
7. losses from a product with lack that probably was not existing at the time when the insurant delivered the product or that lack appeared later.
8. losses from a product that was not intended for sale and delivery by the insurant, or from a product that was not produced within the regular activity.
9. losses due to a product with lack that arose due to the reconciliation of the product's features with the prescribed norms.
10. losses from products with lack, if the level of scientific and technical knowledge when the product was delivered, was not enabling to discover lacks, or the causative connection between the loss and lack of the product.
11. liability of the insurant for losses when the insurant has knowledge about the defect or lack of the product;
12. losses if the producer i.e. insurant should not check the quality of the built-in parts which it buys at others and which it integrates into the products;
13. losses on the produced, i.e. sold/delivered products, as well as on their spare parts;
14. losses that occur from a product that was subsequently processed or adapted;
15. losses that result from a product that was alienated from the producer without its knowledge or that the producer gave somebody as a gift;
16. costs of withdrawing the product from the market (product recall);
17. losses that do not belong either to losses due to the bodily injury or health impairment of a person or to material losses in the form of damage, destruction or disappearance of things – pure financial losses;
18. obligations of compensation for damage on the basis of causative losses as for example work interruption or end of production;
19. Insurance shall not offer compensation for damages that occurred from products the usage of which or effect concerning concrete purposes of use according to corresponding know-how of the technique and science were not sufficiently tried out. In order to consider the product from the previous paragraph sufficiently tried out, it shall be necessary to issue a corresponding permit (attestation) for the product itself and its use on the basis of corresponding legal and administrative regulations.
20. purely financial losses
21. losses that arose concerning aviation products

GEORGIOS KARKANIAS PRESIDENT

3/12/18

Except if not separately agreed, the insurer shall not accept and shall not compensate for:

1. claims caused by wrapping;
2. claims when the insurant or persons working for it set, built-in or fixed that defective product by themselves, or they ordered the product to be set, built-in or fixed by their order and for their account;
3. losses at parts, equipment or devices of motor vehicles, aircrafts or vessels;
4. losses of third parties that arise in the way that with the help of machines delivered (also maintained or fixed) by the insurant, things with defect were produced or processed, without any existence of damage on things in the sense of damage or destruction of material things and their consequences;
5. liability for products that are explosives and/or explosive substances;
6. costs of repair, reconstruction, modification or replacement of the product and/or its part and any financial loss due to necessary mentioned costs.

Changes of insurance conditions and premium tariff

Article 33

These conditions may be changed or amended in the way and by procedure as they were passed, upon prior obtaining of the opinion of an authorized actuary and notifying the Agency for supervision of insurance of Montenegro.

The policy holder shall be informed about the changes and amendments of these Insurance conditions, in compliance with the law.

Implementation of Terms and Conditions for liability insurance and legal regulations

Article 34

Concerning issues that are not regulated with these conditions, the provisions of the Terms and Conditions for liability insurance, i.e. the Law on obligatory relations shall apply.

For issues that are regulated contrary to the provisions of the Terms and Conditions for liability insurance, provisions of these conditions shall apply

III FINAL PROVISIONS

Article 35

These conditions shall take effect as of the adoption date.

President of the Management Board

_____

3/12/18

GEORGIOS KARKANIAS

3/12/18

GEORGIOS KARKANIAS
PRESIDENT

3/12/18

3/12/18

3/12/98

On the basis of the Law on Insurance (»Official Gazette of the Republic of Montenegro« no. **078/06** and **19/07**) and the Articles of Incorporation of „UNIQA neživotno osiguranje" a.d. Podgorica, the following business policy act was passed at the meeting of the Management Board held on August 8th 2009:

UNIQA
osiguranje

CONDITIONS
FOR LIABILITY INSURANCE OF THE EMPLOYER

GEORGIOS KARKANIAS
PRESIDENT

3/12/18

I INTRODUCTORY PROVISIONS

Meaning of certain terms

Article 1

Certain terms in these conditions shall have the following meaning:

Insurer – joint stock insurance company with which an insurance agreement shall be concluded, »Uniqa neživotno osiguranje« a.d.;

Proposer – person who wishes to conclude an insurance agreement with the Insurer and for that purpose submits a written Proposal to the Insurer;

Policy holder – person who shall conclude an insurance agreement with the insurer and pay the insurance premium;

Insurant - person whose liability is covered with insurance;

Insurance policy – written document on a concluded insurance agreement;

Insurance premium – amount that shall be paid on the basis of the insurance agreement;

Proposal – written proposal of the Proposer made to the insurer in order to conclude an insurance agreement;

Insurance sum – max. obligation of the insurer per insured case,

Aggregate insurance sum (annual limit) – max. liability of the insurer for all insured cases during the insurance period,

Source of peril – activity (profession), objects (movable and immovable), legal relationship or a certain feature out of which liability may arise as risk covered with this insurance.

Employee – domestic or foreign natural person that is employed with the employer, as well as a person that performs operations on any grounds or is getting trained for work with the employer except of a person that is employed at the employer in order to perform operations of a support staff.

Implementation of conditions

Article 2

These conditions shall apply with the Terms and conditions for liability insurance.

II GENERAL PROVISIONS

Subject of insurance

Article 3

The subject of these conditions shall be the civil and legal liability of the insurant – employer for the damage caused due to death, injury of body or health, i.e. damage or destruction of the employees' objects, caused by a sudden and unexpected loss event in the business premises of

GEORGIOS KARAMANIAS PRESIDENT

3/12/18

the employer, i.e. on places where operations from the activity of the employer – insurant are being performed.

This insurance shall cover liability of the insurant – employer for the caused damage if it occurred or from the registered activity of the insurant or from possessing things or from the feature as the source of peril that are marked in the insurance policy.

The insured source of peril mentioned on the policy shall comprise also the liability of the insurant against the utilization, i.e. possessing, rent or usufruct of land, objects and premises that are exclusively used for the needs of the insured activity or profession.

The insurance shall comprise also liability of the insurant for damages suffered by persons that perform work on any grounds or are getting trained for work with the employer, except of persons that are employed at the employer in order to perform operations of supporting staff,

a) whether when performing operations or trainings in the business premises of the Insurant,

b) or outside the premises of the Insurant during work which is done by order or in interest of the Insurant.

Insured case

Article 4

It shall be considered that the insured case arose on that moment when the loss event suffered by the employee, on the basis of which a request for the compensation from insurance against the insurant – employer might arise and on the basis of the civil and legal liability in accordance with article 3 hereof started being effective.

Several loss events that arose due to the same cause or from identical timely connected causes shall be considered to be one insured case – serial damages.

In case of serial damage, the moment when the first claim occurred shall be considered to be the moment of occurrence of it and in regard to this moment the volume of the agreed insurance cover for the whole claim in a row shall be determined.

Timely validity of the insurance

Article 5

The insurer shall be obliged only then when the insurance case should occur during the insurance validity.

The insured case that occurred during the insurance validity and the cause of which from the period that precedes the conclusion of the insurance agreement or from the time when the insurance was interrupted, shall be covered with insurance only then when the policy holder or insurant were not familiar and could not be familiar with the cause from which the insured case originates, up to the beginning of insurance or repeated start of insurance.

Concerning damages due to the injury of health that occur gradually, in case of doubt, it shall be considered that the loss event occurred then when for the first time with the finding of the physician the injury of health was determined.

The deadline for submitting a request for compensation for damage of a third damaged person, i.e. insurant on the basis of right from insurance by the policy concluded in line with these conditions shall be the deadline determined with the Law on obligatory relations.

GEORGIOS KARKANIAS
PRESIDENT

3/12/18

Insurance against new sources of peril

Article 6

If specially agreed, the cover from insurance shall be expanded also to liability from new sources of peril that shall appear at the insurant after concluding the insurance agreement, if no special insurance for that new arising source of peril was concluded.

Immediately after the appearance of a new source of peril the insurant shall be obliged to inform the insurer in writing about the appearance of a new source of peril.

The insurer shall be obliged to inform the insurant about the acceptance into cover of new sources of peril within 8 (eight) days and on the grounds of a written information from the previous paragraph. If the insurer should not respond within eight days, it shall be considered that the new source of peril was included in insurance if the mentioned new source of peril should be in line with the valid insurance conditions and premium tariff.

The insurer shall keep the right of calculating additional premium for the cover of new sources of peril from the previous paragraphs hereof, as well as the right of not accepting new sources of peril and it shall inform the insurer in written form about that within the deadline mentioned in the previous paragraph.

The insurance sum that was agreed on the policy also for previously insured sources of peril shall be valid for new sources of peril. If the policy should contain various insurance sums for some sources of peril, the insurance sum agreed for a certain source of peril shall be valid for it, which shall be determined with the annex to the insurance agreement.

Insurance sum

Article 7

The insurance sum shall be agreed in a fixed pecuniary amount and it shall represent the max. liability of the insurer per one insured case from article 4 hereof disregarding of the number of damaged persons and persons the liability of which is covered with insurance, if not otherwise agreed.

The insurance sum from the previous paragraph refers to cases of death, injury of body or health, damages or destruction of objects of third persons.

The total liability of the insurer for all insured cases that occurred in one insurance year, may not exceed the amount of 5 (five) agreed insurance sums from paragraph 1 hereof.

The total annual insurance sum shall be decreased with the payment of each single compensation. After the exhaustion of the total annual insurance sum, the insurance shall cease to be valid.

Article 8

The payment of insured sums on the basis of life insurance agreement of the employee, i.e. insurance agreement of the employee against the consequences of an accident, concluded by the insurant shall not be included into the amount of compensation from liability insurance of the insurant that the insurer shall be obliged to pay out to the submitter of the claim request.

The upper limit of the insurer's liability as well as the deductible amount shall be defined with the insurance agreement.

GEORGIOS KARKANIAS PRESIDENT

3/12/18

Insurance validity by territory

Article 9

Regarding the territorial validity of the insurance, the provisions of the Terms and conditions for liability insurance shall apply.

Exclusions from insurance

Article 10

Along with general exclusions defined with the Terms and conditions for liability insurance, the insurance concluded according to these conditions shall not cover the following claims:

1) claims by loss event if the insurant should cause them by intent or gross negligence. According to these conditions, intent or gross negligence shall be considered to be:

   - if the insurant should not conclude a settlement with the employee and it comes out from the factual status that with denial of settlement obvious injustice would be done,
   - If the insurant was informed about the lacks of material, raw materials and products as well as means for work,
   - settlement concluded with intent contrary to the valid regulations,
   - giving orders to the employee for performing operations contrary to internal acts of the employer,
   - giving orders to the employee to perform activities referring to the work contrary to regulations on safety and health at work

2) claims in regard to professional illnesses or injuries at work that occurred besides all the measures of the employer in order to protect the employees,

3) claims for which the insurant shall be responsible as handling the vehicle and which are covered with obligatory insurance against liability of the motor vehicle user (MTPL), excluding claims that occur during the repair or maintenance of the vehicle that are being qualified as accidents regarding work,

4) pure financial claims,

5) claims suffered by employees on the way to and from the place of work as the consequence of an accident except if the accident should occur during the travel by means of transportation owned by the insurant or rented by the insurant.

6) the insurer shall not cover liability for a damage due to participation on horse, bicycle, motorcycle and car races, boxing and wrestling fights as well as participation on preparations for a race, i.e. a fight (training) that shall be organized by the insurant for its employees

7) Claim requests for compensation for damages:
   - On products sold by the insurant as well as damages caused by deficiency of a product or deficiency of the performed work after the transfer (product liability),
   - On employees' objects that do not belong into personal staff of the employee which are necessary or usual for performing work with the employer.
   - claims on transportation means owned by the employee shall not be compensated,
   - Because of the use of unattested working tools and auxiliary means for work,
   - Recourse requests of social insurance funds, pension and disability insurance funds as well as other funds that pay out compensations on the grounds of paid in contributions shall be excluded from insurance.
   - environmental damages
   - permanent temperature effects, gases, steam, humidity or precipitation (smoke, dust, soot) that caused damages gradually.

GEORGIOS KARKANIAS
PRESIDENT

3/12/18

Changes of insurance conditions and Premium tariffs

Article 11

In the event of changed conditions and tariffs, the Insurer is obligated to inform policy holder in writing or in another suitable way at latest within 30 days before the expiration of current year of insurance. Policy holder may cancel the agreement within 30 days of receiving notice. In this case the agreement shall cease by expiration of the current year of insurance.

If the policy holder does not cancel the agreements as defined in previous paragraph, amended agreement shall be applied to the beginning of the next period of insurance.

Implementation of Terms and conditions for liability insurance and legal regulations

Article 12

For issues that are not regulated with these conditions, provisions of the Terms and conditions for liability insurance, i.e. the Law on obligatory relations shall apply.

For issues regulated contrary to the provisions of the Terms and conditions for liability insurance, the provisions of these conditions shall apply.

Jurisdiction in case of dispute

Article 13

In case of dispute between the policy holder – insurant and insurer, the venue shall be the insurer's domicile.

II FINAL PROVISIONS

Article 14

These conditions may be changed or amended in the way and by procedure according to which they were passed, with the prior obtaining of opinion of the authorized actuary and by informing the Agency for supervision of the insurance of Republic of Montenegro.

The policy holder shall be informed about the changes and amendments of these insurance conditions, in compliance with the law.

These conditions shall take effect as of adoption date

President of the Management Board

3/12/18

MOODY'S
INVESTORS SERVICE

Print Email Export PDF

Rating Action: Moody's affirms Greek banks' deposit ratings at Caa3; upgrades large banks' senior debt ratings and baseline credit assessment

Global Credit Research - 26 Jun 2017

Rating actions follow Greece's upgrade to Caa2 (positive)

Limassol, June 26, 2017 -- Moody's Investors Service (Moody's) has today affirmed the Caa3 long-term deposit ratings of Alpha Bank AE, Eurobank Ergasias S.A., National Bank of Greece S.A., and Piraeus Bank S.A.. At the same time, Moody's has also upgraded all four banks' baseline credit assessment (BCA) to caa2 from caa3, the long-term senior unsecured ratings to (P)Caa3 from (P)Ca, and the long-term counterparty risk assessment to Caa2(cr) from Caa3(cr). The long-term deposit ratings for Alpha Bank AE and National Bank of Greece S.A. carry positive outlooks, while those of Eurobank Ergasias S.A. and Piraeus Bank S.A. carry stable outlooks. The long-term deposit ratings of Attica Bank S.A. were affirmed at Caa3 with stable outlook, as well as its BCA of caa3, while the bank's counterparty risk assessment was upgraded to Caa2(cr) from Caa3(cr).

These rating actions follow the successful completion of Greece's second review for its support programme, which also triggered an upgrade of Greece's government bond rating to Caa2 (positive) from Caa3 (stable). The higher BCAs primarily reflect the improved operating environment in Greece, which has resulted in Moody's raising the country's Macro Profile to 'Very Weak+' from 'Very Weak', as well as improvements in banks' funding profile, lower funding costs, the return to marginal core profitability and the likely continuation of this trend in 2017-18. In addition, the BCAs also take into account the prospects for further modest improvements in banks' financial fundamentals stemming from the potential return of more deposits into the banking system and gradual reduction of nonperforming loans, as the economy starts to show signs of recovery.

The affirmation of the banks' Caa3 deposit ratings is primarily driven by the rating agency's 'Loss Given Failure' (LGF) analysis of banks' liability structure and the relatively small pool of unsecured liabilities available to absorb losses in a potential bank resolution scenario. The deposit ratings also reflect the on-going deposit controls in Greece, and the fact that depositors do not have instant access to the full amount of their deposits. The banks' senior unsecured ratings were upgraded to (P)Caa3 from (P)Ca based on the full application of the rating agency's LGF analytical approach following the stabilisation of banks' liability structures. Previously these debt ratings were benchmarked at Ca based on expected losses, following the liability management exercises and exchange offers to senior bondholders that banks carried out in late 2015, as part of their last recapitalisation.

Moody's said that its Greek bank ratings balance the improvements in their credit profiles against the still significant downside risks stemming from the fragile operating environment in Greece and the very high level of nonperforming loans.

A full list of affected ratings is provided at the end of this press release.

RATINGS RATIONALE

UPGRADES OF BCAs TO caa2 FROM caa3

The upgrade of the four Greek banks' BCAs to caa2 from caa3 reflects the following factors:

-- GREECE'S MACRO PROFILE CHANGED TO 'VERY WEAK+' FROM 'VERY WEAK'

Following the sovereign rating upgrade, the macro profile for Greece that is used in Moody's banking scorecards that derive the BCAs has been changed to 'Very Weak+' from 'Very Weak', due to the rating agency's improved view of the country's institutional strength factor. This was primarily triggered by the conclusion of the second review of the country's adjustment programme, and the fact that public institutions in Greece have benefited from the technical assistance provided by the official creditors. Greece's macro profile also reflects the difficult credit and funding conditions, with structural challenges faced by all banks.

-- IMPROVED FUNDING PROFILES

The BCA upgrades also reflect the recent improvements in their funding profiles with the reduction of the high cost Emergency Liquidity Assistance (ELA), which was around €41 billion for the system in May 2017, down from €87 billion in June 2015. Moody's expects further reduction in the banks' dependence on ELA, following the conclusion of the second review of the country's support programme by its official lenders (EC/ECB/ESM/IMF). This development should improve confidence in the banks, resulting in gradual deposit inflows from the approximately €10 billion of cash still placed outside the banking system. The rating agency also expects a gradual relaxation of the capital controls that remain in place in Greece, which allow depositors to withdraw only €840 every two weeks. Full repayment of the ELA is one of Greek banks' top priorities, although this is unlikely to materialise for all four banks over the next 12-18 months. The inter-bank repo market has been available to Greek banks so far, allowing them to partly reduce their ELA balances.

-- BETTER PROFITABILITY PROSPECTS

The BCA upgrades also consider the improved earnings prospects for these banks, following the conclusion of the second review, which will likely enhance investor and depositor confidence, reducing funding costs. Concurrently, Moody's expects that lower funding costs and operating expenses will support pre-provision income in 2017-18, and bottom-line profits will be largely driven by the level of provisioning requirements. During 2016, pre-provision income for the banking system increased by around 32% with almost all banks being marginally profitable, limiting any capital consumption, while the first quarter 2017 results suggest that the improving trend will continue in 2017.

Moody's considers that the BCA of caa2 for all four banks appropriately balances these recent improvements in their standalone credit profiles as well as the considerable downside risks stemming from the still high level of non-performing exposures (NPEs) that were at around 45% of total exposures (including off-balance sheet items) as of March 2017. The rating agency believes that over the next 12-18 months, banks' performance will depend on their ability to reduce the level of NPEs mainly through restructurings that will also generate additional income.

ATTICA BANK BCA AFFIRMED AT caa3

Attica Bank's BCA was affirmed at caa3 reflecting the bank's significant asset quality challenges, with the highest NPE ratio among its peers, as well as its ongoing capital needs that have yet to be fully covered. In addition, the bank is currently undergoing restructuring and has yet to show concrete evidence that it has the capacity to return to sustainable profitability. The rating agency believes that the standalone credit profile of Attica Bank is weaker than its local peers, as reflected by the lower BCA. Moody's said that the higher sovereign rating now allows certain rating differentiation among Greek banks, while prior to this rating action all Greek banks were rated at the same level towards the end of the rating scale. For more details on Attica Bank, please see individual bank section below.

DEPOSIT RATINGS AFFIRMED AT Caa3; OUTLOOK CHANGED TO POSITIVE FROM STABLE FOR TWO BANKS

Related Issuers

Alpha Bank AE
Alpha Credit Group plc
Alpha Group Jersey Limited
Attica Bank S.A.
Emporiki Group Finance Plc

Related Research

Credit Opinion: Eurobank Ergasias S.A.: Semiannual Update
Credit Opinion: National Bank of Greece S.A.: Semiannual Update
Credit Opinion: Piraeus Bank S.A.: Semiannual Update
Credit Opinion: Attica Bank S.A.: Semiannual Update
Credit Opinion: Alpha Bank AE: Semiannual Update

GEORGIOS KARKANIS
PRESIDENT

03/12/18

The affirmation of the banks' Caa3 deposit ratings primarily reflects banks' relatively small pool of unsecured obligations and minima subordinated liabilities available to absorb potential losses in case of a bank resolution scenario. Accordingly, depositors remain vulnerable to bail-in risks within the context of the Bank Recovery and Resolution Directive (BRRD) transposition law that was passed in Greece in 2015. Although Greek depositors were excluded from bail-in in the last few years, Moody's considers that the relative risks are still high and thus positions long-term deposits, senior unsecured debt and subordinated debt at the same rating level of Caa3 based on the rating agency's LGF analysis of banks' liability structure.

The long-term deposit ratings of Caa3 also take into consideration the on-going capital controls in place as well as the implied losses faced by depositors that do not have instant access to the full amount of their funds. All banks' Caa3 deposit ratings are positioned one notch lower than the recently revised local-currency deposit ceiling for Greece of Caa2.

The change in the deposit rating outlook to positive from stable for Alpha Bank and National Bank of Greece reflects the rating agency's opinion of these banks' marginally stronger standalone credit profiles than their peers, and its expectation that going forward their liability structure through more deposits could induce a higher deposit rating. Alpha Bank has a stronger tangible capital position than its peers, while National Bank of Greece has a better funding profile with lower ELA dependence than the other banks. The individual bank sections below provide more details in this respect.

SENIOR AND SUBORDINATED RATINGS UPGRADED TO (P)Caa3 from (P)Ca AND C RESPECTIVELY; JUNIOR INSTRUMENTS AFFIRMED AT C(hyb)

The upgrade of the four banks' senior debt ratings to (P)Caa3 from (P)Ca and subordinated debt ratings to (P)Caa3 from (P)C reflect Moody's loss given failure (LGF) analysis of their liability structure, which indicates that such obligations should be placed at the same level as deposits. This is driven by the relatively thin cushion that banks have on their balance sheets to absorb losses in a potential bank resolution scenario. The rating agency notes that a large proportion of Greek banks' liabilities are in the form secured obligations, either through the ELA mechanism, or the ECB or the inter-bank repo market, limiting the pool of creditors available to absorb losses.

Prior to this rating action, Moody's positioned the ratings of these debt instruments based on an expected loss basis, as part of banks' liability management exercises and voluntary exchange offers towards investors in late 2015, when banks were carrying out their third round of recapitalization over the last few years. The senior debt ratings outlook is positive for Alpha Bank and National Bank of Greece, and stable for Piraeus Bank and Eurobank.

At the same time, Moody's affirmed the C(hyb) ratings assigned to the two systemic banks' non-cumulative Tier 1 preferred stock. These affirmations were driven by these instruments' structural subordination to senior and subordinated debt, and the higher likelihood that they could sustain significant losses before any senior and subordinated debt holders are affected in a potential bank resolution scenario.

INDIVIDUAL BANKS

— ALPHA BANK

Alpha Bank's BCA upgrade to caa2 from caa3 and its positive rating outlook take into account its relatively high pro-forma common equity Tier 1 (CET1) ratio of 17.3% in March 2017, following the recent sale of its operations in Serbia. Moody's notes that Alpha Bank has the lowest level of eligible deferred tax assets (DTAs) on its balance sheet at around €3.4 billion in March 2017, which comprised around 38% of its nominal CET1 capital. This level positions the bank at the stronger end in terms of loss-absorbing tangible capital available among its local systemic peers, underpinning Alpha Bank's positive rating outlook. Moody's considers such DTAs as a weak form of capital, in view of Greece's low rating.

The bank's ratings also consider its return to positive profitability with a net profit of around €46 million for the first three-months of 2017 while its nonperforming loans (NPL) and nonperforming exposures (NPE) ratio stood at around 38% and 54% respectively as of March 2017. NPL and NPE provisioning coverage was around 60% and 49%, respectively. Moody's believes that the relatively high NPL provisioning coverage provides the bank with more flexibility to actively manage its NPL portfolio. The bank's ELA as of March 2017 stood at €12.2 billion (down from €19.8 billion in December 2015, comprising 19% of its total assets, although Moody's expects this type of funding to reduce further in 2017-18.

— ATTICA BANK

The affirmation of Attica Bank's BCA at caa3 takes into consideration its CET1 ratio of 14.8% at December 2016, but also the fact that this is still short of around €85 million that the bank needs to raise in order to be fully compliant with the Bank of Greece's adverse scenario capital estimate. Moody's understands that the bank has agreed with a potential investor aiming to cover this capital shortfall through a deal that will also involve the management of a pool of NPEs.

The bank, which is the smallest among all rated Greek banks with a market share of only around 2%, reported losses of around €50 million in 2016, as its NPE ratio increased to 61% in December 2016, from 56% in December 2015, which is the highest among local peers. The bank's ELA dependence was around €1 billion as of December 2016, comprising around 28% of its total assets. The rating agency expects that on-going restructuring at the bank, by the new top management is likely to start yielding results in 2017-18, although Attica Bank's performance is likely to still lag behind its peers.

— EUROBANK ERGASIAS

Eurobank's BCA of caa2 takes into account its reported CET1 ratio of 17.3% in March 2017, up from 16.5% in March 2016. Nonetheless, Moody's considers the bank to have a lower quality of capital than its peers, in view of its eligible DTAs (€4 billion) and the state preference shares of around €950 million that the bank retains on its balance sheet and will need to repay at some stage. The rating agency estimates that around 75% of the bank's nominal CET1 capital is in the form of either eligible DTAs or preference shares, leaving minimal loss-absorbing tangible common equity available.

The bank's profit in the first three months of 2017 amounted to around €37 million, while its NPL and NPE ratio were at around 35% and 45%, respectively, as of March 2017. Eurobank's NPL and NPE provisioning coverage was around 66% and 51%, respectively. The bank's ELA as of March 2017 stood at €12.2 billion, comprising around 19% of its total assets, although Moody's notes that the bank was able to reduce this ELA dependence significantly from €22.9 billion in June 2015.

— NATIONAL BANK OF GREECE

The bank's BCA upgrade to caa2 from caa3 and its positive rating outlook takes into consideration its strong savings franchise in Greece, and its ELA balance that was the lowest among its peers at €5.6 billion, comprising 7.4% of its total assets as of March 2017. Moody's expects NBG to be the first bank in Greece to fully repay its ELA in the next 12-18 months, mainly through the sale of its foreign subsidiaries and its insurance arm and through more customer deposits.

National Bank of Greece (NBG) had a pro-forma CET1 ratio, incorporating the recent sale of its Bulgarian operations, of 17% in March 2017 from 16.3% in December 2016. However, this healthy regulatory ratio is undermined by the bank's high eligible DTAs (€4.8 billion), which comprised around 73% of its nominal CET1 capital as of March 2017. NBG is likely to further enhance its CET1 capital through the sale of more non-core assets going forward.

The bank's NPL and NPE ratios in Greece stood at 33% and 44%, respectively, as of March 2017, while the NPL and NPE provisioning coverage was 75% and 57%, the highest within its local peer group. The rating agency believes that recoveries from the NPL portfolio could further enhance the bank's core pre-provision income, which increased by 30% year-on-year in the first three-months of 2017, combined with further reduction in its operating expenses.

GEORGIOS KARKANIAS
PRESIDENT

— PIRAEUS BANK

Piraeus Bank's BCA of caa2 considers its increased CET1 ratio to 16.8% in March 2017 from 11.2% in September 2015, including the €2 billion CoCos that the bank still retains but will have to repay back to the state-owned Hellenic Financial Stability Fund (HFSF) at some stage. The bank's eligible DTAs (€4.1 billion) comprised around 60% of its nominal CET1 capital, excluding its CoCos, undermining the quality of its capital position.

Moody's considers Piraeus Bank's asset quality position to be among the weakest in the system due to its numerous take-overs of smaller problematic banks in the last few years, which resulted in an NPL and NPE ratio of around 38% and 55%, respectively, as of March 2017. In addition, the bank's NPL and NPE provisioning coverage was at 68% and 48%, respectively. However, the rating agency expects the bank's

03/12/18

asset quality to gradually improve in view of its focus and active management of its NPLs, and the additional tools provided to the banks for managing their NPLs through recent legislative measures. The bank reported a net loss of around €6 million during the first three-months of 2017, although Moody's positively views the bank's ability to increase its pre-provision income by 11% year-on-year.

WHAT COULD MOVE THE RATINGS UP/DOWN

Over time, upward deposit and senior debt rating pressure could arise following a stabilisation of the country's macro-economic environment, combined with an improvement in banks' asset quality, profitability and funding. The return of more deposits back to the banking system would also increase the pool of unsecured obligations available to banks, which could trigger a deposit and senior debt rating upgrade driven by the rating agency's LGF approach.

Greek banks' deposit and senior debt ratings could be downgraded in the event of political turmoil in the country for an extended period of time that substantially affects domestic consumption and economic activity, which have gradually been recovering from a very low base.

The principal methodology used in these ratings was Banks published in January 2016. Please see the Rating Methodologies page on www.moodys.com for a copy of this methodology.

THE SPECIFIC RATING ACTIONS IMPLEMENTED TODAY ARE AS FOLLOWS:

Upgrades:

..Issuer: Alpha Bank AE

.... Senior Unsecured MTN, Upgraded to (P)Caa3 from (P)Ca

.... BACKED (Government) Senior Unsecured MTN, Upgraded to (P)Caa2 from (P)Caa3

.... Subordinate MTN, Upgraded to (P)Caa3 from (P)C

.... Adjusted Baseline Credit Assessment, Upgraded to caa2 from caa3

.... Baseline Credit Assessment, Upgraded to caa2 from caa3

.... Counterparty Risk Assessment, Upgraded to Caa2(cr) from Caa3(cr)

..Issuer: Alpha Credit Group plc

.... BACKED Senior Unsecured Regular Bond/Debenture, Upgraded to Caa3 Positive from Ca Stable (Assumed by Alpha Bank AE)

.... BACKED Subordinate Regular Bond/Debenture, Upgraded to Caa3 from C (Assumed by Alpha Bank AE)

.... BACKED Subordinate MTN, Upgraded to (P)Caa3 from (P)C

.... BACKED Senior Unsecured MTN, Upgraded to (P)Caa3 from (P)Ca

..Issuer: Alpha Group Jersey Limited

.... BACKED Senior Unsecured MTN, Upgraded to (P)Caa3 from (P)Ca

.... BACKED Subordinate MTN, Upgraded to (P)Caa3 from (P)C

..Issuer: Emporiki Group Finance Plc

.... BACKED Senior Unsecured Regular Bond/Debenture, Upgraded to Caa3 Positive from Ca Stable (Assumed by Alpha Bank AE)

..Issuer: Attica Bank S.A.

... Counterparty Risk Assessment, Upgraded to Caa2(cr) from Caa3(cr)

..Issuer: Eurobank Ergasias S.A.

.... Senior Unsecured MTN, Upgraded to (P)Caa3 from (P)Ca

.... BACKED (Government) Senior Unsecured MTN, Upgraded to (P)Caa2 from (P)Caa3

.... Subordinate MTN, Upgraded to (P)Caa3 from (P)C

.... Adjusted Baseline Credit Assessment, Upgraded to caa2 from caa3

.... Baseline Credit Assessment, Upgraded to caa2 from caa3

.... Counterparty Risk Assessment, Upgraded to Caa2(cr) from Caa3(cr)

..Issuer: ERB Hellas (Cayman Islands) Limited

.... BACKED Senior Unsecured MTN, Upgraded to (P)Caa3 from (P)Ca

.... BACKED Subordinate MTN, Upgraded to (P)Caa3 from (P)C

..Issuer: ERB Hellas PLC

.... BACKED Senior Unsecured Regular Bond/Debenture, Upgraded to Caa3 Stable from Ca Stable

.... BACKED Subordinate Regular Bond/Debenture, Upgraded to Caa3 from C

.... BACKED Senior Unsecured MTN, Upgraded to (P)Caa3 from (P)Ca

.... BACKED Subordinate MTN, Upgraded to (P)Caa3 from (P)C

..Issuer: National Bank of Greece S.A.

.... BACKED (Government) Senior Unsecured MTN, Upgraded to (P)Caa2 from (P)Caa3

.... Adjusted Baseline Credit Assessment, Upgraded to caa2 from caa3

.... Baseline Credit Assessment, Upgraded to caa2 from caa3

.... Counterparty Risk Assessment, Upgraded to Caa2(cr) from Caa3(cr)

..Issuer: NBG Finance plc

.... BACKED Senior Unsecured MTN, Upgraded to (P)Caa3 from (P)Ca

.... BACKED Subordinate MTN, Upgraded to (P)Caa3 from (P)C

..Issuer: Piraeus Bank S.A.

... Senior Unsecured MTN, Upgraded to (P)Caa3 from (P)Ca

... Subordinate MTN, Upgraded to (P)Caa3 from (P)C

GEORGIOS KARKATSIAS
PRESIDENT

03/12/18

.... Adjusted Baseline Credit Assessment, Upgraded to caa2 from caa3

.... Baseline Credit Assessment, Upgraded to caa2 from caa3

.... Counterparty Risk Assessment, Upgraded to Caa2(cr) from Caa3(cr)

..Issuer: Piraeus Group Finance Plc

.... BACKED Senior Unsecured MTN, Upgraded to (P)Caa3 from (P)Ca

.... BACKED Subordinate MTN, Upgraded to (P)Caa3 from (P)C

Affirmations:

..Issuer: Alpha Bank AE

.... LT Bank Deposits, Affirmed Caa3 Positive From Stable

.... ST Bank Deposits, Affirmed NP

....Other Short Term, Affirmed (P)NP

.... Counterparty Risk Assessment, Affirmed NP(cr)

..Issuer: Alpha Credit Group plc

.... BACKED Other Short Term, Affirmed (P)NP

.... BACKED Commercial Paper, Affirmed NP

..Issuer: Alpha Group Jersey Limited

.... BACKED Pref. Stock Non-cumulative, Affirmed C (hyb)

..Issuer: Attica Bank S.A.

.... LT Bank Deposits, Affirmed Caa3 Stable

.... ST Bank Deposits, Affirmed NP

.... Adjusted Baseline Credit Assessment, Affirmed caa3

.... Baseline Credit Assessment, Affirmed caa3

.... Counterparty Risk Assessment, Affirmed NP(cr)

..Issuer: Eurobank Ergasias S.A.

.... LT Bank Deposits, Affirmed Caa3 Stable

.... ST Bank Deposits, Affirmed NP

.... Other Short Term, Affirmed (P)NP

.... BACKED Other Short Term, Affirmed (P)NP

.... Counterparty Risk Assessment, Affirmed NP(cr)

..Issuer: ERB Hellas (Cayman Islands) Limited

.... BACKED Other Short Term, Affirmed (P)NP

..Issuer: ERB Hellas Funding Limited

.... BACKED Pref. Stock Non-cumulative, Affirmed C (hyb)

..Issuer: ERB Hellas PLC

.... BACKED Commercial Paper, Affirmed NP

.... BACKED Other Short Term, Affirmed (P)NP

..Issuer: National Bank of Greece S.A.

.... LT Bank Deposits, Affirmed Caa3 Positive From Stable

.... ST Bank Deposits, Affirmed NP

.... BACKED Other Short Term, Affirmed (P)NP

.... Counterparty Risk Assessment, Affirmed NP(cr)

..Issuer: Piraeus Bank S.A.

.... LT Bank Deposits, Affirmed Caa3 Stable

.... ST Bank Deposits, Affirmed NP

.... Counterparty Risk Assessment, Affirmed NP(cr)

..Issuer: Piraeus Group Finance Plc

.... BACKED Other Short Term, Affirmed (P)NP

.... BACKED Commercial Paper, Affirmed NP

Outlook Actions:

..Issuer: Alpha Bank AE

....Outlook, Changed To Positive From Stable

..Issuer: Attica Bank S.A.

....Outlook, Remains Stable

..Issuer: Eurobank Ergasias S.A.

....Outlook, Remains Stable

GEORGIOS KARKANIAS
PRESIDENT

03/12/18

...Issuer: National Bank of Greece S.A.

...Outlook: Changed To Positive From Stable

...Issuer: Piraeus Bank S.A.

...Outlook: Remains Stable

REGULATORY DISCLOSURES

For ratings issued on a program, series or category/class of debt, this announcement provides certain regulatory disclosures in relation to each rating of a subsequently issued bond or note of the same series or category/class of debt or pursuant to a program for which the ratings are derived exclusively from existing ratings in accordance with Moody's rating practices. For ratings issued on a support provider, this announcement provides certain regulatory disclosures in relation to the credit rating action on the support provider and in relation to each particular credit rating action for securities that derive their credit ratings from the support provider's credit rating. For provisional ratings, this announcement provides certain regulatory disclosures in relation to the provisional rating assigned, and in relation to a definitive rating that may be assigned subsequent to the final issuance of the debt, in each case where the transaction structure and terms have not changed prior to the assignment of the definitive rating in a manner that would have affected the rating. For further information please see the ratings tab on the issuer/entity page for the respective issuer on www.moodys.com.

For any affected securities or rated entities receiving direct credit support from the primary entity(ies) of this credit rating action, and whose ratings may change as a result of this credit rating action, the associated regulatory disclosures will be those of the guarantor entity. Exceptions to this approach exist for the following disclosures, if applicable to jurisdiction: Ancillary Services, Disclosure to rated entity, Disclosure from rated entity.

Regulatory disclosures contained in this press release apply to the credit rating and, if applicable, the related rating outlook or rating review.

Please see www.moodys.com for any updates on changes to the lead rating analyst and to the Moody's legal entity that has issued the rating.

Please see the ratings tab on the issuer/entity page on www.moodys.com for additional regulatory disclosures for each credit rating.

Nondas Nicolaides
VP - Senior Credit Officer
Financial Institutions Group
Moody's Investors Service Cyprus Ltd.
Porto Bello Building
1, Siafi Street, 3042 Limassol
PO Box 55209
Limassol CY 3301
Cyprus
JOURNALISTS: 852 3758 1350
Client Service: 44 20 7772 5454

Sean Marion
MD - Financial Institutions
Financial Institutions Group
JOURNALISTS: 44 20 7772 5456
Client Service: 44 20 7772 5454

Releasing Office:
Moody's Investors Service Cyprus Ltd.
Porto Bello Building
1, Siafi Street, 3042 Limassol
PO Box 55209
Limassol CY 3301
Cyprus
JOURNALISTS: 852 3758 1350
Client Service: 44 20 7772 5454

MOODY'S
INVESTORS SERVICE

© 2017 Moody's Corporation, Moody's Investors Service, Inc., Moody's Analytics, Inc. and/or their licensors and affiliates (collectively, "MOODY'S"). All rights reserved.

CREDIT RATINGS ISSUED BY MOODY'S INVESTORS SERVICE, INC. AND ITS RATINGS AFFILIATES ("MIS") ARE MOODY'S CURRENT OPINIONS OF THE RELATIVE FUTURE CREDIT RISK OF ENTITIES, CREDIT COMMITMENTS, OR DEBT OR DEBT-LIKE SECURITIES, AND MOODY'S PUBLICATIONS MAY INCLUDE MOODY'S CURRENT OPINIONS OF THE RELATIVE FUTURE CREDIT RISK OF ENTITIES, CREDIT COMMITMENTS, OR DEBT OR DEBT-LIKE SECURITIES. MOODY'S DEFINES CREDIT RISK AS THE RISK THAT AN ENTITY MAY NOT MEET ITS CONTRACTUAL, FINANCIAL OBLIGATIONS AS THEY COME DUE AND ANY ESTIMATED FINANCIAL LOSS IN THE EVENT OF DEFAULT. CREDIT RATINGS DO NOT ADDRESS ANY OTHER RISK, INCLUDING BUT NOT LIMITED TO: LIQUIDITY RISK, MARKET VALUE RISK, OR PRICE VOLATILITY. CREDIT RATINGS AND MOODY'S OPINIONS INCLUDED IN MOODY'S PUBLICATIONS ARE NOT STATEMENTS OF CURRENT OR HISTORICAL FACT. MOODY'S PUBLICATIONS MAY ALSO INCLUDE QUANTITATIVE MODEL-BASED ESTIMATES OF CREDIT RISK AND RELATED OPINIONS OR COMMENTARY PUBLISHED BY MOODY'S ANALYTICS, INC. CREDIT RATINGS AND MOODY'S PUBLICATIONS DO NOT CONSTITUTE OR PROVIDE INVESTMENT OR FINANCIAL ADVICE, AND CREDIT RATINGS AND MOODY'S PUBLICATIONS ARE NOT AND DO NOT PROVIDE RECOMMENDATIONS TO PURCHASE, SELL, OR HOLD PARTICULAR SECURITIES. NEITHER CREDIT RATINGS NOR MOODY'S PUBLICATIONS COMMENT ON THE SUITABILITY OF AN INVESTMENT FOR ANY PARTICULAR INVESTOR. MOODY'S ISSUES ITS CREDIT RATINGS AND PUBLISHES MOODY'S PUBLICATIONS WITH THE EXPECTATION AND UNDERSTANDING THAT EACH INVESTOR WILL, WITH DUE CARE, MAKE ITS OWN STUDY AND EVALUATION OF EACH SECURITY THAT IS UNDER CONSIDERATION FOR PURCHASE, HOLDING, OR SALE.

MOODY'S CREDIT RATINGS AND MOODY'S PUBLICATIONS ARE NOT INTENDED FOR USE BY RETAIL INVESTORS AND IT WOULD BE RECKLESS AND INAPPROPRIATE FOR RETAIL INVESTORS TO USE MOODY'S CREDIT RATINGS OR MOODY'S PUBLICATIONS WHEN MAKING AN INVESTMENT DECISION. IF IN DOUBT YOU SHOULD CONTACT YOUR FINANCIAL OR OTHER PROFESSIONAL ADVISER.

ALL INFORMATION CONTAINED HEREIN IS PROTECTED BY LAW, INCLUDING BUT NOT LIMITED TO, COPYRIGHT LAW, AND NONE OF SUCH INFORMATION MAY BE COPIED OR OTHERWISE REPRODUCED, REPACKAGED, FURTHER TRANSMITTED, TRANSFERRED, DISSEMINATED, REDISTRIBUTED OR RESOLD, OR STORED FOR SUBSEQUENT USE FOR ANY SUCH PURPOSE, IN WHOLE OR IN PART, IN ANY FORM OR MANNER OR BY ANY MEANS WHATSOEVER, BY ANY PERSON WITHOUT MOODY'S PRIOR WRITTEN CONSENT.

All information contained herein is obtained by MOODY'S from sources believed by it to be accurate and reliable. Because of the possibility of human or mechanical error as well as other factors, however, all information contained herein is provided "AS IS" without warranty of any kind. MOODY'S adopts all necessary measures so that the information it uses in assigning a credit rating is of sufficient quality and from sources MOODY'S considers to be reliable including, when appropriate, independent third-party sources. However, MOODY'S is not an auditor and cannot in every instance independently verify or validate information received in the rating process or in preparing the Moody's publications.

To the extent permitted by law, MOODY'S and its directors, officers, employees, agents, representatives, licensors and suppliers disclaim liability to any person or entity for any indirect, special, consequential, or incidental losses or damages whatsoever arising from or in connection with the information contained herein or the use of or inability to use any such information, even if MOODY'S or any of its directors, officers, employees, agents, representatives, licensors or suppliers is advised in advance of the possibility of such losses or damages, including but not limited to: loss of profits (including those anticipated), goodwill, or any loss or damage relating to present or prospective profits or (ii) any loss or damage arising where the relevant financial instrument is not the subject of a particular credit rating assigned by MOODY'S.

To the extent permitted by law, MOODY'S and its directors, officers, employees, agents, representatives, licensors and suppliers disclaim liability for any direct or compensatory losses or damages caused to any person or entity, including but not limited to by any negligence (but excluding fraud, wilful misconduct or any other type of liability that, for the avoidance of doubt, by law cannot be excluded) on the part of, or any contingency within or beyond the control of, MOODY'S, or any of its directors, officers, employees, agents, representatives, licensors or suppliers, arising from or in connection with the information contained herein or the use of or inability to use any such information.

GEORGIOS KARKANIAS
PRESIDENT

03/12/18

All information contained herein is obtained by MOODY'S from sources believed by it to be accurate and reliable. Because of the possibility of human or mechanical error as well as other factors, however, all information contained herein is provided "AS IS" without warranty of any kind. MOODY'S adopts all necessary measures so that the information it uses in assigning a credit rating is of sufficient quality and from sources MOODY'S considers to be reliable including, when appropriate, independent third-party sources. However, MOODY'S is not an auditor and cannot in every instance independently verify or validate information received in the rating process or in preparing its publications.

To the extent permitted by law, MOODY'S and its directors, officers, employees, agents, representatives, licensors and suppliers disclaim liability to any person or entity for any indirect, special, consequential, or incidental losses or damages whatsoever arising from or in connection with the information contained herein or the use of or inability to use any such information, even if MOODY'S or any of its directors, officers, employees, agents, representatives, licensors or suppliers is advised in advance of the possibility of such losses or damages, including but not limited to: (1) any loss of present or prospective profits or (2) any loss or damage arising where the relevant financial instrument is not the subject of a particular credit rating assigned by MOODY'S.

To the extent permitted by law, MOODY'S and its directors, officers, employees, agents, representatives, licensors and suppliers disclaim liability for any direct or compensatory losses or damages caused to any person or entity, including but not limited to by any negligence (but excluding fraud, willful misconduct or any other type of liability that, for the avoidance of doubt, by law cannot be excluded) on the part of, or any contingency within or beyond the control of, MOODY'S or any of its directors, officers, employees, agents, representatives, licensors or suppliers, arising from or in connection with the information contained herein or the use of or inability to use any such information.

NO WARRANTY EXPRESS OR IMPLIED, AS TO THE ACCURACY, TIMELINESS, COMPLETENESS, MERCHANTABILITY OR FITNESS FOR ANY PARTICULAR PURPOSE OF ANY SUCH RATING OR OTHER OPINION OR INFORMATION IS GIVEN OR MADE BY MOODY'S IN ANY FORM OR MANNER WHATSOEVER.

Moody's Investors Service, Inc., a wholly-owned credit rating agency subsidiary of Moody's Corporation ("MCO"), hereby discloses that most issuers of debt securities (including corporate and municipal bonds, debentures, notes and commercial paper) and preferred stock rated by Moody's Investors Service, Inc. have, prior to assignment of any rating, agreed to pay to Moody's Investors Service, Inc. for appraisal and rating services rendered by it fees ranging from $1,500 to approximately $2,500,000. MCO and its subsidiaries have also maintained policies and procedures to address the independence of MIS's ratings and rating processes. Information regarding certain affiliations that may exist between directors of MCO and rated entities, and between entities who hold ratings from MIS and have also publicly reported to the SEC an ownership interest in MCO of more than 5%, is posted annually at www.moodys.com under the heading "Investor Relations — Corporate Governance — Director and Shareholder Affiliation Policy."

Additional terms for Australia only: Any publication into Australia of this document is pursuant to the Australian Financial Services License of MOODY'S affiliate, Moody's Investors Service Pty Limited ABN 61 003 399 657AFSL 336969 and/or Moody's Analytics Australia Pty Ltd ABN 94 105 136 972 AFSL 383569 (as applicable). This document is intended to be provided only to "wholesale clients" within the meaning of section 761G of the Corporations Act 2001. By continuing to access this document from within Australia, you represent to MOODY'S that you are, or are accessing the document as a representative of, a "wholesale client" and that neither you nor the entity you represent will directly or indirectly disseminate this document or its contents to "retail clients" within the meaning of section 761G of the Corporations Act 2001. MOODY'S credit rating is an opinion as to the creditworthiness of a debt obligation of the issuer, not on the equity securities of the issuer or any form of security that is available to retail investors. It would be reckless and inappropriate for retail investors to use MOODY'S credit ratings or publications when making an investment decision. If in doubt you should contact your financial or other professional adviser.

Additional terms for Japan only: Moody's Japan K.K. ("MJKK") is a wholly-owned credit rating agency subsidiary of Moody's Group Japan G.K., which is wholly-owned by Moody's Overseas Holdings Inc., a wholly-owned subsidiary of MCO. Moody's Japan K.K. ("MSFJ") is a wholly-owned credit rating agency subsidiary of MJKK. MSFJ is not a Nationally Recognized Statistical Rating Organization ("NRSRO"). Therefore, credit ratings assigned by MSFJ are Non-NRSRO Credit Ratings. Non-NRSRO Credit Ratings are assigned by an entity that is not a NRSRO and, consequently, the rated obligation will not qualify for certain types of treatment under U.S. laws. MJKK and MSFJ are credit rating agencies registered with the Japan Financial Services Agency, and their registration numbers are FSA Commissioner (Ratings) No. 2 and 3 respectively.

MJKK or MSFJ (as applicable) hereby discloses that most issuers of debt securities (including corporate and municipal bonds, debentures, notes and commercial paper) and preferred stock rated by MJKK or MSFJ (as applicable) have, prior to assignment of any rating, agreed to pay to MJKK or MSFJ (as applicable) for appraisal and rating services rendered by it fees ranging from JPY200,000 to approximately JPY350,000,000.

MJKK and MSFJ also maintain policies and procedures to address Japanese regulatory requirements.

© 2017 Moody's Investors Service, Inc., Moody's Analytics, Inc. and/or their affiliates and licensors. All rights reserved.

GEORGIOS MARKAKIS
PRESIDENT

03/12/18

03/12/18

About Moody's Careers | Regulatory Affairs | Terms of Use | Contact Us

Find ratings, research, analysts and more GO

Welcome VASILIKI KARKANIA Profile

Research & Ratings Products & Solutions News & Events

My Portfolios | My Alerts My Events Log Out

Piraeus Bank S.A.

Ticker: TPEIR Moody's Org ID: 600044265 Market Segment: Financial Institutions Industry: NON-U.S. BANK
Domicile: GREECE

ANALYST

Analyst: Nondas Nicolaides

INTERACTIVE SCORECARD

Create scenarios and peer benchmarks

LONG TERM DEBT
Rating: (P)Caa3, Not on Watch
Type: Senior Unsecured MTN - Dom Curr
Date: 26 Jun 2017

LONG TERM DEPOSIT
Rating: Caa3, Not on Watch
Type: LT Bank Deposits - Fgn Curr
Outlook: Stable
Date: 26 Jun 2017

SHORT TERM DEPOSIT
Rating: NP, Not on Watch
Type: ST Bank Deposits - Fgn Curr
Date: 26 Jun 2017

COUNTERPARTY RISK ASSESSMENT
Long-term: Caa2(cr), Not on Watch
Short-term: NP(cr), Not on Watch

BASELINE CREDIT ASSESSMENT
Rating: caa2, Not on Watch
Date: 26 Jun 2017

ADJ BASELINE CREDIT ASSESSMENT
Rating: caa2, Not on Watch
Date: 26 Jun 2017

OTHER DEBTS ON WATCH?
No

Research | Ratings | Family Tree | Market Signals

Rating Class Detail | Debt List | Issuer Outlook

Scorecard | Export (CSV) | Results: 10

Class ▲	Rating	Rating Action	Date	Outlook
LT Bank Deposits (Foreign)	Caa3	RATING AFFIRMATION	26 Jun 2017	Stable
Subordinate MTN (Domestic)	(P)Caa3	Upgrade	26 Jun 2017	
Senior Unsecured MTN (Domestic)	(P)Caa3	Upgrade	26 Jun 2017	
ST Bank Deposits (Domestic)	NP	RATING AFFIRMATION	26 Jun 2017	
ST Bank Deposits (Foreign)	NP	RATING AFFIRMATION	26 Jun 2017	
Baseline Credit Assessment	caa2	Upgrade	26 Jun 2017	

Rating Class History: ST Bank Deposits (Foreign)

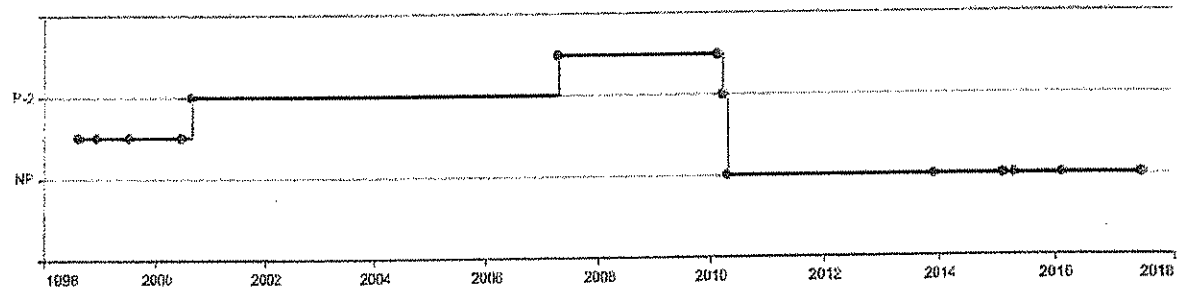

Export Results: 14

Date	Currency	Rating	Rating Action
26 Jun 2017	Foreign	NP	RATING AFFIRMATION
19 Feb 2016	Foreign	NP	RATING AFFIRMATION
30 Apr 2015	Foreign	NP	RATING AFFIRMATION
09 Feb 2015	Foreign	NP	RATING AFFIRMATION
06 Dec 2013	Foreign	NP	RATING AFFIRMATION
30 Apr 2010	Foreign	NP	Downgrade
31 Mar 2010	Foreign	P-2	Downgrade
03 Mar 2010	Foreign	P-1	On Watch - Possible Downgrade
24 Apr 2007	Foreign	P-1	Upgrade
01 Sep 2000	Foreign	P-2	Upgrade
23 Jun 2000	Foreign	P-3	On Watch - Possible Upgrade
07 Jul 1999	Foreign	P-3	CONFIRMED
30 Nov 1998	Foreign	P-3	CONFIRMED
06 Aug 1998	Foreign	P-3	New

For credit ratings that are derived exclusively from an existing credit rating of a program, series, category/class of debt, support provider or primary rated entity, or that replace a previously assigned provisional rating at the same rating level, Moody's publishes a rating announcement on that series, category/class of debt or program as a whole, on the support provider or primary rated entity, or on the provisional rating, but often does not publish a specific rating announcement on each subsequent bond or note for which the credit rating is derived from the existing credit rating. Rating announcements are usually press releases classified as Rating Actions on www.moodys.com. Please refer to the Research tab on the issuer/entity page for the rating announcement.

Moody's Integrity Hotline
EU
001-800-505-1440

Browse By
Home
Research & Ratings

Contact Us
Help & Support
Contact Us

Terms & Conditions
Terms of Use
Privacy Policy

GEORGIOS KARKANIAS PRESIDENT

03/12/18

Japan
KDDI: 00-539-111 then 888-320-1666
NTT: 0034-811-001 then 888-320-1666

Outside of the EU and Japan
1-866-330-MDYS (6397)

Products & Solutions
News & Events
Careers

Submit a Complaint

Proprietary Rights

© 2017 Moody's Investors Service, Inc., Moody's Analytics, Inc. and/or their affiliates and licensors. All rights reserved.

Regional Sites: Global

GEORGIOS KARKANIAS
PRESIDENT

03/12/18

About Moody's Careers | Regulatory Affairs | Terms of Use | Contact Us

Find ratings, research, analysts and more GO

Welcome VASILIKI KARKANIA Profile

Research & Ratings Products & Solutions News & Events My Portfolios | My Alerts My Events Log Out

Piraeus Bank S.A.

Ticker: TPEIR Moody's Org ID: 600044265 Market Segment: Financial Institutions Industry: NON-U.S. BANK
Domicile: GREECE

ANALYST

Analyst: Nondas Nicolaides

INTERACTIVE SCORECARD

Create scenarios and peer benchmarks

LONG TERM DEBT
Rating: (P)Caa3, Not on Watch
Type: Senior Unsecured MTN - Dom Curr
Date: 26 Jun 2017

LONG TERM DEPOSIT
Rating: Caa3, Not on Watch
Type: LT Bank Deposits - Fgn Curr
Outlook: Stable
Date: 26 Jun 2017

SHORT TERM DEPOSIT
Rating: NP, Not on Watch
Type: ST Bank Deposits - Fgn Curr
Date: 26 Jun 2017

COUNTERPARTY RISK ASSESSMENT
Long-term: Caa2(cr), Not on Watch
Short-term: NP(cr), Not on Watch

BASELINE CREDIT ASSESSMENT
Rating: caa2, Not on Watch
Date: 26 Jun 2017

ADJ BASELINE CREDIT ASSESSMENT
Rating: caa2, Not on Watch
Date: 26 Jun 2017

OTHER DEBTS ON WATCH?
No

Research | Ratings | Family Tree | Market Signals

Rating Class Detail | Debt List | Issuer Outlook

Scorecard | Export (CSV) | Results: 10

Class	Rating	Rating Action	Date	Outlook
Counterparty Risk Assessment	Caa2(cr)	Upgrade	26 Jun 2017	
Counterparty Risk Assessment	NP(cr)	RATING AFFIRMATION	26 Jun 2017	
LT Bank Deposits (Domestic)	Caa3	RATING AFFIRMATION	26 Jun 2017	Stable
LT Bank Deposits (Foreign)	Caa3	RATING AFFIRMATION	26 Jun 2017	Stable
Subordinate MTN (Domestic)	(P)Caa3	Upgrade	26 Jun 2017	
Senior Unsecured MTN (Domestic)	(P)Caa3	Upgrade	26 Jun 2017	

Rating Class History: LT Bank Deposits (Foreign)

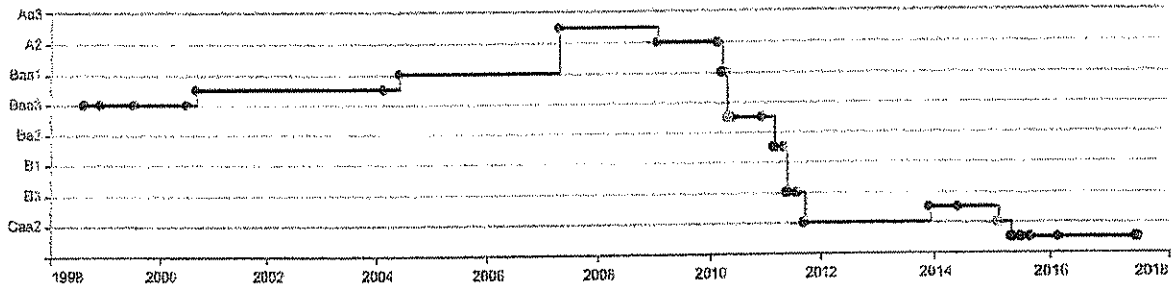

Single Rating Multiple Ratings*

*This debt class has multiple ratings. For more details, check the Debt List.

Export Results: 30

Date	Currency	Rating	Rating Action
26 Jun 2017	Foreign	Caa3	RATING AFFIRMATION
19 Feb 2016	Foreign	Caa3	RATING AFFIRMATION
04 Sep 2015	Foreign	Caa3	CONFIRMED
02 Jul 2015	Foreign	Caa3	On Watch - Possible Downgrade
30 Apr 2015	Foreign	Caa3	Downgrade
09 Feb 2015	Foreign	Caa2	On Watch - Possible Downgrade
09 Feb 2015	Foreign	Caa2	Downgrade
29 May 2014	Foreign	Caa1	RATING AFFIRMATION
06 Dec 2013	Foreign	Caa1	Upgrade
23 Sep 2011	Foreign	Caa2	Downgrade
25 Jul 2011	Foreign	B3	On Watch - Possible Downgrade
03 Jun 2011	Foreign	B3	Downgrade
10 May 2011	Foreign	Ba3	On Watch - Possible Downgrade
09 Mar 2011	Foreign	Ba3	Downgrade
17 Dec 2010	Foreign	Ba1	On Watch - Possible Downgrade
15 Jun 2010	Foreign	Ba1	CONFIRMED
30 Apr 2010	Foreign	Ba1	Downgrade
30 Apr 2010	Foreign	Ba1	On Watch - Possible Downgrade
23 Apr 2010	Foreign	Baa1	On Watch - Possible Downgrade
31 Mar 2010	Foreign	Baa1	Downgrade
03 Mar 2010	Foreign	A2	On Watch - Possible Downgrade
03 Feb 2009	Foreign	A2	Downgrade
24 Apr 2007	Foreign	A1	Upgrade

GEORGIOS KARKANTAS
PRESIDENT

03/12/18

03 Jan 2004	Foreign	Baa1	Upgrade
27 Feb 2001	Foreign	Baa2	On Watch - Possible Upgrade
01 Sep 2000	Foreign	Baa2	Upgrade
23 Jun 2000	Foreign	Baa3	On Watch - Possible Upgrade
07 Jul 1999	Foreign	Baa3	CONFIRMED
30 Nov 1998	Foreign	Baa3	CONFIRMED
06 Aug 1998	Foreign	Baa3	New

For credit ratings that are derived exclusively from an existing credit rating of a program, series, category/class of debt, support provider or primary rated entity, or that replace a previously assigned provisional rating at the same rating level, Moody's publishes a rating announcement on that series, category/class of debt or program as a whole, on the support provider or primary rated entity, or on the provisional rating, but often does not publish a specific rating announcement on each subsequent bond or note for which the credit rating is derived from the existing credit rating. Rating announcements are usually press releases classified as Rating Actions on www.moodys.com. Please refer to the Research tab on the issuer/entity page for the rating announcement.

Moody's Integrity Hotline

EU
001-800-506-1440

Japan
KDDI: 00-539-111 then 880-320-1668
NTT: 0034-811-001 then 886-320-1668

Outside of the EU and Japan
1-866-330-MDYS (6397)

Browse By
Home
Research & Ratings
Products & Solutions
News & Events
Careers

Contact Us
Help & Support
Contact Us
Submit a Complaint

Terms & Conditions
Terms of Use
Privacy Policy
Proprietary Rights

© 2017 Moody's Investors Service, Inc., Moody's Analytics, Inc. and/or their affiliates and licensors. All rights reserved.

Regional Sites: Global

GEORGIOS KARKANIAS
PRESIDENT

03/12/10

About Moody's | Careers | Regulatory Affairs | Terms of Use | Contact Us

Find ratings, research, analysts and more GO

Welcome VASILIKI KARKANIA Profile

Research & Ratings | Products & Solutions | News & Events | My Portfolios | My Alerts | My Events | Log Out

Piraeus Bank S.A.

Ticker: TPEIR Moody's Org ID: 600044265 Market Segment: Financial Institutions Industry: NON-U.S. BANK
Domicile: GREECE

ANALYST

Analyst: Nondas Nicolaides

INTERACTIVE SCORECARD

Create scenarios and peer benchmarks

LONG TERM DEBT
Rating: (P)Caa3, Not on Watch
Type: Senior Unsecured MTN - Dom Curr
Date: 26 Jun 2017

LONG TERM DEPOSIT
Rating: Caa3, Not on Watch
Type: LT Bank Deposits - Fgn Curr
Outlook: Stable
Date: 26 Jun 2017

SHORT TERM DEPOSIT
Rating: NP, Not on Watch
Type: ST Bank Deposits - Fgn Curr
Date: 26 Jun 2017

COUNTERPARTY RISK ASSESSMENT
Long-term: Caa2(cr), Not on Watch
Short-term: NP(cr), Not on Watch

BASELINE CREDIT ASSESSMENT
Rating: caa2, Not on Watch
Date: 26 Jun 2017

ADJ BASELINE CREDIT ASSESSMENT
Rating: caa2, Not on Watch
Date: 26 Jun 2017

OTHER DEBTS ON WATCH?
No

Research | Ratings | Family Tree | Market Signals

Rating Class Detail | Debt List | Issuer Outlook

Scorecard | Export (csv) | Results: 10

Class	Rating	Rating Action	Date	Outlook
LT Bank Deposits (Foreign)	Caa3	RATING AFFIRMATION	26 Jun 2017	Stable
Subordinate MTN (Domestic)	(P)Caa3	Upgrade	26 Jun 2017	
Senior Unsecured MTN (Domestic)	(P)Caa3	Upgrade	26 Jun 2017	
ST Bank Deposits (Domestic)	NP	RATING AFFIRMATION	26 Jun 2017	
ST Bank Deposits (Foreign)	NP	RATING AFFIRMATION	26 Jun 2017	
Baseline Credit Assessment	caa2	Upgrade	26 Jun 2017	

Rating Class History: ST Bank Deposits (Domestic)

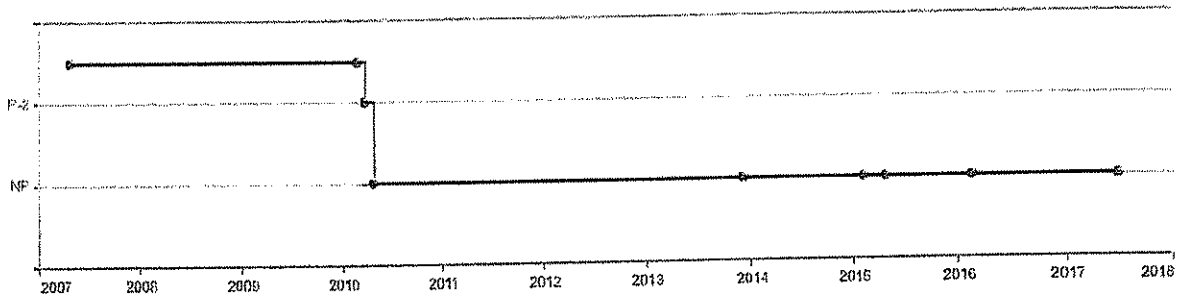

Export Results: 9

Date	Currency	Rating	Rating Action
26 Jun 2017	Domestic	NP	RATING AFFIRMATION
19 Feb 2016	Domestic	NP	RATING AFFIRMATION
30 Apr 2015	Domestic	NP	RATING AFFIRMATION
09 Feb 2015	Domestic	NP	RATING AFFIRMATION
06 Dec 2013	Domestic	NP	RATING AFFIRMATION
30 Apr 2010	Domestic	NP	Downgrade
31 Mar 2010	Domestic	P-2	Downgrade
03 Mar 2010	Domestic	P-1	On Watch - Possible Downgrade
24 Apr 2007	Domestic	P-1	New

For credit ratings that are derived exclusively from an existing credit rating of a program, series, category/class of debt, support provider or primary rated entity, or that replace a previously assigned provisional rating at the same rating level, Moody's publishes a rating announcement on that series, category/class of debt or program as a whole, on the support provider or primary rated entity, or on the provisional rating, but often does not publish a specific rating announcement on each subsequent bond or note for which the credit rating is derived from the existing credit rating. Rating announcements are usually press releases classified as Rating Actions on www.moodys.com. Please refer to the Research tab on the issuer/entity page for the rating announcement.

Moody's Integrity Hotline

EU
001-800-506-1440

Japan
KDDI: 00-539-111 then 888-320-1668
NTT: 0034-811-001 then 888-320-1668

Outside of the EU and Japan

Browse By
Home
Research & Ratings
Products & Solutions
News & Events
Careers

Contact Us
Help & Support
Contact Us
Submit a Complaint

Terms & Conditions
Terms of Use
Privacy Policy
Proprietary Rights

GEORGIOS KARKANIAS
PRESIDENT

03/12/18

About Moody's | Careers | Regulatory Affairs | Terms of Use | Contact Us

Find ratings, research, analysis and more GO

Welcome VASILIKI KARKANIA Profile

Research & Ratings | Products & Solutions | News & Events | My Portfolios | My Alerts | My Events | Log Out

Piraeus Bank S.A.

Ticker: TPEIR Moody's Org ID: 600044265 Market Segment: Financial Institutions Industry: NON-U.S. BANK
Domicile: GREECE

ANALYST

Analyst: Nondas Nicolaides

INTERACTIVE SCORECARD

Create scenarios and peer benchmarks

LONG TERM DEBT
Rating: (P)Caa3, Not on Watch
Type: Senior Unsecured MTN - Dom Curr
Date: 26 Jun 2017

LONG TERM DEPOSIT
Rating: Caa3, Not on Watch
Type: LT Bank Deposits - Fgn Curr
Outlook: Stable
Date: 26 Jun 2017

SHORT TERM DEPOSIT
Rating: NP, Not on Watch
Type: ST Bank Deposits - Fgn Curr
Date: 26 Jun 2017

COUNTERPARTY RISK ASSESSMENT
Long-term: Caa2(cr), Not on Watch
Short-term: NP(cr), Not on Watch

BASELINE CREDIT ASSESSMENT
Rating: caa2, Not on Watch
Date: 26 Jun 2017

ADJ BASELINE CREDIT ASSESSMENT
Rating: caa2, Not on Watch
Date: 26 Jun 2017

OTHER DEBTS ON WATCH?
No

Research | Ratings | Family Tree | Market Signals

Rating Class Detail | Debt List | Issuer Outlook

Scorecard | Export (csv) | Results: 10

Class	Rating	Rating Action	Date	Outlook
LT Bank Deposits (Foreign)	Caa3	RATING AFFIRMATION	26 Jun 2017	Stable
Subordinate MTN (Domestic)	(P)Caa3	Upgrade	26 Jun 2017	
Senior Unsecured MTN (Domestic)	(P)Caa3	Upgrade	26 Jun 2017	
ST Bank Deposits (Domestic)	NP	RATING AFFIRMATION	26 Jun 2017	
ST Bank Deposits (Foreign)	NP	RATING AFFIRMATION	26 Jun 2017	
Baseline Credit Assessment	caa2	Upgrade	26 Jun 2017	

Rating Class History: Adjusted Baseline Credit Assessment

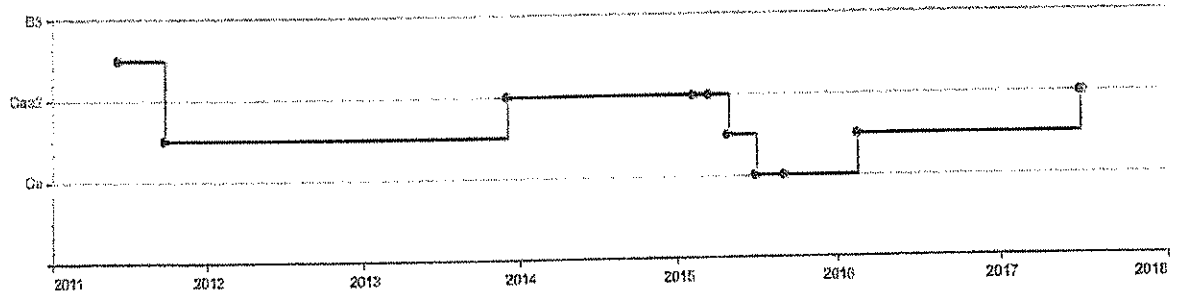

Export Results: 10

Date	Currency	Rating	Rating Action
26 Jun 2017		caa2	Upgrade
19 Feb 2016		caa3	Upgrade
04 Sep 2015		ca	RATING AFFIRMATION
02 Jul 2015		ca	Downgrade
30 Apr 2015		caa3	Downgrade
17 Mar 2015		caa2	On Watch - Possible Downgrade
09 Feb 2015		caa2	RATING AFFIRMATION
06 Dec 2013		caa2	Upgrade
23 Sep 2011		caa3	Downgrade
05 Jun 2011		caa1	New

For credit ratings that are derived exclusively from an existing credit rating of a program, series, category/class of debt, support provider or primary rated entity, or that replace a previously assigned provisional rating at the same rating level, Moody's publishes a rating announcement on that series, category/class of debt or program as a whole, on the support provider or primary rated entity, or on the provisional rating, but often does not publish a specific rating announcement on each subsequent bond or note for which the credit rating is derived from the existing credit rating. Rating announcements are usually press releases classified as Rating Actions on www.moodys.com. Please refer to the Research tab on the issuer/entity page for the rating announcement.

Moody's Integrity Hotline

EU
001-800-506-1440

Japan
KDDI: 00-539-111 then 888-320-1668
NTT: 0034-811-001 then 888-320-1668

Outside of the EU and Japan

Browse By
Home
Research & Ratings
Products & Solutions
News & Events

Contact Us
Help & Support
Contact Us
Submit a Complaint

Terms & Conditions
Terms of Use
Privacy Policy
Proprietary Rights

GEORGIOS KARKANAS
PRESIDENT

03/12/18

About Moody's Careers | Regulatory Affairs | Terms of Use | Contact Us

Find ratings, research, analysts and more GO

Welcome VASILIKI KARKANIA Profile

Research & Ratings Products & Solutions News & Events My Portfolios | My Alerts My Events Log Out

Piraeus Bank S.A.

Ticker: TPEIR Moody's Org ID: 600044265 Market Segment: Financial Institutions Industry: NON-U.S. BANK
Domicile: GREECE

ANALYST

Analyst: Nondas Nicolaides

INTERACTIVE SCOREGARD

Create scenarios and peer benchmarks

LONG TERM DEBT
Rating: (P)Caa3, Not on Watch
Type: Senior Unsecured MTN - Dom Curr
Date: 26 Jun 2017

LONG TERM DEPOSIT
Rating: Caa3, Not on Watch
Type: LT Bank Deposits - Fgn Curr
Outlook: Stable
Date: 26 Jun 2017

SHORT TERM DEPOSIT
Rating: NP, Not on Watch
Type: ST Bank Deposits - Fgn Curr
Date: 26 Jun 2017

COUNTERPARTY RISK ASSESSMENT
Long-term: Caa2(cr), Not on Watch
Short-term: NP(cr), Not on Watch

BASELINE CREDIT ASSESSMENT
Rating: caa2, Not on Watch
Date: 26 Jun 2017

ADJ BASELINE CREDIT ASSESSMENT
Rating: caa2, Not on Watch
Date: 26 Jun 2017

OTHER DEBTS ON WATCH?
No

Research | Ratings | Family Tree | Market Signals

Rating Class Detail | Debt List | Issuer Outlook

Scorecard | Export (CSV) | Results: 10

Class	Rating	Rating Action	Date	Outlook
LT Bank Deposits (Foreign)	Caa3	RATING AFFIRMATION	26 Jun 2017	Stable
Subordinate MTN (Domestic)	(P)Caa3	Upgrade	26 Jun 2017	
Senior Unsecured MTN (Domestic)	(P)Caa3	Upgrade	26 Jun 2017	
ST Bank Deposits (Domestic)	NP	RATING AFFIRMATION	26 Jun 2017	
ST Bank Deposits (Foreign)	NP	RATING AFFIRMATION	26 Jun 2017	
Baseline Credit Assessment	caa2	Upgrade	26 Jun 2017	

Rating Class History: Baseline Credit Assessment

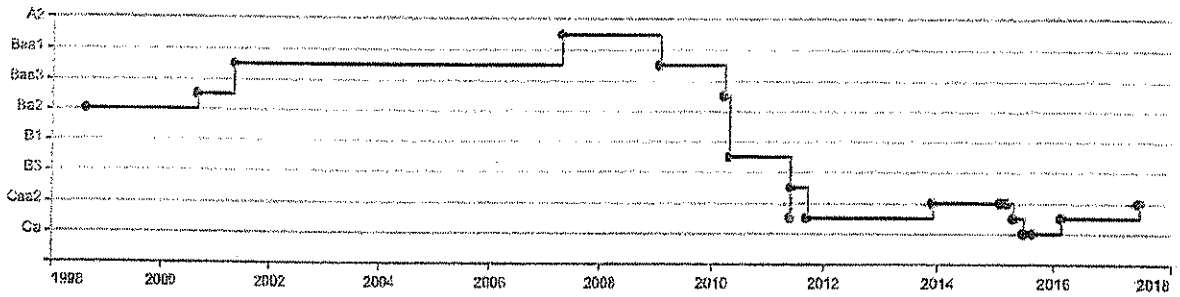

Export Results: 18

Date	Currency	Rating	Rating Action
26 Jun 2017		caa2	Upgrade
19 Feb 2016		caa3	Upgrade
04 Sep 2015		ca	RATING AFFIRMATION
02 Jul 2015		ca	Downgrade
30 Apr 2015		caa3	Downgrade
17 Mar 2015		caa2	On Watch - Possible Downgrade
09 Feb 2015		caa2	RATING AFFIRMATION
06 Dec 2013		caa2	Upgrade
23 Sep 2011		caa3	Downgrade
05 Jun 2011		caa1	Upgrade
03 Jun 2011		caa3	Downgrade
30 Apr 2010		b2	Downgrade
31 Mar 2010		ba1	Downgrade
03 Feb 2009		baa2	Downgrade
24 Apr 2007		a3	Upgrade
04 May 2001		baa2	Upgrade
01 Sep 2000		ba1	Upgrade
06 Aug 1998		ba2	New

For credit ratings that are derived exclusively from an existing credit rating of a program, series, category/class of debt, support provider or primary rated entity, or that replace a previously assigned provisional rating at the same rating level, Moody's publishes a rating announcement on that series, category/class of debt or program as a whole, on the support provider or primary rated entity, or on the provisional rating, but often does not publish a specific rating announcement on each subsequent bond or note for which the credit rating is derived from the existing credit rating. Rating announcements are usually press releases classified as Rating Actions on www.moodys.com. Please refer to the Research tab on the issuer/entity page for the rating announcement.

GEORGIOS KARKASIAS
PRESIDENT

9

03/12/18

Moody's Integrity Hotline

EU
001-800-505-4440

Japan
KDDI: 00-539-111 then 888-320-1668
NTT: 0034-811-001 then 888-320-1668

Outside of the EU and Japan
1-866-330-MDYS (6397)

Browse By
Home
Research & Ratings
Products & Solutions
News & Events
Careers

Contact Us
Help & Support
Contact Us
Submit a Complaint

Terms & Conditions
Terms of Use
Privacy Policy
Proprietary Rights

© 2017 Moody's Investors Service, Inc., Moody's Analytics, Inc. and/or their affiliates and licensors. All rights reserved.

Regional Sites: Global

GEORGIOS [illegible]
PRESIDENT

03/12/18

About Moody's Careers | Regulatory Affairs | Terms of Use | Contact Us

Find ratings, research, analysts and more GO

Welcome VASILIKI KARKANIA Profile

Research & Ratings Products & Solutions News & Events My Portfolios | My Alerts My Events Log Out

Piraeus Bank S.A.

Ticker: TPEIR Moody's Org ID: 600044265 Market Segment: Financial Institutions Industry: NON-U.S. BANK
Domicile: GREECE

ANALYST

Analyst: Nondas Nicolaides

INTERACTIVE SCORECARD

Create scenarios and peer benchmarks

LONG TERM DEBT
Rating: (P)Caa3, Not on Watch
Type: Senior Unsecured MTN - Dom Curr
Date: 26 Jun 2017

LONG TERM DEPOSIT
Rating: Caa3, Not on Watch
Type: LT Bank Deposits - Fgn Curr
Outlook: Stable
Date: 26 Jun 2017

SHORT TERM DEPOSIT
Rating: NP, Not on Watch
Type: ST Bank Deposits - Fgn Curr
Date: 26 Jun 2017

COUNTERPARTY RISK ASSESSMENT
Long-term: Caa2(cr), Not on Watch
Short-term: NP(cr), Not on Watch

BASELINE CREDIT ASSESSMENT
Rating: caa2, Not on Watch
Date: 26 Jun 2017

ADJ BASELINE CREDIT ASSESSMENT
Rating: caa2, Not on Watch
Date: 26 Jun 2017

OTHER DEBTS ON WATCH?
No

Research | Ratings | Family Tree | Market Signals

Rating Class Detail | Debt List | Issuer Outlook

Scorecard | Export (CSV) | Results: 10

Class	Rating	Rating Action	Date	Outlook
Counterparty Risk Assessment	Caa2(cr)	Upgrade	26 Jun 2017	
Counterparty Risk Assessment	NP(cr)	RATING AFFIRMATION	26 Jun 2017	
LT Bank Deposits (Domestic)	Caa3	RATING AFFIRMATION	26 Jun 2017	Stable
LT Bank Deposits (Foreign)	Caa3	RATING AFFIRMATION	26 Jun 2017	Stable
Subordinate MTN (Domestic)	(P)Caa3	Upgrade	26 Jun 2017	
Senior Unsecured MTN (Domestic)	(P)Caa3	Upgrade	26 Jun 2017	

Rating Class History: LT Bank Deposits (Domestic)

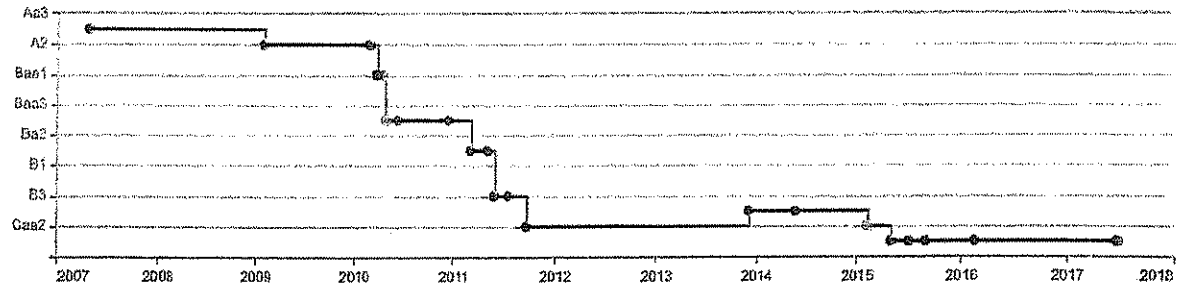

Single Rating Multiple Ratings*

*This debt class has multiple ratings. For more details, check the Debt List.

Export Results: 23

Date	Currency	Rating	Rating Action
26 Jun 2017	Domestic	Caa3	RATING AFFIRMATION
19 Feb 2016	Domestic	Caa3	RATING AFFIRMATION
04 Sep 2015	Domestic	Caa2	CONFIRMED
02 Jul 2015	Domestic	Caa3	On Watch - Possible Downgrade
30 Apr 2015	Domestic	Caa3	Downgrade
09 Feb 2015	Domestic	Caa2	On Watch - Possible Downgrade
09 Feb 2015	Domestic	Caa2	Downgrade
29 May 2014	Domestic	Caa1	RATING AFFIRMATION
06 Dec 2013	Domestic	Caa1	Upgrade
23 Sep 2011	Domestic	Caa2	Downgrade
25 Jul 2011	Domestic	B3	On Watch - Possible Downgrade
03 Jun 2011	Domestic	B3	Downgrade
10 May 2011	Domestic	Ba3	On Watch - Possible Downgrade
09 Mar 2011	Domestic	Ba3	Downgrade
17 Dec 2010	Domestic	Ba1	On Watch - Possible Downgrade
15 Jun 2010	Domestic	Ba1	CONFIRMED
30 Apr 2010	Domestic	Ba1	Downgrade
30 Apr 2010	Domestic	Ba1	On Watch - Possible Downgrade
23 Apr 2010	Domestic	Baa1	On Watch - Possible Downgrade
31 Mar 2010	Domestic	Baa1	Downgrade
03 Mar 2010	Domestic	A2	On Watch - Possible Downgrade
03 Feb 2009	Domestic	A2	Downgrade
24 Apr 2007	Domestic	A1	New

GEORGIOS KARKANTAS
PRESIDENT

03/12/18

For credit ratings that are derived exclusively from an existing credit rating of a program, series, category/class of debt, support provider or primary rated entity, or that replace a previously assigned provisional rating at the same rating level, Moody's publishes a rating announcement on that series, category/class of debt or program as a whole, on the support provider or primary rated entity, or on the provisional rating, but often does not publish a specific rating announcement on each subsequent bond or note for which the credit rating is derived from the existing credit rating. Rating announcements are usually press releases classified as Rating Actions on www.moodys.com. Please refer to the Research tab on the issuer/entity page for the rating announcement.

Moody's Integrity Hotline

EU
001-800-506-1440

Japan
KDDI: 00-539-111 then 888-320-1668
NTT: 0034-811-001 then 886-320-1668

Outside of the EU and Japan
1-866-330-MDYS (6397)

Browse By
Home
Research & Ratings
Products & Solutions
News & Events
Careers

Contact Us
Help & Support
Contact Us
Submit a Complaint

Terms & Conditions
Terms of Use
Privacy Policy
Proprietary Rights

© 2017 Moody's Investors Service, Inc., Moody's Analytics, Inc. and/or their affiliates and licensors. All rights reserved.

Regional Sites: Global

GEORGIOS KARKANIAS
PRESIDENT

9
03/12/18

KARKANIAS
ENVIRONMENTAL TECHNOLOGY S.A.

Folder II – TECHNICAL OFFER

Contents

	Document	Section in Folder
	Description of the essential technical and performance characteristic of the facilities	**1**
	Analytical list with description of electromechanical equipment	**2**
	Proposed facilities list	**3**
	Process design	**4**
	Drawings	**5**

GEORGIOS KARKANIAS
PRESIDENT

3/12/18

3|12|18

Technical Offer

Description of the essential technical and performance characteristic of the facilities

KARKANIAS ENVIRONMENTAL TECHNOLOGY S.A.
INDUSTRIAL AREA OF LARISA - GREECE
POSTAL CODE 41004, BOX 3053
TEL.: +30 2410 541386 - FAX: +30 2410 541354
Email: info@karkanias.gr
TAX NUMBER: 095244711
REGISTRATION NUMBER: 48779/31/B/01/12

GEORGIOS KARKANIAS
PRESIDENT

3/12/18

CONTENT

1. GENERAL INFORMATION 1
1.1 Basic information on the construction 1
1.2 Proposed scope of works and expected results 1
1.2.1 Wastewater Production 1
1.2.1.1 Wastewater Volume 2
1.2.1.2 Raw Wastewater Quality 2
1.2.1.3 Treated Wastewater Quality 3
2. DETAILS OF ALL WORKS TO ACHIEVE COMPLETION 4
2.1 Technological part 4
2.1.1 Wastewater Treatment Process 6
2.1.1.1 Structures on the sewer network 6
2.1.1.2 Mechanical wastewater pretreatment unit 9
2.1.1.3 Biological treatment process 9
2.1.1.4 Filtration unit 14
2.1.1.5 UV disinfection of outflow – Measuring effluent flume 15
2.1.1.6 Sludge Treatment Units 16
2.1.1.7 Common requirements of WWTP 19
2.1.1.8 Blower house 21
2.1.1.9 Operation building 21
2.1.1.10 Garages 22

GEORGIOS KARKANIAS
PRESIDENT
3/12/18

1. GENERAL INFORMATION

1.1 Basic information on the construction

The purpose of the "Danilovgrad Municipal Infrastructure Project, Construction of WWTP" project is to deal with the treatment of sewage through the construction of a new wastewater treatment plant.

This project is to be followed by the "Danilovgrad Municipal Infrastructure Project, Rehabilitation of sewerage" project dealing with the collection of sewage wastewaters in the town of Danilovgrad through the construction of a separate sanitary sewerage.

The main watercourse draining the Danilovgrad area is the Zeta river.

The implementation of the projects will ensure an improved water quality in the Zeta river into which wastewaters are drained at present without any adequate treatment process. The wastewater will be brought into the new WWTP. The projects concept is based on the intention to protect the watercourse maximally from being polluted.

The designed activity realization will form conditions for the infrastructure completion and will promote the development of the area concerned.

1.2 Proposed scope of works and expected results

The Contractor elaborates the documentation of the WWTP for the capacity of 12,000 PE with construction divided into two stages, and will realize the WWTP for the capacity of 6,000 PE with individual structures realized in a scope specified in relevant descriptions of these structures.

1.2.1 Wastewater Production

The existing sewerage system will be partially replaced by sewers built as separate sewage system. Wastewater treatment plant is proposed for following capacity:

Stage 1 - design capacity	6 000 population equivalent
Stage 2 - distant future	12 000 population equivalent

A vast majority of the wastewater collected from Danilovgrad is formed by sewage water, produced mainly in households.

GEORGIOS KARKANIAS
PRESIDENT

3/12/18

1.2.1.1 Wastewater Volume

The determination of the volume of wastewater is based on the expected wastewater production of 150 L/capita.day. The wastewater flow rates, specified by the client, include groundwater inflow/infiltration. Design parameters is found in the following table:

Table 1: Wastewater Production

	Design capacity		
	l/s	m^3/h	m^3/d
Average Dry Weather Daily Flow - ADF	10.4	37.4	898.6
Maximum Dry Weather Daily Flow - MDF	14.6	52.6	1,261.4
Maximum Dry Weather Hourly Flow - MHF	21.9	78.8	-
Wet Weather Flow - WWF	26.3	94.6	-

All the design flow will be doubled for WWTP capacity of 12,000 PE.

Internal recycles will be less than 1% of WWF.

1.2.1.2 Raw Wastewater Quality

The wastewater produced in the town of Danilovgrad has the characteristics of sewage water. The specification of its quality is therefore based on the Specific Contamination (SC), produced by the town's inhabitants, as summarized in Table 2.

Table 2: Specific pollution per capita

BOD_5	60	g/capita.day
COD	120	g/capita.day
SS	70	g/capita.day
TNK	11	g/capita.day
P	1.8	g/capita.day

Table 3: Design capacity - average annual value

BOD_5	360	kg/day	400.6	mg/l
COD	720	kg/day	801.3	mg/l
SS	420	kg/day	467.4	mg/l
TNK	66	kg/day	73.5	mg/l
P	10.8	kg/day	12.0	mg/l

All the design balance of pollution will be doubled for WWTP capacity of 12,000 PE.

3/12/18
GEORGIOS KARKANIAS
PRESIDENT

At the time of startup of WWTP will be connected pollution from about 3,900 inhabitants. The amount of pollution and wastewater flow will be as follows (the amount of storm water flow is not changed).

Table 4: Wastewater production- state at start up

	l/s	m^3/h	m^3/d
Average Dry Weather Daily Flow - ADF	6.8	24.3	584.1
Maximum Dry Weather Daily Flow - MDF	9.5	34.2	819.9
Maximum Dry Weather Hourly Flow - MHF	14.2	51.2	-
Wet Weather Flow - WWF	26.3	94.6	-

Expected minimum flow of waste water during startup will be about 4.1 l/s.

Table 5: Raw wastewater pollution - state at start up

BOD_5	234	kg/day	400.6	mg/l
COD	468	kg/day	801.3	mg/l
SS	273	kg/day	467.4	mg/l
TNK	42.9	kg/day	73.5	mg/l
P	7.02	kg/day	12.0	mg/l

1.2.1.3 Treated Wastewater Quality

River Zeta is recipient of treated wastewater. The river is located in sensitive area. Wastewater treatment process includes nutrient removal therefore. According the Law on Classification and Categoration of Surface and Ground water of Montenegro (in force since 1996) river Zeta water is classified along whole watercourse to the classes A1. S. I. Class A1 water can be used in its' natural state after disinfection for drinking purposes. class S water can be used for fish breeding and class I designate water suitable for contact recreation (bathing). In line with EU Directives secondary and tertiary treatment at WWTP Danilovgrad will achieve the following effluent quality:

Table 6: Effluent quality requirements

Parameter		
BOD_5	25	mg/l
COD	125	mg/l
SS	35	mg/l
Total Nitrogen (annual average value)	15	mg/l
Total Phosphorous (annual average value)	2	mg/l

UV disinfection of effluent is required in order to ensure the quality of receiving water (Zeta River) as a drinking water class A1.

GEORGIOS KARKANIAS
PRESIDENT

3/12/8

2. DETAILS OF ALL WORKS TO ACHIEVE COMPLETION

2.1 Technological part

The Works will comprise designing, construction and commissioning of the WWTP Danilovgrad, tertiary treatment and sludge management. The WWTP Danilovgrad is designed for a capacity of 12000 PE and shall be built for 6,000PE in the Stage 1.

The design of the WWTP spatial arrangement had taken into consideration the territorial (areal) reserve for the future extension of the WWTP for the capacity of 18,000 PE (Stage 3).

The WWTP is designed as unattended with fully automatic operation.

List of buildings and facilities - for the design and erection of all necessary works

- Connection on the inlet main collector for the capacity of 130 l/s on the site of the WWTP
- Facility for the coarse screen for the capacity of 130 l/s,
- Facility for the inlet pumping station for the capacity of min26,3 l/s,
- Facility for the fine screen, grease and grit chamber (compact mechanical pretreatment unit) for the capacity of min26,3 l/s,
- Connection between the compact mechanical pretreatment unit and the biological unit for capacity of min26,3 l/s,
- Biological unit for the capacity of 6,000 PE,
- Discharge pipeline from the secondary settling tank to the filtration unit for the capacity of min26,3 l/s
- Shaft and facility for the service water preparation
- Filtration of treated wastewater
- Disinfection of treated wastewater
- Effluent measuring channel for the quality of treated wastewater and capacity of min26,3 l/s
- Return sludge and Excess sludge pumping station for 6,000 PE,
- Facility for sludge thickening for 6,000 PE,
- Sludge storage (holding) tank for 6,000 PE,
- Facility for sludge dewatering for 6,000 PE,
- Facility for septic sludge (septage) delivered by trucks, receiving tank
- Administration building with laboratory, workshop and garage,
- Internal sewage system with sewage and internal recycles from sludge treatment,

3/12/18
GEORGIOS KARKANIAS
PRESIDENT

- Rainwater will be introduced into the drainage
- Transformer station for the WWTP capacity 12,000 PE,
- Power generator for 6,000 PE.

- Landscaping works
- Access road
- Construction related to utilities connections (electric power and water supply and others).
- Trial operation of the WWTP in duration of 365 days.
- Sludge disposal in the Trial operation period will be done by Employer.
- Obtainment of an Operation permit including all the required consents and documentation (such as: expert report on explosion safety, summary of fire safety procedures, production of project of maintenance of facility).
- Training of the WWTP staff.

The scope of Works also covers delivery of Plant, test on Completion including operational trials, Tests after Completion, remedying of any defects in the Works and training of future (Employer's) End Recipient's WWTP staff. All activities necessary to be performed in order to put the Works into normal operation and to deliver them to the Employer shall also be carried out. The Conditions of Contract, Price Schedule, such as included in this Tender Dossier, shall be read in conjunction with the Employer's requirements. Matters referred to, shown or described in any of the formers are not necessarily repeated in the latter.

3/12/18

GEORGIOS KARKANIAS
PRESIDENT

2.1.1 Wastewater Treatment Process

The design of the wastewater treatment plant for the town of Danilovgrad is based on the nitrification and denitrification treatment processes with chemical precipitation of phosphorus. Wastewater treatment technology is designed as circulating activated sludge process with pre-denitrification tank.

2.1.1.1 Structures on the sewer network

The hydraulic sewer capacity is about 130 l/s. The sewerage network contains the following constructions:

- connecting shaft with gravel traps and sewage overflow (inlet and overflow manhole)
- septage unit
- automatically cleaned coarse screen, sewage pumping station and sewage overflow

Gravel traps and coarse screen serve as mechanical protection of pumping station. Their hydraulic capacity is maximal sewer flow capacity. Storm water flow rate greater than 26.3 l/s overflowed from the overflow chamber into the river. Flow rate of 26.3 l/s is a maximal hydraulic capacity of WWTP.

Connection to the main collector

Connection sewer system and wastewater treatment plant will be using connecting shafts. Trunk sewer ends in the object of overflow/relief and switching-off chambers in front of the wastewater treatment plant.

This object fulfills two basic functions:

- Control of inflowing quantity of wastewater for the value Qmax = 130 l/s. In the gate chamber a motorized penstock is fitted destined for controlling inflowing quantity of wastewater.
- This motorized penstock warrants inflow controlling and/or full closing the wastewater treatment plant inlet (in case of a heavy failure – e.g. electric power drop-out).

As for spatial arrangement of the inlet / overflow manhole this one is divided into four parts – to the inlet chamber, to the gravel traps chamber, to the overflow/relief chamber and to the penstock/closing chamber. Gravel traps is mechanical protection of equipment against rough substances heavier than water. Gravel and other rough impurities flowing in together with influent wastewater will be trapped there. Extraction of trapped material will be realized with the aid of a lifting device. Hydraulic capacity of gravel traps is 130 l/s. Overflow/relief chamber has been resolved as an overflow/relief chamber with a front over fall. Penstock/closing chamber is provided with a motorized penstock for controlling inflowing quantity of wastewater. Overflow wastewater is introduced by sewerage systems into the river. This system also creates a bypass sewer of WWTP.

The structure includes a scum diaphragm, in conjunction with overflow weir, to prevent coarse impurities, floating substances, oil substances and fats from entering the river.

Furthermore, it is foreseen an automatic station for receiving samples of untreated wastewater.

GEORGIOS KARKANIAS
PRESIDENT
3/12/18

The structure includes a draining area of the containers. The container removal is carried out with a truck.

One flow measuring structure is designed to be installed. One measuring flume will be installed on the storm-water overflow behind the overflow chamber. Parshall measuring flume is used due to their reliability and a wide range of flow rate.

The structure is designed as an open, reinforced-concrete flume made of water-resistance concrete, in which the measuring profile will be installed.

Receipt of content of cesspools and septic tanks

The structure serves for collecting septage from septic trucks collected from cesspools and septic tanks.

Analytically, inside the facility will be installed a gravel trap, a compact fine screen unit for septage receiving and a septic reception tank. The structure includes a water-resistant, covered reception (collection) tank of required capacity. The tank is filled only through an automatic station for receiving septage, appropriately equipped with a electromotor knife gate valve, a flow meter, a pH and temperature measurement probe and a conductivity meter on the inlet pipeline. The tank includes a submersible mixer for homogenizing the content, valve for discharging the tank content by gravity and ultrasonic level meter.

The contents of the septic reception tank are dosed via submersible pumps ahead of coarse screen. Dosage is blocked during storm water flow of wastewater.

Furthermore, it is foreseen an automatic station for receiving samples of septage.

The structure is designed with parameters sufficient also for the planned scope of Stage 2.

The automatic station for receiving septage and the automatic station for receiving samples of septage will be installed into an insulated and heated building.

Automatic coarse screen and pumping station

Automatic coarse screen is designed for 100 % storm water flow (130 l/s). Screenings from the automatic cleaned coarse screen fall into the screw conveyor and finally moved into the container. Ultrasonic differential level meter located ahead and behind of automatic screen controls screen operation. There is two lines, one with mechanically operated coarse screen with 50mm gaps and one with a standby manually operated coarse screen with 50mm gaps.

The structure includes a draining area of the container. The container removal is carried out with a truck.

The pumping station capacity and mechanical pre-treatment facility of WWTP is designed according to wastewater production rate.

The pumping station is resolved as a basement object designed for a slight equalizing of the sewage and for the pumping of the sewage through the mechanical pre-treatment into the biological part of the treatment plant. The pumping station will be equipped with submersible pumps. The number and the capacity of pumps are selected in order to achieve a uniform supply to the treatment plant. The pumps will be operated automatically in dependence on the water level in the pumping sump. Level inside of the pumping station is

3/12/18

GEORGIOS KARKANIAS
PRESIDENT

measured with the ultrasonic level meter. All pumps have frequency inverters for flow control. Pumping station maximal hydraulic capacity is 28.56 l/s for 1st stage. Storm water flow over 26.3 l/s overflows into the river from pumping station. On the pressure pipeline an electromagnetic inductive flow meter will be installed.

Pumping station is structurally designed for a wastewater flow corresponding of 12,000 PE flow (2nd stage). However the pumps will be mounted only on the flow rate max 28,56 l/s which correspond to rainfall flow rate of 6,000 PE.

The wastewater pumped shall be distributed to two separate lines for Stage 2.

Further, the structure includes a scum diaphragm to prevent coarse impurities, floating substances, oil substances and fats from entering the river.

Internal recycles will be less than 1% of WWF.

Table 7: Required pumping station capacity

	Start-up capacity	Design capacity
	l/s	l/s
Average Dry Weather Daily Flow - ADF	6.8	10.4
Maximum Dry Weather Daily Flow - MDF	9.5	14.6
Maximum Dry Weather Hourly Flow - MHF	14.2	21.9
Wet Weather Flow - WWF	26.3	26.3

Table 8: Technical data of pumping station (1st Stage)

Parameter	Unit	Value
Number of pumps (working + standby))	pcs	2+1
Operating range of the pump	%	50 - 100

3/12/18

GEORGIOS KARKANIAS
PRESIDENT

2.1.1.2 Mechanical wastewater pretreatment unit

Complete wastewater pre-treatment prevents operational problems, such as blockages, wear and silting.

A double-line arrangement of the structure is designed; one separate unit is installed within Stage 1 (6,000 PE). Another, identical, unit shall be installed within Stage 2. A compact mechanical pretreatment unit is designed for each line.

Complete compact mechanical pretreatment unit consists of fine screen with screenings treatment, grit separation and classification with aeration and separation and removal of fat and grease. Hydraulic capacity of the compact mechanical pretreatment unit is 30 l/s (maximum design capacity). Slot of screen is 6 mm. The screen will be equipped to press of screenings. Analytically, screenings will be collected and removed, together with fats by a conveyor with an integrated press. The sand trap will achieve the separation of sand from the wastewater. Organic impurities will be washed from trapped sand. The sand will be removed by a conveyor to a separate container. Air will be supplied by an integrated compressor. The unit operation will be fully automatic, with personnel required only for occasional emptying of the container. Trouble-free handling of the container is ensured. The containers removal shall be carried out with a truck.

The structure will include a valve on the bypass piping of compact mechanical pretreatment unit.

The structure is designed as a reinforced-concrete monolithic slab (foundation) made of water-resistant concrete. The hard-surface area for the containers will be made of concrete, drained to the internal sewage system.

2.1.1.3 Biological treatment process

Wastewater from mechanical pre-treatment will be flowed into the biological step of WWTP. Wastewater treatment technology is designed as circulating activated sludge process.

This process is based on a biological principle as low-load activation with aerobic sludge stabilization. The activation tanks is divided into a predenitrification (anoxic) zone and circulating activated sludge process with anoxic and aeration zones.

In the predenitrification zone the raw sewage is mixed with recirculated sludge from the bottom of secondary sedimentation tank resulting in the formation of activated mixture. Submersion horizontal agitator is used for stirring the activated sludge in the predenitrification.

Circulated activated sludge tank is equipped with submerged agitators too. The nitrification sections will be aerated by fine-bubble aeration elements. From the nitrification sections the activation mixture flows into the secondary sedimentation tank.

GEORGIOS KARKANIAS
PRESIDENT
3/12/18

Flow distribution Chamber I

Structure for equal distribution of wastewater to three separate lines of the biological treatment is designed. The wastewater is distributed by gravity, with overflow including adjustable overflow weir. The structure will include valve. Emergency bypass of the downstream tanks is provided as well.

Predenitrification tank

Predenitrification tank ensures denitrification of oxidized forms of nitrogen contained in the return sludge. Two separate, identical denitrification tanks is designed for Stage 2. One tank will be realized within Stage 1.

The predenitrification tank inlet are mechanically pre-treated wastewater and return sludge from the final settling tank. Predenitrification tank operates in anoxic conditions and is not aerated. It is only mechanically mixed. Minimal hydraulic contact time is higher than 1,9 hour during maximal flow rate and maximal flow of return sludge. An overflow crest is designed on the runoff, allowing even discharge of wastewater to the activated sludge tank.

Circulating activated sludge tank

The circulating activated sludge tank is operated with the presence of oxic and anoxic zones. This type of aeration tank is very suitable for fluctuating wastewater pollution, respectively with gradually increasing quantities of wastewater pollution.

Two separate, identical circulating activated sludge tanks is designed for Stage 2. One tank will be realized within Stage 1.

The tank is mechanically stirred and aerated, and its construction allows the installation, operation, and maintenance of machinery required by the technology used and the manufacturer. The tank includes a denitrification section, stirred mechanically with submersible mixers, and a nitrification section, aerated with aeration elements (membrane diffusers). The shape of the tank and inner partition walls is adapted to the most favorable hydraulic water flow. A runoff manhole with an overflow weir is designed, allowing even discharge of the activated mixture to the final settling tank.

In any case the total sludge age is higher than 20 days.

Because of simultaneous precipitation of phosphorus, the chemical sludge production incorporated into activated sludge production.

GEORGIOS KARKANIAS
PRESIDENT

3/12/18

Table 9: Activated Sludge Tanks

		Start up	Design capacity
Predenitrification tank			
Number of tanks (1st Stage)	pcs.	1	1
Volume of one tank	m^3	363	363
Circulating activated sludge tank			
Number of tanks (1st Stage)	pcs.	1	1
Volume of one tank	m^3	1269.8	1269.8
Standard oxygen transfer rate (SOTR)	kg/d	1719.4	1490.9

Table 10: Technical data of aeration system

Parameter	Unit	Value
Number of blowers	pcs	1+1
Capacity of blower	Nm^3/hour	776

Flow distribution Chamber II

Structure for equal distribution of wastewater to three separate lines of the biological treatment is designed. The wastewater is distributed by gravity, with overflow including adjustable overflow weir. The structure will include valve. Emergency bypass of the downstream tanks is provided as well.

Final Settling Tanks

The activated mixture from the circulating activated sludge tank will flow into the final settling tank, where the separation of sludge from the treated wastewater will take place. After filtration and disinfection the wastewater will then be discharged into the recipient – Zeta River. Part of the settled activated sludge will be returned into the biological treatment facility and the remainder pumped to subsequent treatment as part of the sludge management process.

Two separate, identical final settling tanks is designed for Stage 2. One tank will be realized within Stage 1.

A circular tank is designed for the activated sludge separation. The activated mixture will flow into the center of the tank through a flow distribution structure (influent well). Settled water will be collected in a discharge channel via an adjustable overflow weir (V-notch), located around the tank perimeter. Then it will run off through the window of the runoff shaft to the filtration unit. The tank construction allows the installation of machinery for automatic raking of the bottom and the water surface. Specifically, the removal of the settled sludge and scum is done with rotated radial bridge with bottom and surface scrapers.

3/12/18

GEORGIOS KARKANIAS
PRESIDENT

The collection of floating impurities is provided via skimmer. Settled sludge is collected in the central tank from where it is removed through piping to the sludge pumping station.

The circulated final settling tank meets the design parameters below:

SS loading per surface area at MHF	less than 6,0 kg/m2.hour
Sludge index	not lower than 150 ml/g
Minimal return sludge flow rate	>16 l/s

Table 11: Secondary Settling Tank dimensions

		Start up	Design capacity
Number of tanks (1st Stage)	pcs.	1	1
Tank diameter	m	14	14
Liquid depth of tank	m	4	4

Return activated sludge and excess sludge pumping station

A structure containing pumps for return and excess activated sludge is designed. The structure is located close to the final settling tank. One pumping station is designed to be used for each final settling tank. Structurally, the structure is built within Stage 2, technologically only for Stage 1.

Submersible pumps of return and excess activated sludge will be installed in the sumps. Thus, each sump will contain two return sludge pumps and two excess sludge pumps.

Return activated sludge pumps are two, of which one is operating and one is on standby and they will operate in alternate mode in order to achieve equal number of operating hours. On the pressure pipeline an electromagnetic inductive flow meter will be installed. Both pumps will have frequency inverters. Level inside of the pumping station is measured with one ultrasonic level meter.

Table 12: Technical data for the return activated sludge pumps

Parameter	unit	value
Number of pumps (working + standby) 1st stage	pcs	1+1
Maximum flow of pump	l/s	27,72
Operating range of the pump	%	50 - 100

3/12/18

GEORGIOS KARKANIAS PRESIDENT

Excess sludge pumps are two, of which one is operating and one is on standby and they will operate in alternate mode in order to achieve equal number of operating hours. On the pressure pipeline an electromagnetic inductive flow meter will be installed. Both pumps will have frequency inverters. Level inside of the pumping station is measured with the above mentioned ultrasonic level meter.

Table 13: Technical data for the excess sludge pumps

Parameter	unit	value
Number of pumps (working + standby) 1st stage	pcs	1+1
Maximum flow of pump	l/s	7,25
Operating range of the pump	%	50 - 100

Chemical Phosphorus Precipitation

Chemical phosphorus precipitation unit is added to the treatment process to achieve required outflow concentration. The precipitation is achieved through the addition of ferric chloride sulphate into outlet manhole of circulating activated sludge tank (prior to final settling tank inlet). The phosphorus precipitation will be simultaneous. Ferric chloride sulphate (41% solution) will be dosed from one reservoir. Three membrane pumps is used to dosing solution of ferric chloride sulphate, one for 1st stage, one for 2nd stage and one standby.

The precipitant reservoir is placed on a foundation slab, under the building roof. The area under the reservoir is provided with a leakage basin. Reservoir is made with double walls due to safety reasons, with a capacity sufficient for at least 30 days of operation and equipped with continuous level measurements, three level switches (minimum, maximum, alarm), suction and discharge connections. Liquid P-precipitant is pumped from the auto cistern to the reservoir by means of two chemical resistant pumps with the capacity of 15 m3/h (one in operation and second standby). The flow of the P-precipitant is measured with electromagnetic inductive flow meter. Dosing of the P-precipitant will be in regards to the flow to the biological units.

The structure is designed with parameters sufficient also for the planned scope of Stage 2.

Table 14: Technical data for the P-precipitant storage

parameter	Unit	value
reservoir volume	m^3	10
number of reservoirs	pcs	1
number of dosing pumps	pcs	2+1
maximal dosing pump capacity	l/hour	30

GEORGIOS KARKANIAS
PRESIDENT

3/12/18

2.1.1.4 Filtration unit

In order to meet the effluent quality requirements and additional the effective operation of UV system is foreseen filtration unit.

The proposed microscreen drum filter of FBB type is suitable for tertiary treatment, mainly for removal of undissolved matter in municipal wastewater treatment plants.

Biological treated wastewater containing solid particles flows through the inlet pipe (sewer) into the interior part of the filter drum. Impurities are caught on the inner side of the filter cloth and the filtered wastewater flows through the cloth out. The entire filter remains off during this process. As the filter cloth slowly becomes clogged by the increasing amount of filtered debris, its resistance to the flow increases and the water level inside the filter drum rises. When the preset difference between the levels inside and outside of the filter drum is reached, the water level sensor positioned at the front of the filter, is automatically activated. Simultaneously the drum drive and the backwash pump which pumps the filtered wastewater into the jet rinse system are activated. The debris accumulated on the inner side of the filter cloth is removed by the directed jet stream of water from the nozzles and then washed into the waste trough positioned in the inner drum. The debris is then washed into the sludge tank where it is washed out by the sludge pump. This pump is automatically controlled by the level sensors located on the wall of the sludge tank.

After the rinsing process is finished, hydrostatic pressure drops. The rinsed cloth is moved to the bottom of the filter by the rotation of the drum, the difference in levels inside and outside the drum diminishes and the sensor automatically switches off the drum rotation and the pump. The rotating drum and the pump remain off until reactivated. This operation mode repeats in cycles. The ratio of the rest cycle and the rotation cycle depends on the amount of detritus flowing into the filter, its character and the condition of the filter cloth.

The structure includes two reinforced-concrete channels in which two separate drum filters will be installed, one for stage 1 and one for stage 2. Even distribution of treated wastewater to two channels is ensured for Stage 2, as well as a shutdown of either of the two channels. The structure is built within Stage 1 and one drum filter is installed within Stage 1.

GEORGIOS KARKANIAS 3/12/18
PRESIDENT

2.1.1.5 UV disinfection of outflow – Measuring effluent flume

UV system serves as tertiary treatment - outflow disinfection.

UV radiation in the on going process wastewater appears as microbiologically effective, certain technical and cost-saving way to reduce germs. The practice is achieved by reducing the amount of UV radiation germs up to several orders of magnitude.

The advantages of UV disinfection are many including:

- immediate and reliable disposal of bacterial cultures without addition of chemicals
- photochemical reduction of undesirable substances
- no formation of THM or AOX
- no undesirable by-products
- no adverse taste or odour effects of the treated water
- no storage or dosing of disinfectant chemicals
- effectiveness of UV disinfection is dependent on the pH value of treated water
- needs no special reaction vessel or the corresponding time delay
- minimum space requirements of UV technology
- low investment and operating costs and high operational reliability and performance

The decisive criterion for the effectiveness of UV radiation is applied to determine the minimum dose for a given operating condition in the medium disinfected. The dose is defined as the product of intensity and duration of radiation exposure and gives in mJ/cm2. The minimum dose of UV light was calculated by the manufacturer and meets the effluent quality requirements.

The channel UV-system is equipped with automatic quartz sleeve cleaning system and UV-intensity monitoring.

The structure is designed as a single-storey building with roof. The structure includes two reinforced-concrete channels in which two separate UV disinfection units will be installed, one for stage 1 and one for stage 2. Even distribution of treated wastewater to two channels is ensured for Stage 2, as well as a shutdown of either of the two channels. The whole structure is designed to be built and one UV system is installed within Stage 1.

Furthermore, it is foreseen an automatic station for receiving samples of treated wastewater.

One flow measuring structure is designed to be installed. One measuring flume will be installed on the treated wastewater runoff at the end of the process. Parshall measuring flume is used due to their reliability and a wide range of flow rate.

The structure is designed as an open, reinforced-concrete flume made of water-resistance concrete, in which the measuring profile will be installed.

3/12/18

GEORGIOS KARKANIAS
PRESIDENT

2.1.1.6 Sludge Treatment Units

The WWTP Danilovgrad sludge treatment facility will treat excess activated sludge and chemical sludge (after the incorporation of chemical phosphorus precipitation), which will be pumped from the system together with activated sludge. The production of excess activated sludge includes sludge from chemical precipitation of phosphorus.

Aerobic stabilization and thickening of the excess sludge

An aerated tank is used for stabilization of the mixture of excess activated sludge and sludge from chemical precipitation of phosphorus. The period of sludge accumulation in aerobic condition guarantees a sufficient stabilization of the sludge. Excess sludge is pumped (from excess sludge pumping station) to the aerated excess sludge stabilization tank. Aerobic stabilization tank is intermittently aerated. The excess sludge is thickened by sedimentation and decantation during the interruption of aeration in the sludge stabilization tank. Before each sludge discharge from sludge activation tank, the aeration in tank of sludge stabilization is stopped. The sludge settling and thickening is about 3-4 hours. Sludge aerobic stabilization tank has aeration system with jet aerator for additional sludge stabilization, an ultrasonic level meter, overflow, three level switches (minimum, maximum, alarm), one submersible mixer and two (one standby) progressive cavity sludge pumps for emptying to the sludge holding tank.

The tank is located close to the mechanical sludge dewatering machinery-room.

The structure is designed with parameters sufficient also for the planned scope of Stage 2.

The aerobic stabilization of sludge will assure a totally smell-free operation of the sewage treatment plant. The stocked condensed sludge (approximately 2 - 3%) will be dewatered with help of polymer flocculation agent in a centrifuge device and brought away for the agricultural exploitation (it is aerobic stabilized). Stabilized sludge holding tank is used for equalizing sludge before its dewatering.

Table 15: Technical data for Sludge aerobic stabilization tank

		Start up	Design capacity
Capacity of the treatment plant	PE	3 900	6 000
Volume of the aerobic stabilization excess sludge tank	m^3	353.25	353.25
Jet aerator capacity	Nm^3/hour	620	620

Aerobic stabilized/thickened sludge holding tank

Aerobically stabilized/ thickened sludge is accumulated in a mechanically mixed holding tank. The volume of sludge holding tank is 60.84m3.The tank's capacity is sufficient to hold a 4 days production of thickened sludge for 1st stage. Aerobically stabilized/ thickened sludge is pumped from the holding tank to the mechanical dewatering unit.

The tank is located close to the mechanical sludge dewatering machinery-room.

3/12/18

GEORGIOS KARKANIAS
PRESIDENT

The structure is designed with parameters sufficient also for the planned scope of Stage 2.

Sludge Mechanical Dewatering unit

The produced aerobically stabilized/thickened sludge will be dewatered using a centrifuge (decanter). During 1st Stage, only the stored sludge will be dewatered.

Sludge from the sludge holding tank is pumped with two progressing cavity pumps, of which one is operating and one is on standby and they will operate in alternate mode in order to achieve equal number of operating hours. All pumps and motors of the centrifuge have frequency inverters. Pipeline to the centrifuge is equipped with an electromagnetic inductive flow meter.

Design of centrifuge:

Weekly operation time	5 days
Daily operation time (including start and washing of the centrifuge)	5 hours
Minimum final dry matter content (only with polyelectrolyte adding)	23 %

Table 166: Technical data for the sludge dewatering

Parameter	unit	value
Weekly operation time	d	5
Daily operation time (including start and washing of the centrifuge)	h	5
Number of centrifuges	-	1
Flow of centrifuge	m^3/h	5
Sludge feeding pump capacity	m^3/h	Max 6
Number of sludge feeding pumps	-	1+1
Number of dewatered sludge containers	-	2

A machinery-room for the mechanical sludge dewatering is designed and is located close to the sludge aerobic stabilization and thickening tank. The structure is designed as a single-storey building with roof. The building shall be thermally insulated. The machinery-room shall be ventilated and heated to the min of 10 °C, or according to valid regulations. The building includes a separate switch room, separated from the machinery-room, with an independent ventilation system. The machinery-room contains machines for sludge dewatering and its structure allows the installation of conveyor. The design assumes mechanical-technological equipment for mechanical sludge thickening to be added within Stage 2. A hard-surface area for containers will be built next to the building. The spatial arrangement and orientation of the building allows trouble-free handling of the container with a truck. The building also includes room to hold the equipment of

3/12/18

GEORGIOS KARKANIAS
PRESIDENT

aerobic sludge stabilization. A heating/cooling system is designed in the building to allow the operation at extreme temperatures and at the maximum loading of the machinery.

In the mechanical sludge dewatering structure the air-conditioning system includes air deodorizing ensuring the removal of odours from the air discharged to the surrounding outer environment. Particularly limits set by the EIA, which forms an integral part of the WWTP design and construction, will be observed.

Structurally, the structure is built within Stage 2, technologically only for Stage 1.

The hard-surface area for the containers will be made of concrete, drained to the internal sewage system.

At present WWTP Danilovgrad is not exist, therefore we do not know the quality of its sludge. We also do not know soil composition in field, where will be applied dewatered sludge.

Danilovgrad is not industrial city, therefore we do not expect the production of highly contaminated sewage sludge. Therefore, we expect the maximum sludge contamination by point C, according point b, Annex 1 of the Regulation.

Due to the uncertain composition of sludge (sludge do not exists), we propose to use stabilized and dewatered sludge from WWTP Danilovgrad for reclamation of landfill. The minimal concentration of dry matter in the dewatered sludge is 25% (after dewatering in the centrifuge and further dewatering into the sludge storage site).

Mechanical sludge thickening (2nd stage)

The mechanical sludge thickening machinery-room will be realized within Stage 2 of the construction, structurally it will be prepared within Stage 1. The mechanical-technological equipment will be located in the mechanical sludge dewatering machinery-room within Stage 2.

Dewatered sludge storage site

The structure will serve as a reserve temporary storage site of dewatered sludge prior to its disposal. Also, this structure will serve for further sludge dewatering, so that to be achieved concentration of dry matter in the dewatered sludge minimum 25%.

This storage site will be covered with transparent material.

The structure is designed with parameters sufficient also for the planned scope of Stage 2.

The structure is designed as a reinforced-concrete monolithic structure with a handling area, made of water-resistant concrete, consisting of the bottom (reinforced-concrete slab) and reinforced-concrete supporting walls from three sides, covered with roof.

The effective area of the structure is 325m2 (12.5m * 26m).

3/12/18

GEORGIOS KARKANIAS
PRESIDENT

2.1.1.7 Common requirements of WWTP

Diesel generator

Diesel generator is provided as a substitute to power supply. Diesel generator will be supply electric power for WWTP operation at the time of power outage. Sludge management will not be supplied with electricity from diesel generator.

Service water preparation unit

Potable and service water distribution system is designed for the WWTP premises. The source of potable water will be the existing supply system of the town of Danilovgrad. A connection running along an existing unpaved road to the WWTP is designed. The connection includes a measurement shaft. The in-compound potable water distribution system will supply all main structures. It will be used for hygienic purposes and operation of those technological equipment and machinery which are required to use potable water. The distribution system is designed to meet hygienic and technological requirements.

The source of service water will be treated water from the WWTP effluent obtained from the outflow of the UV disinfection structure. The service water distribution is designed according to the operational requirements and needs of technological equipment and machinery supplied. Alternatively, potable water may be used as the source of service water.

Specifically, treated wastewater, defined as service water, is used as wash water for the equipment such as coarse and fine screens, spiral conveyers, spiral presses, centrifuge etc. After the disinfection one submersible pump pumps water into the tank with effective volume 4,5 m3 (1.5m*1.5m*2m), equipped with automatic supplemental filling with potable water and three level switches, placed inside the structure. A set with two pressure boosting pumps and expansion vessels (automatic pressure station) raises the pressure, which is necessary for the washing of individual equipment (max 6 bar). The automatic pressure station is equipped with its own automatic control of pumps with frequency converters.

A fire-fighting water source is provided in compliance with relevant regulations.

Influent and effluent waste water monitoring

The operator ensures sampling of inflow wastewater, treated wastewater, concentration of mixed liquor etc. Samples will be analyzed by an accredited laboratory. The number of the samples is minimal 1 times monthly. During the start-up of WWTP operation it is recommended to make samples analyses weekly.

Sampling profiles:

- Inflow wastewater – pH, COD, BOD5, SS, VSS, NKj, Ptot
- Treated wastewater – pH, COD, BOD5, SS, VSS, Ntot, N-NH4, N-NO3, Ptot
- Mixed liquor in activated basin – Imhoff, SS, VSS
- Return and excess sludge – SS, VSS

3/12/18

GEORGIOS KARKANIAS
PRESIDENT

- Stabilized sludge – SS,VSS
- Dewatered sludge - TS, VTS, SS, VSS

Flow measurement:

- Outflow of treated wastewater
- Return sludge
- Excess sludge
- Flow to the sludge dewatering
- Dose of phosphorus precipitation agent
- Dose of solution of organic flocculant

Installation of online analysers is not proposed.

Waste water sludge monitoring

Sludge is the result of treatment and is directly in the function of treatment level and technology. The quality of sludge will be analysed regularly to prevent possible hazardous impacts on the environment. Sludge will be managed in accordance with the regulations "PRAVILNIK o bližim uslovima koje treba da ispunjava komunalni kanalizacioni mulj. količine. obim. učestalost i metode analize komunalnog kanalizacionog mulja za dozvoljene namjene i uslove koje treba da ispunjava zemljište planirano za njegovu primjenu", "Official Gazette no. 89/09 of 31 December 2009".

The monitoring programme involves the following indicators:

- Quantities of the processed sludge;
- Mass of dry substance;
- Concentration of total N (mg/kg DS.);
- Concentration of total P (mg/kg DS);
- Concentration of total K (mg/kg DS);
- Concentration of Cd (mg/kg DS);
- Concentration of Pb (mg/kg DS);
- Concentration of Cr (mg/kg DS);
- Concentration of Zn (mg/kg DS);
- Concentration of hazardous organic substances (PCB,. HCH, etc.) (µg/kg DS)

GEORGIOS KARKANIAS
PRESIDENT

3/12/18

2.1.1.8 Blower house

The structure, in which blowers of circulating tanks are to be placed, is designed as a single-storey building with a saddle roof. The building ensures safe operation and maintenance of the blowers. It is divided into a blower room and a switch room. The building shall be fitted with equipment for handling the blowers (their assembly and disassembly). The air intake is located on the northern part of the building. The blower room shall be clad with noise insulation to prevent the maximum permissible noise level from being exceeded at the WWTP premise border. A heating/cooling system is designed in the building to allow the operation at extreme temperatures and at the maximum loading of the blowers.

Structurally, the structure is built within Stage 2, technologically only for Stage 1.

Building foundations, foundations for technological equipment, cable troughs, supporting floor slabs, and other supporting concrete parts of the building shall be made of reinforced-concrete. The ceiling is designed in the form of a monolithic reinforced-concrete structure.

The walls shall be built from perforated bricks of a complete bricklaying system.

The roof supporting structure shall be formed by a system of wooden prefabricated truss girders with longitudinal wind bracing.

Standard internal plaster, lime-cement external plaster; reinforced-concrete floor with mineral filling and dust-prevention coating; plastic windows, steel doors.

The structure shall include locksmith's products (lids, covers, etc.).

2.1.1.9 Operation building

The structure is designed as a single-storey building with a saddle roof. It shall serve as the control and administrative building, providing facilities for the total of 11 persons. The building contains a control room with a view of the WWTP structures, office, meeting room, small kitchen, clean and dirty changing rooms, daytime room, washroom and toilet, and a room for handling samples with basic laboratory equipment. The building shall be thermally insulated with residential rooms heated to the min of 20 °C, or according to valid regulations.

The structure is designed with parameters sufficient also for the planned scope of Stage 2.

Foundations, supporting floor slabs, and other supporting concrete parts of the structure shall be made of reinforced-concrete. The ceiling shall be made in the form of a monolithic reinforced-concrete structure.

The walls shall be built from perforated bricks of a complete bricklaying system.

The roof supporting structure shall be formed by a system of wooden prefabricated truss girders with longitudinal wind bracing.

Standard internal plaster, lime-cement external plaster; floors with industrial ceramic skid-proof tiles; walls with ceramic cladding; plastic windows, steel doors.

3/12/18

GEORGIOS KARKANIAS
PRESIDENT

The structure includes locksmith's products (lids, covers, etc.).

Warehouse (part of operation building)

The structure is designed as a part of operation building (single-storey building with a saddle roof). This part of building provides safe storage of tools, machines, and material used for the WWTP operation, repairs, and maintenance. The net storage area corresponds to the minimum requirements and is kept dry and clean. The warehouse includes a space for storing acids and alkalis. This part of building shall be thermally insulated, ventilated, and heated to the min of 10 °C, or according to valid regulations.

The structure is designed with parameters sufficient also for the planned scope of Stage 2.

Foundations, supporting floor slabs, and other supporting concrete parts of the structure shall be made of reinforced-concrete. The ceiling shall be made in the form of a monolithic reinforced-concrete structure.

The walls shall be built from perforated bricks of a complete bricklaying system.

The roof supporting structure shall be formed by a system of wooden prefabricated truss girders with longitudinal wind bracing.

Standard internal plaster, lime-cement external plaster; floors with industrial ceramic skid-proof tiles; walls with ceramic cladding; plastic windows, steel doors.

The structure shall include locksmith's products (lids, covers, etc.).

2.1.1.10 Garages

It is provided two garages, one for truck and one for two passenger cars.

The structures is designed as single-storey buildings with a saddle roof. The first building provides parking space for one truck and the second building provides parking space for two passenger cars and separate location of mobile backup power supply including the necessary equipment. The buildings shall be heated to the min of 5 °C, or according to valid regulations.

The structures is designed with parameters sufficient also for the planned scope of Stage 2.

Foundations, supporting floor slabs, and other supporting concrete parts of the structure shall be made of reinforced-concrete. The ceiling shall be made in the form of a monolithic reinforced-concrete structure.

The walls shall be built from perforated bricks of a complete bricklaying system.

The roof supporting structure shall be formed by a system of wooden prefabricated truss girders with longitudinal wind bracing.

Standard internal plaster, lime-cement external plaster; mesh-reinforced concrete floors with filling, resistant against abrasion, mechanical damages and dustiness; plastic windows, steel doors; automatic, electrically-driven sectional garage doors with thermal insulation and integrated openings.

The structure shall include locksmith's products (ventilation grilles, etc.).

GEORGIOS KARKANIAS
PRESIDENT

3/12/18

Technical Offer

Analytical list with description of electromechanical equipment

KARKANIAS ENVIRONMENTAL TECHNOLOGY S.A.
INDUSTRIAL AREA OF LARISA - GREECE
POSTAL CODE 41004, BOX 3053
TEL.: +30 2410 541366 - FAX: +30 2410 541354
Email: info@karkanias.gr
TAX NUMBER: 095244711
REGISTRATION NUMBER: 48779/31/B/01/12

GEORGIOS KARKANIAS
PRESIDENT

3/12/18

CONTENT

1. INLET AND OVERFLOW MANHOLE 1
1.1 Four (4) penstocks for chambers isolation 1
1.2 Two (2) gravel traps 1
1.3 One (1) lifting device for gravel traps 1
1.4 One (1) motorized penstock for controlling inflowing quantity of wastewater 1
1.5 One (1) scum diaphragm 1
1.6 One (1) overflow weir 1
1.7 One (1) ultrasonic flow meter with parshall flume 2
1.8 One (1) automatic station for receiving untreated wastewater samples 2
1.9 Two (2) containers for gravels 3
1.10 One (1) gravel container chassis with electric drive 3

2. SEPTAGE UNIT 4
2.1 One (1) electromotor knife gate valve on the inlet pipeline 4
2.2 One (1) gravel trap 4
2.3 One (1) electromagnetic inductive flow meter on the inlet pipeline 4
2.4 One (1) pH and temperature meter on the inlet pipeline 5
2.5 One (1) conductivity meter on the inlet pipeline 6
2.6 One (1) automatic cleaned fine screen, drum with screenings screw 7
2.7 One (1) submersible mixer with lifting device in the septage collection tank 8
2.8 Two (2) submersible pumps in the septage collection tank, one standby 8
2.9 One (1) lifting device (davit) for pumps 8
2.10 One (1) ultrasonic level meter 9
2.11 One (1) valve for tank emptying by gravity 9
2.12 One (1) container for screenings and gravels 9
2.13 One (1) automatic station for receiving septage 9
2.14 One (1) automatic station for receiving samples of septage 10

3. PUMPING STATION 11
3.1 Four (4) penstocks for screens isolation 11
3.2 One (1) automatic cleaned coarse screen (multi rake) 11
3.3 One (1) manual cleaned coarse screen, standby 11
3.4 One (1) screw conveyor for screenings 11
3.5 One (1) ultrasonic differential level meter 12
3.6 One (1) container for screenings 12
3.7 One (1) screenings container chassis with electric drive 12
3.8 Three (3) submersible pumps in pumping station, one standby 13
3.9 Three (3) frequency converters (inverters) for pumps 13
3.10 One (1) electromagnetic inductive flow meter on pumping discharge pipe 13
3.11 One (1) ultrasonic level meter 14
3.12 One (1) lifting device (monorail) for pumping station 14
3.13 One (1) scum diaphragm for floating substances 14
3.14 One (1) penstocks 14

4. MECHANICAL WASTEWATER PRETREATMENT UNIT 15
4.1 Two (2) valves on by pass pipeline and inlet pipeline 15
4.2 One (1) compact mechanical pretreatment unit 15
4.3 Four (2+2) containers for screenings and sand 17
4.4 One (1) screenings container chassis with electric drive 17

3/12/18

4.5 One (1) sand container chassis with electric drive 17

5. BIOLOGICAL TREATMENT PROCESS 18

5.1 FLOW DISTRIBUTION CHAMBER I 18
5.1.1 One (1) overflow weir for flow distribution 18
5.1.2 One (1) valve on pipeline 18
5.1.3 One (1) overflow telescopic valve for by pass 18

5.2 PREDENITRIFICATION TANK 18
5.2.1 One (1) submersible mixer with lifting device in the predenitrification tank 18

5.3 CIRCULATING ACTIVATED SLUDGE TANK 19
5.3.1 Two (2) submersible mixers with lifting devices, one per corridor 19
5.3.2 Two (2) rotary lobe blowers for aeration, one standby, with noise cover 19
5.3.3 Two (2) frequency converters (inverters) for blowers 19
5.3.4 One (1) lifting device (monorail) for blowers 19
5.3.5 One (1) fan for ventilation of blowers building 20
5.3.6 One (1) main air pipeline 20
5.3.7 Two (2) air distribution pipes with batterfly valves for flow control or isolation 20
5.3.8 Two (2) air grids for diffusers 20
5.3.9 One hundred and ninety two (192) fine bubble membrane diffusers (disc type), ninety six per grid 20
5.3.10 One (1) overflow weir 20
5.3.11 One (1) dissolved oxygen meter 21
5.3.12 One (1) MLSS meter 23
5.3.13 One (1) mixer (vertical shaft) in outlet manhole of the tank 23

5.4 FLOW DISTRIBUTION CHAMBER II 24
5.4.1 One (1) overflow weir for flow distribution 24
5.4.2 One (1) valve on pipeline 24
5.4.3 One (1) overflow telescopic valve for by pass 24

5.5 FINAL SETTLING TANK 24
5.5.1 One (1) rotated radial bridge with bottom and surface scrapers 24
5.5.2 One (1) scum skimmer 24
5.5.3 One (1) influent well 24
5.5.4 One (1) circumferential overflow weir (V- notch) 25
5.5.5 One (1) circumferential scum diaphragm 25

5.6 RETURN ACTIVATED SLUDGE AND EXCESS SULDGE PUMPING STATION 25
5.6.1 Two (2) submersible pumps for return sludge, one standby 25
5.6.2 Two (2) frequency converters (inverters) for return sludge pumps 25
5.6.3 One (1) electromagnetic inductive flow meter for return sludge 26
5.6.4 One (1) ultrasonic level meter 26
5.6.5 Two (2) lifting devices (davit) for pumps, one for excess sludge pumps and one for return sludge pumps 26
5.6.6 Two (2) submersible pumps for excess sludge, one standby 27
5.6.7 Two (2) frequency converters (inverters) for excess sludge pumps 27
5.6.8 One (1) electromagnetic inductive flow meter for excess sludge 27
5.6.9 One (1) valve on sludge pipeline 28

5.7 CHEMICAL PHOSPHORUS PRECIPITATION 28

3/12/18

5.7.1 Three (3) dosing (diaphragm) pumps for phosphorus precipitation chemical solution, one standby, with pipes and valves 28
5.7.2 One (1) electromagnetic inductive flow meter for phosphorus precipitation chemical solution 28
5.7.3 One (1) double-walled reservoir for phosphorus precipitation chemical solution, with three level switches 29
5.7.4 Two (2) pumps (magnetic driven, plastic, centrifugal) for chemical solution, one standby 29

6. FILTRATION UNIT 30
6.1 One (1) overflow penstock for filter tank flow distribution and isolation 30
6.2 One (1) penstock for bypass 30
6.3 One (1) automatic cleaned microscreen rotary drum filter for wastewater tertiary treatment 30

7. UV DISINFECTION UNIT - EFFLUENT 32
7.1 Two (2) overflow penstocks for UV channel isolation 32
7.2 One (1) UV disinfection automatic cleaned system 32
7.3 One (1) ultrasonic flow meter with parshall flume 34
7.4 One (1) automatic station for receiving treated wastewater samples 34
7.5 One (1) submersible pump for service water tank 35
7.6 Three (3) level switches for submersible pump operation 35
7.7 One (1) lifting device for submersible pump 35
7.8 One (1) overflow weir in UV outlet manhole 35

8. SLUDGE TREATMENT UNITS 36

8.1 SLUDGE AEROBIC STABILISATION AND THICKENING TANK 36
8.1.1 One (1) submersible mixer with lifting device 36
8.1.2 One (1) submersible jet aerator, with one extra pump stock 36
8.1.3 One (1) ultrasonic level meter 36
8.1.4 Three (3) level switches 37
8.1.5 One (1) lifting device for jet aerator 37
8.1.6 Two (2) drainage overflow pipes with gate valves 37
8.1.7 Two (2) progressing cavity (screw) sludge pumps for feeding holding tank, one standby, with overpressure protection and dry run protection 37
8.1.8 Two (2) frequency converters (inverters) for sludge pumps 37

8.2 SLUDGE HOLDING TANK 38
8.2.1 One (1) submersible mixer with lifting device 38

8.3 SLUDGE MECHANICAL DEWATERING UNIT 38
8.3.1 Two (2) progressing cavity (screw) sludge pumps for decanter feeding, one standby, with overpressure protection 38
8.3.2 Two (2) frequency converters (inverters) for sludge pumps 38
8.3.3 One (1) electromagnetic inductive flow meter for stabilized/thickened sludge 39
8.3.4 One (1) centrifuge (decanter) for sludge dewatering 40
8.3.5 One (1) automatic preparation device for polyelectrolyte 41
8.3.6 Two (2) progressing cavity (screw) pumps for dosing polyelectrolyte, one standby, with overpressure protection 42
8.3.7 Two (2) frequency converters (inverters) for polyelectrolyte dosing pumps 42
8.3.8 One (1) electromagnetic inductive flow meter for polyelectrolyte solution 42
8.3.9 One (1) screw conveyor for dewatered sludge 43
8.3.10 Two (2) containers for dewatered sludge 43
8.3.11 One (1) sludge container chassis with electric drive 43
8.3.12 One (1) fan for ventilation of sludge dewatering building 43

3/12/18

8.3.13 One (1) lifting device (overhead crane) for dewatering equipment 43

9. SERVICE WATER UNIT 44

9.1 One (1) automatic pressure station with two (one standby) centrifugal pumps for service water 44

10. TRANSFORMER STATION, POWER SWITCHBOARDS, BACKUP POWER SUPPLY 45

10.1 Medium Voltage Switchboard 45
10.2 Transformer 45
10.3 Low Voltage Main Distribution Switchboard 45
10.4 Two (2) Power Distribution Switchboards (PDC) 45
10.5 Backup Power Supply Unit 46

11. AUTOMATION SYSTEM & SCADA 47

11.1 PLC 01 in Blower house 47
11.2 Touch Panel 01 in Blower house 47
11.3 PLC 02 in Sludge dewatering building 47
11.4 Touch Panel 02 in Sludge dewatering building 48
11.5 SCADA 48
11.6 Servers, 2 pcs 48
11.7 Clients, 2 pcs 49
11.8 Printer A4 49
11.9 Printer A3+ 49
11.10 UPS 49

KARKANIAS ENVIRONMENTAL TECHNOLOGY S.A.
INDUSTRIAL AREA OF LARISA - GREECE
POSTAL CODE 41004, BOX 3053
TEL.: +30 2410 541366 - FAX: +30 2410 541354
Email: info@karkanias.gr
TAX NUMBER: 095244711
REGISTRATION NUMBER: 48779/31/B/01/12

GEORGIOS KARKANIAS
PRESIDENT

3/12/18

1. INLET AND OVERFLOW MANHOLE

1.1 Four (4) penstocks for chambers isolation

- manufacturer	: KARKANIAS SA
- dimensions (W x H)	: 800 x 600 mm
- material	: AISI 304

1.2 Two (2) gravel traps

- manufacturer	: KARKANIAS SA
- dimensions (W x L x H)	: 1000 x 1000 x 400mm
- bar spacing	: 80mm
- material	: AISI 304

1.3 One (1) lifting device for gravel traps

- manufacturer	: KARKANIAS SA
- material	: st37
- lifting capacity	: 1500kg

1.4 One (1) motorized penstock for controlling inflowing quantity of wastewater

- manufacturer	: KARKANIAS SA
- dimensions (W x H)	: 800 x 800 mm
- material	: AISI 304
Gearmotor	
- power	: 0,37KW
- electrical connections	: 400V, 50Hz

1.5 One (1) scum diaphragm

- manufacturer	: KARKANIAS SA
- material	: AISI 304

1.6 One (1) overflow weir

- manufacturer	: KARKANIAS SA
- material	: AISI 304

3/12/18

1.7 One (1) ultrasonic flow meter with parshall flume

- manufacturer : SIEMENS
- type : Sitrans LUT 430 (transducer)
  Echomax XRS 5 (sensor)

Ultrasonic transducer with ultrasonic sensor for contactless measurement of fill levels, distances, volumes, flow rates, tendencies or quantities in open sluices, channels or dams with energy saving algorithms and time to spill calculation, preprogrammed arithmetic operations for linearization of Parshall sluices, rectangular sluices, overfall or V dams and half shells, determination of volume as well as control of rainwater, vent pumps and flushing dumps, programming of one universal trace with 40 supporting points, programming by means of local push buttons or EDD or DTM based software, dynamic envelope curve adaptation for echo analysis, automatic suppression of interfering echo, HART communication, data logging, power supply 100 - 230 V AC, output 4 mA – 20 mA, load 600 ohm, 3 relays rated power 5 A at 250 V AC, 2 normally open contacts, 1 changeover contact, accuracy 0.17 %, field enclosure degree of protection IP 65, ambient temperature -20 – +50 °C, LCD display 60 mm x 40 mm with backlighting, parameter backup capability,

Ultrasonic sensor with connecting cable 10 m, measuring range 0.3 – 8 m, beam angle 10°, measuring frequency 44 kHz, degree of protection IP65/IP68, approval according to CE, FM, CSA(US/C), UL, C-TICK, integrated temperature compensation, ambient temperature -20 – +50°C, including operating instructions, mounting material, supply and mount ready-to-operate.

1.8 One (1) automatic station for receiving untreated wastewater samples

- manufacturer : HACH
- type : AS950

Sampler

Housing material: Impact resistant ABS plastic, 3-section construction Double-walled base with 2.54 cm insulation, direct ice contact with bottles (Sampler)

Temperature: Operating: 0 - 49 °C
Storage: -40 - 60 °C

Power requirements (Voltage): 12 V DC

Dimensions (W x H x D) Standard Base: 50.5 cm x 69.4 cm

Weight Standard: 15 kg with (24) 1 L Polyethylene bottles

Controller

Housing material: PC/ABS blend, NEMA 4X, 6, IP68, corrosion and ice resistant (Controller)

Display: 1/4 VGA, Colour; self-prompting/menu-driven program

User interface: Membrane switch keypad with 2 multiple function soft keys

Languages user interface: English, French, Spanish, Italian, German, Portuguese, Chinese

Lock function: Access code protection prevents tampering

Memory: Sample history: 4000 records;

3/12/18

Data log: 325,000 records;

Event log: 2000 records

Communication capabilities: USB and optional RS485 (MODBUS)

Inputs: One 0/4-20 mA input for flow pacing

Certifications: CE, UL2

Sample container

(24) 1 L Polyethylene bottles

1.9 Two (2) containers for gravels

- manufacturer	: VAN
- type	: NM-5V
- capacity	: 5m3
- dimensions (W x L x H)	: 1700 x 3000 x 1250mm

1.10 One (1) gravel container chassis with electric drive

- manufacturer	: KARKANIAS SA
- loading capacity	: 9tn

3/12/18

2. SEPTAGE UNIT

2.1 One (1) electromotor knife gate valve on the inlet pipeline

- manufacturer : VAG
- type : knife gate

2.2 One (1) gravel trap

- manufacturer : KARKANIAS SA
- dimensions (D x H) : 600 x 600
- material : AISI 304

2.3 One (1) electromagnetic inductive flow meter on the inlet pipeline

- manufacturer : SIEMENS
- type : Sitrans F M MAG 5100 W (sensor)
  : Sitrans F M MAG 5000

Flow sensor

Flowmeter for water and wastewater treatment plants for compact or separate transmitter. NBR hard rubber lining, integrated grounding and measuring electrodes made of Hastelloy C, flange size according to EN 1092-1, ambient temperature -40 – +70 °C, temperature of medium -10 – +70 °C, flange and flowmeter housing made of painted steel, terminal box with cable gland M20, flash memory to save calibration, verification data of sensor, and save customer-specific settings, degree of protection IP 67, approvals PED-97/23EG, removable part as spare, supply and mount ready-to-operate.

Transmitter

Microprocessor-controlled transmitter in compact or offset design in glass fibre-reinforced polyamide housing with backlight, three-line, alphanumeric display for flow, counter for forward, reverse or net flow, indication of flow direction, comprehensive self-diagnostics for error signalling and recording. Keypad with display unit, leak flow volume suppression, measuring principle with constant field pulsing, automatic zero adjustment, flash memory for automatic recording of calibration and verification data of sensor data as well as customer specific settings, measuring error 0.4 %, simultaneous utilization of analog output 0/4 – 20 mA, pulse output, digital input and output, relay output 24 V DC/1 A, as well as electrical isolation of inputs and outputs. Ambient temperature -20 - +60 °C, power supply 24 V DC, degree of protection IP 67, supply and mount ready-to-operate.

3/12/18

2.4 One (1) pH and temperature meter on the inlet pipeline

- manufacturer : B&C Electronics

Controller PH6587

- Inputs: pH electrodes (glass or antimony) / ORP electrodes / Pt100 / Pt1000
- Zero: ±2pH, ±100mV, ±5°C, ±9°F
- Sensitivity: 80 ÷ 110 % (70 ÷ 140 % antimony)
- Resolution: 0.01 pH, 1 mV, 0.1 °C/°F
- Accuracy: 0.2 % / Repeatability: 0.1 % / Non-linearity: 0.1 %
- Dual filter software: 0.4 ÷ 50.0 seconds for small and large variations
- Dual analog output: 0-20 mA / 4-20 mA Rmax 600 Ω
- Dual set points HI/LO: ON/OFF - PFM - PWM, SPST relays
- Hysteresis: 0 ÷ 1.40 pH, 0 ÷ 200 mV
- Delay: 0 ÷ 100.0 seconds
- Alarm: SPDT relay with delay 0 ÷ 100.0 seconds
- Cleaning function:
    - off / autoclean / manual, relay SPDT repetition time 0.1 ÷ 100.0 hours
    - cleaning time 1.0 ÷ 60.0 seconds
    - holding time 0.0 ÷20.0 minutes
    - SPST and SPDT relay contacts: 220 V - 5 A resistive load
- Operating temperature: -10 ÷ 60 °C
- Humidity: 95% without condensation
- Power supply: 85 ÷ 264 Vac - 50/60 Hz
- 9 ÷ 36 Vdc, 12 ÷ 24 Vac (option 091.42x)
- Terminal blocks: removable
- Weight: 1360 g
- Enclosure: ABS, IP 65 protection
- Dimensions: 256x230x89 mm
- EMC/RFI conformity: EN 61326

pH electrode SZ 1150

- PTFE double junction, polymeric gel, built-in Pt100.
- Range: 0/12 pH
- Temperature: 0/100 °C
- Pressure: 10 bar
- Body: in PVDF, Military 4-pin connector, 3/4" NPT thread
- Length: 140 mm (45 mm in immersion)

3/12/18

2.5 One (1) conductivity meter on the inlet pipeline

- manufacturer : B&C Electronics

Controller C7685

Selectable input from: a. 2 electrodes cells

b. transmitter 080310 and 4 electrodes cells

c. transmitter 080310 and inductive cells

Measurement range: 0.2mS÷40S with conversion capability in %, g/l, Beaume

Constant's cell: 0.1 / 0.2 / 0.5 / 1 / 2 / 5 / 10

Input for temperature measurement: Sensor RTD Pt100

Temperature compensation: Automatic and manual

Digital LCD display

Operation: Automatic and manual

Calibration parameters display

Dual set-point and alarm conditions display

Analog output 0-4/20mA

Dual Set-point with hysteresis, delay, and min/max programmable functions

Dual filter software 0,4/50 sec

Software: 3 access levels, user friendly, keyboard lock, watch-dog

Automatic overload protection and reset

EEPROM parameters storage

Power supply: 220V / 50Hz.

Watertight enclosure BC9616.2 with transparent front door

Protection: IP 65 (NEMA 4X)

Size: 200x200x187 mm

Dimensions: 200x200x187 mm

Probe SZ 3300.1

Graphite Electrode, Applications: From 200 μS to 200 mS.

Cell constant: K = 1 cm-1

Thermocompensator: Pt100

Material in contact with liquids: PES-graphite L=55 mm

Temperature: 100 °C max. at 10 bar, Pressure: 16 bar at 25 °C

Connector: 4-pin, Thread: 3/4" NPT

3/12/18

2.6 One (1) automatic cleaned fine screen, drum with screenings screw

- manufacturer : SEFT
- type : STV / C50
- flow : 50-60m3/h
- screenings weight and volume reduction : ≥40-50%
- External structure in stainless steel AISI304L
- Tank in stainless steel AISI304L
- Shaft less spirals in high carbon steel painted RAL 6029
- Bolts in A2
- Anti-wear material: bolted plates in stainless steel AISI304L

- Loading basket diameter: Ø456 mm
- Screw diameter for transport / compaction: Ø219 mm
- Filtration type: rounded holes
- Dimension: Ø10 mm
- Inclination: 35°
- Rectangular outlet spout for screening discharge 325 x 285 mm
- Basket cleaning through nylon bolted brushes
- Inlet: alum. DN100 Perrot w/motorized valve (24V)
- Outlet: alum. DN200 PN10
- Total length: 3.590 mm (motor excluded)
- Discharging height: 1.500 mm from ground level
- Washing system on compaction zone with manual valve
- Washing system on loading zone with manual valve
- Washing system on cesspool inlet zone with manual valve
- PE breathing valve on screw screen tank
- PE pipe for returning liquid of compaction zone
- predisposition for rod level sensor
- limit-switches for opening hatches
- Telescopic support foot in stainless steel AISI 304L
- Eyebolts

<u>Screw</u>

-Motor 1,1 kW, 400V, 50Hz, 3 phases, 4 poles, IP55, F class, 11 rpm, BONFIGLIOLI

3/12/18

2.7 One (1) submersible mixer with lifting device in the septage collection tank

- manufacturer	: WILO
- type	: TR 21.145-4/11 S14
- propeller diameter	: 210mm
- propeller speed	: 1390rpm
- rated power	: 1,3 KW
- power input (duty point)	: 1,2 KW
- maximum power input	: 1,74 KW
- electrical connections	: 400V, 50Hz

2.8 Two (2) submersible pumps in the septage collection tank, one standby

- manufacturer	: WILO
- type	: Rexa PRO V06 DA-623 / EAD1X4-T0015-540-O
- flow	: 5,2m3/h
- head	: 6,4m
- speed	: 1413rpm
- rated power	: 1,5 KW
- power input (duty point)	: 0,71 KW
- maximum power input	: 1,94 KW
- electrical connections	: 400V, 50Hz

2.9 One (1) lifting device (davit) for pumps

- manufacturer	: KARKANIAS SA
- material	: st37
- lifting capacity	: 250kg

3/12/18

2.10 One (1) ultrasonic level meter

- manufacturer : SIEMENS
- type : Sitrans Probe LU

Ultrasonic transducer with 2-wire technology, for detecting the level and volume of liquids and sludge, continuous measuring from 0.3 to 6 m, frequency 54 kHz, communication over 4 – 20 mA / HART, dynamic envelope adjustment for echo analysis, autom. suppression of interfering echo, ambient temperature -40 – +80 °C, integrated temperature compensation, sensor material PVDF copolymer, plastic housing, cable entry 2x M20 x 1.5, process connection screw thread G 2", EEPROM, programming via infrared receiver without opening the device, alphanumeric LC display, operating instructions, handheld programmer, degree of protection IP 67, including mounting bracket made of stainless steel (1.4301), lock nut, supply and mount ready-to-operate.

2.11 One (1) valve for tank emptying by gravity

- manufacturer : GEMAK
- type : gate

2.12 One (1) container for screenings and gravels

- manufacturer : VAN
- type : NM-5V
- capacity : 5m3
- dimensions (W x L x H) : 1700 x 3000 x 1250mm

2.13 One (1) automatic station for receiving septage

- Switchboard with all functions for automatic operation of the unit, identification and registration of customers. The switchboard is equipped with an automatic control device with industrial-protocol communication.
- Registration units for the receiving, allowing documents on the arrival and quantity of discharged wastewater to be printed
- Customers' magnetic cards that control the electromotor knife gate valve (code 2.1), by the evaluation system of the unit (acc. to the wastewater quality) and from the WWTP control system (e.g. reaching the maximum level in the reserve tank)
- One (1) electrically-driven valve – flushing service water piping

3/12/18

2.14 One (1) automatic station for receiving samples of septage

- manufacturer : HACH
- type : AS950

Sampler

Housing material: Impact resistant ABS plastic, 3-section construction Double-walled base with 2.54 cm insulation, direct ice contact with bottles (Sampler)

Temperature: Operating: 0 - 49 °C

Storage: -40 - 60 °C

Power requirements (Voltage): 12 V DC

Dimensions (W x H x D) Standard Base: 50.5 cm x 69.4 cm

Weight Standard: 15 kg with (24) 1 L Polyethylene bottles

Controller

Housing material: PC/ABS blend, NEMA 4X, 6, IP68, corrosion and ice resistant (Controller)

Display: 1/4 VGA, Colour; self-prompting/menu-driven program

User interface: Membrane switch keypad with 2 multiple function soft keys

Languages user interface: English, French, Spanish, Italian, German, Portuguese, Chinese

Lock function: Access code protection prevents tampering

Memory: Sample history: 4000 records;

Data log: 325,000 records;

Event log: 2000 records

Communication capabilities: USB and optional RS485 (MODBUS)

Inputs: One 0/4-20 mA input for flow pacing

Certifications: CE, UL2

Sample container

(24) 1 L Polyethylene bottles

3/12/18

3. PUMPING STATION

3.1 Four (4) penstocks for screens isolation

- manufacturer	: KARKANIAS SA
- dimensions (W x H)	: 800 x 1000 mm
- material	: AISI 304

3.2 One (1) automatic cleaned coarse screen (multi rake)

- manufacturer	: KARKANIAS SA
- capacity	: 130lt/s
- bar spacing (slot width)	: 50mm
- discharge height	: 7,5 m
- channel width	: 800mm
- material	: AISI 304
- power	: 2,2KW
- electrical connections	: 400V, 50Hz

3.3 One (1) manual cleaned coarse screen, standby

- manufacturer	: KARKANIAS SA
- capacity	: 130lt/s
- bar spacing (slot width)	: 50mm
- width	: 800 mm
- material	: AISI 304

3.4 One (1) screw conveyor for screenings

- manufacturer	: KARKANIAS SA
- type	: SC
- power	: 0,55KW
- electrical connections	: 400V, 50Hz
- trough material	: AISI304
- screw material	: S355

3/12/18

3.5 One (1) ultrasonic differential level meter

- manufacturer : SIEMENS
- type : Sitrans L HydroRanger 200
  Echomax XRS 5 (sensor)

Ultrasonic transducer with 2 ultrasonic sensors, for contactless measurement of fill levels, distances, flows, volumes, and tendencies on rakes, as well as in open sluices, channels or dams, differential measurement, plus alternating pump control of at least 6 pumps in pumping shafts. Preprogrammed arithmetic operations for linearization of venturi sluices, rectangular sluices, overfall or V dams and half shells. Determination of volume as well as control of rainwater, vent pumps and flushing dumps, programming of one universal trace with at least 32 supporting points. Profibus DP communication, dynamic envelope curve adaptation for echo analysis, automatic suppression of interfering echo, input 0 – 20 mA and 4 – 20 mA, output 0 – 20 mA and 4 – 20 mA, load 750 ohm, 6 relays, rated power 5 A at 250 V AC, 2 normally open contacts, 1 changeover contact, accuracy 0.25 % of MR, ambient temperature -20 – +50 °C, field enclosure degree of protection IP 65, display 100 mm x 40 mm LCD with backlighting, auxiliary power 24 V DC.

Two separate measuring points at a distance of at least 10 m, measuring range 0.3 – 8 m, beam angle 10°, frequency 44 kHz, integrated temperature compensation, IP 68, with approval according to ATEX II 2 G of the sensors, including mounting bracket made of stainless steel (1.4301), operating instructions, supply and mount ready-to-operate.

3.6 One (1) container for screenings

- manufacturer : VAN
- type : NM-5V
- capacity : 5m3
- dimensions (W x L x H) : 1700 x 3000 x 1250mm

3.7 One (1) screenings container chassis with electric drive

- manufacturer : KARKANIAS SA
- loading capacity : 9tn

3/12/18

3.8 Three (3) submersible pumps in pumping station, one standby

- manufacturer	: WILO
- type	: Rexa PRO C08 DA-435 / EAD1X2-T0039-540-O
- flow	: 51,4m3/h
- head	: 15,6m
- speed	: 2879rpm
- rated power	: 3,9 KW
- power input (duty point)	: 3,8 KW
- maximum power input	: 4,85 KW
- electrical connections	: 400V, 50Hz

3.9 Three (3) frequency converters (inverters) for pumps

- manufacturer	: SIEMENS
- type	: SINAMICS G120C
- power	: 5,5KW

3.10 One (1) electromagnetic inductive flow meter on pumping discharge pipe

- manufacturer	: SIEMENS
- type	: Sitrans F M MAG 5100 W (sensor)
	: Sitrans F M MAG 5000

Flow sensor

Flowmeter for water and wastewater treatment plants for compact or separate transmitter. NBR hard rubber lining, integrated grounding and measuring electrodes made of Hastelloy C, flange size according to EN 1092-1, ambient temperature -40 – +70 °C, temperature of medium -10 – +70 °C, flange and flowmeter housing made of painted steel, terminal box with cable gland M20, flash memory to save calibration, verification data of sensor, and save customer-specific settings, degree of protection IP 67, approvals PED-97/23EG, removable part as spare, supply and mount ready-to-operate.

Transmitter

Microprocessor-controlled transmitter in compact or offset design in glass fibre-reinforced polyamide housing with backlight, three-line, alphanumeric display for flow, counter for forward, reverse or net flow, indication of flow direction, comprehensive self-diagnostics for error signalling and recording. Keypad with display unit, leak flow volume suppression, measuring principle with constant field pulsing, automatic zero adjustment, flash memory for automatic recording of calibration and verification data of sensor data as well as customer specific settings, measuring error 0.4 %, simultaneous utilization of analog output 0/4 – 20 mA, pulse output, digital input and output, relay output 24 V DC/1 A, as well as electrical isolation of inputs and outputs. Ambient temperature -20 - +60 °C, power supply 24 V DC, degree of protection IP 67, supply and mount ready-to-operate.

3/12/18

3.11 One (1) ultrasonic level meter

- manufacturer : SIEMENS
- type : Sitrans Probe LU

Ultrasonic transducer with 2-wire technology, for detecting the level and volume of liquids and sludge, continuous measuring from 0.3 to 6 m, frequency 54 kHz, communication over 4 – 20 mA / HART, dynamic envelope adjustment for echo analysis, autom. suppression of interfering echo, ambient temperature -40 – +80 °C, integrated temperature compensation, sensor material PVDF copolymer, plastic housing, cable entry 2x M20 x 1.5, process connection screw thread G 2", EEPROM, programming via infrared receiver without opening the device, alphanumeric LC display, operating instructions, handheld programmer, degree of protection IP 67, including mounting bracket made of stainless steel (1.4301), lock nut, supply and mount ready-to-operate.

3.12 One (1) lifting device (monorail) for pumping station

- manufacturer : KARKANIAS SA
- material : st37
- lifting capacity : 500kg

3.13 One (1) scum diaphragm for floating substances

- manufacturer : KARKANIAS SA
- material : AISI 304

3.14 One (1) penstocks

- manufacturer : KARKANIAS SA
- dimensions (W x H) : 800 x 800 mm
- material : AISI 304

3/12/18

4. MECHANICAL WASTEWATER PRETREATMENT UNIT

4.1 Two (2) valves on by pass pipeline and inlet pipeline

- manufacturer : GEMAK
- type : gate

4.2 One (1) compact mechanical pretreatment unit

- manufacturer : SEFT
- type : GDF / D30 - FCP/C50
- flow : 30lt/sec
- screenings weight and volume reduction : ≥30-40%
- efficiency for sand removal (particles>200μm) and density above 1,65 Kg/dm3 : ≥90%

Screw screen FCP/C 50 with compaction

- Loading basket diameter: Ø456 mm
- Screw diameter for transport / compaction: Ø219 mm
- Filtration type: rounded holes
- Dimension: Ø6 mm
- Inclination: 35°
- Squared outlet spout for screening discharge
- Basket cleaning through nylon bolted brushes
- Motor 1,1 kW, 400V – 50Hz – 3 phases, 4 poles, IP55, F class
- Gear reducer, endless screw, 11 rpm

Sand settling tank

Horizontal screw conveyor and sand transport mod. TSA 200

- Shaft less screw diameter: Ø180mm
- High carbon steel single profile, pitch 1/1, thick. 20mm
- With mechanical water tight group
- Motor 0,55 kW, 400V – 50Hz – 3 phases, 4 poles, IP55, F class
- Gear reducer, endless screw, 5 rpm

3/12/18

Sand extraction screw conveyor mod. TSA"T" 168

- Shaft less screw diameter: Ø168mm
- High carbon steel single profile, pitch 1/1, thick. 20mm
- With mechanical water tight group
- Motor 0,37 kW, 400V – 50Hz – 3 phases, 4 poles, IP55, F class
- Gear reducer, endless screw, 5 rpm

Air blowing system

Electrical Blower

Flow rate: 25 m3/h

Pressure: 150 mbar

Motor: 0,25 kW, 380V, 50hz, 3phases, IP55 grade, F class

1" fitting

Side installation, with stainless steel hoses

Retention valve, Suction filter, Pressure valve

Wiring and installation included

Grease / Oil removal "go & back carriage" system

Motor 0,37 kW, 400V – 50Hz – 3 phases, 4 poles, IP55, F class

External structure in stainless steel AISI316 L

Tanks in stainless steel AISI316 L

Shaft less spirals in high carbon steel painted RAL6029

Bolts in A2

Anti-wear material: bolted plates in stainless steel AISI316 L

Inlet: alum. DN250 PN10

Outlet: alum. DN250 PN10

Degreasing outlet: Flanged alum. DN100 PN10

Overall dimensions:

Total length: 6955 mm

Settling tank length: 6.000 mm

Total width: 1.420 mm

Total height after installation: 3.055 mm

3/12/18

Grease Pump

Manufacturer: SYDEX

Flow rate: 400 lt/h (90rpm)

Pressure: 4 bar

Motor: 1,1 kW, 2,45A, 380V, 50hz, 3phases, IP55

Control panel

PLC Protection degree IP65, 400 V

In fiberglass with buttons at sight + Emergency button

Manual start/stop and automatic cycle start/stop selectors

Warning lights for: line presence, machine running, thermal alarm

Documentation: control panel electrical diagram + CE conformity declaration

Predisposition for remote control for start/stop with thermal alarm signal

Wiring included

Ventilation (if necessary)

Heating included

Consumption and working hours

Communication card for industrial protocol included

4.3 Four (2+2) containers for screenings and sand

- manufacturer	: VAN
- type	: NM-5V
- capacity	: 5m3
- dimensions (W x L x H)	: 1700 x 3000 x 1250mm

4.4 One (1) screenings container chassis with electric drive

- manufacturer	: KARKANIAS SA
- loading capacity	: 9tn

4.5 One (1) sand container chassis with electric drive

- manufacturer	: KARKANIAS SA
- loading capacity	: 9tn

3/12/18

5. BIOLOGICAL TREATMENT PROCESS

5.1 FLOW DISTRIBUTION CHAMBER I

5.1.1 One (1) overflow weir for flow distribution

- manufacturer	: KARKANIAS SA
- material	: AISI 304

5.1.2 One (1) valve on pipeline

- manufacturer	: GEMAK
- type	: gate

5.1.3 One (1) overflow telescopic valve for by pass

- manufacturer	: KARKANIAS SA
- material	: AISI 304

5.2 PREDENITRIFICATION TANK

5.2.1 One (1) submersible mixer with lifting device in the predenitrification tank

- manufacturer	: WILO
- type	: TR 50-2.34-4/12 S
- propeller diameter	: 500mm
- propeller speed	: 338rpm
- rated power	: 4,5 KW
- power input (duty point)	: 4,4 KW
- maximum power input	: 5,8 KW
- electrical connections	: 400V, 50Hz

3/12/18

5.3 CIRCULATING ACTIVATED SLUDGE TANK

5.3.1 Two (2) submersible mixers with lifting devices, one per corridor

- manufacturer	: XYLEM
- type	: SR 4410 400
- propeller diameter	: 2500mm
- propeller speed	: 27rpm
- rated power	: 2,3 KW
- power input (duty point)	: 1,78 KW
- maximum power input	: 3,10 KW
- electrical connections	: 400V, 50Hz

5.3.2 Two (2) rotary lobe blowers for aeration, one standby, with noise cover

- manufacturer	: ROBUSCHI
- type	: ES65/2P
- flow	: 776Nm3/h
- differential pressure	: 620mbar
- blower speed	: 3366rpm
- motor speed	: 2945rpm
- Absorbed power	: 22 KW
- Input power	: 30 KW
- electrical connections	: 400V, 50Hz
- sound pressure level	: 74dBA

5.3.3 Two (2) frequency converters (inverters) for blowers

- manufacturer	: SIEMENS
- type	: SINAMICS G 120C
- power	: 30KW

5.3.4 One (1) lifting device (monorail) for blowers

- manufacturer	: KARKANIAS SA
- lifting capacity	: 1000kg

3/12/18

5.3.5 One (1) fan for ventilation of blowers building

- manufacturer	: Soler & Palau (S&P)
- type	: HCFT/4-400/H
- flow	: 5070 m3/hr
- speed	: 1350 rpm
- power	: 300W
- electrical connections	: 400V, 50Hz

5.3.6 One (1) main air pipeline

- manufacturer	: KARKANIAS SA
- material	: AISI 304
- diameter	: DN150

5.3.7 Two (2) air distribution pipes with batterfly valves for flow control or isolation

- manufacturer	: KARKANIAS SA / EFFEBI
- material	: AISI 304
- diameter	: DN100

5.3.8 Two (2) air grids for diffusers

- manufacturer	: KARKANIAS SA
- material	: PVC, 10atm
- diameter	: Φ110

5.3.9 One hundred and ninety two (192) fine bubble membrane diffusers (disc type), ninety six per grid

- manufacturer	: XYLEM / SANITAIRE
- material	: EPDM
- diameter	: 229mm
- flow (duty point)	: 4,03m3/h
- efficiency	: 31%

5.3.10 One (1) overflow weir

- manufacturer	: KARKANIAS SA
- material	: AISI 304

3/12/18

5.3.11 One (1) dissolved oxygen meter

- manufacturer : HACH
- type : SC1000/ LDO sc

Digital Controller SC1000 (consisting of probe module and retractable digital display)
Connection with 4 digital Hach sc probes
Operating Temperature Range: -20 to 55 °C, 0 to 95% relative humidity, non-condensing
Storage Conditions: -20 to 70 °C, 0 to 95% relative humidity, non-condensing
Power Requirements (Voltage): 100 - 240 V AC, 24 V DC
Power Requirements (Hz): 50/60 Hz
Display: 1/4 inch VGA graphical backlit TFT color Glas/Glas-Touch screen, high resistance, 320 x 240 pixels
Display Viewing Area: 11.4 x 8.6 cm (4.5 x 3.4 in)
Alarm: Low alarm point, low alarm point deadband, high alarm point, high alarm point deadband, off delay, and on delay
Relays: Up to four SPDT, user-configurable contacts rated 100 to 230 VAC, 5 Amp resistive maximum per probe module. Additional relays are available with additional probe modules.
Inputs: Up to 12 analog 0-20 mA, maximum impedance 500 Ohms per probe module. Additional analog inputs are available with additional probe modules.
Outputs: Up to 12 analog 0/4-20 mA, maximum impedance 500 Ohms per probe module. Additional analog outputs with additional probe modules. Optional digital communcations via Modbus® (RS485) and Profibus® DP/V1.
Communication: Modbus® (RS485): Advanced communications/networking with PLC or SCADA system directly from analyzer
Profibus® DP/V1 (certified)
GSM/GPRS Quad-band cellular module (FCC and IC approved, EU and US only)
Ethernet service port, RJ45, 10 MB/s
Mounting Configurations: Surface, panel, and pipe (horizontal and vertical) with optional sun shield
Enclosure Rating: IP65
Material Enclosures: ABS (display module) and metal (probe module) enclosure with corrosion resistant finish
Dimensions Metric (H x W X D): 150 mm x 315 mm x 250 mm
European Certifications: CE per 73/23/EEC and 89/336/EEC
TUV-GS to EN 61010-1
EN 61326 Amd's 1 & 2

3/12/18

Sensor (LDO sc)

Dimensions (D x L): 48.25mm x 254mm

Response time: T90 < 40 s

T95 < 60 s

Flow rate: No flow rate required

Resolution: 0.01 mg/L (ppm) O2/0.1% saturation

Operating temperature: 0 to 50 °C

Pressure range: max. 10 bar

Weight: 1.0 kg

Interferences No interferences by: H2S, pH, K^+, Na^+, Mg^{2+}, Ca^{2+}, $NH4^+$, Al^{3+}, Pb^{2+}, Cd^{2+}, Zn^{2+}, Cr (total), Fe^{2+}, Fe^{3+}, Mn^{2+}, Cu^{2+}, Ni^{2+}, Co^{2+}, CN^-, $NO3^-$, $SO4^{2-}$, S^{2-}, $PO4^{3-}$, Cl^- anionic surfactants, crude oils or Cl2 < 4ppm

Cable length: 10 m

Storage temperature: -20 to 70 °C (95% relative humidity)

Materials Sensor cap: acrylic

Probe body: CPVC, polyurethane, viton, noryl, stainless steel 1.4404 (AISI 316L)

Measuring range: 0 to 20.00 mg/L (ppm) DO, 0 to 200% saturation

Accuracy: Below 5 mg/L O2 0.1 mg/L

Above 5 mg/L O2 0.2 mg/L

Enclosure rating: IP 68

Sensor connector: 1 " NPT external thread

Temperature accuracy: 0.2 °C

Repeatability: 0.1 mg/L

3/12/18

5.3.12 One (1) MLSS meter

- manufacturer	: HACH
- type	: Solitax sc ts-line
- parameters	: Suspended Solids/ turbidity
- measurement procedure	: Solids - Equivalent to DIN 37414 Turbidity DIN EN ISO 7027 DIN EN ISO 7027
-measuring range	: Solids: 0.001 - 50 g/l Turbidity: 0.001 - 4,000 FNU
-accuracy	: Solids - <5% Turbidity <1% or 0.001
- response time	: 1 - 300 sec
- sample temperature	: 0 - 40 °C
- flow rate	: 3 m/s
- immersion depth	: 0.1 - 10 m
- pressure range	: 1 bar
- dimensions (D x L)	: 60 x 200 mm
- housing	: stainless steel
- automatic Cleaning	: With automatic wiper
- cable length	: 10 m fixed, max. 100 m extension cable

5.3.13 One (1) mixer (vertical shaft) in outlet manhole of the tank

- manufacturer	: KARKANIAS SA
- material	: AISI 304
- propeller speed	: 49rpm
Gearmotor	
- manufacturer	: BONFIGLIOLI
- type (gear / motor)	: VF49_28 / P71 BN71B4
- motor speed	: 1400rpm
- power	: 0,37KW
- electrical connections	: 400V, 50Hz

3/12/18

5.4 FLOW DISTRIBUTION CHAMBER II

5.4.1 One (1) overflow weir for flow distribution

- manufacturer : KARKANIAS SA
- material : AISI 304

5.4.2 One (1) valve on pipeline

- manufacturer : GEMAK
- type : gate

5.4.3 One (1) overflow telescopic valve for by pass

- manufacturer : KARKANIAS SA
- material : AISI 304

5.5 FINAL SETTLING TANK

5.5.1 One (1) rotated radial bridge with bottom and surface scrapers

- manufacturer : KARKANIAS SA
- material (scrapers and all submerged parts) : AISI 304
- material (bridge) : hot-dip galvanized steel
- bridge width : 800mm

Gearmotor

- manufacturer : BONFIGLIOLI
- type (gear / motor) : MVF44_86FC_700 / P71 BN71B4
- motor speed : 1400rpm
- power : 0,37KW
- electrical connections : 400V, 50Hz, IP55

5.5.2 One (1) scum skimmer

- manufacturer : KARKANIAS SA
- material : AISI 304

5.5.3 One (1) influent well

- manufacturer : KARKANIAS SA
- material : AISI 304
- dimensions (D x H) : 2500 x 1250 mm

3/12/18

5.5.4 One (1) circumferential overflow weir (V- notch)

- manufacturer	: KARKANIAS SA
- material	: AISI 304
- V dimensions (length x depth x pitch)	: 100 x 50 x 150 mm
- height	: 250 mm

5.5.5 One (1) circumferential scum diaphragm

- manufacturer	: KARKANIAS SA
- material	: AISI 304
- height	: 400 mm

5.6 RETURN ACTIVATED SLUDGE AND EXCESS SULDGE PUMPING STATION

5.6.1 Two (2) submersible pumps for return sludge, one standby

- manufacturer	: WILO
- type	: Rexa PRO C10 DA-518/ EAD0X4-T0035-540-O
- flow	: 99,8m3/h
- head	: 7,7m
- speed	: 1393rpm
- rated power	: 3,45 KW
- power input (duty point)	: 3,75 KW
- maximum power input	: 4,45 KW
- electrical connections	: 400V, 50Hz

5.6.2 Two (2) frequency converters (inverters) for return sludge pumps

- manufacturer	: SIEMENS
- type	: SINAMICS G 120C
- power	: 5,5KW

3/12/18

5.6.3 One (1) electromagnetic inductive flow meter for return sludge

- manufacturer : SIEMENS
- type : Sitrans F M MAG 5100 W (sensor)
  : Sitrans F M MAG 5000

Flow sensor

Flowmeter for water and wastewater treatment plants for compact or separate transmitter. NBR hard rubber lining, integrated grounding and measuring electrodes made of Hastelloy C, flange size according to EN 1092-1, ambient temperature -40 – +70 °C, temperature of medium -10 – +70 °C, flange and flowmeter housing made of painted steel, terminal box with cable gland M20, flash memory to save calibration, verification data of sensor, and save customer-specific settings, degree of protection IP 67, approvals PED-97/23EG, removable part as spare, supply and mount ready-to-operate.

Transmitter

Microprocessor-controlled transmitter in compact or offset design in glass fibre-reinforced polyamide housing with backlight, three-line, alphanumeric display for flow, counter for forward, reverse or net flow, indication of flow direction, comprehensive self-diagnostics for error signalling and recording. Keypad with display unit, leak flow volume suppression, measuring principle with constant field pulsing, automatic zero adjustment, flash memory for automatic recording of calibration and verification data of sensor data as well as customer specific settings, measuring error 0.4 %, simultaneous utilization of analog output 0/4 – 20 mA, pulse output, digital input and output, relay output 24 V DC/1 A, as well as electrical isolation of inputs and outputs. Ambient temperature -20 - +60 °C, power supply 24 V DC, degree of protection IP 67, supply and mount ready-to-operate.

5.6.4 One (1) ultrasonic level meter

- manufacturer : SIEMENS
- type : Sitrans Probe LU

Ultrasonic transducer with 2-wire technology, for detecting the level and volume of liquids and sludge, continuous measuring from 0.3 to 6 m, frequency 54 kHz, communication over 4 – 20 mA / HART, dynamic envelope adjustment for echo analysis, autom. suppression of interfering echo, ambient temperature -40 – +80 °C, integrated temperature compensation, sensor material PVDF copolymer, plastic housing, cable entry 2x M20 x 1.5, process connection screw thread G 2", EEPROM, programming via infrared receiver without opening the device, alphanumeric LC display, operating instructions, handheld programmer, degree of protection IP 67, including mounting bracket made of stainless steel (1.4301), lock nut, supply and mount ready-to-operate.

5.6.5 Two (2) lifting devices (davit) for pumps, one for excess sludge pumps and one for return sludge pumps

- manufacturer : KARKANIAS SA
- material : st37
- lifting capacity : 250kg

3/12/18

5.6.6 Two (2) submersible pumps for excess sludge, one standby

- manufacturer	: WILO
- type	: Rexa PRO V05 DA-222/ EAD1X2-T0025-540-O
- flow	: 26,1m3/h
- head	: 10,1m
- speed	: 2848rpm
- rated power	: 2,5 KW
- power input (duty point)	: 2,2 KW
- maximum power input	: 3,2 KW
- electrical connections	: 400V, 50Hz

5.6.7 Two (2) frequency converters (inverters) for excess sludge pumps

- manufacturer	: SIEMENS
- type	: SINAMICS G 120C
- power	: 4KW

5.6.8 One (1) electromagnetic inductive flow meter for excess sludge

- manufacturer	: SIEMENS
- type	: Sitrans F M MAG 5100 W (sensor)
	: Sitrans F M MAG 5000

Flow sensor

Flowmeter for water and wastewater treatment plants for compact or separate transmitter. NBR hard rubber lining, integrated grounding and measuring electrodes made of Hastelloy C, flange size according to EN 1092-1, ambient temperature -40 – +70 °C, temperature of medium -10 – +70 °C, flange and flowmeter housing made of painted steel, terminal box with cable gland M20, flash memory to save calibration, verification data of sensor, and save customer-specific settings, degree of protection IP 67, approvals PED-97/23EG, removable part as spare, supply and mount ready-to-operate.

Transmitter

Microprocessor-controlled transmitter in compact or offset design in glass fibre-reinforced polyamide housing with backlight, three-line, alphanumeric display for flow, counter for forward, reverse or net flow, indication of flow direction, comprehensive self-diagnostics for error signalling and recording. Keypad with display unit, leak flow volume suppression, measuring principle with constant field pulsing, automatic zero adjustment, flash memory for automatic recording of calibration and verification data of sensor data as well as customer specific settings, measuring error 0.4 %, simultaneous utilization of analog output 0/4 – 20 mA, pulse output, digital input and output, relay output 24 V DC/1 A, as well as electrical isolation of inputs and outputs. Ambient temperature -20 - +60 °C, power supply 24 V DC, degree of protection IP 67, supply and mount ready-to-operate.

3/12/18

5.6.9 One (1) valve on sludge pipeline

- manufacturer	: GEMAK
- type	: gate

5.7 CHEMICAL PHOSPHORUS PRECIPITATION

5.7.1 Three (3) dosing (diaphragm) pumps for phosphorus precipitation chemical solution, one standby, with pipes and valves

- manufacturer	: GRUNDFOS
- type	: DDA30-4
- flow	: 30lt/h
- pressure	: 4bar
- power	: 24W
- electrical connections	: 240V, 50Hz, IP65
- dosing head material	: PVC (Polyvinyl chloride)
- valve ball material	: Ceramic
- gasket material	: FKM
- analog control 0/4-20 mA (scalable)	

5.7.2 One (1) electromagnetic inductive flow meter for phosphorus precipitation chemical solution

- manufacturer	: SIEMENS
- type	: Sitrans F M MAG 5100 W (sensor)
	: Sitrans F M MAG 5000

Flow sensor

Flowmeter for water and wastewater treatment plants for compact or separate transmitter. NBR hard rubber lining, integrated grounding and measuring electrodes made of Hastelloy C, flange size according to EN 1092-1, ambient temperature -40 – +70 °C, temperature of medium -10 – +70 °C, flange and flowmeter housing made of painted steel, terminal box with cable gland M20, flash memory to save calibration, verification data of sensor, and save customer-specific settings, degree of protection IP 67, approvals PED-97/23EG, removable part as spare, supply and mount ready-to-operate.

Transmitter

Microprocessor-controlled transmitter in compact or offset design in glass fibre-reinforced polyamide housing with backlight, three-line, alphanumeric display for flow, counter for forward, reverse or net flow, indication of flow direction, comprehensive self-diagnostics for error signalling and recording. Keypad with display unit, leak flow volume suppression, measuring principle with constant field pulsing, automatic zero adjustment, flash memory for

3/12/18

automatic recording of calibration and verification data of sensor data as well as customer specific settings, measuring error 0.4 %, simultaneous utilization of analog output 0/4 – 20 mA, pulse output, digital input and output, relay output 24 V DC/1 A, as well as electrical isolation of inputs and outputs. Ambient temperature -20 - +60 °C, power supply 24 V DC, degree of protection IP 67, supply and mount ready-to-operate.

5.7.3 One (1) double-walled reservoir for phosphorus precipitation chemical solution, with three level switches

- capacity	: 10.000lt
- material	: HDPE
- dimensions (D x H)	: 2400 x 2800 mm

5.7.4 Two (2) pumps (magnetic driven, plastic, centrifugal) for chemical solution, one standby

- manufacturer	: MPumps
- type	: CM MAG P15
- flow	: 15m3/h
- manometric height	: 12m
- speed	: 2900rpm
- power	: 1,1KW
- electrical connections	: 400V, 50Hz, IP55
- material (body, cover, impeller)	: Polypropylene

3/12/18

6. FILTRATION UNIT

6.1 One (1) overflow penstock for filter tank flow distribution and isolation

- manufacturer : KARKANIAS SA
- dimensions (W x H) : 800 x 500 mm
- material : AISI 304

6.2 One (1) penstock for bypass

- manufacturer : KARKANIAS SA
- dimensions (W x H) : 500 x 500 mm
- material : AISI 304

6.3 One (1) automatic cleaned microscreen rotary drum filter for wastewater tertiary treatment

- manufacturer : IN EKO Team sro
- type : 3FBB
- flow : max 50lt/sec
- overall filtration surface : 3,75m2
- active filtration surface : 2,39m2
- power : 2,37KW
- electrical connections : 400V, 50Hz
- filtration cloth pores (size of mesh) : 40μm
- filtration cloth material : polyamid
- filter material (frame) : AISI 304

<u>drum dimensions</u>

- diameter : 930mm
- length : 1500mm

<u>Tank dimensions</u>

- width : 1150m
- length : 2800m
- height : 1250m

3/12/18

- level switches (3items)
- control cabinet (1item)
- backwashing system
- washing pump (1item)
- drainage (sludge) pump (1item)

Outlet overflow weir

- material : AISI 304

3/12/18

7. UV DISINFECTION UNIT - EFFLUENT

7.1 Two (2) overflow penstocks for UV channel isolation

- manufacturer	: KARKANIAS SA
- dimensions (W x H)	: 612 x 600 mm
- material	: AISI 304

7.2 One (1) UV disinfection automatic cleaned system

- manufacturer	: ULTRAQUA
- type	: MR16-220SS channel
- flow	: 108m3/h (30lt/sec)
- design UV transmittance pr 10 mm, UVT	: 70%
- design UV dose, EOLL	: > 85 mJ/cm2
- calculated UV dose, EOLL	: 86,3 mJ/cm2
- wastewater temperature	: 5 - 35 °C
- fecal Coliforms (F.C.) UV inlet	: 100.000 CFU/100ml
- fecal Coliforms (F.C.) UV outlet	: ≤ 20 CFU/100ml (95% of samples)
- number of UV-lamps	: 16
- reactor material	: AISI316L
- minor parts materials	: PTFE/PVDF/VITON/POM
- water depth	: 1120-1400mm (vertical)
- channel width	: 604 +/-8,0mm
- reactor configuration	: 1 bank with 16 lamps
- lamp type	: low pressure high output amalgam
- lamp life time	: 16000 h
- wire coating	: PTFE
- lamp power pr. Lamp	: 220W
- power	: 3,8 kW
- temperature sensor	: Danfoss pT100

Outlet overflow weir

- material	: AISI 304

3/12/18

Lamp drivers (ballasts)	
no of drivers pr. system	4
product	4x220W UltraAqua 220W series
type	electronic HF modbus controlled
serial communication	modbus Daisy chain RJ45 wiring
power Factor	> 0.98
efficiency	95% at nominal power
continuous monitoring	individual electrical lamp parameters
protection	ground fault, temperature, input voltage
On-board diagnosis	LED indicators
Manufactured in	Holland

Control cabinet	
Material	GFRP (optional Stainless steel AISI304)
HMI	3.4" touch sensitive menu driven screen
System control	PLC
Installation	Wall mount
Cabinet dimension	700x500x300mm
Lamp cable length	5,0m (max length 30,0m)
Lamp cable type	Silicon acc.UL Style 4476 and CSA AWM II A/B
Power supply	3x400VAC+N+Pe,47-63 Hz
Power	3,9 kW @ 100% power level
Temperature	0-45 °C
Thermal control	Forced cooling
Rel. humidity	20-95% non-condensing
Enclosure type	IP54 (Optional IP55-IP68)
Approval	CE
Manufactured in	Denmark

3/12/18

7.3 One (1) ultrasonic flow meter with parshall flume

- manufacturer : SIEMENS
- type : Sitrans LUT 430 (transducer)
  Echomax XRS 5 (sensor)

Ultrasonic transducer with ultrasonic sensor for contactless measurement of fill levels, distances, volumes, flow rates, tendencies or quantities in open sluices, channels or dams with energy saving algorithms and time to spill calculation, preprogrammed arithmetic operations for linearization of Parshall sluices, rectangular sluices, overfall or V dams and half shells, determination of volume as well as control of rainwater, vent pumps and flushing dumps, programming of one universal trace with 40 supporting points, programming by means of local push buttons or EDD or DTM based software, dynamic envelope curve adaptation for echo analysis, automatic suppression of interfering echo, HART communication, data logging, power supply 100 - 230 V AC, output 4 mA – 20 mA, load 600 ohm, 3 relays rated power 5 A at 250 V AC, 2 normally open contacts, 1 changeover contact, accuracy 0.17 %, field enclosure degree of protection IP 65, ambient temperature -20 – +50 °C, LCD display 60 mm x 40 mm with backlighting, parameter backup capability,

Ultrasonic sensor with connecting cable 10 m, measuring range 0.3 – 8 m, beam angle 10°, measuring frequency 44 kHz, degree of protection IP65/IP68, approval according to CE, FM, CSA(US/C), UL, C-TICK, integrated temperature compensation, ambient temperature -20 – +50°C, including operating instructions, mounting material, supply and mount ready-to-operate.

7.4 One (1) automatic station for receiving treated wastewater samples

- manufacturer : HACH
- type : AS950

Sampler

Housing material: Impact resistant ABS plastic, 3-section construction Double-walled base with 2.54 cm insulation, direct ice contact with bottles (Sampler)

Temperature: Operating: 0 - 49 °C
Storage: -40 - 60 °C

Power requirements (Voltage): 12 V DC

Dimensions (W x H x D) Standard Base: 50.5 cm x 69.4 cm

Weight Standard: 15 kg with (24) 1 L Polyethylene bottles

Controller

Housing material: PC/ABS blend, NEMA 4X, 6, IP68, corrosion and ice resistant (Controller)

Display: 1/4 VGA, Colour; self-prompting/menu-driven program

User interface: Membrane switch keypad with 2 multiple function soft keys

Languages user interface: English, French, Spanish, Italian, German, Portuguese, Chinese

Lock function: Access code protection prevents tampering

Memory: Sample history: 4000 records;

3/12/18

Data log: 325,000 records;

Event log: 2000 records

Communication capabilities: USB and optional RS485 (MODBUS)

Inputs: One 0/4-20 mA input for flow pacing

Certifications: CE, UL2

Sample container

(24) 1 L Polyethylene bottles

7.5 One (1) submersible pump for service water tank

- manufacturer	: WILO
- type	: Rexa PRO V05 DA-222/ EAD1X2-T0025-540-O
- flow	: 12,8m3/h
- head	: 13,8m
- speed	: 2848rpm
- rated power	: 2,5 KW
- power input (duty point)	: 1,6 KW
- maximum power input	: 3,2 KW
- electrical connections	: 400V, 50Hz

7.6 Three (3) level switches for submersible pump operation

7.7 One (1) lifting device for submersible pump

- manufacturer	: KARKANIAS SA
- material	: st37
- lifting capacity	: 250kg

7.8 One (1) overflow weir in UV outlet manhole

- manufacturer	: KARKANIAS SA
- material	: AISI 304

3/12/18

8. SLUDGE TREATMENT UNITS

8.1 SLUDGE AEROBIC STABILISATION AND THICKENING TANK

8.1.1 One (1) submersible mixer with lifting device

- manufacturer	: WILO
- type	: TR 36.145-4/12 S17
- propeller diameter	: 250mm
- propeller speed	: 1400rpm
- rated power	: 4,5 KW
- power input (duty point)	: 4,95 KW
- maximum power input	: 5,8 KW
- electrical connections	: 400V, 50Hz

8.1.2 One (1) submersible jet aerator, with one extra pump stock

- manufacturer	: WILO
- type	: J- OXY 250 2/150/95 35(50) Pump FA 20.54E T24 - 4/29K
- air flow	: 620Nm3/hr
- sludge height	: 4,5m
- speed	: 1450rpm
- power	: 25KW
- electrical connections	: 400V, 50Hz
- jet diameter	: 2 * DN150

8.1.3 One (1) ultrasonic level meter

- manufacturer : SIEMENS
- type : Sitrans Probe LU

Ultrasonic transducer with 2-wire technology, for detecting the level and volume of liquids and sludge, continuous measuring from 0.3 to 6 m, frequency 54 kHz, communication over 4 – 20 mA / HART, dynamic envelope adjustment for echo analysis, autom. suppression of interfering echo, ambient temperature -40 – +80 °C, integrated temperature compensation, sensor material PVDF copolymer, plastic housing, cable entry 2x M20 x 1.5, process connection screw thread G 2", EEPROM, programming via infrared receiver without opening the device, alphanumeric LC display, operating instructions, handheld programmer, degree of protection IP 67, including mounting bracket made of stainless steel (1.4301), lock nut, supply and mount ready-to-operate.

3/12/18

8.1.4 Three (3) level switches

8.1.5 One (1) lifting device for jet aerator

- manufacturer	: KARKANIAS SA
- material	: st37
- lifting capacity	: 500kg

8.1.6 Two (2) drainage overflow pipes with gate valves

- manufacturer (pipe / valve)	: KARKANIAS SA / GEMAK
- pipe material	: AISI 304

8.1.7 Two (2) progressing cavity (screw) sludge pumps for feeding holding tank, one standby, with overpressure protection and dry run protection

- manufacturer	: NOV PROCESS (MONO PUMPS)
- type	: C14KC11RMA
- flow	: 6m3/h
- pressure	: 6bar
- speed	: 226rpm
- power	: 3 KW
- electrical connections	: 400V, 50Hz, IP55
- body suction chamber	: CAST IRON-BS EN 1561-EN-GJL-HB195
- stator	: NBR
- rotor	: ALLOY STEEL - ASTM A322 - GRADE 4110
- shaft	: STAINLESS STEL - BS EN 10088-3 GRADE X2CrNi18-9, 1.4307

8.1.8 Two (2) frequency converters (inverters) for sludge pumps

- manufacturer	: SIEMENS
- type	: SINAMICS G 120C
- power	: 3KW

3/12/18

8.2 SLUDGE HOLDING TANK

8.2.1 One (1) submersible mixer with lifting device

- manufacturer	: WILO
- type	: TR 21.145-4/11 S14
- propeller diameter	: 210mm
- propeller speed	: 1390rpm
- rated power	: 1,3 KW
- power input (duty point)	: 1,2 KW
- maximum power input	: 1,74 KW
- electrical connections	: 400V, 50Hz

8.3 SLUDGE MECHANICAL DEWATERING UNIT

8.3.1 Two (2) progressing cavity (screw) sludge pumps for decanter feeding, one standby, with overpressure protection

- manufacturer	: NOV PROCESS (MONO PUMPS)
- type	: C14KC11RMA
- flow	: 6m3/h
- pressure	: 3bar
- speed	: 219rpm
- power	: 2,2 KW
- electrical connections	: 400V, 50Hz, IP55
- body suction chamber	: CAST IRON-BS EN 1561-EN-GJL-HB195
- stator	: NBR
- rotor	: ALLOY STEEL - ASTM A322 - GRADE 4110
- shaft	: STAINLESS STEL - BS EN 10088-3 GRADE X2CrNi18-9, 1.4307

8.3.2 Two (2) frequency converters (inverters) for sludge pumps

- manufacturer	: SIEMENS
- type	: SINAMICS G 120C
- power	: 2,2KW

3/12/18

8.3.3 One (1) electromagnetic inductive flow meter for stabilized/thickened sludge

- manufacturer : SIEMENS
- type : Sitrans F M MAG 5100 W (sensor)
  : Sitrans F M MAG 5000

Flow sensor

Flowmeter for water and wastewater treatment plants for compact or separate transmitter. NBR hard rubber lining, integrated grounding and measuring electrodes made of Hastelloy C, flange size according to EN 1092-1, ambient temperature -40 – +70 °C, temperature of medium -10 – +70 °C, flange and flowmeter housing made of painted steel, terminal box with cable gland M20, flash memory to save calibration, verification data of sensor, and save customer-specific settings, degree of protection IP 67, approvals PED-97/23EG, removable part as spare, supply and mount ready-to-operate.

Transmitter

Microprocessor-controlled transmitter in compact or offset design in glass fibre-reinforced polyamide housing with backlight, three-line, alphanumeric display for flow, counter for forward, reverse or net flow, indication of flow direction, comprehensive self-diagnostics for error signalling and recording. Keypad with display unit, leak flow volume suppression, measuring principle with constant field pulsing, automatic zero adjustment, flash memory for automatic recording of calibration and verification data of sensor data as well as customer specific settings, measuring error 0.4 %, simultaneous utilization of analog output 0/4 – 20 mA, pulse output, digital input and output, relay output 24 V DC/1 A, as well as electrical isolation of inputs and outputs. Ambient temperature -20 - +60 °C, power supply 24 V DC, degree of protection IP 67, supply and mount ready-to-operate.

3/12/18

8.3.4 One (1) centrifuge (decanter) for sludge dewatering

- manufacturer : ALFA LAVAL
- type : ALDEC 45 VDF
- flow : 5m3/h
- solids load : 125kgSS/h
- dewatered sludge solids : 23%

Bowl

Diameter 360 mm

Length 1512 mm

Maximum main speed 4.200 rpm

G-force at operating speed 3.549 g

Material - bowl shell AISI 316

Material - hubs Duplex SS

Material – bolts AISI 316

Beach angle 20°

Wear protection

Solids transportation aids, cylindrical and taper section: Ribs in AISI 316

Solids discharge: Tungsten carbide

Frame and casing

Type frame-casing: Box beam profile with integral casing

Material – frame: Mild steel colour medium blue NCS 3560 R75B

Material casing: SS AISI 316

Wear protection: Wear liner in AISI 304 on discharge area/discharge clarified

Main motor

Type ABB, VFD 15 kW, 3x380V, 50 Hz, IP55 type

Back drive

Type ABB, VFD 5.5 kW , 3x380V, 50 Hz, IP55 type

Gear box

Type Planetary 2 stage

Ratio 1: 159

Max. torque 2,5 kNm

Max differential speed and torque 44 rpm at 2,5 kNm

Differenzial speed conveyor regulation by inverter

Control panel

3/12/18

8.3.5 One (1) automatic preparation device for polyelectrolyte

- manufacturer	: KARKANIAS SA
- type	: TAP 3000K
- capacity	: max3000lt/h
- total capacity of three chambers	: 3*1000lt
- capacity of powder hopper	: 50 lt
- material	: AISI 304
- flocculant's concentration	: 0,05 – 0,5%

Powder dosing with variable speed by inverter

Three (3) propellers

- material	: AISI 304

1st propeller gear motor

- manufacturer	: BONFIGLIOLI
- type (motor / gear)	: BN 100LB / S401 F_1.9
- propeller speed	: 350rpm
- power	: 1,1KW

2nd propeller gear motor

- manufacturer	: BONFIGLIOLI
- type (motor / gear)	: P71 BN71B4 / VF44_7
- propeller speed	: 196rpm
- power	: 0,37KW

3rd propeller gear motor

- manufacturer	: BONFIGLIOLI
- type (motor / gear)	: P71 BN71B4 / VF44_14
- propeller speed	: 98rpm
- power	: 0,37KW
- electrical connections	: 400V, 50Hz

one pressure regulator, one electrovalve, one ball valve, one flowmeter, one manometer

Three level switches

Control panel

3/12/18

8.3.6 Two (2) progressing cavity (screw) pumps for dosing polyelectrolyte, one standby, with overpressure protection

- manufacturer	: NOV PROCESS (MONO PUMPS)
- type	: C14KC11RMA
- flow	: 650lt/h
- pressure	: 3bar
- speed	: 421rpm
- power	: 0,75 KW
- electrical connections	: 400V, 50Hz, IP55
- body suction chamber	: CAST IRON-BS EN 1561-EN-GJL-HB195
- stator	: NBR
- rotor	: STAINLESS STEEL - BS EN 10088-3 GRADE X2CrNiMo17-12-2, 1.4404
- shaft	: STAINLESS STEL - BS EN 10088-3 GRADE X2CrNiMo17-12-2, 1.4404

8.3.7 Two (2) frequency converters (inverters) for polyelectrolyte dosing pumps

- manufacturer	: SIEMENS
- type	: SINAMICS G 120C
- power	: 0,75KW

8.3.8 One (1) electromagnetic inductive flow meter for polyelectrolyte solution

- manufacturer	: SIEMENS
- type	: Sitrans F M MAG 5100 W (sensor)
	: Sitrans F M MAG 5000

Flow sensor

Flowmeter for water and wastewater treatment plants for compact or separate transmitter. NBR hard rubber lining, integrated grounding and measuring electrodes made of Hastelloy C, flange size according to EN 1092-1, ambient temperature -40 – +70 °C, temperature of medium -10 – +70 °C, flange and flowmeter housing made of painted steel, terminal box with cable gland M20, flash memory to save calibration, verification data of sensor, and save customer-specific settings, degree of protection IP 67, approvals PED-97/23EG, removable part as spare, supply and mount ready-to-operate.

Transmitter

Microprocessor-controlled transmitter in compact or offset design in glass fibre-reinforced polyamide housing with backlight, three-line, alphanumeric display for flow, counter for forward, reverse or net flow, indication of flow direction, comprehensive self-diagnostics for error signalling and recording. Keypad with display unit, leak flow volume suppression,

3/12/18

measuring principle with constant field pulsing, automatic zero adjustment, flash memory for automatic recording of calibration and verification data of sensor data as well as customer specific settings, measuring error 0.4 %, simultaneous utilization of analog output 0/4 – 20 mA, pulse output, digital input and output, relay output 24 V DC/1 A, as well as electrical isolation of inputs and outputs. Ambient temperature -20 - +60 °C, power supply 24 V DC, degree of protection IP 67, supply and mount ready-to-operate.

8.3.9 One (1) screw conveyor for dewatered sludge

- manufacturer	: KARKANIAS SA
- type	: SC
- power	: 1,5KW
- electrical connections	: 400V, 50Hz
- trough material	: AISI304
- screw material	: S355

8.3.10 Two (2) containers for dewatered sludge

- manufacturer	: VAN
- type	: NM-5V
- capacity	: 5m3
- dimensions (W x L x H)	: 1700 x 3000 x 1250mm

8.3.11 One (1) sludge container chassis with electric drive

- manufacturer	: KARKANIAS SA
- loading capacity	: 9tn

8.3.12 One (1) fan for ventilation of sludge dewatering building

- manufacturer	: Soler & Palau (S&P)
- type	: HCFT/4-400/H
- flow	: 5070 m3/hr
- speed	: 1350 rpm
- power	: 300W
- electrical connections	: 400V, 50Hz

8.3.13 One (1) lifting device (overhead crane) for dewatering equipment

- manufacturer	: KARKANIAS SA
- lifting capacity	: 1600kg

3/12/18

9. SERVICE WATER UNIT

9.1 One (1) automatic pressure station with two (one standby) centrifugal pumps for service water

- manufacturer	: EBARA
- type	: EVMSG15 6N5
- flow	: 21m3/h
- pressure	: 6bar
- speed	: 2900rpm
- power	: 5,5KW
- electrical connections	: 400V, 50Hz
- material (body/impellers/shaft)	: AISI304/AISI304/AISI316

Frequency converters (inverters), two items

- manufacturer	: DAB
- type	: MCE/P55
- power	: 5,5KW

Pressure vessels, two items

- capacity	: 18lt

Analog pressure transmitter

Control panel

3/12/18

10. TRANSFORMER STATION, POWER SWITCHBOARDS, BACKUP POWER SUPPLY

10.1 Medium Voltage Switchboard

- Enclosure manufacturer & montage	: GERO S.A.
- Incoming unit	: ABB, DRC_500
	With measurement and busbar earthing
- Switch disconnector	: ABB, SFC_500

10.2 Transformer

- Manufacturer	: ABB
- Rated power	: 500 kVA
- Primary voltage	: 10 kV
- Secondary voltage	: 400 V
- Frequency	: 50 Hz
- Oil weight	: 340 Kg
- Cooling	: ONAN

Standard accessories

Bucholz Relay CH/O

Off circuit tap changer on primary winding

Wheels

Dehydrating breather

Thermometer with 2 contactors

Magnetic Oil level indicator (w/o) contactors

Terminals for LV bushing/Flags

10.3 Low Voltage Main Distribution Switchboard

- Manufacturer	: GERO S.A.
-Switchgear manufacturer	: ABB

10.4 Two (2) Power Distribution Switchboards (PDC)

- Manufacturer	: GERO S.A.
- Switchgear manufacturer	: ABB
- Installation of PDC 1	: Blowers building
- Installation of PDC 2	: Sludge dewatering building

3/12/18

10.5 Backup Power Supply Unit

- Manufacturer	: KAPELOS DIESELS S.A.
- Type	: 210 kVA Standby Power on Trailer
Engine	
- Manufacturer	: John Deere
- Number of cylinders	: 6
- Displacement	: 6800 cm^3
- Stand By output, according to ISO3046	: 245 HP (183KW) at 1500 RPM
Alternator	
- Manufacturer	: Marelli
- Continuous output	: 185 KVA, 400V, 50Hz
- Standby output	: 205 KVA, 400V, 50Hz

Fuel tank: 220 l built-in the chassis, 2000l in stationary container

Automatic Control Panel for Standby use

- Control panel is made from metal sheet, epoxy painted with front door for easy inspection and repair.
- Automatic Mains Failure Controller
- The D500L is next generation genset control units combining multi-functionality and wide communication possibilities together with a reliable and low cost design.
- The unit complies and mostly exceeds world's tightest safety, EMC, vibration and environmental standards for the industrial category.
- Software features are complete with easy firmware upgrade process through USB port.
- The Windows based PC software allows monitoring and programming through USB, serial and GPRS.
- The PC based Rainbow Scada software allows monitoring and control of an unlimited number of gensets from a single central location.

Canopy

The canopy is designed and built to provide a perfect cooling for the engine, even for tropical ambient application. Noise level 67 dBA ±3 at 7 m.

Trailer

The complete gen set is equipped with trailer, including mechanical disk brake with auto-reverse. Directional stability and low maintenance coil spring.

3/12/18

11. AUTOMATION SYSTEM & SCADA

11.1 PLC 01 in Blower house

- Manufacturer	: Siemens
- Type	: Simatic S7-1500
- CPU	: 1515-2PN
- Working memory for program	: 500 kB
- Working memory for data	: 3 MB
- Total number of Digital Inputs	: 160
- Total number of Digital Outputs	: 64 (24 VDC/0,5A)
- Total number of Analog Inputs	: 24
- Total number of Analog Outputs	: 12

11.2 Touch Panel 01 in Blower house

- Manufacturer	: Siemens
- Type	: Simatic TP1200 Comfort
- Screen size	: 12" – 16 mil Colors
- Memory	: 12 MB

11.3 PLC 02 in Sludge dewatering building

- Manufacturer	: Siemens
- Type	: Simatic S7-1500
- CPU	: 1515-2PN
- Working memory for program	: 500 kB
- Working memory for data	: 3 MB
- Total number of Digital Inputs	: 224
- Total number of Digital Outputs	: 96 (24 VDC/0,5A)
- Total number of Analog Inputs	: 24
- Total number of Analog Outputs	: 16

3/12/18

11.4 Touch Panel 02 in Sludge dewatering building

- Manufacturer : Siemens
- Type : Simatic TP1200 Comfort
- Screen size : 12" – 16 mil Colors
- Memory : 12 MB

11.5 SCADA

- Manufacturer : Siemens

For each (of two redundant) server

WINCC SYSTEMSOFTWARE V7.4, RT 2048 (2048 POWER TAGS),
WINCC/SERVER V7.4, OPTION F. WINCC V7.4, RUNTIME-SW

For both servers

WINCC/REDUNDANCY V7.4, OPTION F. WINCC V7.4, RUNTIME-SW

For each (of two) client

WINCC SYSTEMSOFTWARE V7.4, RT 128 (128 POWER TAGS), RUNTIME-SW

11.6 Servers, 2 pcs

- Manufacturer : HP
- Model : Workstation Z240 SFF
- Processor : Intel Core i7 6700 3,4,GHz (Quad Core)
- RAM : 8 GB DDR4 SDRAM
- Cache Memory : 8 MB
- Hard drive : 1 TB – SATA 6 Gb/s
- Graphics controller : Intel HD Graphics 530
- Monitors : LG Monitor 25UM58-P (25")

3/12/18

11.7 Clients, 2 pcs

- Manufacturer	: HP
- Model	: Workstation Z240 MT
- Processor	: Intel Core i5 6600 3,3,GHz (Quad Core)
- RAM	: 8 GB DDR4 SDRAM
- Cache Memory	: 6 MB
- Hard drive	: 1 TB – SATA 6 Gb/s
- Graphics controller	: Intel HD Graphics 530
- Monitors	: LG Monitor 25UM58-P (25")

11.8 Printer A4

- Manufacturer	: Samsung
- Model	: MFP Laser Color SL-C480 N

11.9 Printer A3+

- Manufacturer	: Epson
- Model	: L1300

11.10 UPS

- Manufacturer	: Delta Electronics
- Model	: Amblon

KARKANIAS ENVIRONMENTAL TECHNOLOGY S.A.
INDUSTRIAL AREA OF LARISA - GREECE
POSTAL CODE 41004, BOX 3053
TEL.: +30 2410 541386 - FAX: +30 2410 541354
Email: info@karkanias.gr
TAX NUMBER: 095244711
REGISTRATION NUMBER: 48779/31/B/01/12

GEORGIOS KARKANIAS
PRESIDENT

3/12/18

Proposed Facility List

KARKANIAS
ENVIRONMENTAL TECHNOLOGY S.A.

A/A	Facility	Item	Size
1	Inlet and Overflow Manhole	Surface	56,10 m^2
		Depth	5,99 m
2	Septage Unit	Surface	8,40 m^2
		Volume	24,36 m^3
3	Pumping Station	Length	11,75 m
		Width	4,45 m
		Depth	8,34 m
4	Mechanical Wastewater Pretreatment Unit	Length	7,00 m
		Width	1,80 m
5	Flow Distribution Chamber I	Surface	28,27 m^2
		Volume	112,81 m^3
6	Predenitrification Tank	Surface	72,60 m^2
		Volume	363,00 m^3
7	Circulating Activated Sludge Tank	Surface	266,80 m^2
		Volume	1.334,00 m^3
8	Flow Distribution Chamber II	Surface	28,27 m^2
		Volume	113,66 m^3
9	Final Setling Tank	Surface	153,94 m^2
		Volume	619,14 m^3
10	Return Activated Sludge and Excess Suldge Pumping Station	Surface	18,55 m^2
		Volume	79,77 m^3
11	Chemical Phosphorus Precipiation	Length	5,10 m
		Width	2,80 m
		Surface	14,28 m^2
12	Filtration Unit	Length	5,80 m
		Width	3,85 m
		Depth	0,78 m

3/12/18

GEORGIOS KARKANIAS
PRESIDENT

A/A	Facility	Item	Size
13	UV Disinfection Unit - Effluent	Length	5,00 m
		Width	2,25 m
		Depth	1,33 m
14	Flow Measurement Channel	Length	7,05 m
		Width	0,50 m
		Depth	0,29 m
15	Sludge Aerobic Stabilisation and Technical Tank	Surface	314,16 m^2
		Volume	1.413,72 m^3
16	Sludge Holding Tank	Surface	78,54 m^2
		Volume	3,10 m^3
17	Sludge Mechanical Dewatering Unit	Length	19,40 m
		Width	6,00 m
		Surface	116,40 m^2
18	Service Water Unit (tank)	Surface	2,25 m^2
		Volume	5,63 m^3
19	Service Water Unit (Room)	Length	5,10 m
		Width	2,05 m
		Surface	10,46 m^2
20	Operating Building	Length	10,35 m
		Width	15,90 m
		Surface	164,57 m^2
21	Blower House	Length	14,10 m
		Width	4,50 m
		Surface	63,45 m^2
22	Transformer Station Building	Length	7,90 m
		Width	3,40 m
		Surface	26,86 m^2

3/12/18

GEORGIOS KARKANIAS
PRESIDENT

A/A	Facility	Item	Size
23	Septage Unit Building	Length	4,75 m
		Width	4,50 m
		Surface	21,38 m^2
24	Road Surfase	Surface	1.690,76 m^2
25	Fence	Length	417,00 m

GEORGIOS KARKANIAS
PRESIDENT

3/12/18

3/12/18

Technical Offer

Process Design

KARKANIAS ENVIRONMENTAL TECHNOLOGY S.A.
INDUSTRIAL AREA OF LARISA - GREECE
POSTAL CODE 41004, BOX 3053
TEL : +30 2410 541386 - FAX: +30 2410 541354
Email: info@karkanias.gr
TAX NUMBER: 095244711
REGISTRATION NUMBER: 46779/31/B/01/12

GEORGIOS KARKANIAS
PRESIDENT

3/12/18

Design Data

			1st STAGE	1st STAGE	2nd STAGE	2nd STAGE	Start up	Start up
Population equivalent			6000 PE	6000	12000	12000	3900	3900
			Summer	Winter	Summer	Winter	Summer	Winter
Hydraulic loads								
Average Dry Weather Daily Flow		Q_{ADF}	**898,60 m3/d**	**898,60**	**1797,20**	**1797,20**	**584,1**	**584,1**
			37,4 m3/hr	37,4	74,9	74,9	24,3	24,3
			10,4 l/s	10,4	20,8	20,8	6,8	6,8
Maximum Dry Weather Daily Flow		Q_{MDF}	**1261,40 m3/d**	**1261,40**	**2522,80**	**2522,80**	**819,9**	**819,9**
			52,6 m3/hr	52,6	105,1	105,1	34,2	34,2
			14,6 l/s	14,6	29,2	29,2	9,5	9,5
Maximum Dry Weather Hourly Flow		Q_{MHF}	**78,80 m3/hr**	**78,80**	**157,60**	**157,60**	**51,2**	**51,2**
			21,9 l/s	21,9	43,8	43,8	14,2	14,2
Wet Weather Flow		Q_{WWF}	**94,60 m3/hr**	**94,60**	**189,20**	**189,20**	**94,60**	**94,60**
			26,3 l/s	26,3	52,6	52,6	26,3	26,3
Maximum Wet Weather Daily Flow		**Qmax**	**2270,40 m3/d**	**2270,40**	**4540,80**	**4540,80**	**2270,40**	**2270,40**
			94,60 m3/hr	94,60	189,20	189,20	94,60	94,60
Pollutant loads								
BOD5 inlet		BODsi	360,00 Kg/d	360,00	720,00	720,00	234,00	234,00
	for Q_{MHF}		400,6 mg/l	400,6	400,6	400,6	400,6	400,6
BOD5 design inlet		**BODsimax**	**360,00 Kg/d**	**360,00**	**720,00**	**720,00**	**234,00**	**234,00**
			400,6 mg/l	**400,6**	**400,6**	**400,6**	**400,6**	**400,6**
BOD5 outlet		BODse	25,0 mg/l	25,0	25,0	25,0	25,0	25,0
			22,47 Kg/d	22,47	44,93	44,93	14,60	14,60
COD5 inlet		CODi	720,00 Kg/d	720,00	1440,00	1440,00	468,00	468,00
	for Q_{MHF}		801,2 mg/l	801,2	801,2	801,2	801,2	801,2
COD5 design inlet		**CODimax**	**720,00 Kg/d**	**720,00**	**1440,00**	**1440,00**	**468,00**	**468,00**
			801,2 mg/l	**801,2**	**801,2**	**801,2**	**801,2**	**801,2**
COD5 outlet		CODe	125,0 mg/l	125,0	125,0	125,0	125,0	125,0
			112,33 Kg/d	112,33	224,65	224,65	73,01	73,01
SS inlet		Ssi	420,00 Kg/d	420,00	840,00	840,00	273,00	273,00
	for Q_{MHF}		467,4 mg/l	467,4	467,4	467,4	467,4	467,4
SS design inlet		**SSimax**	**420,00 Kg/d**	**420,00**	**840,00**	**840,00**	**273,00**	**273,00**
			467,4 mg/l	**467,4**	**467,4**	**467,4**	**467,4**	**467,4**
SS secondary treatment outlet		SSbe	25,0 mg/l	25,0	25,0	25,0	25,0	25,0
			22,47 Kg/d	22,47	44,93	44,93	14,60	14,60
SS outlet		SSe	10,0 mg/l	10,0	10,0	10,0	10,0	10,0
			8,99 Kg/d	8,99	17,97	17,97	5,84	5,84
TN inlet		TNi	66,00 Kg/d	66,00	132,00	132,00	42,90	42,90
	for Q_{MHF}		73,4 mg/l	73,4	73,4	73,4	73,4	73,4
TN design inlet		**TNimax**	**66,00 Kg/d**	**66,00**	**132,00**	**132,00**	**42,90**	**42,90**
			73,4 mg/l	**73,4**	**73,4**	**73,4**	**73,4**	**73,4**
N_NH4 outlet		N_NH4e	2,0 mg/l	2,0	2,0	2,0	2,0	2,0
			1,80 Kg/d	1,80	3,59	3,59	1,17	1,17
N_NO3 outlet		N_NO3e	11,0 mg/l	11,0	11,0	11,0	11,0	11,0
			9,88 Kg/d	9,88	19,77	19,77	6,43	6,43
Organic nitrogen outlet		Norge	2,0 mg/l	2,0	2,0	2,0	2,0	2,0
			1,80 Kg/d	1,80	3,59	3,59	1,17	1,17
TN outlet		TNe	15,00 mg/l	15,00	15,00	15,00	15,00	15,00
			13,48 Kg/d	13,48	26,96	26,96	8,76	8,76

GEORGIOS KARKANIAS
PRESIDENT

3/12/18

P inlet		Pi	10,80 Kg/d	10,80	21,60	21,60	7,02	7,02
	for Q_{MHF}		12,0 mg/l	12,0	12,0	12,0	12,0	12,0
P design inlet		**Pimax**	**10,80 Kg/d**	**10,80**	**21,60**	**21,60**	**7,02**	**7,02**
			12,0 mg/l	**12,0**	**12,0**	**12,0**	**12,0**	**12,0**
P outlet		Pe	2,0 mg/l	2,0	2,0	2,0	2,0	2,0
			1,80 Kg/d	1,80	3,59	3,59	1,17	1,17

GEORGIOS KARKANIAS
PRESIDENT

3/12/18

Septage Unit

Automatic cleaned fine screen, drum with screenings screw

Septage tank

Dimensions :

Liquid height	HΔB	2,90 m
Length	LΔB	4,00 m
Width	WΔB	3,00 m
Effective tank volume	VΔB	34,80 m3

GEORGIOS KARKANIAS
PRESIDENT

3/12/10

Inlet Pumping Station

		1st STAGE 6000 PE Summer	1st STAGE 6000 Winter	2nd STAGE 12000 Summer	2nd STAGE 12000 Winter	Start up 3900 Summer	Start up 3900 Winter
Pumping station volume							
Vps=(0,9*n*Qp)/nps							
Pumping station effective volume	Vps						
Pumps number (in operation)	n	2	2	4	4	2	2
Pump flow	Qp	14,28 lt/sec	14,28	14,28	14,28	14,28	14,28
Max number of pump starts	nps	8	8	8	8	8	8
Minimum pumping station effective volume	Vps	3,21 m3	3,21	6,43	6,43	3,21	3,21

GEORGIOS KARKANIS
PRESIDENT

3/12/18

Predenitrification tank

		1st STAGE 6000 PE Summer	1st STAGE 6000 Winter	2nd STAGE 12000 Summer	2nd STAGE 12000 Winter	Start up 3900 Summer	Start up 3900 Winter
Average Dry Weather Daily Flow	Q_{ADF}	898,60 m3/d	898,60	1797,20	1797,20	584,10	584,10
		37,4 m3/h	37,4	74,9	74,9	24,3	24,3
Maximum Wet Weather Daily Flow	Qmax	2270,40 m3/d	2270,40	4540,80	4540,80	2270,40	2270,40
		94,60 m3/h	94,60	189,20	189,20	94,60	94,60
Sludge Recirculation Flow (100%Qmax)	Qr	94,60 m3/h	94,60	189,20	189,20	94,60	94,60
Wet Weather Flow	Q_{WWF}	94,6 m3/h	94,6	189,2	189,2	94,6	94,6
Min retention time for flow Q'=Qmax+Qr	t	1,90 hr	1,90	1,90	1,90	1,90	1,90
		114,0 min	114,0	114,0	114,0	114,0	114,0
Demanded tank volume, (t*Q')	Vd	359,48 m3	359,48	718,96	718,96	359,48	359,48
Number of tanks	η1	1	1	2	2	1	1
Number of tanks in operation	η2	1	1	2	2	1	1
Tank dimensions:							
Liquid height	H	5,00 m	5,00	5,00	5,00	5,00	5,00
Length	L	13,20 m	13,20	13,20	13,20	13,20	13,20
Width	W	5,50 m	5,50	5,50	5,50	5,50	5,50
Effective tank volume	Vd	363,00 m3	363,00	363,00	363,00	363,00	363,00
Total effective tanks volume	Vd,tot	363,00 m3	363,00	726,00	726,00	363,00	363,00
Retention time for Q_{ADF}+Qr		164,95 min	164,95	164,95	164,95	183,12	183,12
Retention time for Qmax+Qr		115,12 min	115,12	115,12	115,12	115,12	115,12
Retention time for Q_{WWF}+Qr		115,12 min	115,12	115,12	115,12	115,12	115,12

3/12/18

GEORGIOS KARKANIAS
PRESIDENT

Circulating activated sludge tank

		1st STAGE 6000 PE Summer	1st STAGE 6000 Winter	2nd STAGE 12000 Summer	2nd STAGE 12000 Winter	Start up 3900 Summer	Start up 3900 Winter
Average Dry Weather Daily Flow	Q_{AD}	898,60 m^3/d	898,60	1797,20	1797,20	584,10	584,10
Maximum Wet Weather Daily Flow	Qmax	2270,40 m^3/d	2270,40	4540,80	4540,80	2270,40	2270,40
BOD5 inlet	BOD_5i	360,00 Kg/d	360,00	720,00	720,00	234,00	234,00
		400,6 mg/l	400,6	400,6	400,6	400,6	400,6
BOD_5 outlet	BOD_5e	25,00 mg/l	25,00	25,00	25,00	25,00	25,00
SS outlet	SSe	25,00 mg/l	25,00	25,00	25,00	25,00	25,00
Percentage of volatile solids		0,70	0,70	0,70	0,70	0,70	0,70
Volatile solids outlet	VSSe	17,50 mg/l	17,50	17,50	17,50	17,50	17,50
BODL volatile solids VSSe(mg/l) * (grBODL/grVSS)	BOD_{Lvsse}	1,42 gr/gr VSS	1,42	1,42	1,42	1,42	1,42
		24,85 mg/l	24,85	24,85	24,85	24,85	24,85
BOD5 volatile solids (BOD5vsse = 0,68 * BODLvsse)	BOD5vsse	16,90 mg/l	16,90	16,90	16,90	16,90	16,90
Soluble BOD5 outlet (BOD_5e - BOD_5vsse)		8,10 mgBOD5/l	8,10	8,10	8,10	8,10	8,10
Removed BOD5 (BOD5i- soluble BOD5e)		392,52 mg/l	392,52	392,52	392,52	392,51	392,51
		352,72 Kg/d	352,72	705,44	705,44	229,27	229,27
Wastewater temperature	T	22,00 °C	8,00	22,00	8,00	22,00	8,00
Specific growth rate of nitrifying bacteria, $[\mu_N = \mu_N' * N/(K_N + N)]$	μ_N	0,54 d^{-1}	0,18	0,54	0,18	0,54	0,18
Outlet concentration N-NH_4^+	N	2,00 mg/l	2,00	2,00	2,00	2,00	2,00
Max value of μ_N $\mu_N' = 0,4 \exp[0,098(T-15)]$	μ_N'	0,79 d^{-1}	0,20	0,79	0,20	0,79	0,20
Value of N, for which $\mu_N = 1/2\ \mu_N'$, $[K_N = 10^{(0,051T-1,158)}]$	K_N	0,92 mg/l	0,18	0,92	0,18	0,92	0,18
Endogenous decay coefficient for nitrifying organisms	k_{dN}	0,065 d^{-1}	0,050	0,065	0,050	0,065	0,050
Min sludge age for complete nitrification ($\theta cm = 1/(\mu_N - k_{dN})$	θcm	2,09 d	7,41	2,09	7,41	2,09	7,41
Safety factor		2,00	2,00	2,00	2,00	2,00	2,00
Demanded sludge age for complete nitrification ($\theta c = 2 * \theta cm$)	θc	4,18 d	14,82	4,18	14,82	4,18	14,82
Selected total sludge age θc		20,00 d	20,00	20,00	20,00	20,00	20,00
Biomass yield	Y	0,85 grVSS/grBOD5	0,78	0,85	0,78	0,85	0,78
Endogenous decay coefficient	kd	0,065 d^{-1}	0,050	0,065	0,050	0,065	0,050
Removed BOD5	Sr	352,72 Kg/d	352,72	705,44	705,44	229,27	229,27
		392,52 mg/l	392,52	392,52	392,52	392,51	392,51
VSS percentage, residual endogenous metabolism	β	0,15	0,15	0,15	0,15	0,15	0,15
Percentage of nitrifying bacteria	f	0,050	0,050	0,050	0,050	0,050	0,050
Inlet suspended solids	Xo	420,00 Kg/d	420,00	840,00	840,00	273,00	273,00
		467,4 mg/l	467,4	467,4	467,4	467,4	467,4
Organic fraction of inlet suspended solids	fo	0,70	0,70	0,70	0,70	0,70	0,70
Fraction of non-biodegradable organic in inlet suspended solids	α	0,10	0,10	0,10	0,10	0,10	0,10
Produced biomass due to the development of heterotrophic bacteria $Y * Sr * \theta c / (1 + kd * \theta c)$	X_B	2607,06 Kg	2751,21	5214,11	5502,42	1694,59	1788,29
Organic solids residual endogenous metabolism (cell debris) $Y * Sr * \theta c * \beta * kd * \theta c / (1 + kd * \theta c)$	X_K	508,38 Kg	412,68	1016,75	825,36	330,44	268,24
Produced biomass due to the development of autotrophic bacteria $[f / (1-f)] * Y * Sr * \theta c / (1+kd*\Theta c)$	X_N	137,21 Kg	144,80	274,43	289,60	89,19	94,12
Inlet inorganic solids $(1-fo) * Xo * \theta c$	Xoa	2520,00 Kg	2520,00	5040,00	5040,00	1638,00	1638,00
Non-biodegradable inlet organic solids $\alpha * fo * Xo * \theta c$	X_A	588,00 Kg	588,00	1176,00	1176,00	382,20	382,20
Solids in bioreactor	M	6360,65 Kg	6416,69	12721,29	12833,39	4134,42	4170,85
Volatile Solids in bioreactor	Mv	3840,65 Kg	3896,69	7681,29	7793,39	2496,42	2532,85
Mv / M		0,6	0,6	0,6	0,6	0,6	0,6
MLSS concentration	X	4,00 Kg/m^3	4,00	4,00	4,00	4,00	4,00
MLVSS concentration [Xv = (Mv / M) * X]	Xv	2,4 Kg/m^3	2,4	2,4	2,4	2,4	2,4
Demanded total volume (anoxic and aerobic) (MLSS in bioreactor) / (MLSS concentration)	VT	1590,16 m^3	1604,17	3180,32	3208,35	1033,60	1042,71
Denitrification							
Total nitrogen in inlet	TNi	66,00 Kg/d	66,00	132,00	132,00	42,90	42,90
N_NH4 outlet	N_NH_4e	2,00 mg/l	2,00	2,00	2,00	2,00	2,00
		1,80 Kg/d	1,80	3,59	3,59	1,17	1,17
N_NO3 outlet	N_NO_3e	11,00 mg/l	11,00	11,00	11,00	11,00	11,00
		9,88 Kg/d	9,88	19,77	19,77	6,43	6,43
Organic nitrogen in outlet	Norge	2,00 mg/l	2,00	2,00	2,00	2,00	2,00
		1,80 Kg/d	1,80	3,59	3,59	1,17	1,17
Nitrogen for biomass synthesis (15%*TNi)	Nsyn	9,90 Kg/d	9,90	19,80	19,80	6,44	6,44
BOD5 removal efficiency. (Sr/ BOD5i)	E	0,980	0,980	0,980	0,980	0,980	0,980
Nitrogen to nitrification (TNo - N_NH_4e - Nσυνθ - Nοργε)	**Nr**	**52,51 $KgN\_NH_4^+/d$**	**52,51**	**105,01**	**105,01**	**34,13**	**34,13**
Nitrogen to denitrification (Nar = Nr - N_NO_3e)	**Nar**	**42,62 KgNO3_N/d**	**42,62**	**85,24**	**85,24**	**27,70**	**27,70**
Universal gas constant	R	1,9872	1,9872	1,9872	1,9872	1,9872	1,9872
Design temperature	T	22,00 °C	8,00	22,00	8,00	22,00	8,00
T (°K) = T (°C) + 273		295,00 °K	281,00	295,00	281,00	295,00	281,00
Specific denitrification rate at T (°K). $UDN = 6,4 \times 10^{10} \times \exp(-15880/RT)$	UDN	0,1101 KgN_NO3/kgMLVSS_d	0,0286	0,1101	0,0286	0,1101	0,0286
		0,0046 KgN_NO3/kgMLVSS_h	0,0012	0,0046	0,0012	0,0046	0,0012
Demanded denitrification volume, VAZT = Nar / (UDN*Xv)		161,04 m^3	616,26	322,08	1232,52	113,73	432,50

3/12/18

GEORGIOS KARKANIAS
PRESIDENT

Aeration							
Bioreactors (oxidation ditches) number	η1	1,00	1,00	2,00	2,00	1,00	1,00
Bioreactors number (in operation)	η2	1,00	1,00	2,00	2,00	1,00	1,00
Number of corridors per bioreactor	η3	2,00	2,00	2,00	2,00	2,00	2,00
Total corridors	η	2,00	2,00	4,00	4,00	2,00	2,00
Dimensions:							
Liquid height	HA	5,00 m	5,00	5,00	5,00	5,00	5,00
Corridor aligned length	LA1	21,00 m	21,00	21,00	21,00	21,00	21,00
Max aligned length of oxidation ditch	LA2	30,40 m	30,40	30,40	30,40	30,40	30,40
Corridor width	WA	4,50 m	4,50	4,50	4,50	4,50	4,50
Effective bioreactor volume	VA	1269,80 m^3	1269,80	1269,80	1269,80	1269,80	1269,80
Total effective bioreactors volume	VA'	1269,80 m^3	1269,80	2539,60	2539,60	1269,80	1269,80
Total effective bioreactors volume	**VAT**	**1269,80 m^3**	**1269,80**	**2539,60**	**2539,60**	**1269,80**	**1269,80**
Total effective predenitrification tanks volume	**VAZT**	**363,00 m^3**	**363,00**	**726,00**	**726,00**	**363,00**	**363,00**
Total effective volume (predenitrification - denitrification - aeration)							
VT=VAT	**VT**	**1632,80 m^3**	**1632,80**	**3265,60**	**3265,60**	**1632,80**	**1632,80**
Percentage of anoxic volume to total anoxic plus aerobic volume in oxidation ditch		25,00%	25,00%	25,00%	25,00%	25,00%	25,00%
Anoxic volume in oxidation ditch (denitrification)	VAZT'	408,20 m^3	408,20	816,40	816,40	408,20	408,20
Total anoxic volume (denitrification with predenitrification)	VAZT	771,20 m^3	771,20	1542,40	1542,40	771,20	771,20
Total aeration volume	VZAT	1224,60 m^3	1224,60	2449,20	2449,20	1224,60	1224,60
Hydraulic retention time in bioreactors θ1= VT / Qmax	θ1	17,26 h	17,26	17,26	17,26	17,26	17,26
		0,72 d	0,72	0,72	0,72	0,72	0,72
Hydraulic retention time in bioreactors θ2= VT / Q ADF	θ2	43,61 h	43,61	43,61	43,61	67,09	67,09
		1,82 d	1,82	1,82	1,82	2,80	2,80
MLSS concentration	X	4000 mg/l	4000	4000	4000	4000	4000
Sludge age θc is calculated from the equation βελος: $X = ((Y*Sr*\theta c)/(1+kd*\theta c))*(1+\beta*kd*\theta c+(f/(1-f))) + fo*Xo*\theta c*((1-fo)/fo+\alpha)$							
Total sludge age	**θc**	**20,68 d**	**20,44**	**20,68**	**20,44**	**35,63**	**35,02**
Volumetric BOD loading (BOD5i/VT)	**Cv**	**0,22 Kg BOD_5/m^3.d**	**0,22**	**0,22**	**0,22**	**0,14**	**0,14**
Food to microorganism ratio	**F / M**	**0,06 Kg BOD_5/Kg MLSS.d**	**0,06**	**0,06**	**0,06**	**0,04**	**0,04**
	F / Mv	0,09 Kg BOD_5/Kg MLVSS.d	0,09	0,09	0,09	0,06	0,06
Solids in bioreactor (VT * concentration MLSS (X))	M	6531,20 KgMLSS	6531,20	13062,40	13062,40	6531,20	6531,20
Volatile Solids in bioreactor = Solids * (Mv / M)	Mv	3925,43 KgMLVSS	3955,29	7850,87	7910,59	3612,76	3663,27
Excess sludge production							
Produced biomass due to the development of heterotrophic bacteria $Y * Sr /(1 + kd * \theta c)$	X_B	127,89 Kg/d	136,05	255,79	272,10	58,76	65,01
Organic solids residual endogenous metabolism (cell debris) $Y * Sr * \beta * kd * \theta c / (1 + kd * \theta c)$	X_K	25,79 Kg/d	20,86	51,58	41,72	20,42	17,07
Produced biomass due to the development of autotrophic bacteria $[f / (1-f)] * Y * Sr /(1+kd*\Theta c)$	X_N	6,73 Kg/d	7,16	13,46	14,32	3,09	3,42
Inlet inorganic solids (1-fo) * Xo	Xoa	126,00 Kg/d	126,00	252,00	252,00	81,90	81,90
Non-biodegradable inlet organic solids $\alpha * fo * Xo$	X_A	29,40 Kg/d	29,40	58,80	58,80	19,11	19,11
Total biomass quantity in bioreactor	ΔX	315,81 Kg/d	319,47	631,62	638,95	183,28	186,51
Quantity of volatiles solids in bioreactor	ΔXv	189,81 Kg/d	193,47	379,62	386,95	101,38	104,61
Mv / M		0,6	0,6	0,6	0,6	0,6	0,6
	Xv	2404 mg/l	2422	2404	2422	2213	2244
olids quantity in outlet (Qmax * SSe)		56,76 Kg/d	56,76	113,52	113,52	56,76	56,76
Sludge quantity for removal, (ΔX - Qmax * SSe)	Pw	259,05 Kg/d	262,71	518,10	525,43	126,52	129,75
Biological excess sludge quantity	Mbs	259,05 Kg/d	262,71	518,10	525,43	126,52	129,75
Chemical sludge quantity	Mchs	53,16 Kg/d	53,16	106,31	106,31	34,55	34,55
Total sludge quantity for removal, (Mbs+Mchs)	Pw'	312,21 Kg/d	315,87	624,42	631,74	161,08	164,30
Removed sludge from excess PS, (Pw' / X_R)	Qw'	39,03 m^3/d	39,48	78,05	78,97	20,13	20,54
Slugde return							
Sludge return concentration from FST	X_R	8000 mg/l	8000	8000	8000	8000	8000
Sludge return volatiles concentration	X_{RV}	4808 mg/l	4845	4808	4845	4425	4487
Return sludge flow (Qmax*X/(X_R-X))	Q_R	94,60 m3/hr	94,60	189,20	189,20	94,60	94,60
Return percentage	R	100%	100%	100%	100%	100%	100%
Return pumps flow	Qpump	94,60 m3/hr	94,60	189,20	189,20	94,60	94,60
Number of return sludge pumps		1	1	2	2	1	1
Return pump flow	Qpump_R	94,6 m3/hr	94,6	94,6	94,6	94,6	94,6
Oxygen demand							
a. Oxidation of organic compound:							
Oxygen demand coefficient	F_{BOD5}	0,60 kgO_2/kgBOD5	0,60	0,60	0,60	0,60	0,60
OD1 = F_{BOD5} * Sr	OD1	211,63 kgO_2/d	211,63	423,26	423,26	137,56	137,56
b. Oxidation of N_NH4 (nitrification)							
Nitrification coefficient	F_N	4,60 kgO_2/$kgNH_4$	4,60	4,60	4,60	4,60	4,60
OD2 = F_N*Nr	OD2	241,53 kgO_2/d	241,53	483,05	483,05	156,99	156,99

ΓΕΩΡΓΙΟΣ ΚΑΡΚΑΝΙΑΣ
ΠΡΕΣΙΔΕΝΤ

GEORGIOS KARKANIAS
PRES.

3/12/18

c. Endogenous decay

$OD3 = 0{,}072 * Ma * 1{,}07^{(T-20)}$

$Ma = X*VT$	OD3	538,39 kgO2/d	208,80	1076,77	417,59	538,39	208,80
d. Denitrification							
Denitrification coefficient	F_D	2,90 $kgO_2/kgNO_3^-$	2,90	2,90	2,90	2,90	2,90
$OD4 = F_D*Nar$	OD4	123,60 kgO2/d	123,60	247,20	247,20	80,34	80,34
Total oxygen demand under field conditions							
$No = OD1+ OD2 + OD3 - OD4$	No	867,94 kgO2/d	538,35	1735,88	1076,70	752,60	423,01
		36,16 KgO2/hr	22,43	72,33	44,86	31,36	17,63
Demanded oxygen under field conditions (No / Sr)		**2,46 KgO2/KgBODαπορ**	**1,53**	**2,46**	**1,53**	**3,28**	**1,85**

SOR calculation

(tap water, 20°C, zero dissolved oxygen)

$$\frac{No}{N} = \alpha \frac{\beta*E*Cw - CL}{Cw,20} * 1.024^{(T-20)}$$

Actual oxygen rate under field conditions (AOR)	No	867,94 kgO2/d	538,35	1735,88	1076,70	752,60	423,01
Oxygen transfer correction factor for waste, typically 0.4-0.8, $\alpha = e^{-0.084*MLSS}$	α	0,71	0,71	0,71	0,71	0,71	0,71
Salinity-surface tension correction factor, typically 0.95 - 0.98	β	0,95	0,95	0,95	0,95	0,95	0,95
Operating oxygen concentration	CL	2 mg/l	2	2	2	2	2
Oxygen saturation concentration in tap water and design temperature	Cw	8,73 mg/l	11,83	8,73	11,83	8,73	11,83
Dissolved oxygen saturation concentration under standard conditions	Cw,20	9,07 mg/l (στους 20 oC)	9,07	9,07	9,07	9,07	9,07
Design temperature	T	22,00 °C	8,00	22,00	8,00	22,00	8,00
Standard oxygen rate (SOR)	N	1669,3 kgO2/d	983,1	3338,6	1966,2	1447,4	772,5
		69,6 kgO2/hr	41,0	139,1	81,9	60,3	32,2
Safety factor		1,03	1,03	1,03	1,03	1,03	1,03
Max oxygen demand under standard conditions	N'	1719,4 kgO2/d	1012,6	3438,7	2025,2	1490,9	795,6
		71,6 kgO2/hr	42,2	143,3	84,4	62,1	33,2
Diffusers selection							
Diffusers submergence		4,77 m	4,77	4,77	4,77	4,77	4,77
Diffusers efficiency, SOTE	n	31,01%	31,01%	31,01%	31,01%	31,01%	31,01%
Air flow per diffuser		4,034 Nm3/hr_διαχυτή	4,034	4,034	4,034	4,034	4,034
Oxygen concentration in air		0,30 kgO2/Nm3αέρα	0,30	0,30	0,30	0,30	0,30
Diffusers number per oxidation ditch		**192 διαχυτές**	**192**	**192**	**192**	**192**	**192**
Total Diffusers number		**192 διαχυτές**	**192**	**384**	**384**	**192**	**192**
Standard Oxygen Rate, SOR		**72,0 KgO2/h**	**72,0**	**144,0**	**144,0**	**72,0**	**72,0**
		4,90 KgO2/KgBOD5rev	**4,90**	**4,90**	**4,90**	**7,54**	**7,54**
Blowers selection							
Demanded air flow		774,5 Nm3 αέρα / hr	774,5	1549,0	1549,0	774,5	774,5
Blowers number (in operation)		1 φυσητήρες	1	2	2	1	1
Demanded blower air flow		774,5 Nm3 αέρα / hr	774,5	774,5	774,5	774,5	774,5
Blower air flow		776 Nm3 αέρα / hr	776	776	776	776	776

GEORGIOS KARKANIAS
PRESIDENT

3/12/18

Chemical precipitation of phosphorus

		1st STAGE 6000 PE Summer	1st STAGE 6000 Winter	2nd STAGE 12000 Summer	2nd STAGE 12000 Winter	Start up 3900 Summer	Start up 3900 Winter
Average Dry Weather Daily Flow	Q_{ADF}	898,60 m3/d	898,60	1797,20	1797,20	584,10	584,10
		37,4 m3/h	37,4	74,9	74,9	24,3	24,3
Maximum Wet Weather Daily Flow	Qmax	2270,40 m3/d	2270,40	4540,80	4540,80	2270,40	2270,40
		94,60 m3/h	94,60	189,20	189,20	94,60	94,60
Sludge Recirculation Flow (100%Qmax)	Qr	94,60 m3/h	94,60	189,20	189,20	94,60	94,60
Wet Weather Flow	Q_{WWF}	94,6 m3/h	94,6	189,2	189,2	94,6	94,6
Maximum Wet Weather Daily Flow	Qmax	2270,40 m3/d	2270,40	4540,80	4540,80	2270,40	2270,40
Total phosphorus in inlet	Pimax	10,80 Kg/d	10,80	21,60	21,60	7,02	7,02
		4,76 mg/l	4,76	4,76	4,76	3,09	3,09
Phosphorus for biomass synthesis (15%*Pimax)	Psyn	1,62 Kg/d	1,62	3,24	3,24	1,05	1,05
Total phosphorus outlet	Pe	2,00 mg/l	2,00	2,00	2,00	2,00	2,(
		4,54 Kg/d	4,54	9,08	9,08	4,54	4,54
Quantity of P for chemical precipitation, Pch = Pimax - Psyn - Pe	**Pch**	**2,04 mg/l**	**2,04**	**2,04**	**2,04**	**0,63**	**0,63**
		4,64 Kg/d	**4,64**	**9,28**	**9,28**	**1,43**	**1,43**
Daily demanded quantity of Fe (Fe = 2.88 * Pch)	Fe	13,36 Kg/d	13,36	26,72	26,72	4,11	4,11
Solution composition ($FeClSO_4$) in Fe^{+3}		12,30%	12,30%	12,30%	12,30%	12,30%	12,30%
Solution density ($FeClSO_4$)	C	1,45 Kg/l	1,45	1,45	1,45	1,45	1,45
Demanded dialy flow solution $FeClSO_4$		**74,91 l/d**	**74,91**	**149,83**	**149,83**	**23,03**	**23,03**
Demanded stogare time		30,00 d	30,00	30,00	30,00	30,00	30,00
Demanded stogare volume		2247 l	2247	4495	4495	691	691
Dosing pump dimensioning $FeClSO_4$							
Wet Weather Flow	Q_{WWF}	94,6 m3/hr	94,6	189,2	189,2	94,6	94,6
Quantity of P for chemical precipitation	Pch	2,04 mg/l	2,04	2,04	2,04	0,63	0,63
		0,19 Kg/h	0,19	0,39	0,39	0,06	0,06
Hourly demanded quantity of Fe, Fe = 2.88 * Pch	Fe	0,56 Kg/h	0,56	1,11	1,11	0,17	0,17
emanded solution flow FeClSO4 for Q_{WWF}		**3,12 l/hr**	**3,12**	**6,24**	**6,24**	**0,96**	**0,(**
Safety factor		1,50	1,50	1,50	1,50	1,50	1,50
Pumps number in operation		1	1	2	2	1	1
Demanded pump flow FeClSO4		**4,68 l/hr**	**4,68**	**4,68**	**4,68**	**1,44**	**1,44**
Chemical sludge quantity							
Demanded daily quantity of Fe	Fe	13,36 Kg/d	13,36	26,72	26,72	4,11	4,11
Produced chemical sludge, Mch.sl = 2,5 * Fe	**Mch.sl**	**33,40 Kg/d**	**33,40**	**66,80**	**66,80**	**10,27**	**10,27**

GEORGIOS KARKANIAS
PRESIDENT
3/2/18

Average Dry Weather Daily Flow	Q_{ADF}	898,60 m3/d	898,60	1797,20	1797,20	584,10	584,10
Total phosphorus in inlet	Pimax	10,80 Kg/d	10,80	21,60	21,60	7,02	7,02
		12,0 mg/l	12,0	12,0	12,0	12,0	12,0
Phosphorus for biomass synthesis (15%*Pimax)	Psyn	1,62 Kg/d	1,62	3,24	3,24	1,05	1,05
Total phosphorus outlet	Pe	2,00 mg/l	2,00	2,00	2,00	2,00	2,00
		1,80 Kg/d	1,80	3,59	3,59	1,17	1,17
Quantity of P for chemical precipitation, Pch = Pimax - Psyn - Pe	**Pch**	**8,22 mg/l**	**8,22**	**8,22**	**8,22**	**8,22**	**8,22**
		7,38 Kg/d	**7,38**	**14,77**	**14,77**	**4,80**	**4,80**
Daily demanded quantity of Fe (Fe = 2.88 * Pch)	Fe	21,26 Kg/d	21,26	42,52	42,52	13,82	13,82
Solution composition ($FeClSO_4$) in Fe^{+3}		12,30%	12,30%	12,30%	12,30%	12,30%	12,30%
Solution density ($FeClSO_4$)	C	1,45 Kg/l	1,45	1,45	1,45	1,45	1,45
Demanded dialy flow solution $FeClSO_4$		**119,22 l/d**	**119,22**	**238,44**	**238,44**	**77,49**	**77,49**
Demanded stogare time		30,00 d	30,00	30,00	30,00	30,00	30,00
Demanded stogare volume		3577 l	3577	7153	7153	2325	2325
Dosing pump dimensioning $FeClSO_4$							
Wet Weather Flow	Q_{WWF}	94,6 m3/hr	94,6	189,2	189,2	94,6	94,6
Quantity of P for chemical precipitation	Pch	8,22 mg/l	8,22	8,22	8,22	8,22	8,22
		0,78 Kg/h	0,78	1,55	1,55	0,78	0,78
Hourly demanded quantity of Fe, Fe = 2.88 * Pch	Fe	2,24 Kg/h	2,24	4,48	4,48	2,24	2,24
Demanded solution flow FeClSO4 for Q_{WWF}		**12,55 l/hr**	**12,55**	**25,10**	**25,10**	**12,55**	**12,55**
Safety factor		1,50	1,50	1,50	1,50	1,50	1,50
Pumps number in operation		1	1	2	2	1	1
Demanded pump flow FeClSO4		**18,83 l/hr**	**18,83**	**18,83**	**18,83**	**18,83**	**18,83**
Chemical sludge quantity							
Demanded daily quantity of Fe	Fe	21,26 Kg/d	21,26	42,52	42,52	13,82	13,82
Produced chemical sludge, Mch.sl = 2,5 * Fe	**Mch.sl**	**53,16 Kg/d**	**53,16**	**106,31**	**106,31**	**34,55**	**34,55**

GEORGIOS KARKANIAS
PRESIDENT
3/12/18

Final Settling Tanks

		1st STAGE 6000 PE Summer	1st STAGE 6000 Winter	2nd STAGE 12000 Summer	2nd STAGE 12000 Winter	Start up 3900 Summer	Start up 3900 Winter
Average Dry Weather Daily Flow	Q_{ADF}	898,60 m3/d	898,60	1797,20	1797,20	584,10	584,10
		37,44 m3/hr	37,44	74,88	74,88	24,34	24,34
Maximum Dry Weather Hourly Flow	Q_{MHF}	78,80 m3/hr	78,80	157,60	157,60	51,20	51,20
Maximum Wet Weather Daily Flow	Qmax	2270,40 m3/d	2270,40	4540,80	4540,80	2270,40	2270,40
		94,60 m3/hr	94,60	189,20	189,20	94,60	94,60
Wet Weather Flow	Q_{WWF}	94,6 m3/hr	94,6	189,2	189,2	94,6	94,6
Sludge return flow (100%Qmax)	Qr	94,60 m3/hr	94,60	189,20	189,20	94,60	94,60
Max Surface loading for Qmax	Cs	0,65 m3/m²_h	0,65	0,65	0,65	0,65	0,65
Solids loading for Qmax +Qr	C	6,00 Kg/m²_h	6,00	6,00	6,00	6,00	6,00
		144,00 Kg/m²_d	144,00	144,00	144,00	144,00	144,00
Mixed liquor concentration (MLSS)	X	4000,00 mg/l	4000,00	4000,00	4000,00	4000,00	4000,00
Number of tanks	v1	1	1	2	2	1	1
Number of tanks in operation	v2	1	1	2	2	1	1
Demanded tank diameter (for Surface loading)	Do	13,6 m	13,6	13,6	13,6	13,6	13,6
Demanded tank diameter (for Solids loading)	Do'	12,7 m	12,7	12,7	12,7	12,7	12,7
Tank diameter	D	14,0 m	14,0	14,0	14,0	14,0	14,0
Tank surface	S	153,86 m²	153,86	153,86	153,86	153,86	153,86
·tal tanks surface	St	153,86 m²	153,86	307,72	307,72	153,86	153,86
Tank overflow weir length	NL	39,9 m	39,9	39,9	39,9	39,9	39,9
Overflow length per weir meter	L'	0,67	0,67	0,67	0,67	0,67	0,67
Overflow length of tank	L	26,72 m	26,72	26,72	26,72	26,72	26,72
Total overflow length of tanks	Lt	26,72 m	26,72	53,44	53,44	26,72	26,72
Lateral liquid height into the tank	H1	4,0 m	4,0	4,0	4,0	4,0	4,0
Average lateral liquid height into the tank	H2	4,15 m	4,15	4,15	4,15	4,15	4,15
Tank volume	V	638,52 m3	638,52	638,52	638,52	638,52	638,52
Total tanks volume	Vt	638,52 m3	638,52	1277,04	1277,04	638,52	638,52
Retention time in Q_{WWF} **(Vt/Q_{WWF})**	t1	6,7 hr	6,7	6,7	6,7	6,7	6,7
Retention time in Qmax+Qr **[Vt/(Qmax+Qr)]**	t2	3,37 hr	3,37	3,37	3,37	3,37	3,37
Retention time in Q_{ADF}+Qr **[Vt/(Q_{ADF}+Qr)]**	t3	4,84 hr	4,84	4,84	4,84	5,37	5,37
Surface loading for Q_{ADF} **(Q_{ADF}/St)**	Cs1	0,24 m³/m²_h	0,24	0,24	0,24	0,16	0,16
Surface loading for Q_{MHF} **(Q_{MHF}/St)**	Cs2	0,51 m³/m²_h	0,51	0,51	0,51	0,33	0,33
Surface loading for Qmax **(Qmax/St)**	Cs3	0,61 m³/m²_h	0,61	0,61	0,61	0,61	0,61
Surface loading for Q_{WWF} **(Q_{WWF}/St)**	Cs4	0,61 m³/m²_h	0,61	0,61	0,61	0,61	0,61
·lids loading for Q_{ADF} + Qr **[X *(Q_{ADF}+Qr)/St]**	C1	3,43 Kg/m²_h	3,43	3,43	3,43	3,09	3,09
Solids loading for Q_{MHF} + Qr **[X *(Q_{MHF}+Qr)/St]**	C2	4,51 Kg/m²_h	4,51	4,51	4,51	3,79	3,79
Solids loading for Qmax + Qr **[X *(Qmax+Qr)/St]**	C3	4,92 Kg/m²_h	4,92	4,92	4,92	4,92	4,92
Flow rate in overflow for Q_{ADF} **(Q_{ADF}/Lt)**	u1	33,63 m3/m_d	33,63	33,63	33,63	21,86	21,86
Flow rate in overflow for Qmax **(Qmax/Lt)**	u2	84,98 m3/m_d	84,98	84,98	84,98	84,98	84,98
Flow rate in overflow for Q_{WWF} **(Q_{WWF} /Lt)**	u3	84,98 m3/m_d	84,98	84,98	84,98	84,98	84,98
		3,54 m3/m_h	3,54	3,54	3,54	3,54	3,54

GEORGIOS KARKANIAS
PRESIDENT
3/12/18

FILTRATION UNIT

		1st STAGE 6000 PE Summer	1st STAGE 6000 Winter	2nd STAGE 12000 Summer	2nd STAGE 12000 Winter	Start up 3900 Summer	Start up 3900 Winter
Average Dry Weather Daily Flow	Q_{ADF}	898,60 m3/d	898,60	1797,20	1797,20	584,10	584,10
		37,44 m3/hr	37,44	74,88	74,88	24,34	24,34
Maximum Wet Weather Daily Flow	Qmax	2270,40 m3/d	2270,40	4540,80	4540,80	2270,40	2270,40
		94,60 m3/hr	94,60	189,20	189,20	94,60	94,60
Wet Weather Flow	Q_{WWF}	94,60 m3/hr	94,60	189,20	189,20	94,60	94,60
Surface loading for Q_{WWF}	Cs	40 m^3/m^2_h	40	40	40	40	40
Demanded active filter surface (~65% of total)	So	2,37 m^2	2,37	4,73	4,73	2,37	2,37
Demanded total filter surface	So'	3,64 m^2	3,64	7,28	7,28	3,64	3,64
Number of filters	v	1	1	2	2	1	1
drum diameter	d	0,93 m	0,93	0,93	0,93	0,93	0,93
drum length	l	1,5 m	1,5	1,5	1,5	1,5	1,5
filter surface	S	3,75 m^2	3,75	3,75	3,75	3,75	3,75
al filters surface	Sdoλ	3,75 m^2	3,75	7,50	7,50	3,75	3,75
total active filters surface (~65% of total)	Soλ	2,39 m^2	2,39	4,78	4,78	2,39	2,39
Surface loading for Q_{ADF}	Cs1	15,67 $m3/m^2\_h$	15,67	15,67	15,67	10,18	10,18
Surface loading for Qmax	Cs2	39,58 $m3/m^2\_h$	39,58	39,58	39,58	39,58	39,58
Surface loading for Q_{WWF}	Cs3	39,6 $m3/m^2\_h$	39,6	39,6	39,6	39,6	39,6
Number of tanks	n	1	1	1	1	1	1
Tank dimensions							
width	W	1,15 m	1,15	1,15	1,15	1,15	1,15
length	L	2,80 m	2,80	2,80	2,80	2,80	2,80
height	H	1,25 m	1,25	1,25	1,25	1,25	1,25

GEORGIOS KARKANIAS
PRESIDENT
3/12/18

UV DISINFECTION UNIT

		1st STAGE 6000 PE Summer	1st STAGE 6000 Winter	2nd STAGE 12000 Summer	2nd STAGE 12000 Winter	Start up 3900 Summer	Start up 3900 Winter
Average Dry Weather Daily Flow	Q_{ADF}	898,60 m3/d	898,60	1797,20	1797,20	584,10	584,10
		37,44 m3/hr	37,44	74,88	74,88	24,34	24,34
Maximum Dry Weather Hourly Flow	Q_{MHF}	78,80 m3/hr	78,80	157,60	157,60	51,20	51,20
Design flow	Qmax	2270,40 m3/d	2270,40	4540,80	4540,80	2270,40	2270,40
		94,60 m3/hr	94,60	189,20	189,20	94,60	94,60
Wet Weather Flow	Q_{WWF}	94,6 m3/hr	94,6	189,2	189,2	94,6	94,6
Number of tanks	N	1	1	2	2	1	1
Total height	B1	1,60 m	1,600	1,600	1,600	1,600	1,600
Liquid height (min)	B2	1,200 m	1,200	1,200	1,200	1,200	1,200
Width	Π	0,612 m	0,612	0,305	0,305	0,305	0,305
length	M	3,00 m	3,00	3,00	3,00	3,00	3,00
Effective tank volume	V	2,203 m3	2,203	2,203	2,203	2,203	2,203
Total effective tanks volume	Vt	2,203 m3	2,203	2,203	2,203	2,203	2,20
Retention time for Q_{WWF} (V/ Q_{WWF})	t1	84 sec	84	42	42	84	
Retention time for Q_{ADF}	t2	212 sec	212	106	106	326	326
Retention time for Qmax	t3	84 sec	84	42	42	84	84

GEORGIOS KARKANIAS
PRESIDENT
3/12/18

Sludge aerobic stabilization & thickening tank

		1st STAGE 6000 PE Summer	1st STAGE 6000 Winter	2nd STAGE 12000 Summer	2nd STAGE 12000 Winter	Start up 3900 Summer	Start up 3900 Winter
Max solids loading	Cs	25,0 kg/m2/d	25,0	25,0	25,0	25,0	25,0
Loss of mass by sludge stabilization	α	90,00%	90,00%	90,00%	90,00%	90,00%	90,00%
Excess sludge concetration	Xil	0,80%	0,80%	0,80%	0,80%	0,80%	0,80%
Sludge quantity for stabilization/thickening	ΔPx1	312,21 Kg/d	315,87	624,42	631,74	161,08	164,30
Sludge flow for stabilization/thickening	ΔPq1	39,03 m3/d	39,48	78,05	78,97	20,13	20,54
Stabilized / thickened sludge concetration	Xo1	2,5%	2,5%	2,5%	2,5%	2,5%	2,5%
Stabilized / thickened sludge quantity		280,99 Kg/d	284,28	561,97	568,56	144,97	147,87
Stabilized / thickened sludge flow		11,24 m3/d	11,37	22,48	22,74	5,80	5,91
Drainage flow		27,79 m3/d	28,11	55,57	56,22	14,34	14,62
Average solids concentration into the tank	Xu1	1,50%	1,50%	1,50%	1,50%	1,50%	1,50%
Sludge daily flow for thickening desigr	ΔPr'1	20,8 m3/d	21,1	41,6	42,1	10,7	11,0
Demanded surface **(ΔPx / Cs)**	So	12,5 m²	12,6	25,0	25,3	6,4	6,6
Number of tanks	v	1	1	1	1	1	1
Demanded tank diameter	Do	3,99 m	4,01	5,64	5,67	2,86	2,89
Tank diameter	D	10 m	10	10	10	10	10
Tank surface	S	78,5 m²	78,5	78,5	78,5	78,5	78,5
Total tanks surface	St	78,5 m²	78,5	78,5	78,5	78,5	78,5
Lateral slugde height into the tank	H1	4,5 m	4,5	4,5	4,5	4,5	4,5
Average lateral sludge height into the tank	H2	4,5 m	4,5	4,5	4,5	4,5	4,5
Tank volume	V	353,25 m3	353,25	353,25	353,25	353,25	353,25
Total tanks volume	Vt	353,25 m3	353,25	353,25	353,25	353,25	353,25
Solids loading		3,98 Kg/m²_d	4,02	7,95	8,05	2,05	2,09
Sludge retention time		407,32 hr	402,60	203,66	201,30	789,50	773,99
		16,97 d	16,78	8,49	8,39	32,90	32,25
Air demand							
Air flow	Qair =	1,50 m3/hr/m3	1,50	1,50	1,50	1,50	1,50
Total air flow	Qtot =	529,9 m3/hr	529,9	529,9	529,9	529,9	529,9

GEORGIOS KARKANIAS
PRESIDENT
3/12/18

Sludge holding tank

		1st STAGE 6000 PE Summer		1st STAGE 6000 Winter	2nd STAGE 12000 Summer	2nd STAGE 12000 Winter	Start up 3900 Summer	Start up 3900 Winter
Stabilized / thickened sludge quantity	ΔPy	280,99	Kg/d	284,28	561,97	568,56	144,97	147,87
Stabilized / thickened sludge concetration	Xi	2,50%		2,50%	2,50%	2,50%	2,50%	2,50%
Stabilized / thickened sludge flow	ΔPr	11,24	m3/d	11,37	22,48	22,74	5,80	5,91
Dimensions :								
Number of tanks	N	1		1	1	1	1	1
Diameter	D	5,0	m	5,0	5,0	5,0	5,0	5,0
Sludge height	Hs	3,1	m	3,1	3,1	3,1	3,1	3,1
Tank surface	S	19,63	m2	19,63	19,63	19,63	19,63	19,63
Effective tank volume	Vef	60,84	m3	60,84	60,84	60,84	60,84	60,84
Retention time	t	5,4	d	5,4	2,7	2,7	10,5	10,3

GEORGIOS KARKANIAS
PRESIDENT
3/12/18

Sludge mechanical dewatering unit

		1st STAGE 6000 PE Summer		1st STAGE 6000 Winter	2nd STAGE 12000 Summer	2nd STAGE 12000 Winter	Start up 3900 Summer	Start up 3900 Winter
Stabilized / thickened sludge quantity	ΔPy	280,99	Kg/d	284,28	561,97	568,56	144,97	147,87
Stabilized / thickened sludge concetration	Xi	2,5%		2,5%	2,5%	2,5%	2,5%	2,5%
Stabilized / thickened sludge flow	ΔPr	11,24	m3/d	11,37	22,48	22,74	5,80	5,91
Minimum final dry matter content	Xo	23,0%		23,0%	23,0%	23,0%	23,0%	23,0%
Recovery	α	95,00%		95,00%	95,00%	95,00%	95,00%	95,00%
Sludge quantity for dewatering	ΔPy	280,99	Kg/d	284,28	561,97	568,56	144,97	147,87
Dewatered sludge quantity	ΔPz	266,94	Kg/d	270,07	533,88	540,14	137,72	140,48
Dewatered sludge flow		1,16	m3/d	1,17	2,32	2,35	0,60	0,61
Drainage flow		10,08	m3/d	10,20	20,16	20,39	5,20	5,30
Daily operation time		5	hr	5	5	5	5	5
Weekly operation time		5	d	5	10	10	5	5
Sludge production (operation time 25h per week)		78,68	Kg/hr	79,60	78,68	79,60	40,59	41,40
Sludge production (operation time 25h per week)		3,15	m3/hr	3,18	3,15	3,18	1,62	1,66
Number of decanters	n	1		1	1	1	1	1
Demanded decanter capacity		3,15	m3/hr	3,18	3,15	3,18	1,62	1,66
Polyelectrolyte dosage		10,00	gr/Kg SS	10,00	10,00	10,00	10,00	10,00
Total polyelectrolyte quantity		786,76	gr/hr	795,99	786,76	795,99	405,91	414,05
Μέγιστη ημερήσια ποσότητα πολυηλεκτρολύτη		3,93	Kg/d	3,98	3,93	3,98	2,03	2,07
Polyelectrolyte solution concentration		2,00	gr/l	2,00	2,00	2,00	2,00	2,00
Total polyelectrolyte flow		393,38	l/hr	397,99	393,38	397,99	202,96	207,02
Pumps number (in operation)		1		1	1	1	1	1
Demanded pump flow		393,38	l/hr	397,99	393,38	397,99	202,96	207,02
Demanded daily polyelectrolyte quantity		1966,91	lt/d	1989,97	1966,91	1989,97	1014,78	1035,11

KARKANIAS ENVIRONMENTAL TECHNOLOGY S.A.
INDUSTRIAL AREA OF LARISA - GREECE
POSTAL CODE 41004, BOX 3053
TEL.: +30 2410 541366 - FAX: +30 2410 541354
Email: info@karkanias.gr
TAX NUMBER: 095244711
REGISTRATION NUMBER: 48779/31/B/01/12

GEORGIOS KARKANIAS
PRESIDENT

3/12/18

3/12/18

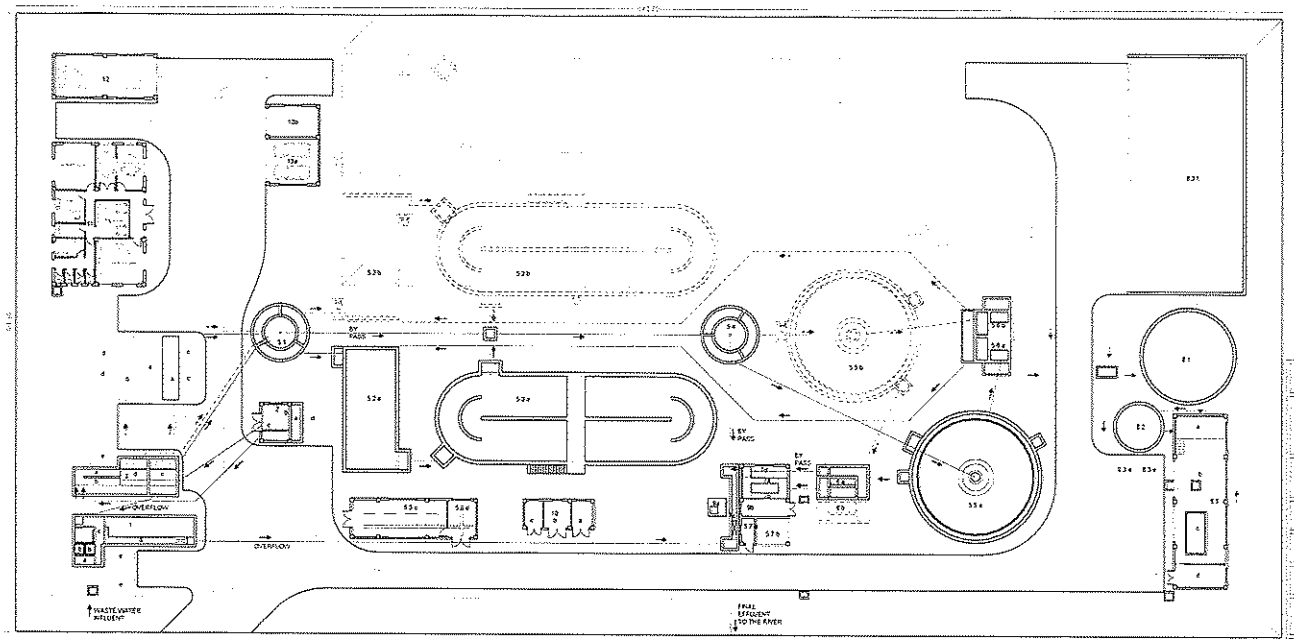

WWTP STAGE 1
WWTP STAGE 2
WWTP FUTEURE EXTENSION (STAGE 3)

WASTE WATER LINE STAGE 1
WASTE WATER LINE STAGE 2
RETURN SLUDGE LINE STAGE 1
RETURN SLUDGE LINE STAGE 2
EXCESS SLUDGE LINE STAGE 1
EXCESS SLUDGE LINE STAGE 2

FINAL AVERAGE SURFACE LEVEL +46.40

LEGEND

1. INLET AND OVERFLOW MANHOLE
   a. inlet chamber
   b. grit traps
   c. overflow chamber
   d. parshall channel
   e. grit containers
2. SEPTAGE UNIT
   a. fine screening
   b. septage tank
   c. septage building
   d. container for screenings and grates
3. PUMPING STATION
   a. automatic coarse screen
   b. manual cleaned coarse screen
   c. pumping station tank stage 1
   d. pumping station tank stage 2
   e. container for screenings
4. MECHANICAL WASTEWATER PRETREATMENT UNIT
   a. compact mechanical pretreatment unit stage 1
   b. compact mechanical pretreatment unit stage 2
   c. containers for screenings and sand stage 1
   d. containers for screenings and sand stage 2
5.1 FLOW DISTRIBUTION CHAMBER I
5.2 PREDENITRIFICATION TANK
   a. tank stage 1
   b. tank stage 2
5.3 CIRCULATED ACTIVATED SLUDGE TANK
   a. tank stage 1
   b. tank stage 2
   c. blower house
   d. switch room
5.4 FLOW DISTRIBUTION CHAMBER II
5.5 FINAL SETTLING TANK
   a. tank stage 1
   b. tank stage 2
5.6 RETURN ACTIVATED SLUDGE AND EXCESS SLUDGE PUMPING STATION
   a. pumping station stage 1
   b. pumping station stage 2
5.7 CHEMICAL PHOSPHORUS PRECIPITATION
   a. equipment room
   b. retention piece (basin)
6. FILTRATION UNIT
   a. stage 1
   b. stage 2
7. UV DISINFECTION UNIT-EFFLUENT
   a. channel UV stage 1
   b. channel UV stage 2
   c. parshall channel
   d. space for automatic cumming station
8.1 SLUDGE AEROBIC STABILISATION AND THICKENING TANK
8.2 SLUDGE HOLDING TANK
8.3 SLUDGE MECHANICAL DEWATERING BUILDING
   a. space for sotor sludge pumps
   b. space for dewatering sludge equipment stage 1
   c. space for the equipment (based within stage 2)
   d. switch room
   e. containers for dewatered sludge
   f. dewatered sludge storage site
9. SERVICE WATER UNIT
   a. service water tank
   b. room for automatic pressure station
10 TRANSFORMER STATION BUILDING
   a. medium Voltage switchboard room
   b. transformer room
   c. low voltage main distribution switchboard room
11 OPERATION BUILDING
12 GARAGE I for the trucks
13 GARAGE II
   a. parking room
   b. back power supply unit

EMPLOYER: D.O.O. "Vodovod i kanalizacija" Danilovgrad

TENDERER: KARKANIAS ENVIRONMENTAL TECHNOLOGY S.A.
Industrial Area of Larissa | Postal Code: 41004 |
Box: 3033 | Larissa, Greece
Phone: +30 2410561306
E-mail: technical@karkanias.gr
www.karkanias.gr

TENDER: Danilovgrad Municipal Infrastructure Project
Construction of Wastewater Plant

TENDER IDENTIFICATION: EBRD RFB DAN 9000

Subject: **Technical Proposal**

Date: 14th SEPTEMBER 2017 SCALE: 1:200

Drawing: **General Layout** NO: **A1**

3/12/18

3/12/18

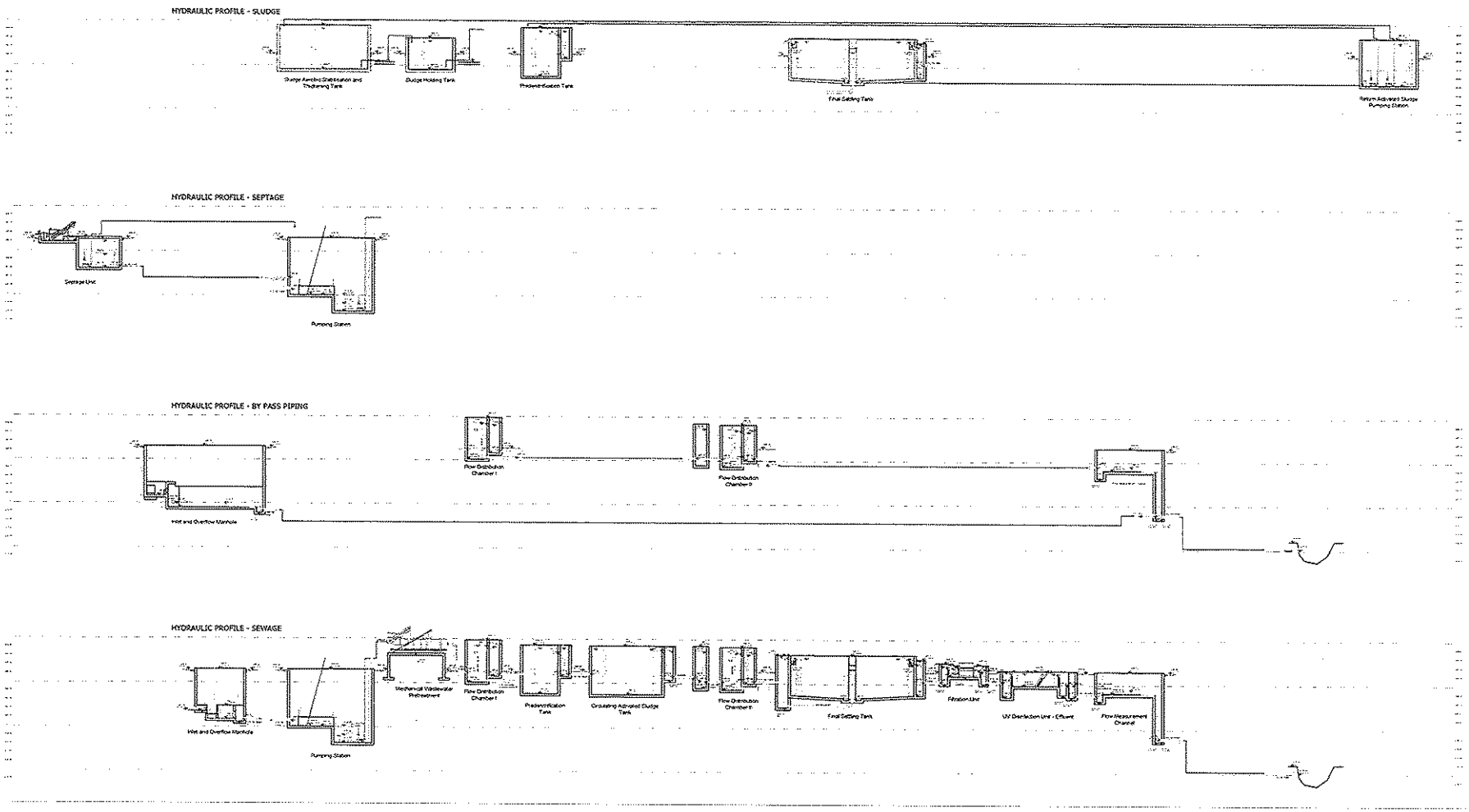

EMPLOYER :	D.O.O. "Vodovod i kanalizacija" Danilovgrad
TENDERER :	KARKANIAS ENVIRONMENTAL TECHNOLOGY S.A.
TENDER :	Danilovgrad Municipal Infrastructure Project Construction of Wastewater Plant
TENDER DENOMINATION	EBRD ME DAN 9000
Subject :	Technical Proposal
Date :	14th SEPTEMBER 2017 SCALE : 1:150
Drawing :	Hydraulic Profiles No : H1

3/12/18

3/12/18

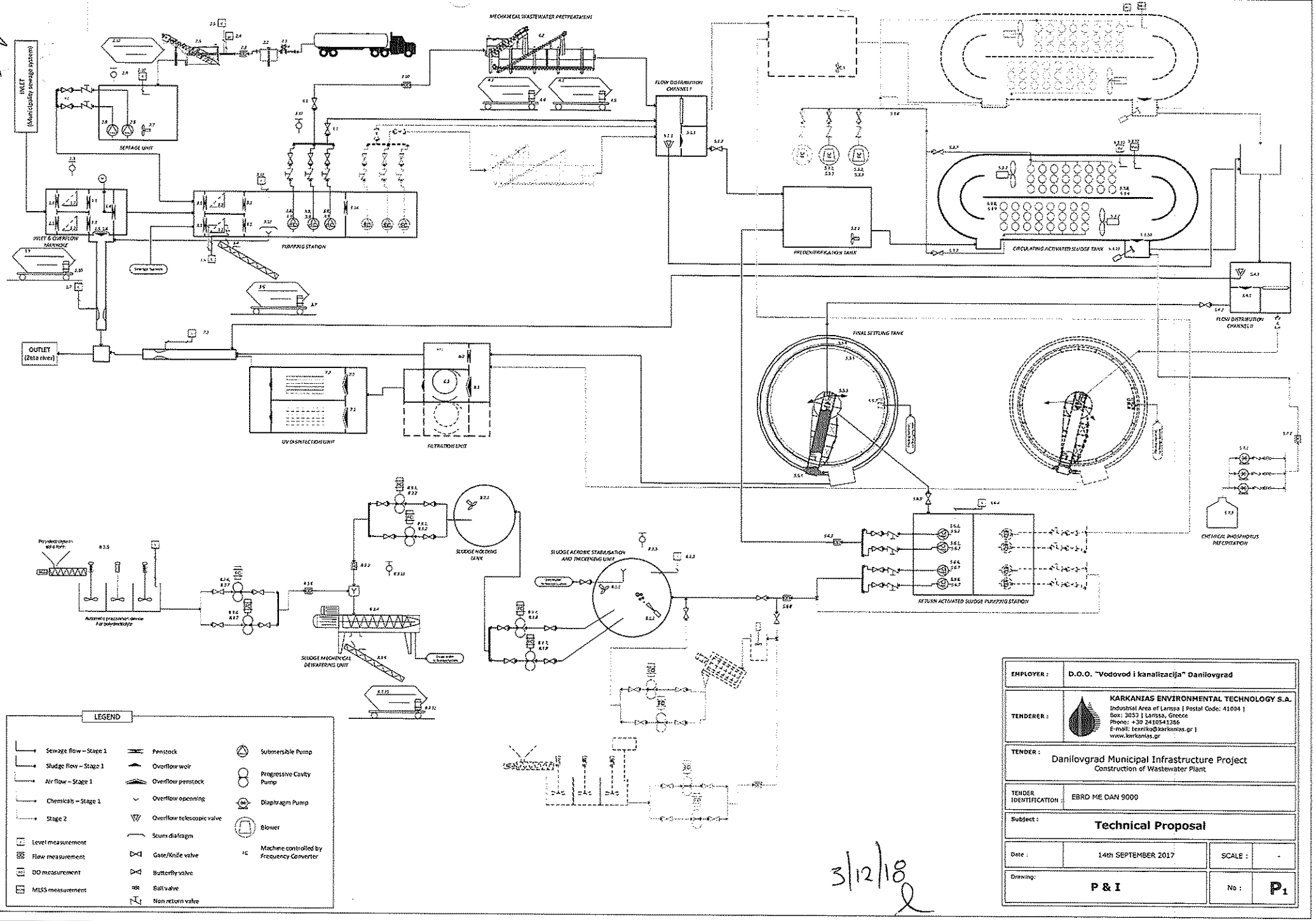

EMPLOYER :	D.O.O. "Vodovod i kanalizacija" Danilovgrad
TENDERER :	KARKANIAS ENVIRONMENTAL TECHNOLOGY S.A. Industrial Area of Larissa | Postal Code: 41004 | Box: 3053 | Larissa, Greece Phone: +30 2410541366 E-mail: texniko@karkanias.gr | www.karkanias.gr
TENDER :	Danilovgrad Municipal Infrastructure Project Construction of Wastewater Plant
TENDER IDENTIFICATION :	EBRD ME DAN 9000
Subject :	**Technical Proposal**
Date :	14th SEPTEMBER 2017
SCALE :	-
Drawing:	**P & I**
No :	**P_1**

3/12/18

3/12/18

1. INLET AND OVERFLOW MANHOLE

3/12/18

KARKANIAS
ENVIRONMENTAL TECHNOLOGY S.A.

CHANNEL PENSTOCKS

Manufacturer General Specifications

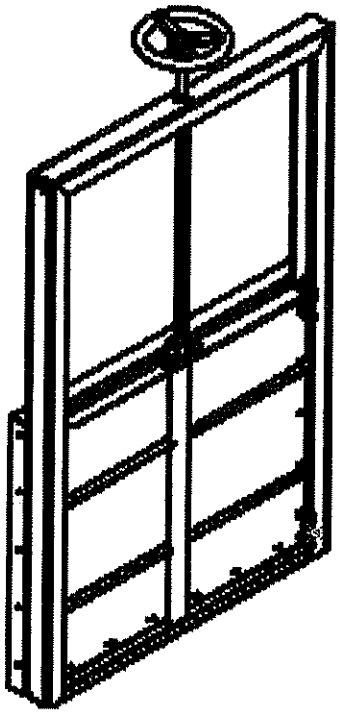

General description

Channel penstocks are 3-sided sealing gates manufactured in square and rectangular dimensions, together with a wide range of trim levels and designs to suit a variety of applications. Operation is achieved manually by means of a hand wheel, electrically or pneumatically by actuators. Mounting options can be mainly on face wall or alternatively embedded in concrete inside channels. The whole structure is made of stainless steel grade 304L for higher corrosion resistance.

HEADQUARTERS:
Industrial Area of Larisa
Postal Code 41004, BOX 3053 Greece
www.karkanias.gr

Phone: +30 2410 541386
Fax: +30 2410 541354
Email: info@karkanias.gr

3/12/18

KARKANIAS
ENVIRONMENTAL TECHNOLOGY S.A.

Construction

- **Frame**: welded stainless steel
- **Frame seals**: parallel resilient EPDM seals bonded to frame sides
- **Door**: stainless steel with reinforcement angles if required
- **Guide system**: stainless steel and PTFE
- **Spindle nut**: zinc-free bronze
- **Spindle drive unit**: stainless steel with trapezoidal thread
- **Operation**: manually or electric with actuator Explosion-Proof II 2 G EExe II T3
- **Dimensions**: upon request

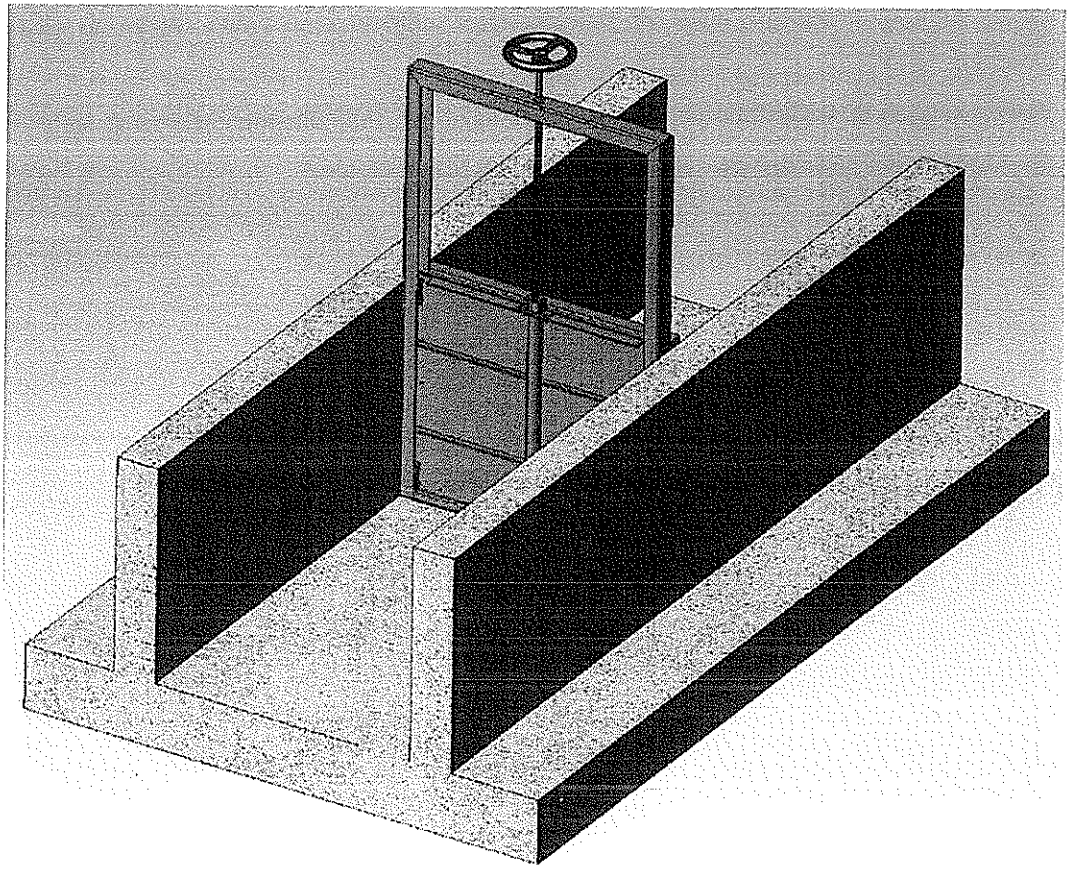

HEADQUARTERS:
Industrial Area of Larisa
Postal Code 41004, BOX 3053 Greece
www.karkanias.gr

Phone: +30 2410 541386
Fax: +30 2410 541354
Email: info@karkanias.gr

3/12/18

KARKANIAS
ENVIRONMENTAL TECHNOLOGY S.A.

Design

Channel penstocks frame is welded stainless steel shaped in U-profile and is suitable for mounting by grouting or by wall mounting at the end or into an open channel. Each penstock is provided with a suitable handwheel of adequate diameter for the duty required. Gearing is supplied where is necessary to ensure that the required operating force applied by hand to the rim of the wheel does not exceed 200 N. Instead of handwheel an electric actuator can be applied. The height of the handing is approximately 1.0 m above the operating level.

Penstocks are of non-rising stem and operation is achieved by a spindle. Spindle's thread form is trapezoidal and direction of closing is clockwise. On the door is fixed the spindle nut which is made of zinc-free bronze. The door is equipped with reinforced ribs in order to withstand the applied pressure load.

Fixing nuts and bolts are made of stainless steel material with grade similar to whole structure.

Penstocks shall be water-tight under the conditions of head and direction of flow as stated in the appropriate Clause or Schedule of the Particular Specification.

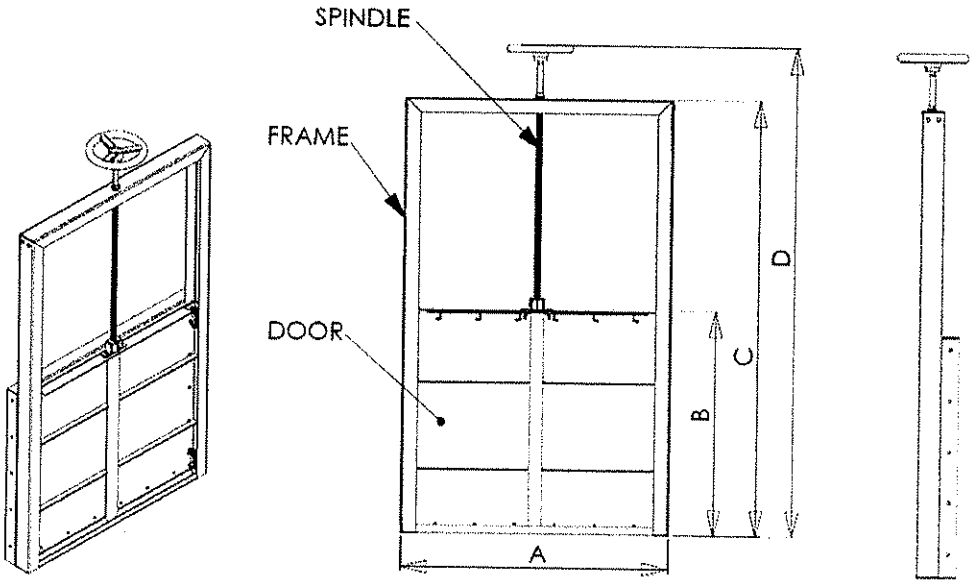

A=CHANNEL WIDTH
B=CHANNEL DEPTH
C=FRAME HEIGHT
D=WHEEL HEIGHT

HEADQUARTERS:
Industrial Area of Larisa
Postal Code 41004, BOX 3053 Greece
www.karkanias.gr

Phone: +30 2410 541386
Fax: +30 2410 541354
Email: info@karkanias.gr

3/12/18

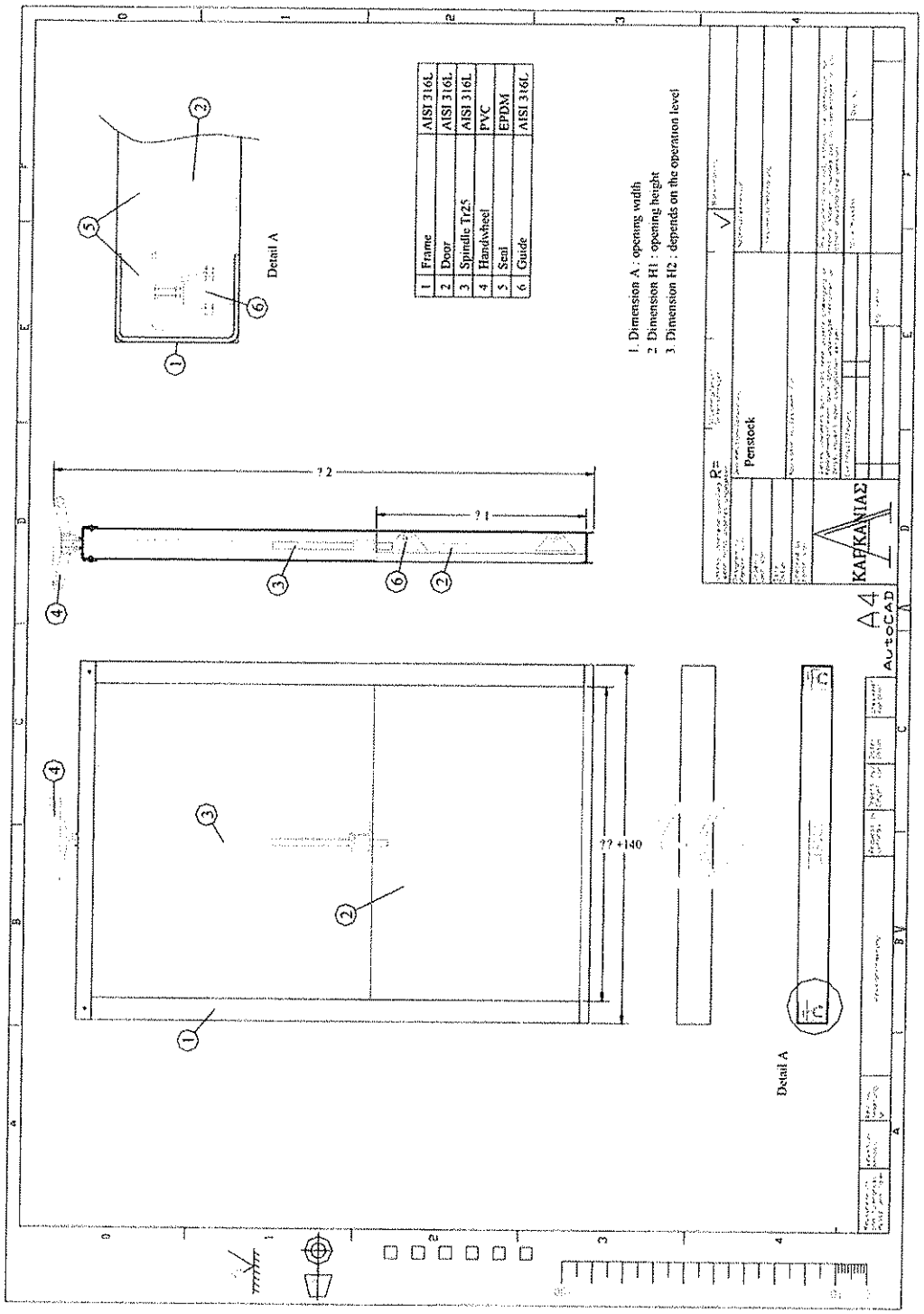

HEADQUARTERS:
Industrial Area of Larisa
Postal Code 41004, BOX 3053 Greece
www.karkanias.gr

Phone: +30 2410 541386
Fax: +30 2410 541354
Email: info@karkanias.gr

3/12/18

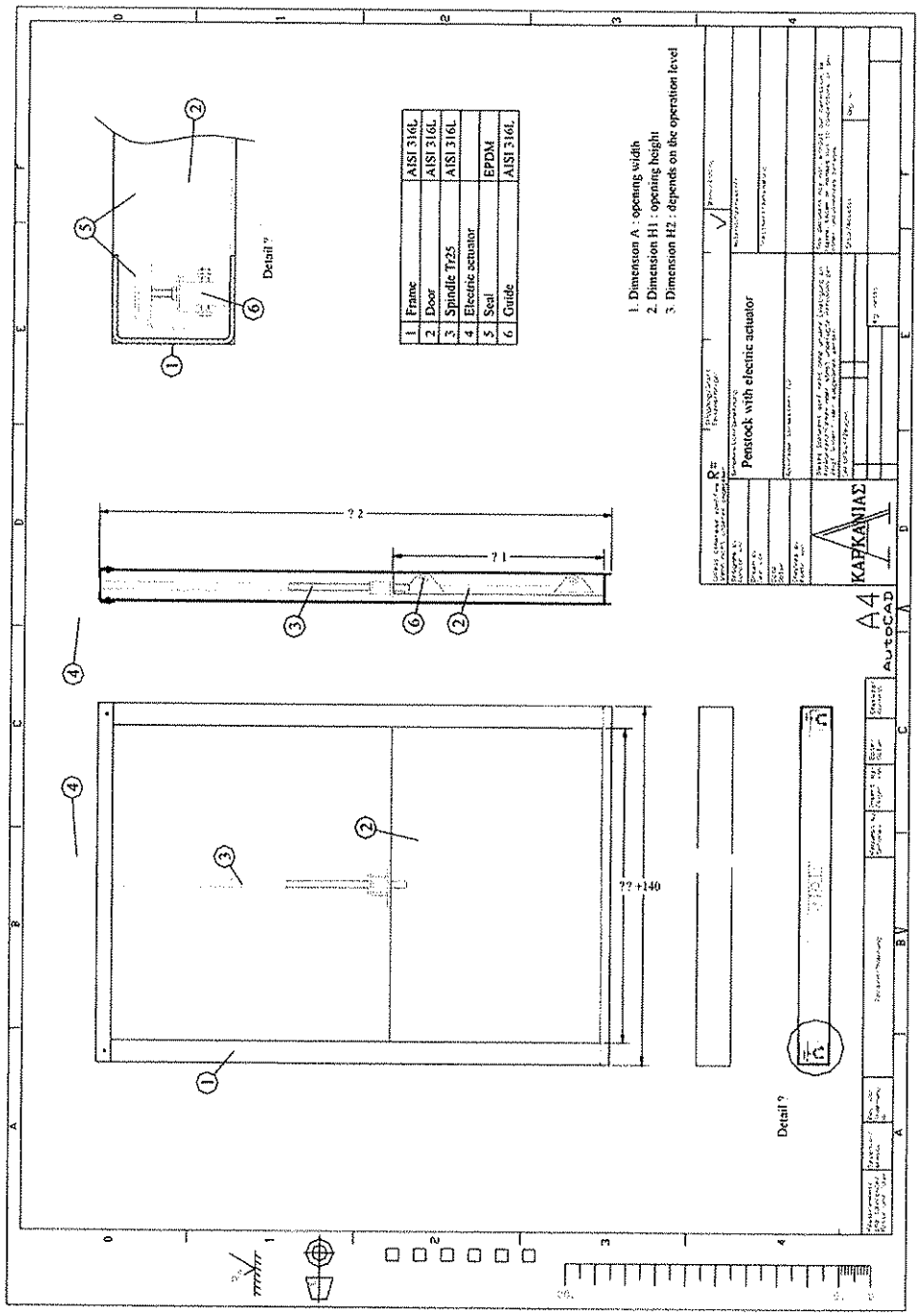

1	Frame	AISI 316L
2	Door	AISI 316L
3	Spindle Tr25	AISI 316L
4	Electric actuator	
5	Seal	EPDM
6	Guide	AISI 316L

HEADQUARTERS:
Industrial Area of Larisa
Postal Code 41004, BOX 3053 Greece
www.karkanias.gr

Phone: +30 2410 541386
Fax: +30 2410 541354
Email: info@karkanias.gr

3/12/18

EKATERINI VASSILIOU
LAWYER
ELEFTHERIAS 17 - TIRNAVOS 40100
LARISSA - GREECE
TEL. +30 24920 24240
LARISSA BAR ASSOCIATION
email: katvas9987@yahoo.gr

012

CERTIFICATE OF REGISTRATION

This is to certify that

KARKANIAS ENVIRONMENTAL TECHNOLOGY S.A.

Industrial Area of Larissa
PC 41004
PO Box 3053
Larissa
Greece

has been audited and found to meet the requirements of standard
ISO 9001:2008 Quality Management System

Scope of certification

General Contractor in Design, Construction, Operation and Maintenance of Water Management Liquid and Solid Wastes Projects in which Hydraulic, Electromechanical, Structural, Industrial, Energy Projects, Roads and Ports Construction are Included.

Certificate number: 10096

Issue number: 2017-01

Certificate start date: 19 February 2017

Certificate expiry date: 14 September 2018

Date of initial certification: 19 February 2014

Karen Prendergast
Sector Director - Certification
Exova BM TRADA

Exova (UK) Ltd, (T/A Exova BM TRADA), Chiltern House, Stocking Lane, High Wycombe, Buckinghamshire, HP14 4ND, UK
Registered Office: Exova (UK) Ltd, Lochend Industrial Estate, Newbridge, Midlothian EH28 8PL United Kingdom. Reg No. SC070429.

This certificate remains the property of Exova (UK) Ltd. This certificate and all copies or reproductions of the certificate shall be returned to Exova (UK) Ltd or destroyed if requested. Further clarification regarding the scope of this certificate and verification of the certificate is available through Exova BM TRADA or at the above address or at www.exovabmtrada.com

The use of the UKAS accreditation mark indicates accreditation in respect of those activities covered by the accreditation certification 012

Multisite clients - The scope of certification shown above includes the participating sites shown in appendix A

3/12/18

ΕΚΑΤΕΡΙΝΙ ΒΑΣΣΙΛΙΟΥ
LAWYER
ELEFTHERIAS 17 - TIRNAVOS 40100
LARISSA - GREECE
TEL. +30 24920 24240
LARISSA BAR ASSOCIATION
email: katvas9987@yahoo.gr

012

CERTIFICATE OF REGISTRATION

This is to certify that

KARKANIAS ENVIRONMENTAL TECHNOLOGY S.A.
Industrial Area of Larissa
PC 41004
PO Box 3053
Larissa
Greece

has been audited and found to meet the requirements of standard
ISO 14001:2004 Environmental Management System

Scope of certification

General Contractor in Design, Construction, Operation and Maintenance of Water Management Liquid and Solid Wastes Projects in which Hydraulic, Electromechanical, Structural, Industrial, Energy Projects, Roads and Ports Construction are included.

Certificate number: 2377

Issue number: 2017-01

Certificate start date: 19 February 2017

Certificate expiry date: 14 September 2018

Date of initial certification: 19 February 2014

Karen Prendergast
Sector Director - Certification
Exova BM TRADA

Exova (UK) Ltd, (T/A Exova BM TRADA), Chiltern House, Stocking Lane, High Wycombe, Buckinghamshire, HP14 4ND, UK
Registered Office: Exova (UK) Ltd, Lochend Industrial Estate, Newbridge, Midlothian EH28 8PL United Kingdom. Reg No. SC070429.

This certificate remains the property of Exova (UK) Ltd. This certificate and all copies or reproductions of the certificate shall be returned to Exova (UK) Ltd or destroyed if requested. Further clarification regarding the scope of this certificate and verification of the certificate is available through Exova BM TRADA or at the above address or at www.exovabmtrada.com

The use of the UKAS accreditation mark indicates accreditation in respect of those activities covered by the accreditation certificate 012

Multisite clients - The scope of certification shown above includes the participating sites shown in appendix A

3/12/18

EKATERINI VASSILIOU
LAWYER
ELEFTHERIAS 17 - TIRNAVOS 40100
LARISSA - GREECE
TEL. +30 24920 24240
LARISSA BAR ASSOCIATION
email: katvas9987@yahoo.gr

CERTIFICATE OF REGISTRATION

This is to certify that

KARKANIAS ENVIRONMENTAL TECHNOLOGY S.A.
Industrial Area of Larissa
PC 41004
PO Box 3053
Larissa
Greece

has been audited and found to meet the requirements of standard
OHSAS 18001:2007 Health & Safety Management System

Scope of certification

General Contractor in Design, Construction, Operation and Maintenance of Water Management Liquid and Solid Wastes Projects in which Hydraulic, Electromechanical, Structural, Industrial, Energy Projects, Roads and Ports Construction are Included.

012

Certificate number: 796

Issue number: 2017-01

Certificate start date: 19 February 2017

Certificate expiry date: 18 February 2020

Date of initial certification: 19 February 2014

Karen Prendergast
Sector Director - Certification
Exova BM TRADA

Exova (UK) Ltd, (T/A Exova BM TRADA), Chiltern House, Stocking Lane, High Wycombe, Buckinghamshire, HP14 4ND, UK
Registered Office: Exova (UK) Ltd, Eochend Industrial Estate, Newbridge, Midlothian EH28 8PL United Kingdom. Reg No. SC070429.

This certificate remains the property of Exova (UK) Ltd. This certificate and all copies or reproductions of the certificate shall be returned to Exova (UK) Ltd or destroyed if requested. Further clarification regarding the scope of this certificate and verification of the certificate is available through Exova BM TRADA or at the above address or at www.exovabmtrada.com

The use of the UKAS accreditation mark indicates accreditation in respect of those activities covered by the accreditation certification 012

Multisite clients - The scope of certification shown above includes the participating sites shown in appendix A

3/12/18

© Siemens AG 2015

Overview

The Siemens SITRANS LUT400 series controllers are compact, single point, long-range ultrasonic controllers for continuous level or volume measurement of liquids, slurries, and solids, and high accuracy monitoring of open channel flow.

Benefits

- Small 1/2 DIN enclosure [144 h x 144 d x 146 w mm (5.7 x 5.7 x 5.75 inch)] with standard universal mounting bracket for wall, pipe, and DIN rail, plus an optional panel mount
- Easy to use HMI display with local four-button programming, menu-driven parameters, and Wizard support for key applications
- English, German, French, Spanish, Chinese, Italian, Portuguese, and Russian texts on the HMI.
- Level, Volume, OCM Flow monitoring
- Three relays combined with a suite of pump, alarm, and relay control features
- HART Communications
- EDDs for SIMATIC PDM, AMS Device Manager, and Field Communicator 375/475, plus DTMs for FDTs (Field Device Tools)
- Web browser for local programming from an intuitive web-based interface
- Two discrete inputs for backup level override and pump interlock functions
- Echo profile and trend views from the local display
- Patented digital receiver for improved performance in electrically noisy applications (close proximity to VSDs)
- Real time clock with daylight savings time, supporting an integrated datalogger and energy saving algorithms for minimizing pump operation during high cost energy periods
- Removable terminal blocks for ease of wiring
- MCERTS Certified for Open Channel Flow

Application

The SITRANS LUT400 comes in three different models, depending on the application, level of performance and functionality required:

- SITRANS LUT420 Level Controller: Level or volume measurement of liquids, slurries, and solids, as well as basic pump control functions, and basic data logging capability
- SITRANS LUT430 Level, Pump and Flow Controller: Includes all features of the LUT420 plus a full suite of advanced pump control and alarm functionality, open channel flow monitoring, and basic flow data logging capability
- SITRANS LUT440 High Accuracy OCM: Our most featured, highest accuracy model. Includes all features of the LUT430, plus the industry's best accuracy (± 1 mm within 3 m), full suite of advanced control functionality, and enhanced flow logging capability
- Key applications: wet wells, reservoirs, flumes/weirs, chemical storage, liquid storage, hoppers, crusher bins, dry solids storage

3/12/18

© Siemens AG 2015

Technical specifications

Mode of Operation	Ultrasonic level, volume, pump, and open channel flow
Measuring range	0.3 ... 60 m (1 ... 196 ft), transducer dependent
Input	
Discrete	0 ... 50 V DC switching level Logical 0 ≤ 10 V DC Logical 1 = 10 ... 50 V DC Max. 3 mA
Output	
Transducer frequency	10 ... 52 kHz
Ultrasonic transducer	Compatible transducers: All EchoMax and ST-H series transducers
Relays	• 1 SPDT Form C, NO or NC relay, rated 1A at 250 V AC, non-inductive and 3A at 30 V DC • 2 SPST Form A, NO relays, rated 5A at 250 V AC, non-inductive and 3 A at 30 V DC
mA output	4 ... 20 mA, isolated
• Max. load	600 Ω max. in ACTIVE mode, 750 Ω max. in PASSIVE mode
• Resolution	0.1 % of range
Accuracy	
Error in measurement	• Standard operation: ± 1 mm (0.04 inch) plus 0.17 % of measured distance • High accuracy OCM: ± 1 mm (0.04 inch), within 3 m (9.84 ft) range
Resolution	• Standard operation: 0.1 % of range or 2 mm (0.08 inch), whichever is greater • High accuracy OCM: 0.6 mm (0.02 inch), within 3 m (9.84 ft) range
Temperature compensation	• -40 ... +150 °C (-40 ... +300 °F) • Integral temperature sensor in transducer • External TS-3 temperature sensor (optional) • Programmable fixed temperature values
Rated operating conditions	
Installation conditions	
• Location	Indoor/outdoor
• Installation category	II
• Pollution degree	4
Ambient conditions	
• Ambient temperature (enclosure)	-20 ... +50 °C (-4 ... +122 °F)

Design	
Weight	
• Enclosure with display lid	1.3 kg (2.87 lb)
• Enclosure with blank lid:	1.2 kg (2.65 lb)
Material (enclosure)	Polycarbonate
Degree of protection	
• Enclosure with display or blank lid:	IP65/Type 4X/NEMA 4X
• Enclosure with blank lid and knock-out removed:	IP20
Remote display lid	IP65/Type 3/NEMA 3
Cable	
Transducer and mA output signal	• Transducer, mA output: 2 copper conductors, twisted, with foil shield/drain wire, 300 V 0.5 ... 0.75 mm² (22 ... 18 AWG) • Relay/power to be copper conductors per local requirements to meet 250 V 5 A contact rating
Max. separation between transducer and transceiver	365 m (1 200 ft)
Displays and controls	60 x 40 mm (2.36 x 1.57 inch) removable LCD, 240 x 160 pixels resolution, operational up to 5 m from enclosure base
Programming	
• Primary	4 Local push buttons
• Secondary	• PC running SIMATIC PDM • PC running Emerson AMS Device Manager • PC running a web browser • PC running a Field Device Tool (FDT) • Field Communicator 375/475 (FC375/FC475)
Memory	• 512 kB flash EPROM • 1.5 MByte flash for data logging
Power supply	
AC version	100 ... 230 V AC ± 15 %, 50/60 Hz, 36 VA Fuse: 5 x 20 mm, Slow Blow, 0.25 A, 250 V
DC version	10 ... 32 V DC, 10 W Fuse: 5 x 20 mm, Slow Blow, 1.6 A, 125 V
Certificates and approvals	
General	$CSA_{US/C}$, CE, FM, UL listed, RCM, MCERTS certified for Open Channel Flow
Hazardous	
• Non-incendive (Canada)	CSA Class I, Div. 2, Groups A, B, C, D; Class II, Div. 2, Groups F, G; Class III
• Shipping	Lloyd's Register, ABS
Communication	HART 7.0, USB

3/12/18

© Siemens AG 2015

Category	Feature	SITRANS LUT420 Level Controller	SITRANS LUT430 Level, pump and flow controller	SITRANS LUT440 High accuracy OCM controller
Operations	Level, space, and distance measurement	✓	✓	✓
	Open channel flow measurement		✓	✓
	Volume conversion	✓	✓	✓
Specifications	Compatible with EchoMax and ST-H transducers	✓	✓	✓
	Standard accuracy: ± 1 mm +0.17 % of measured distance	✓	✓	✓
	High accuracy: ± 1 mm within 3 meters			✓
	Mounting options: wall or panel, pipe, DIN-rail	✓	✓	✓
Data logging and communications	HART communications	✓	✓	✓
	4 ... 20 mA output (active and passive)	✓	✓	✓
	Integrated datalogger for measurement value and alarms	✓	✓	✓
	Integrated datalogger for fixed rate flow logging		✓	✓
	Integrated datalogger for variable rate flow logging triggered by changes in flow condition			✓
	Daily data logging for maximum, minimum and average flow, daily totalized volume, and minimum and maximum temperature		✓	✓
Flow monitoring	High accuracy open channel flow measurement			✓
	9 digit daily and running flow totalizers		✓	✓
	High and low flowrate alarms		✓	✓
	External totalizer and sampler control		✓	✓
	MCERTS Class 1 Certification			✓
	MCERTS Class 2 Certification		✓	
Pump control	Energy saving algorithms for pump control		✓	✓
	Wall cling reduction	✓	✓	✓
	Pump run-on functionality		✓	✓
	Pump start and power resumption delays		✓	✓
	Alternate duty pump routines	✓	✓	✓
	Fixed duty and service ratio pump routines		✓	✓
	Pumped volume totalizer		✓	✓
	Submergence detection	✓	✓	✓
	Discrete input pump interlocks		✓	✓
	Time to spill calculation		✓	✓

3/12/18

© Siemens AG 2015

Selection and Ordering data		Article No.
SITRANS LUT420 and LUT430		↗ **7ML5050-**
Compact ultrasonic level controllers for continuous short to long-range level or volume measurement of liquids, slurries, and solids. Both units include basic relay functions for pumps, alarms, and other controls, plus onboard data logging. LUT430 offers additional advanced pump control and alarm functionality, open channel flow monitoring, and basic flow data logging capability. Functionality varies by model.		**0** ☐☐ - ☐ **0**
↗ Click on the Article No. for the online configuration in the PIA Life Cycle Portal.		
Model		
SITRANS LUT420 - Level controller	☆	**A**
SITRANS LUT430 - Level, Pump & Flow controller	☆	**B**
Enclosure display options		
With display	☆	**A**
With remote panel mount display [Includes panel mount cable extension, 2.5 m (8.2 ft)]	☆	**B**
No display (blank lid provided)	☆	**C**
Note: Enclosure includes back-plate for wall and pipe mounting, and an integrated clip for DIN-rail mounting. DIN-rail mounting for standard TS35 x 7.5 and TS35 x 15 mm DIN-rail to IEC 60715, EN 60715		
Input voltage		
100 ... 230 V AC ± 15 %	☆	**1**
10 ... 32 V DC	☆	**2**
Cable inlet		
3 cable inlets, cable glands not supplied	☆	**1**
3 cable inlets, 3 M20 plastic cable glands supplied	☆	**2**
Number of measurement points		
Single point system (includes one transducer input, one mA output, and one external temperature sensor input)	☆	**1**
Communications and I/O		
HART, 2 discrete inputs, 3 relays	☆	**D**
Approvals		
General purpose CE, FM, $CSA_{US/C}$, UL, RCM	☆	**A**
Hazardous locations CSA Class I, II, III, Div. 2 (Groups A, B, C, D, F, G)		**C**

☆ We can offer shorter delivery times for configurations designated with the Quick Ship Symbol ☆. For details see page 9/5 in the appendix.

Selection and Ordering data	Order code
Further designs	
Please add "**-Z**" to Article No. and specify Order code(s).	
Manufacturer's test certificate M to DIN 55350, Part 18 and to ISO 9000	**C11**
Stainless steel tag [69 x 50 mm (2.71 x 1.97 inch)] Measuring-point number/identification (max. 27 characters) specify in plain text	**Y15**
Namur NE43 failsafe setting - device preset to failsafe < 3.6 mA	**N07**

Operating instructions	Article No.
English	**A5E33329501**
French	**7ML1998-5MV11**
Spanish	**7ML1998-5MV21**
German	**A5E35690863**
Italian	**7ML1998-5MV51**
Multi-language compact operating instructions Note: The operating instructions should be ordered as a separate line item on the order	**7ML1998-5XU81**

Selection and Ordering data	Article No.
Communications Manual	
English	**A5E33701270**
French	**7ML1998-5NE11**
Spanish	**7ML1998-5NE21**
German	**7ML1998-5NE31**
Italian Note: The communications manual should be ordered as a separate line item on the order.	**7ML1998-5NE51**
Accessories	
Tag, stainless steel, 12 x 45 mm (0.47 x 1.77 inch), one text line, suitable for enclosure	**7ML1930-1AC**
TS-3 Temperature Sensor - see TS-3 on page 4/189	**7ML1813-...**
Panel mount cable extension, 2.5 m (8.2 ft)	**7ML1930-1GF**
Qty 3 cable glands and retaining nuts	**7ML1930-1GB**
USB cable, 2 m (6.56 ft) - Standard USB-A to USB-mini B	**7ML1930-1GD**
Hart modem/USB (for use with a PC and SIMATIC PDM)	**7MF4997-1DB**
Sunshield, 304 stainless steel	**7ML1930-1GE**
SITRANS RD100, loop powered display - see Chapter 7	**7ML5741-...**
SITRANS RD200, universal input display with Modbus conversion - see Chapter 7	**7ML5740-...**
SITRANS RD300, dual line display with totalizer and linearization curve and Modbus conversion - see Chapter 7	**7ML5744-...**
SITRANS RD500 web, universal remote monitoring solution for instrumentation - see Chapter 7	**7ML5750-...**
Spare parts	
Panel mount retrofit kit (convert standard unit with display to panel mount version)	**7ML1830-1PA**
Terminal block replacement kit (5 piece kit with one of each removable terminal)	**7ML1830-1PB**
Wall/Pipe mount plate	**7ML1830-1PC**
Enclosure (include blank label)	**7ML1830-1PD**
SITRANS LUT400 Lid (with Display)	**7ML1830-1PE**
SITRANS LUT400 Lid (blank)	**7ML1830-1PF**
Fuse - AC (0.25 A, 250 V, Slow Blow)	**7ML1830-1PG**
Fuse - DC (1.6 A, 125 V, Slow Blow)	**7ML1830-1PH**
Battery BR2032	**7ML1830-1PJ**
Panel mount gasket and fastener kit	**7ML1830-1PK**
DIN-rail clip	**7ML1830-1PL**

☆ We can offer shorter delivery times for configurations designated with the Quick Ship Symbol ☆. For details see page 9/5 in the appendix.

© Siemens AG 2015

Level Measurement

Continuous level measurement - Ultrasonic controllers

SITRANS LUT400 series

Selection and Ordering data	Article No.
SITRANS LUT440 ↗ The SITRANS LUT440 is the most accurate and featured model in the LUT400 series. It includes high accuracy open channel monitoring, relay functions for external samplers, totalizers, alarms, and enhanced data logging, as well as all pump and control functions available with other models in the LUT400 series.	**7ML5050-** 0 - 0
↗ Click on the Article No. for the online configuration in the PIA Life Cycle Portal.	
Model	
SITRANS LUT440 - High accuracy Open Channel Monitor[1] ⊛	C
Enclosure display options	
With display ⊛	A
With remote panel mount display [Includes panel mount cable extension, 2.5 m (8.2 ft)] ⊛	B
No display (blank lid provided) ⊛	C
Note: Enclosure includes back-plate for wall and pipe mounting, and an integrated clip for DIN-rail mounting. DIN-rail mounting for standard TS35 x 7.5 and TS35 x 15 mm DIN-rail to IEC 60715, EN 60715	
Input voltage	
100 ... 230 V AC ± 15 % ⊛	1
10 ... 32 V DC ⊛	2
Cable inlet	
3 cable inlets, cable glands not supplied ⊛	1
3 cable inlets, 3 M20 plastic cable glands supplied ⊛	2
Number of measurement points	
Single point system (includes one transducer input, one mA output, and one external temperature sensor input) ⊛	1
Communications and I/O	
HART, 2 discrete inputs, 3 relays ⊛	D
Approvals	
General purpose CE, FM, $CSA_{US/C}$, UL, RCM ⊛	A
Hazardous locations CSA Class I, II, III, Div. 2, (Groups A, B, C, D, F, G)	C

[1] Compatible with all EchoMax Transducers. High accuracy OCM performance with the use of an XRS-5 transducer and TS-3 temperature sensor (each sold separately).

⊛ We can offer shorter delivery times for configurations designated with the Quick Ship Symbol ⊛. For details see page 9/5 in the appendix.

Selection and Ordering data	Order code
Further designs	
Please add "-Z" to Article No. and specify Order code(s).	
Manufacturer's test certificate M to DIN 55350, Part 18 and to ISO 9000 ⊛	C11
Stainless steel tag [69 x 50 mm (2.71 x 1.97 inch)]: Measuring-point number/identification (max. 27 characters) specify in plain text ⊛	Y15
Namur NE43 failsafe setting - device preset to failsafe < 3.6 mA ⊛	N07
[illegible]	Article No.
English	A5E33329501
French	7ML1998-5MV11
Spanish	7ML1998-5MV21
German	A5E35690863
Italian	7ML1998-5MV51
Note: The operating instructions should be ordered as a separate line item on the order	

Selection and Ordering data	Article No.
Communications Manual	
English	A5E33701270
French	7ML1998-5NE11
Spanish	7ML1998-5NE21
German	7ML1998-5NE31
Italian	7ML1998-5NE51
Note: The communications manual should be ordered as a separate line item on the order.	
Accessories	
Tag, stainless steel, 12 x 45 mm (0.47 x 1.77 inch), one text line, suitable for enclosure	7ML1930-1AC
TS-3 Temperature Sensor - see TS-3 on page 4/189	7ML1813-...
Panel mount cable extension 2.5 m (8.2 ft)	7ML1930-1GF
Qty 3 cable glands and retaining nuts	7ML1930-1GB
USB cable 2 m (6.56 ft) - Standard USB-A to USB-mini B	7ML1930-1GD
HART modem/USB (for use with PC and SIMATIC PDM)	7MF4997-1DB
Sunshield, 304 stainless steel	7ML1930-1GE
SITRANS RD100, loop powered display - see Chapter 7	7ML5741-...
SITRANS RD200, universal input display with Modbus conversion - see Chapter 7	7ML5740-...
SITRANS RD300, dual line display with totalizer and linearization curve and Modbus conversion - see Chapter 7	7ML5744-...
SITRANS RD500 web, universal remote monitoring solution for instrumentation - see Chapter 7	7ML5750-...
Spare parts	
Panel mount retrofit kit (convert standard unit with display to panel mount version)	7ML1830-1PA
Terminal block replacement kit (5 piece kit with one of each removable terminal)	7ML1830-1PB
Wall/Pipe mount plate	7ML1830-1PC
Enclosure (include blank label)	7ML1830-1PD
SITRANS LUT400 Lid (with Display)	7ML1830-1PE
SITRANS LUT400 Lid (blank)	7ML1830-1PF
Fuse - AC (0.25 A, 250 V, Slow Blow)	7ML1830-1PG
Fuse - DC (1.6 A, 125 V, Slow Blow)	7ML1830-1PH
Battery BR2032	7ML1830-1PJ
Panel mount gasket and fastener kit	7ML1830-1PK
DIN-rail clip	7ML1830-1PL

⊛ We can offer shorter delivery times for configurations designated with the Quick Ship Symbol ⊛. For details see page 9/5 in the appendix

l
3/12/18

© Siemens AG 2015

Dimensional drawings

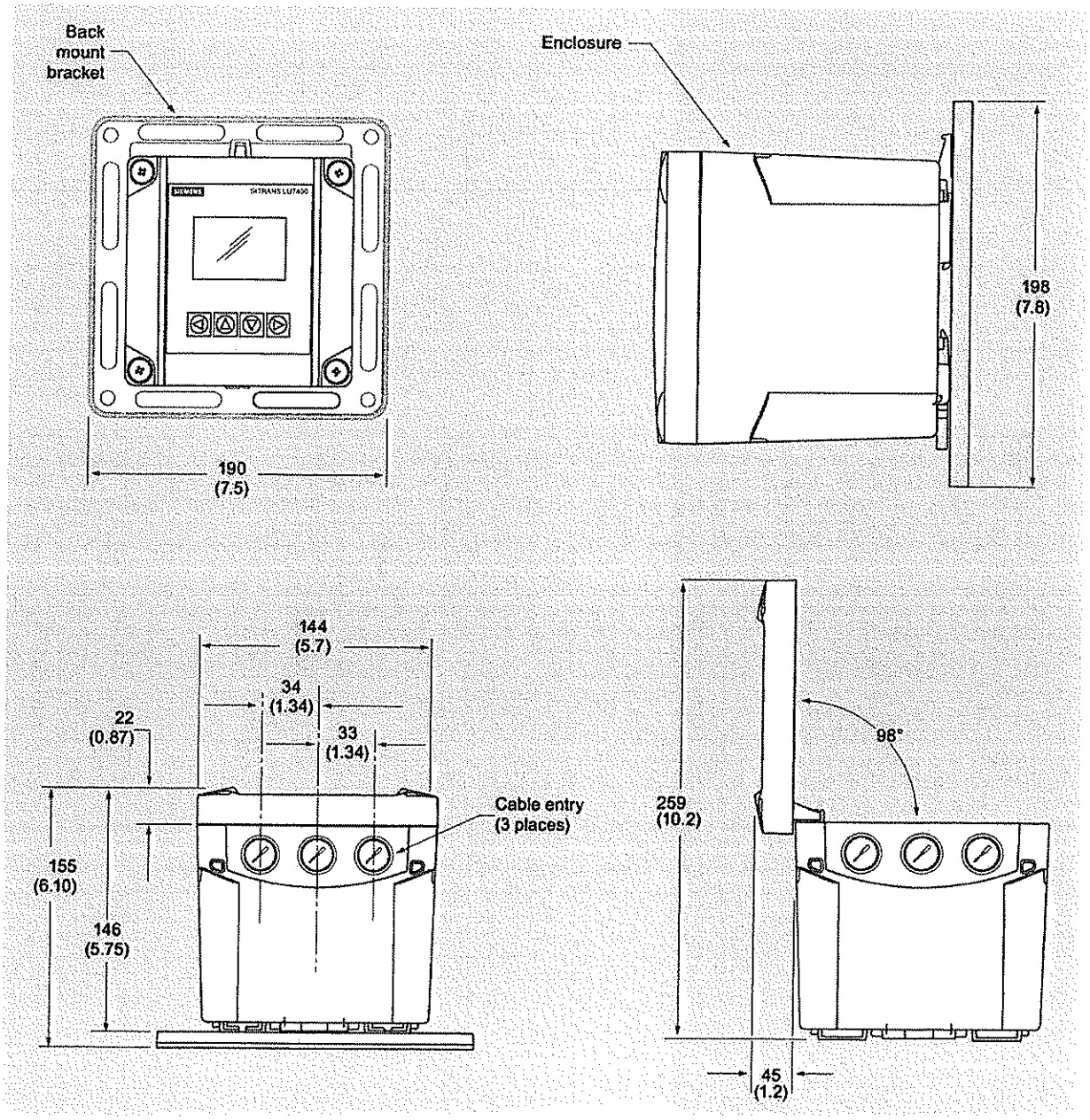

SITRANS LUT400, dimensions in mm (inch)

© Siemens AG 2015

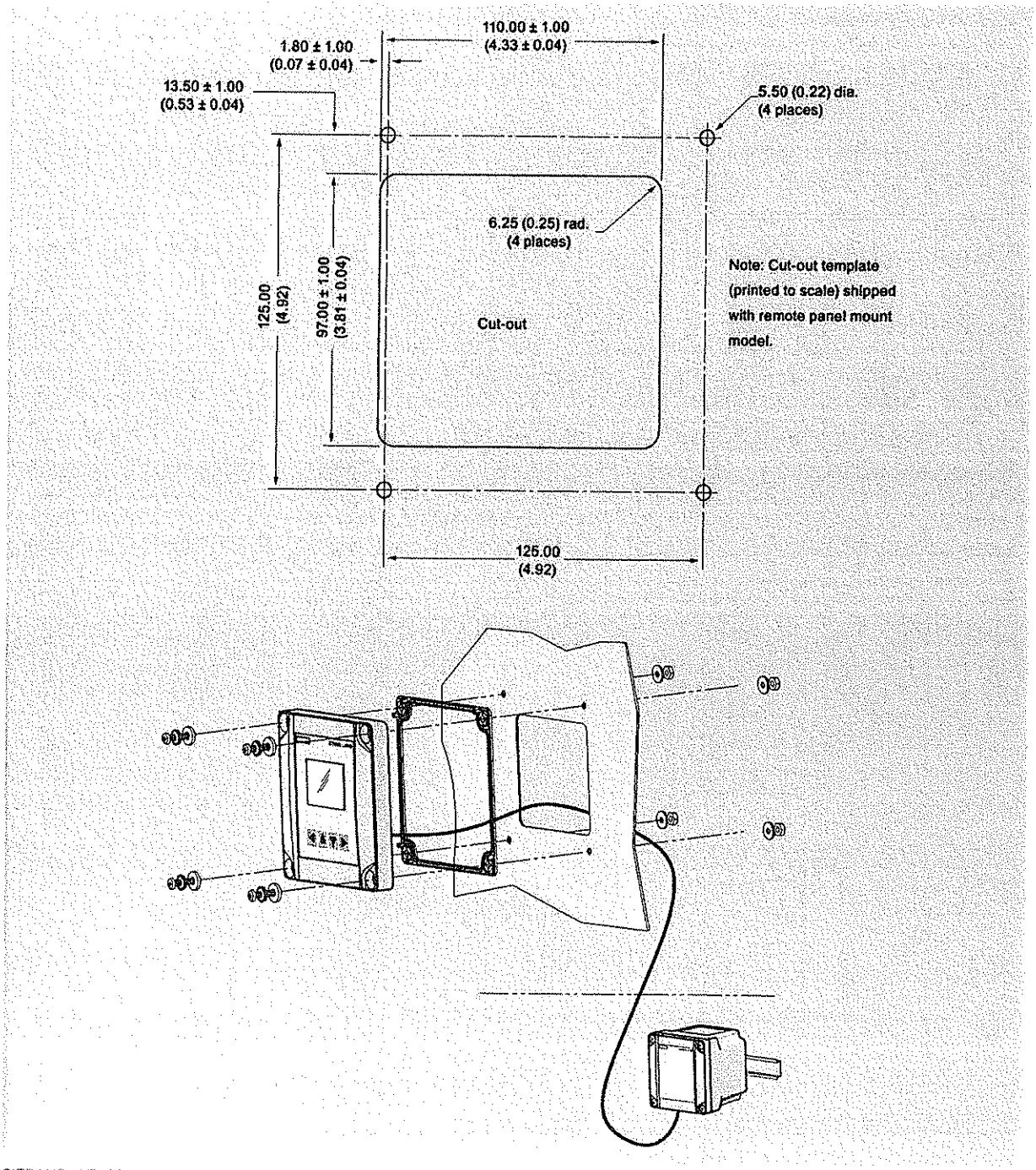

SITRANS LUT400, dimensions in mm (inch)

3/12/18

© Siemens AG 2015

Schematics

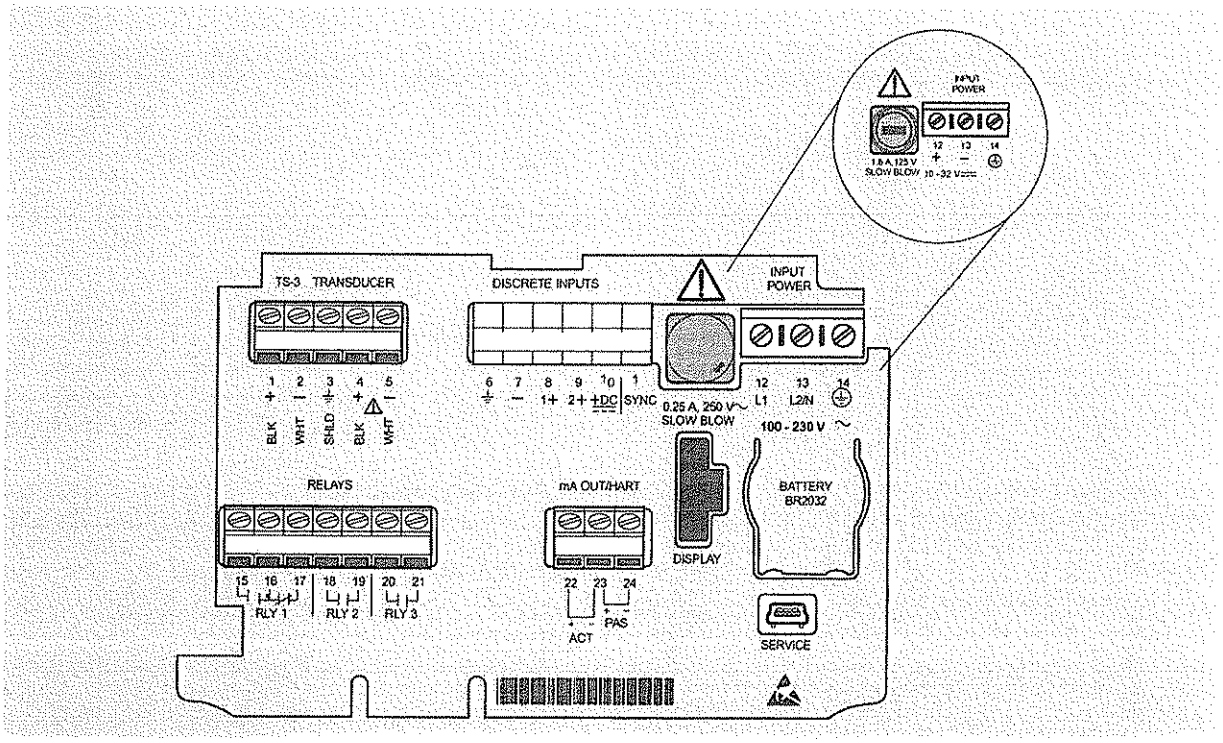

SITRANS LUT400 connections

3/12/18

© Siemens AG 2015

Level Measurement

Continuous level measurement - Ultrasonic transducers

Overview

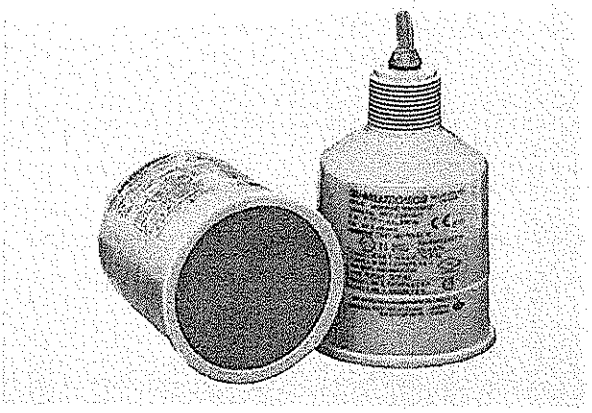

EchoMax XRS-5 ultrasonic transducer provides reliable, continuous level monitoring of liquids and slurries in narrow lift stations/ wet wells, flumes, weirs and filter beds using a beam angle of just 10° and a CSM rubber face.

Benefits

- Narrow beam angle of only 10°
- Chemically resistant PVDF copolymer enclosure and CSM rubber face
- Measuring range: 8 m (26 ft) for measurement of liquids and slurries
- Fully submersible: IP68 degree of protection
- Easy installation with 1" NPT or R 1" BSPT connection

Application

The XRS-5 is non-contacting with a measuring range from 0.3 ... 8 m (1 ... 26 ft). Advanced echo processing ensures reliable data even in conditions with obstructions, turbulence and foam.

The hermetically sealed CSM rubber face and the PVDF copolymer enclosure are designed for maximum resistance to methane, salt water, caustics and harsh chemicals common to wastewater installations. With an IP68 degree of protection, this rugged sensor is fully submersible in the event of flood conditions. Use a submergence shield if full submergence is possible in the application. A submergence shield will maintain a high level reading output during submerged conditions.

The low-cost XRS-5 transducer is compatible with a full range of Siemens controllers, from a basic system for high/low alarm or simple pump control, up to advanced control systems with communications, telemetry and SCADA integration capabilities.

- Key Applications: wet wells, flumes, weirs, filter beds

Technical specifications

Mode of operation	
Measuring principle	Ultrasonic transducer
Input	
Measuring range	0.3 ... 8 m (1 ... 26 ft), dependent on application
Output	
Frequency	44 kHz
Beam angle	10°
Accuracy	
Temperature error	Compensated by integral temperature sensor
Rated operating conditions	
Vessel pressure	Normal atmospheric pressure
Ambient conditions	
• Ambient temperature	-20 ... +65 °C (-4 ... +149 ° F)
Design	
Weight (approximate shipping weight of sensor with standard cable length)	1.2 kg (2.6 lb)
Material (enclosure)	PVDF copolymer enclosure and CSM face
Process connection	1" NPT [(Taper), ANSI/ASME B1.20.1] or R 1" [(BSPT), EN 10226]
Degree of protection	IP65/IP68
Cable connection	2-core shielded/twisted, 0.5 mm^2 (20 AWG), PVC sheath
Cable (max. length)	• 365 m (1 200 ft) with RG 62 A/U coaxial cable • 365 m (1 200 ft) with 2-core twisted pair, foil shield, 0.5 mm^2 (20 AWG), PVC sheath, only for MultiRanger 100/200
Options	
Flange version	Factory flange with PTFE face for ASME, EN or JIS configuration
Submergence shield	For applications with flooding possible
Certificates and approvals	CE, RCM, KCC CSA Class I, Div. 2, Groups A,B,C,D, Class II, Div. 1 Groups E,F,G FM Class I, Zone 1, AEx m IIC, T6 Class II, III, Div. 1, Groups E,F,G T6 ATEX II 2GD / IECEx / INMETRO Ex mb IIC T6 Gb, Ex tb IIIC T85 °C Db

3/12/18

© Siemens AG 2015

Selection and Ordering data		Article No.
EchoMax XRS-5 transducer	↗	**7ML1106-**
With a beam angle of 10°, the XRS-5 provides reliable, continuous level monitoring of liquids and slurries in narrow lift stations/wet wells, flumes, weirs and filter beds. Measuring range: min. 0.3 m (1 ft), max. 8 m (26 ft)		☆ ☆ **0 - 0** ☆
↗ Click on the Article No. for the online configuration in the PIA Life Cycle Portal.		
Process connection		
1" NPT [(Taper), ANSI/ASME B1.20.1]	☆	**1**
R 1" [(BSPT), EN 10226]	☆	**2**
Cable length		
5 m (16.40 ft)	☆	**A**
10 m (32.81 ft)	☆	**B**
30 m (98.43 ft)		**C**
Facing		
Standard (CSM rubber)	☆	**A**
PTFE (flange versions)		**B**
Approvals		
CE, RCM, KCC, CSA Class I, Div. 2, Groups A,B,C,D, Class II, Div. 1 Groups E,F,G FM Class I, Zone 1, AEx m IIC, T6 Class II, III, Div. 1, Groups E,F,G T6 ATEX II 2GD / IECEx / INMETRO Ex mb IIC T6 Gb, Ex tb IIIC T85 °C Db	☆	**2**
Mounting flange (flush mount)		
None	☆	**A**
3" ASME, 150 lb, flat faced		**B**
4" ASME, 150 lb, flat faced		**C**
6" ASME, 150 lb, flat faced		**D**
DN 80, PN 10/16, Type A, flat faced		**J**
DN 100, PN 10/16, Type A, flat faced		**K**
DN 150, PN 10/16, Type A, flat faced		**L**
JIS10K 3B style		**Q**
JIS10K 4B style		**R**
JIS10K 6B style		**S**
Note: Flange bolting patterns and facings dimensionally correspond to the applicable ASME B16.5 or EN 1092-1, or JIS B 2220 standard.		

Operating Instructions	Article No.
Quick Start Manual, multi-language	**A5E32299685**
Applications Guidelines, multi-language	**7ML1998-5HV61**
Note: The Applications Guidelines should be ordered as a separate line item on the order.	
This device is shipped with the Siemens Milltronics manual DVD containing the ATEX Quick Start and Operating Instructions library.	

☆ We can offer shorter delivery times for configurations designated with the Quick Ship Symbol ☆. For details see page 9/5 in the appendix.

Selection and Ordering data	Order code
Further designs Please add "**-Z**" to Article No. and specify Order code(s).	
Acrylic coated, stainless steel tag [13 x 45 mm (0.5 x 1.75 inch)]: Measuring-point number/ identification (max. 16 characters) specify in plain text	☆ **Y17**

Accessories	Article No.
Tag, stainless steel with hole, 12 x 45 mm (0.47 x 1.77 inch), one text line for fastening on sensors	**7ML1930-1BJ**
Submergence shield kit	**7ML1830-1BH**
Easy Aimer 2, aluminum, NPT with ¾" x 1" PVC coupling	**7ML1830-1AQ**
Easy Aimer 2, aluminum with M20 adapter and 1" and 1½" BSPT aluminum couplings	**7ML1830-1AX**
Easy Aimer 304, NPT with 1" stainless steel coupling	**7ML1830-1AU**
Easy Aimer 304, with M20 adapter and 1" and 1½" BSPT 304 stainless steel couplings	**7ML1830-1GN**
FMS-200 universal box bracket, mounting kit	**7ML1830-1BK**
FMS-210 channel bracket, wall mount	**7ML1830-1BL**
FMS-220 extended channel bracket, wall mount	**7ML1830-1BM**
FMS-310 channel bracket, floor mount	**7ML1830-1BN**
FMS-320 extended channel bracket, floor mount	**7ML1830-1BP**
FMS-350 bridge channel bracket, floor mount (see Mounting Brackets on page 4/187 for more information)	**7ML1830-1BQ**
1" NPT locknut, plastic	**7ML1830-1DS**
1" BSPT locknut, plastic	**7ML1830-1DR**

☆ We can offer shorter delivery times for configurations designated with the Quick Ship Symbol ☆. For details see page 9/5 in the appendix.

3/12/18

© Siemens AG 2015

Selection and Ordering data		Article No.
EchoMax XRS-5C transducer With a beam angle of 10°, the XRS-5 provides reliable, continuous level monitoring of liquids and slurries in narrow lift stations/wet wells, flumes, weirs and filter beds. Measuring range: min. 0.3 m (1 ft), max. 8 m (26 ft) ↗ Click on the Article No. for the online configuration in the PIA Life Cycle Portal.	↗	**7ML1105-** ▫▫▫▫ **1 - 0** ▫
Process connection 1" NPT [(Taper), ANSI/ASME B1.20.1]	✵	**1**
Cable length 5 m (16.40 ft) 10 m (32.81 ft) 30 m (98.43 ft)	✵ ✵	**A** **B** **C**
Facing Standard (CSM rubber) PTFE (flange versions)	✵	**A** **B**
Approvals CSA Class I Div. 1, Groups A,B,C,D; Class II Div. 1, Groups E,F,G; Class III	✵	**1**
Mounting flange (flush mount) None 3" ASME, 150 lb, flat faced 4" ASME, 150 lb, flat faced 6" ASME, 150 lb, flat faced Note: Flange bolting patterns and facings dimensionally correspond to the applicable ASME B16.5 or EN 1092-1, or JIS B 2220 standard.	✵	**A** **B** **C** **D**
Operating Instructions		Article No.
Quick Start Manual, multi-language		**A5E32299685**
Applications Guidelines, multi-language Note: The Applications Guidelines should be ordered as a separate line item on the order.		**7ML1998-5HV61**
This device is shipped with the Siemens Milltronics manual DVD containing the ATEX Quick Start and Operating Instructions library.		

✵ We can offer shorter delivery times for configurations designated with the Quick Ship Symbol ✵. For details see page 9/5 in the appendix.

Selection and Ordering data		Order code
Further designs Please add "**-Z**" to Article No. and specify Order code(s).		
Acrylic coated, stainless steel tag [13 x 45 mm (0.5 x 1.75 inch)]: Measuring-point number/ identification (max. 16 characters) specify in plain text	✵	**Y17**
Accessories		Article No.
Submergence shield kit		**7ML1830-1BH**
Easy Aimer 2, aluminum, NPT with ¾" x 1" PVC coupling		**7ML1830-1AQ**
Easy Aimer 304, NPT with 1" stainless steel coupling		**7ML1830-1AU**
FMS-200 universal box bracket, mounting kit		**7ML1830-1BK**
FMS-210 channel bracket, wall mount		**7ML1830-1BL**
FMS-220 extended channel bracket, wall mount		**7ML1830-1BM**
FMS-310 channel bracket, floor mount		**7ML1830-1BN**
FMS-320 extended channel bracket, floor mount		**7ML1830-1BP**
FMS-350 bridge channel bracket, floor mount (see Mounting Brackets on page 4/187 for more information)		**7ML1830-1BQ**

✵ We can offer shorter delivery times for configurations designated with the Quick Ship Symbol ✵. For details see page 9/5 in the appendix.

3/12/18

© Siemens AG 2015

Dimensional drawings

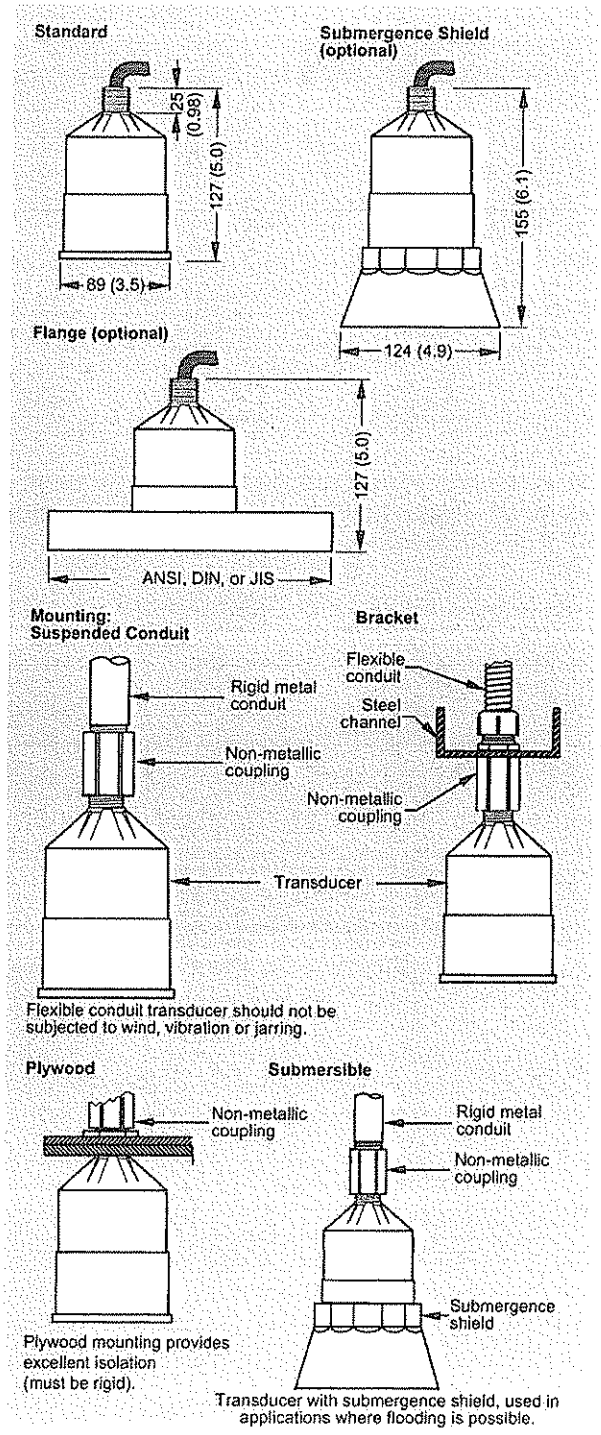

XRS-5 ultrasonic transducer, dimensions in mm (inch)

Schematics

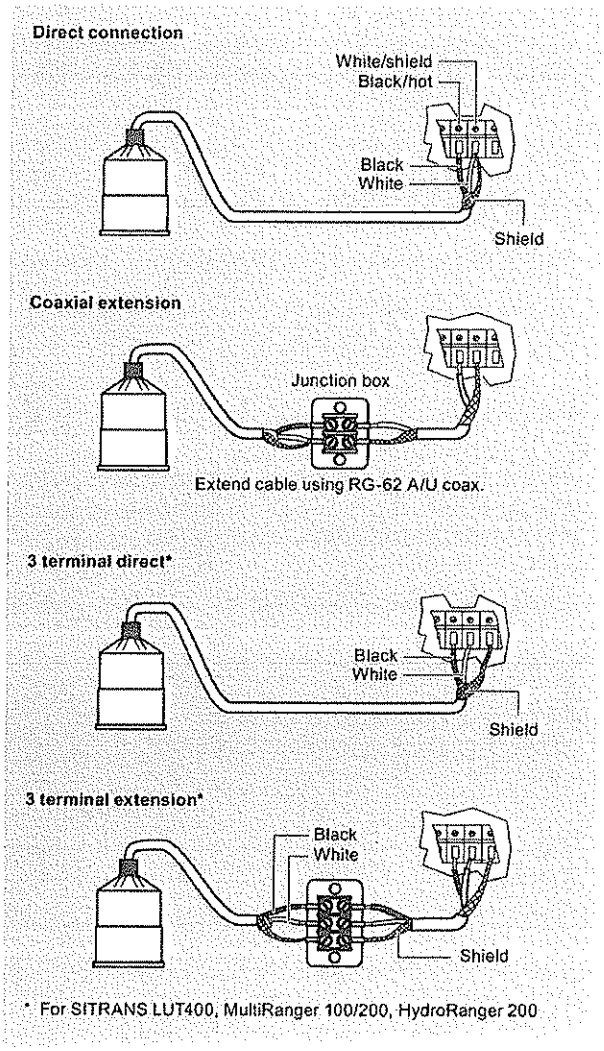

XRS-5 ultrasonic transducer connections

3/12/18

CERTIFICATE OF REGISTRATION

This is to certify that

Siemens Canada Limited

Siemens Milltronics Process Instruments
1954 Technology Drive, P.O. Box 4225, Peterborough, Ontario K9J 7B1 Canada

operates a

Quality Management System

which complies with the requirements of

ISO 9001:2008

for the following scope of registration

Design, build, sell, distribute and service level measurement products, dry solids flow measurement products and process protection products.

Certificate No.:	CERT-0084161	Original Certification Date:	September 8, 1994
File No.:	002284	Current Certification Date:	November 22, 2014
Issue Date:	October 24, 2014	Certificate Expiry Date:	November 21, 2017

Chris Jouppi
President,
QMI-SAI Canada Limited

Samer Chaouk
Head of Policy, Risk and Certification

ISO 9001

Registered by:
SAI Global Certification Services Pty Ltd, 286 Sussex Street, Sydney NSW 2000 Australia with QMI-SAI Canada Limited, 20 Carlson Court, Suite 200, Toronto, Ontario M9W 7K6 Canada (SAI GLOBAL). This registration is subject to the SAI Global Terms and Conditions for Certification. While all due care and skill was exercised in carrying out this assessment, SAI Global accepts responsibility only for proven negligence. This certificate remains the property of SAI Global and must be returned to them upon request.
To verify that this certificate is current, please refer to the SAI Global On-Line Certification Register: www.qmi-saiglobal.com/qmi_companies/

SAI GLOBAL

l
3/12/18

CERTIFICATE

This is to certify that

Siemens AG
Process Industries and Drives,
Process Automation
PD PA

Östliche Rheinbrückenstraße 50
76187 Karlsruhe
Germany

with the organizational units/sites as listed in the annex
has implemented and maintains a **Quality Management System**.

Scope:
Research & development, production, sales and services of products, solutions and systems for
- industrial communication and identification, process instrumentation and analytics, power supplies
- industry automation and engineering

Through an audit, documented in a report, it was verified that the management system fulfills the requirements of the following standard:

ISO 9001 : 2008

Certificate registration no.	000656 QM08
Date of revision	2015-02-23
Valid from	2015-02-23
Valid until	2018-02-21
Date of certification	2015-02-23

DAkkS
Deutsche
Akkreditierungsstelle
D-ZM-16074-01-00

DQS GmbH

G. Blechschmidt

Götz Blechschmidt
Managing Director

Accredited Body: DQS GmbH, August-Schanz-Straße 21, 60433 Frankfurt am Main

3/12/18

Annex to Certificate
Registration No. 000656 QM08

Siemens AG
Process Industries and Drives, Process Automation

PD PA

Östliche Rheinbrückenstraße 50
76187 Karlsruhe
Germany

Locations

378142
Siemens AG
PD PA
Siemensallee 84
76187 Karlsruhe
Germany

398998
Siemens AG
PD PA
Industriepark Höchst, B 598
65926 Frankfurt am Main
Germany

378133
Siemens AG
PD PA
Gleiwitzer Straße 555
90475 Nürnberg
Germany

506457
Siemens AG
PD PA
Schweinfurter Str. 1
97080 Würzburg
Germany

020069
Siemens AG
PD PA
Siemensstraße 2-4
90766 Fürth
Germany

506456
Siemens AG
PD PA
Frauenauracher Str. 85
91056 Erlangen
Germany

072196
Siemens S.A.S.
PD PA MF-H
1, Chemin de la Sandlach
67500 Haguenau
France

519038
Siemens AG
PD PA
Karl-Legien-Str. 190
53123 Bonn
Germany

445233
Siemens Industry Software GmbH & Co. KG
PD PA
Kruppstraße 16
45128 Essen
Germany

This annex (edition: 2015-02-23) is only valid in connection with the above-mentioned certificate.

3/12/18

THE INTERNATIONAL CERTIFICATION NETWORK

CERTIFICATE

IQNet and
DQS GmbH Deutsche Gesellschaft zur Zertifizierung von Managementsystemen

hereby certify that the company

Siemens AG
Process Industries and Drives,
Process Automation
PD PA

Östliche Rheinbrückenstraße 50
76187 Karlsruhe
Germany

with the organizational units/sites as listed in the annex
has implemented and maintains a **Quality Management System**.

Scope:
Research & development, production, sales and services of products, solutions and systems for
- industrial communication and identification, process instrumentation and analytics, power supplies
- industry automation and engineering

Through an audit, documented in a report, it was verified that the management system
fulfills the requirements of the following standard:

ISO 9001 : 2008

Date of revision 2015-02-23
Valid from 2015-02-23
Valid until 2018-02-21
Date of certification 2015-02-23

Registration number: DE-000656 QM08

President of IQNet *Managing Director of DQS GmbH*

IQNet Partners*:
AENOR *Spain* AFNOR Certification *France* AIB-Vincotte International *Belgium* ANCE-SIGE *Mexico* APCER *Portugal* CCC *Cyprus*
CISQ *Italy* CQC *China* CQM *China* CQS *Czech Republic* Cro Cert *Croatia* DQS Holding GmbH *Germany*
FCAV *Brazil* FONDONORMA *Venezuela* ICONTEC *Colombia* IMNC *Mexico* Inspecta Certification *Finland* IRAM *Argentina*
JQA *Japan* KFQ *Korea* MIRTEC *Greece* MSZT *Hungary* Nemko AS *Norway* NSAI *Ireland* PCBC *Poland*
Quality Austria *Austria* RR *Russia* SII *Israel* SIQ *Slovenia* SIRIM QAS International *Malaysia*
SQS *Switzerland* SRAC *Romania* TEST St Petersburg *Russia* TSE *Turkey* YUQS *Serbia*

IQNet is represented in the USA by: AFNOR Certification, CISQ, DQS Holding GmbH and NSAI Inc.

* The list of IQNet partners is valid at the time of issue of this certificate. Updated information is available under www.iqnet-certification.com

3/12/18

THE INTERNATIONAL CERTIFICATION NETWORK

Annex to IQNet Certificate Number: 000656 QM08

Siemens AG
Process Industries and Drives,
Process Automation

PD PA

Östliche Rheinbrückenstraße 50
76187 Karlsruhe
Germany

Locations

378142
Siemens AG
PD PA
Siemensallee 84
76187 Karlsruhe
Germany

398998
Siemens AG
PD PA
Industriepark Höchst, B 598
65926 Frankfurt am Main
Germany

378133
Siemens AG
PD PA
Gleiwitzer Straße 555
90475 Nürnberg
Germany

506457
Siemens AG
PD PA
Schweinfurter Str. 1
97080 Würzburg
Germany

020069
Siemens AG
PD PA
Siemensstraße 2-4
90766 Fürth
Germany

506456
Siemens AG
PD PA
Frauenauracher Str. 85
91056 Erlangen
Germany

072196
Siemens S.A.S.
PD PA MF-H
1, Chemin de la Sandlach
67500 Haguenau
France

519038
Siemens AG
PD PA
Karl-Legien-Str. 190
53123 Bonn
Germany

445233
Siemens Industry Software GmbH & Co. KG
PD PA
Kruppstraße 16
45128 Essen
Germany

3/12/18

BUREAU VERITAS
Certification

Certificate

for

Huba Control Ltd.

5436 Würenlos / Switzerland

Bureau Veritas Certification hereby confirms that the management system of the above-mentioned organisation has been assessed and complies with the requirements set out in the following standards / regulations.

Standards/Regulations:

SN EN ISO 9001 : 2008

The management system comprises:

Design and production of sensors

Date of initial certification: **11.05.1995**

The requirements of the standards/regulations must be complied with throughout the period of validity of this certificate. This will be ensured through regular monitoring by Bureau Veritas Certification.

Date of certification: **04.12.2014** Valid until: **03.12.2017**

Bureau Veritas Certification will provide information on the validity of this certificate on request at any time. Additional information on the management system and the area of applicability should be obtained from the organisation itself.

Certificate number: **CH8484729** Date: **04.12.2014**

SWISS CERTIFICATION

SCESm 003

Pascal Singh

Bureau Veritas Certification (Switzerland) AG,
Grossächerstrasse 25, CH-8104 Weiningen ZH

3/12/18

AS950 PORTABLE SAMPLER

Applications

- Wastewater
- Collection systems
- Industrial pretreatment
- Environmental monitoring
- Stormwater

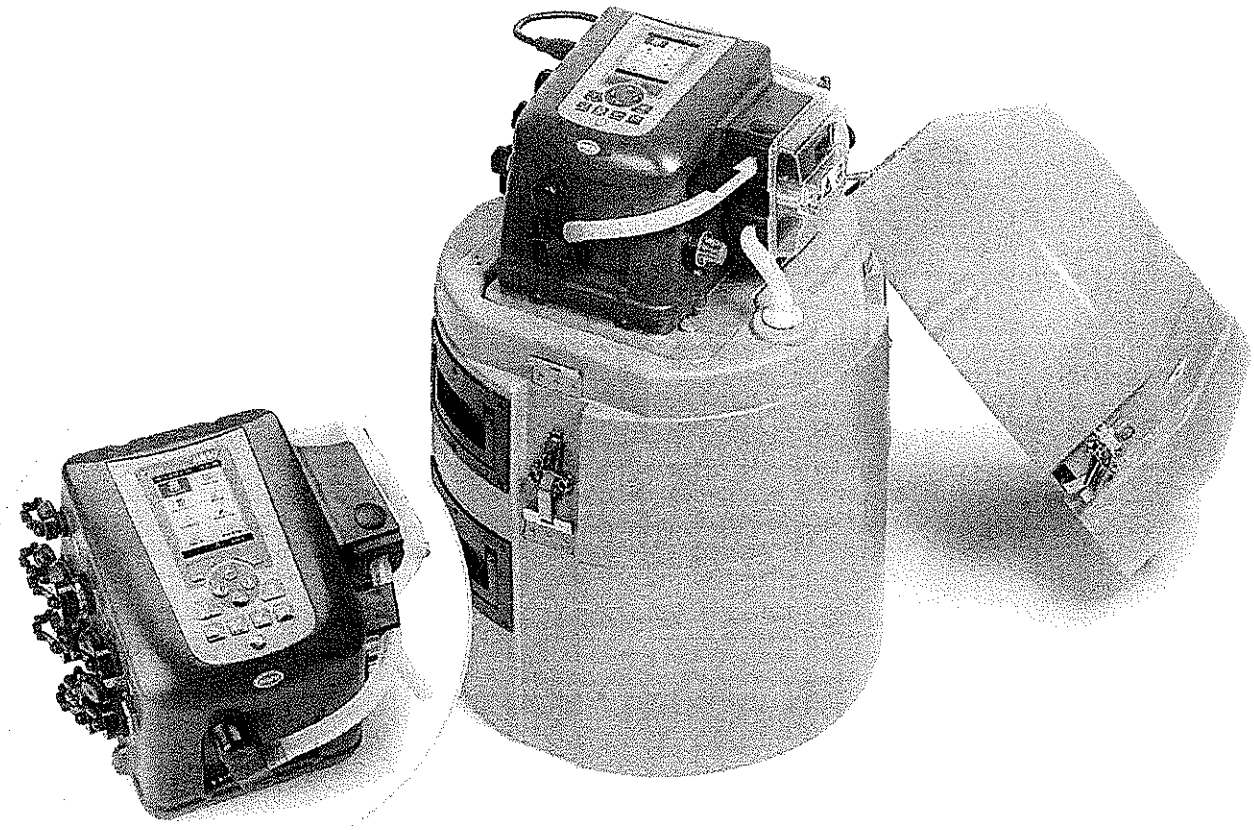

Sampling has never been this easy.

HACH LANGE's AS950 sampler controller makes programming, data transfer and operation more intuitive and error-free.

Easiest and most intuitive operation

The large full colour display and intuitive programming give you access to all your programmable criteria on a single screen - eliminating scrolling through menus and supporting error-free operation.

Most convenient data transfer and programming available

The AS950 is the only sampler that utilises a USB drive to upload and download data and copy programs from one sampler to another.

Confidence in your sampling process

The program status screen instantly communicates alarms, missed samples and program progress for quick and easy troubleshooting.

Field convertible for compact or discrete sampling

Weighing only 12.7 kg, the AS950 portable sampler is designed for accuracy and convenience. Quickly switch between composite and discrete sampling in the field. Configurable for single or multiple bottle applications, it is specifically designed for use in 18-inch manholes.

Easy maintenance at low cost

Spring-mounted rollers provide long tubing life keeping maintenance costs low. The desiccant and pump tubing can easily be accessed; the replacement is possible without any tools. The rugged see-through pump cover is made for a quick visual inspection.

HACH LANGE

3/12/18

Technical Data*

AS950 Portable Sampler

Housing material	Impact resistant ABS plastic, 3-section construction Double-walled base with 2.54 cm insulation, direct ice contact with bottles (Sampler)
Temperature	Operating: 0 - 49 °C Storage: -40 - 60 °C
Power requirements (Voltage)	12 V DC
Dimensions (W x H x D)	Standard Base: 50.5 cm x 69.4 cm Compact Base: 44.1 cm x 61 cm Composite Base: 50.28 cm x 79.75 cm
Weight	Standard: 15 kg with (24) 1 L Polyethylene bottles; 14.8 kg with 10 L Polyethylene bottle Compact Base: 12.2 kg with (24) 575 mL Polyethylene bottles; 12.9 kg with 10 L Polyethylene bottle Composite Base: 15 kg with (1) 21 L Polyethylene bottle

AS950 Controller

Housing material	PC/ABS blend, NEMA 4X, 6, IP68, corrosion and ice resistant (Controller)
Display	1/4 VGA, Colour; self-prompting/ menu-driven program
User interface	Membrane switch keypad with 2 multiple function soft keys
Languages user interface	English, French, Spanish, Italian, German, Portuguese, Chinese
Lock function	Access code protection prevents tampering
Memory	Sample history: 4000 records; Data log: 325,000 records; Event log: 2000 records
Communication capabilities	USB and optional RS485 (MODBUS)
Inputs	One 0/4-20 mA input for flow pacing
Certifications	CE, UL

Sample container

STANDARD BASE CAPACITY:

(24) 1 L Polyethylene or 350 mL Glass bottles

(8) 2.3 L Polyethylene or 1.9 L Glass bottles

(4) 3.8 L Polyethylene or 3.8 L Glass bottles

(2) 3.8 L Polyethylene or 3.8 L Glass bottles

(1) 21 L Polyethylene composite bottle or

(1) 15 L Polyethylene composite bottle or

(1) 20 L Polyethylene composite bottle or

(1) 10 L Polyethylene or 10 L Glass composite bottle

COMPACT BASE CAPACITY:

(24) 575 mL Polyethylene bottles

(8) 950 mL Glass bottles

(1) 10 L Polyethylene or 10 L Glass bottle

COMPOSITE BASE CAPACITY:

(1) 21 L Polyethylene bottle

ICE CAPACITY:

Compact Base: 3.9 kg with (24) 575 mL PE bottles

Standard Base: 14.5 kg with (24) 350 mL Glass bottles

**Subject to change without notice.*

3/12/18

Technical Data*

Sampling Features

Programs

Dual Programs: Up to 2 sample programs can be run sequentially, in parallel, or according to day of week scheduling; enabling a single sampler to function like multiple samplers

Sampling mode

Pacing: Time weighted, Flow weighted, Time table, Flow table, Event

Distribution: Single bottle composite, multi-bottle composite, multi-bottle discrete, bottles per sample, samples per bottle or a combination of bottles per sample and samples per bottle

Operating mode

Continuous or non-continuous

Status messages

Communicates what program is running, if there are any missed samples, when the next sample will be taken, how many samples remain, number of logged channels, time of last measurement, memory available, number of active channels, if alarms were triggered, when alarms were triggered, active sensors and cabinet temperature

Alarm

Configurable alarms that show on status screen and are recorded in diagnostics alarm logs. Alarms can be set for system diagnostics and logging such as program end, sample complete, missed samples and full bottle. Channel alarms are setpoint alarms for the recorded measurements (channels), such as pH, level and power supply voltage.

Manual sampling

Initiates a sample collection independent of program in progress

Automatic shutdown

Multiple Bottle Mode: After complete revolution of distributor arm (unless Continuous Mode is selected)

Composite Mode: After preset number of samples have been delivered to composite container, from 1 to 999 samples, or upon full container.

Sample volume

Programmable in 10 mL increments from 10 to 10,000 mL

Sample interval

Selectable in single increments from 1 to 9999 flow pulses or 1 to 9999 minutes in one minute increments

Sample trigger

When equipped with flow sensor or pH/temperature sensor or peripheral monitoring options, sampling can be triggered upon an upset condition when field selectable limits are exceeded

Data logging

SAMPLE HISTORY - Stores up to 4000 entries for sample time stamp, bottle number and sample status (success, bottle full, rinse error, user abort, distributor error, pump fault, purge fail, sample timeout, power fail and low main battery).

MEASUREMENTS - Stores up to 325,000 entries for selected measurement channels in accordance with the selected logging interval.

EVENTS - Ability to store up to 2000 entries in Sample History logging. Records Power On, Power Fail, Firmware Updated, Pump Fault, Distributor Arm Error, Low Memory Battery, Low Main Battery, User On, User Off, Program Started, Program Resumed, Program Halted, Program Completed, Grab Sample, Tube Change Required, Sensor Communication Errors, Cooling Failed, Heating Failed, Thermal Error Corrected.

Diagnostics

View event and alarm logs as well as maintenance diagnostics

**Subject to change without notice.*

3/12/18

Technical Data*

Sample Pump and Strainer

Sample pump

High-speed peristaltic, dual roller, with 0.95 ID x 1.6 OD cm (3/8" ID x 5/8" OD) pump tube;

Pump body IP37, Polycarbonate cover

Vertical lift

8.5 m using 8.8 m maximum of 3/8" Vinyl intake tube at sea level at 20 to 25 °C

Tubing

Pump tubing: 9.5 mm ID x 15.9 mm OD Silicone

Intake tubing: 1.0 - 4.75 m minimum length, 1/4" or 3/8" ID Vinyl or 3/8" ID Teflon-lined Polyethylene with protective outer cover (black or clear)

Sample volume repeatability

Typical: ±5% of 200 mL sample volume with: 4.6 m vertical lift, 4.9 m of 3/8" Vinyl intake tube, single bottle, full bottle shut-off at room temperature and 1524 m elevation

Sample volume accuracy

Typical: ±5% of 200 mL sample volume with: 4.6 m vertical lift, 4.9 m of 3/8" Vinyl intake tube, single bottle, full bottle shut-off at room temperature and 1524 m elevation

Sample transport velocity

0.9 m/s with 4.6 m vertical lift, 4.9 m of 3/8" Vinyl intake tubing, 21 °C and 1524 m elevation

Pump flow rate

4.8 L/min at 1 m vertical lift with 3/8" intake tube typical

Internal clock

±1 second per day at 25 °C

Intake

Strainers: Choice of Teflon and 316 Stainless Steel construction, or all 316 Stainless Steel in standard size, high velocity, and low profile for shallow depth applications

Purge: Air purged automatically before and after each sample; duration automatically compensates for varying intake line lengths

Rinse: Intake line automatically rinsed with source liquid prior to each sample, from 1 to 3 rinses

Retries or Fault: Sample collection cycle automatically repeated from 1 to 3 times if sample not obtained on initial attempt

*Subject to change without notice.

Dimensions

The AS950 Portable Sampler is designed for indoor or outdoor use. No secondary enclosure is required when operated within the specified temperature range. The sampler consists of three main sections - the top cover, the center control system, and the bottle/base section held together by Stainless Steel latches which serve as the connection point for the optional suspension harness. The lockable top cover protects the controller from extreme weather and unauthorized use.

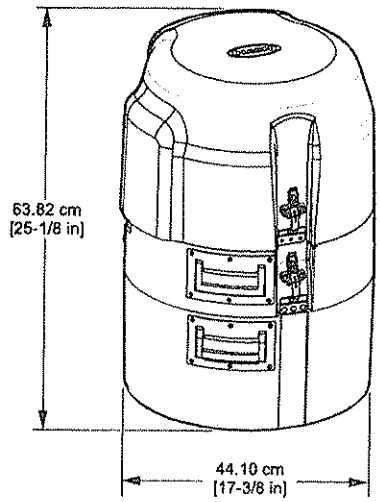

Compact Base

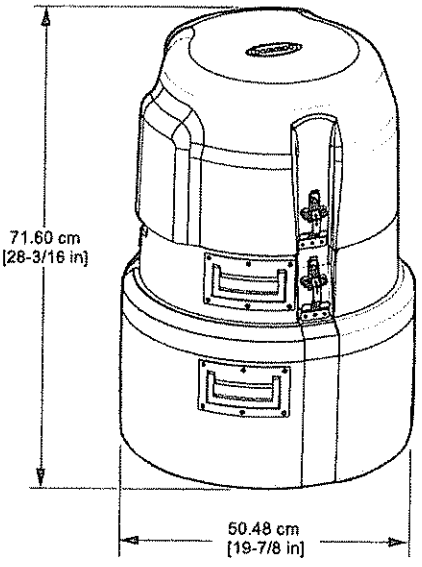

Standard Base

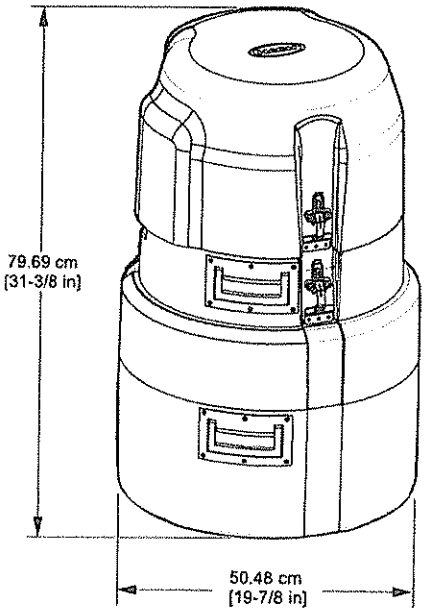

Composite Base

3/12/18

Order Information

ASP.XXXXXXXXXX	AS950 Portable Sampler Portable Sampler with AS950 Controller, available in various configurations and with several factory installed options. Please contact HACH LANGE for more information.

Controller and Base Options

8975	Compact insulated base for AS950 Portable Sampler
8976	Standard insulated base for AS950 Portable Sampler
8561	Composite insulated base for AS950 Portable Sampler

Bottle Options and Accessories

1918	10 L Polyethylene bottle, with cap
6494	20 L Polyethylene bottle, with cap
737	Set of (24) 1 L Polyethylene bottles, with caps
1369	Set of (24) 575 mL Polyethylene bottles, with caps
2348	Set of (8) 950 mL Glass bottles, with Teflon-lined caps
2189	Retainer for (24) 350 mL Glass bottles
1422	Retainer for (8) 1.9 L Glass / (8) 2.3 Polyethylene bottles or (24) 350 mL Glass / (24) 575 mL Polyethylene bottles
2347	Retainer for (8) 950 mL Glass bottles
1502	Container support
8996	Retainer/full container shut-off

Distributors

8582	Distributor with arm for 24 bottle standard base and 12 bottle compact base
8580	Distributor with arm for 24 bottle compact base
8584	Distributor with arm for 2, 4 and 8 bottle standard base and 8 bottle compact base

Tubing and Strainers

920	7 m Vinyl intake tubing, 3/8" ID
922	7 m Teflon-lined Polyethylene tubing, 3/8" ID (requires Connection Kit 2186)
926	Strainer, Teflon/Stainless Steel
2070	Strainer, 316 Stainless Steel
2071	Strainer, for shallow depth applications, 316 Stainless Steel
2186	Connector Kit, for Teflon-lined Polyethylene tubing
4652	Strainer, high velocity and shallow depth
4600-15	Pump tubing, 4.5 m
4600-50	Pump tubing, 15 m
8964	Pump tube insert
9501400	Pump tube insert, non-contact liquid detect

Factory Installed Options

TWO SENSOR PORTS
Accepts HACH LANGE digital Differential pH, HACH LANGE digital AV9000 analyser with submerged area velocity flow and/or HACH LANGE digital US9000 ultrasonic level sensors

RAIN/RS485 PORT
Accepts HACH LANGE Rain Gauge (not included) or can be used as RS485 communications

NON-CONTACT LIQUID DETECT
Sample volume accuracy for applications that require complete tubing replacement

Please contact your local HACH LANGE representative for details.

Inputs/Outputs

9494500	IO9001 Module (connects through auxiliary port), includes 1 relay (high voltage)
9494600	IO9004 Module (connects through auxiliary port), includes multiple 0/4-20 mA outputs and inputs

Accessories

1355	Suspension harness (suspends the sampler)
9542	Manhole support bracket/spanner, 18 to 28 inches
9557	Manhole support bracket/spanner, 28 to 48 inches
5713000	Manhole support bracket, 18 to 27 inches
6987	Weatherguard fiberglass enclosure, 89 cm x 89 cm x 86 cm
6992	Weatherguard fiberglass enclosure, 91 cm x 66 cm x 135 cm
8713200	Solar Module, with 10 W panel and 12 VDC regulator
8754400	12 V Lead Acid battery with 3 pin connector
8753500EU	EU Charger, Lead Acid, 3 pin, 230 V
8754500EU	Power supply, 3 pin connector, 230 V, EU plug
9504700EU	USB cable, A to A (EU)

DOC053.52.35023.Jan15

3/12/18

Certificate

Standard	**ISO 9001:2008**
Certificate Registr. No	01 100 4412

Certificate Holder

HACH LANGE GmbH
Königsweg 10 • D - 14163 Berlin

including the locations:

HACH LANGE GmbH
Willstätterstraße 10 • D - 40549 Düsseldorf

Scope:

development, manufacture, sales and service
of measuring systems for water analysis
inclusively retraction of used reagents and
their environmentally responsible disposal

Proof has been furnished by means of an audit that the requirements of ISO 9001:2008 are met.

Validity

The certificate is valid from 2016-02-22 until 2018-09-14
First certification 1995

2016-02-18

TÜV Rheinland Cert GmbH
Am Grauen Stein · 51105 Köln

www.tuv.com

DAkkS

TÜVRheinland

3/12/18

2. SEPTAGE UNIT

3/12/18

© Siemens AG 2015

Overview

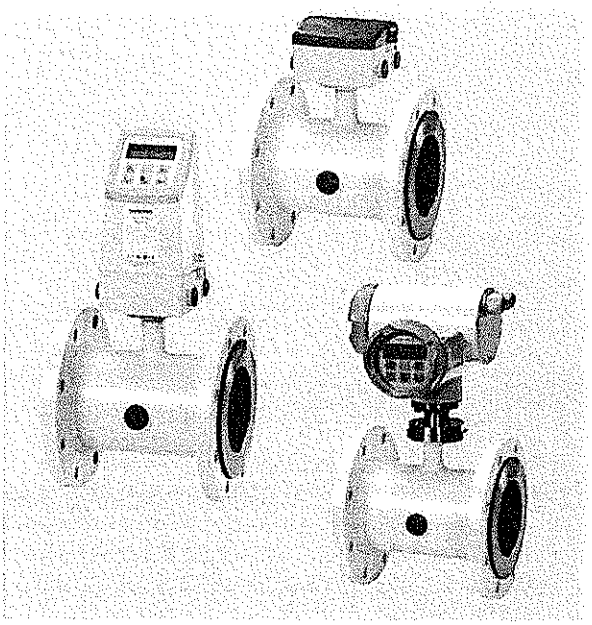

The SITRANS F M MAG 5100 W is an electromagnetic flow sensor designed to meet ground water, drinking water, waste water, sewage or sludge applications.

Benefits

- DN 15 to DN 1200 / 2000 (½" to 48"/78")
- Stock program of MAG 5100 W secures short delivery time
- Connection flanges EN 1092-1 (DIN 2501), ANSI, AWWA, AS and JIS.
- NBR Hard Rubber and Ebonite Hard Rubber liner for all water applications
- EPDM liner with drinking water approvals
- Hastelloy integrated grounding and measuring electrodes
- Increased low flow accuracy for water leak detection, due to coned liner design (Article No. 7ME6520, DN 15 to 300 mm (½" to 12")).
- Drinking water approvals
- Suitable for direct burial and constant flooding
- Custody transfer approvals
- Build-in length according to ISO 13359; the standard includes sizes up to DN 400.
- Easy commissioning, SENSORPROM unit automatically uploads calibration values and settings.
- Designed so patented in-situ verification can be conducted. Using SENSORPROM fingerprint.
- Custody Transfer option for water billing, with type approval after OIML R 49 and verified according to MI-001 - 0D inlet/ 0D outlet installation
  - pattern approval OIML R 49 (Denmark, Germany)
  - conforms to ISO 4064 and EN 14154 for mechanical flowmeters
  - PTB K7.2
- FM Fire Service Meter (Class Number 1044) for automatic fire protection systems
- Meets EEC directives: PED, 97/23/EC pressure directive for EN1092-1 flanges
- Simple onsite or factory upgrade to IP68/NEMA 6P of a standard sensor
- MCERTS approval for UK environmental market

Application

The main applications of the SITRANS F M electromagnetic flow sensors can be found in the following fields:

- Water abstraction
- Water treatment
- Water distribution network (leak detection management)
- Custody transfer water meters
- Irrigation
- Waste water treatment
- Filtration plant (e.g. reverse osmosis and ultra filtration)
- Industrial water applications

Mode of operation

The flow measuring principle is based on Faradays law of electromagnetic induction according to which the sensor converts the flow into an electrical voltage proportional to the velocity of the flow.

Integration

The complete flowmeter consists of a flow sensor and an associated transmitter SITRANS F M MAG 5000, MAG 6000 or MAG 6000 I.

The flexible communication concept USM II simplifies integration and update to a variety of fieldbus systems, e.g. HART, DeviceNet, PROFIBUS DP and PA, FOUNDATION Fieldbus H1 or Modbus RTU/RS 485.

Q 3/12/18

© Siemens AG 2015

Technical specifications

Product characteristic	MAG 5100 W (7ME6520) Mainly for the European market EPDM or NBR lining	MAG 5100 W (7ME6580) Mainly for the non-European market Ebonite lining
Design and nominal size	Coned sensor (octagon liner): DN 15 ... 40 (½" .. 1½") Coned sensor: DN 50 ... 300 (2" ... 12") Full bore sensor: DN 350 ... 1200 (14" ... 48")	Full bore sensor: DN 25 ... 2000 (1" ... 78")
Measuring principle	Electromagnetic induction	Electromagnetic induction
Excitation frequency (Mains supply: 50/60 Hz)	DN 15 ... 65 (½" ... 2½"): 12.5 Hz/15 Hz DN 80 ... 150 (3" ... 6"): 6.25 Hz/7.5 Hz DN 200 ... 300 (8" .. 12"): 3.125 Hz/3.75 Hz DN 350 ... 1200 (14" ... 48"): 1.5625 Hz/1.875 Hz	DN 25 ... 65 (1" ... 2½"): 12.5 Hz/15 Hz DN 80 ... 150 (3" ... 6"): 6.25 Hz/7.5 Hz DN 200 ... 1200 (8" ... 48"): 3.125 Hz/3.75 Hz DN 1400 ... 2000 (54" ... 78"): 1.5625 Hz/1.875 Hz
Process connection		
Flanges[1]		
• EN 1092-1	PN 10 (145 psi) : DN 200 ... 300 (8" ... 12") Flat face PN 10 (145 psi): DN 350 ... 1200 (14" .. 48") Raised face[2] PN 16 (232 psi): DN 50 ... 300 (2" ... 12") Flat face[3] PN 16 (232 psi): DN 350 ... 1200 (14" ... 48") Raised face PN 40 (580 psi): DN 15 ... 40 (½" ... 1½") Flat face	Raised face[3] (EN 1092-1, DIN 2501 and BS 4504 have the same mating dimensions) PN 6 (87 psi): DN 1400 ... 2000 (54" ... 78") PN 10 (145 psi): DN 200 ... 2000 (8" ... 78") PN 16 (232 psi): DN 65 ... 600 (2½" ... 24") PN 40 (580 psi): DN 25 ... 50 (1" ... 2")
• ANSI B16.5	Class 150: ½" ... 12" flat face, 14" ... 24" raised face	Class 150: 1" ... 24"; raised face
• AWWA C-207	Class D: 28" ... 48", flat face	Class D: 28" ... 78", flat face
• AS4087	PN 16 (DN 50 ... 1200), (2" ... 48") 16 bar (232 psi)	PN 16 (DN 50 ... 1200), (2" ... 48") 16 bar (232 psi)
• JIS B 2220:2004	-	K10 (1" ... 24")
Rated Operation conditions		
Ambient temperature		
• Sensor	-40 ... +70 °C (-40 ... +158 °F)	-20 ... +70 °C (-4 ... +158 °F)
• With compact transmitter MAG 5000/6000[4]	-20 ... +60 °C (-4 ... +140 °F)	-20 ... +60 °C (-4 ... +140 °F)
Operating pressure (Abs) [abs. bar] (Maximum operating pressure depending on flange standard, decreases with increasing operating temperature)	DN 15 ... 40 (½" ... 1½"): 0.01 ... 40 bar (0.15 ... 580 psi) DN 50 ... 300 (2" ... 12"): 0.03 ... 20 bar (0.44 ... 290 psi) DN 350 ... 1200 (14" ... 48"): 0.01 ... 16 bar (0.15 ... 232 psi)	DN 25 ... 50 (1" ... 2"): 0.01 ... 40 bar (0.15 ... 580 psi) DN 65 ... 1200 (2½" ... 48"): 0.01 ... 16 bar (0.15 ... 232 psi) DN 1400 ... 2000 (54" ... 78"): 0.01 ... 10 bar (0.15 ... 145 psi)
Enclosure rating		
• Standard	IP67 to EN 60529/NEMA 4X/6 (1 mH_2O for 30 min)	IP67 to EN 60529/NEMA 4X/6 (1 mH_2O for 30 min)
• Option	IP68 to EN 60529/NEMA 6P (10 mH_2O continuously)	IP68 to EN 60529/NEMA 6P (10 mH_2O continuously)
Pressure drop	DN 15 and 25 (½" and 1"): Max. 20 mbar (0.29 psi) at 1 m/s (3 ft/s). DN 40 ... 300 (1½" ... 12"): Max 25 mbar (0.36 psi) at 3 m/s (10 ft/s) DN 350 ... 1200 (14" ... 48"): Insignificant	Insignificant
Test pressure	1.5 x PN (where applicable) FM Fire Service: 2 x PN	1.5 x PN (where applicable)
Mechanical load (vibration)	18 ... 1000 Hz random in x, y, z, directions for 2 hours according to EN 60068-2-36 Sensor: 3.17 g RMS Sensor with compact MAG 5000/6000 mounted transmitter: 3.17 g RMS Sensor with compact MAG 6000 I mounted transmitter: 1.14 g RMS	18 ... 1000 Hz random in x, y, z, directions for 2 hours according to EN 60068-2-36 Sensor: 3.17 g RMS Sensor with compact MAG 5000/6000 mounted transmitter: 3.17 g RMS Sensor with compact MAG 6000 I mounted transmitter: 1.14 g RMS

3/12/18

© Siemens AG 2015

Product characteristic	Mainly for the European market (7ME6520)	Mainly for the non-European market (7ME6580)
	EPDM or NBR lining	**Ebonite lining**
Medium conditions		
Temperature of medium		
• NBR	-10 ... +70 °C (14 ... 158 °F)	-
• EPDM	-10 ... +70 °C (14 ... 158 °F)	-
• EPDM/NBR (MI-001)	0.1 ... 30 °C (32 ... 76 °F)	-
• Ebonite	-	-10 ... +70 °C (14 ... 158 °F)
EMC	2004/108/EC	2004/108/EC
Design		
Material		
• Housing and flanges	Carbon steel ASTM A 105, with corrosion-resistant two-component epoxy coating (150 µm/300 µm) Corrosivity category C4, according to ISO 12944-2	Carbon steel ASTM A 105, with corrosion-resistant two-component epoxy coating (150 µm/300 µm) Corrosivity category C4, according to ISO 12944-2
• Measuring pipe	Stainless steel AISI 304/1.4301	Stainless steel AISI 304/1.4301
• Electrode	Hastelloy C	Hastelloy C
• Grounding electrode	Hastelloy C	Hastelloy C
• Terminal box	Fibre glass reinforced polyamide	Fibre glass reinforced polyamide
Certificates and approvals		
Calibration		
• Standard production calibration (default), calibration report shipped with sensor	Zero-point, 2 x 25 % and 2 x 90 %	Zero-point, 2 x 25 % and 2 x 90 %
• Special calibration	5-point calibration: 20 %, 40 %, 60 %, 80 %, 100 % of factory Q_{max} 10-point calibration: ascending and descending at 20 %, 40 %, 60 %, 80 %, 100 % of factory Q_{max} Matched-pair calibration: default, 5-point or 10-point	5-point calibration: 20 %, 40 %, 60 %, 80 %, 100 % of factory Q_{max} 10-point calibration: ascending and descending at 20 %, 40 %, 60 %, 80 %, 100 % of factory Q_{max} Matched-pair calibration: default, 5-point or 10-point
Material certificate EN 10204 3.1	Available when ordering together with meter[5]	Available when ordering together with meter[5]
Pressure test certificate	Available when ordering together with meter[5]	Available when ordering together with meter[5]
Custody Transfer (only together with MAG 6000 CT)	OIML R 49 pattern approval cold water (Denmark and Germany): DN 50 ... 300 (2" ... 12") MI-001 cold water (EU): DN 50 ... 300 (2" ... 12") PTB K7.2: Chilled water energy metering DN 50-300 (order as special) Certificate number: 22 76.10 02	
Drinking water approvals	EPDM liner: NSF/ANSI Standard 61[6] (Cold water, US) WRAS (WRc, BS6920 cold water, GB) ACS (F), DVGW W270 (D) Belgaqua (B)	NSF/ANSI Standard 61[6] (Cold water, US) WRAS (WRc, BS6920 cold water, GB)
Other approvals	MCERTS PED conforming: All EN1092-1 flanges and ANSI Class 150 (< DN 300 (<12")) - 97/23/EC[7] CRN (DN 50 - DN 1200 (2" ... 48")) CSA Class I, Div 2[8] FM Class I, Div 2[8] FM Fire Service Approval according to class 1044[8][9] VdS: Extinguishing systems DN 50 ... 300	PED conforming: All EN1092-1 flanges (≤ DN 600 (≤ 24") - 97/23/EC[7] CRN CSA Class I, Div 2[8] FM Class I, Div 2[8]

1) DN 750, DN 1050 and DN 1100 (30", 42" and 44") not available with EN 1092-1 (PN 10 and PN 16) and AS4087 flanges
2) Type 01 (SORF)
3) DN ≤ 600 type 01 (SORF); DN > 600 type 11
4) With compact transmitter MAG 5000 CT/6000 CT -20 ... +50 °C (-4 ... +122 °F); with compact MI-001 approved transmitter -25 ... +55 °C (-13 ... +131 °F)
5) Has to be ordered with the meter. It is not possible to order the certificate afterwards.
6) Including Annex G
7) For sizes larger than 600 mm (24") in PN 16 PED conformity is available as a cost-added option. The basic unit will carry the LVD (Low Voltage Directive) and EMC approval. All products sold outside of EU and EFTA are excluded from the directive, also products sold into certain market sectors are excluded. These include:
a) Meters used in networks for the supply, distribution and discharge of water.
b) Meters used in pipelines for the conveyance of any fluid from offshore to onshore.
c) Meters used in the extraction of petroleum or gas, including Christmas tree and manifold equipment.
d) Any meter mounted on a ship or mobile offshore platform. For further information on the PED standard and requirements see page 9/6
8) Not for sensors with 300 µm coating
9) DN 50, DN 80, DN 100, DN 150, DN 200, DN 250, and DN 300 (2", 3", 4", 6", 8", 10", and 12") with ANSI B16.5 Class 150 flanges

3/12/18

© Siemens AG 2015

MAG 5100 W (7ME6520) with MAG 6000 CT (Revenue program) MI-001

MAG 5100 W CT program is type approved according to international water meter standard OIML R 49. Since the first November 2006 the MI-001 water meter directive is in force, which means that all water meters can be sold across the EU borders if the water meters contain a MI-001 label.

The MAG 5100 W MI-001 verified and labeled products are a Class II approval according to Directive 2004/22/EC of the European Parliament and Council of March 31, 2004 on measuring instruments (MID), Annex MI-001 in the sizes from DN 50 to DN 300 (Article No. 7ME6520).

The MID certification is obtained as a modul B + D module approval according to the above mentioned directive.

Module B : Type approval according to OIML R 49

Module D : Quality insurance approval of production

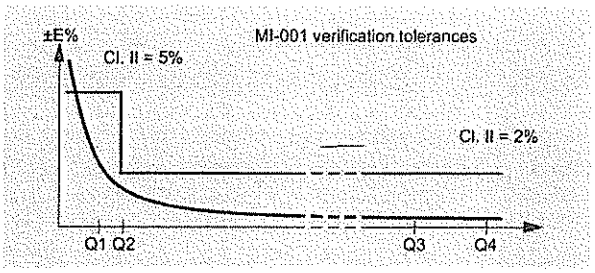

MAG 5100 W (7ME6520) with MAG 5000/MAG 6000 or MAG 6000 CT for Fire Service applications

MAG 5100 W (7ME6520) is FM Fire Service approved for automatic fire protection systems. The approval is applicable for the sizes DN 50, DN 80, DN 100, DN 150, DN 200, DN 250 and DN 300 (2", 3", 4", 6", 8", 10" and 12") with ANSI B16.5 Class 150 flanges. The FM Fire Service approved product can be ordered via the Z-options P20, P21 and P22.

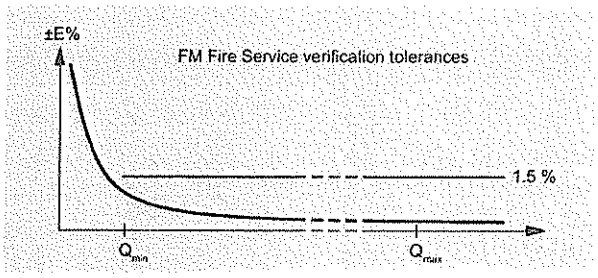

3/12/18

© Siemens AG 2015

MAG 5100 W (7ME6520) MI-001 verified and labeled products at a given Q3 and Q3/Q4 = 1.25 and Q2/Q1 = 1.6 measuring ranges see table below:

Order code: P11	**DN 50 (2")**	**DN 65 (2½")**	**DN 80 (3")**	**DN 100 (4")**	**DN 125 (5")**	**DN 150 (6")**	**DN 200 (8")**	**DN 250 (10")**	**DN 300 (12")**
„R" Q3/Q1	25	25	25	25	25	25	25	25	25
Q4 [m^3/h]	20	31.25	50	78.75	125	200	312.5	500	787.5
Q3 [m^3/h]	**16**	**25**	**40**	**63**	**100**	**160**	**250**	**400**	**630**
Q2 [m^3/h]	1.02	1.6	2.6	4.03	6.4	10.24	16	25.6	40.32
Q1 [m^3/h]	0.64	1.00	1.60	2.52	4.0	6.4	10.0	16.0	25.2

Order code: P12	**DN 50 (2")**	**DN 65 (2½")**	**DN 80 (3")**	**DN 100 (4")**	**DN 125 (5")**	**DN 150 (6")**	**DN 200 (8")**	**DN 250 (10")**	**DN 300 (12")**
„R" Q3/Q1	63	63	63	63	63	63	63	63	63
Q4 [m^3/h]	20	31.25	50	78.75	125	200	312.5	500	787.5
Q3 [m^3/h]	**16**	**25**	**40**	**63**	**100**	**160**	**250**	**400**	**630**
Q2 [m^3/h]	0.41	0.63	1.02	1.6	2.54	4.06	6.35	10.2	16.0
Q1 [m^3/h]	0.25	0.40	0.63	1.00	1.59	2.54	3.97	6.35	10.0

Order code: P13	**DN 50 (2")**	**DN 65 (2½")**	**DN 80 (3")**	**DN 100 (4")**	**DN 125 (5")**	**DN 150 (6")**	**DN 200 (8")**	**DN 250 (10")**	**DN 300 (12")**
„R" Q3/Q1	80	80	80	80	80	80	80	80	80
Q4 [m^3/h]	20	31.25	50	78.75	125	200	312.5	500	787.5
Q3 [m^3/h]	**16**	**25**	**40**	**63**	**100**	**160**	**250**	**400**	**630**
Q2 [m^3/h]	0.32	0.50	0.80	1.20	2.00	3.20	5.0	8.0	12.6
Q1 [m^3/h]	0.20	0.31	0.50	0.75	1.25	2.00	3.13	5.0	7.90

Order code: P16	**DN 50 (2")**	**DN 65 (2½")**	**DN 80 (3")**	**DN 100 (4")**	**DN 125 (5")**	**DN 150 (6")**	**DN 200 (8")**	**DN 250 (10")**	**DN 300 (12")**
„R" Q3/Q1	160	160	160	160	160	160	160	160	160
Q4 [m^3/h]	50	78.75	125	200	312.5	500	787.5	1250	2000
Q3 [m^3/h]	**40**	**63**	**100**	**160**	**250**	**400**	**630**	**1000**	**1600**
Q2 [m^3/h]	0.40	0.63	1.00	1.60	2.50	4.00	6.3	10.0	16.0
Q1 [m^3/h]	0.25	0.39	0.63	1.00	1.56	2.50	3.94	6.3	10.0

Order code: P17	**DN 50 (2")**	**DN 65 (2½")**	**DN 80 (3")**	**DN 100 (4")**	**DN 125 (5")**	**DN 150 (6")**	**DN 200 (8")**	**DN 250 (10")**	**DN 300 (12")**
„R" Q3/Q1	200	200	200	200	200	200	200	200	200
Q4 [m^3/h]	50	78.75	125	200	312.5	500	787.5	1250	2000
Q3 [m^3/h]	**40**	**63**	**100**	**160**	**250**	**400**	**630**	**1000**	**1600**
Q2 [m^3/h]	0.32	0.50	0.80	1.28	2.00	3.20	5.0	8.0	12.8
Q1 [m^3/h]	0.20	0.32	0.50	0.80	1.25	2.00	3.15	5.0	8.0

Order code: P18	**DN 50 (2")**	**DN 65 (2½")**	**DN 80 (3")**	**DN 100 (4")**	**DN 125 (5")**	**DN 150 (6")**	**DN 200 (8")**	**DN 250 (10")**	**DN 300 (12")**
„R" Q3/Q1	250	250	250	250	250	250	250	250	250
Q4 [m^3/h]	50	78.75	125	200	312.5	500	787.5	1250	2000
Q3 [m^3/h]	**40**	**63**	**100**	**160**	**250**	**400**	**630**	**1000**	**1600**
Q2 [m^3/h]	0.26	0.40	0.64	1.02	1.60	2.56	4.0	6.4	10.24
Q1 [m^3/h]	0.16	0.25	0.40	0.64	1.00	1.60	2.52	4.0	6.4

The Label is placed on the side of the encapsulation. An example of the product label is shown below:

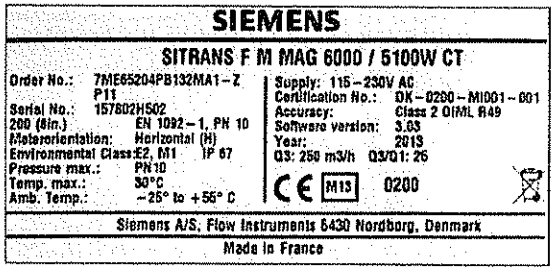

OIML R 49/MI-001 approvals valid for:

- DN 50 to 300 mm (2" to 12")
- Horizontal installation
- Compact or remote with max. 3 m cable
- Power supply 115/230 V AC

Other restrictions may apply (see certificate).

Special OIML / MI-001 settings:

- Unit: m^3
- Qmax: Q3
- Digital output: Frequency

For other factory settings, see Operating Instructions.

2/12/18

© Siemens AG 2015

Selection and Ordering data		Article No.
Sensor SITRANS F M MAG 5100 W	↗	**7ME6520 -**
Hastelloy electrodes, carbon steel flanges, EU water markets and low flow applications		- 2
↗ Click on the Article No. for the online configuration in the PIA Life Cycle Portal.		
Diameter		
DN 15 (½")	☆	1V
DN 25 (1")	☆	2D
DN 40 (1½")	☆	2R
DN 50 (2")	☆	2Y
DN 65 (2½")	☆	3F
DN 80 (3")	☆	3M
DN 100 (4")	☆	3T
DN 125 (5")	☆	4B
DN 150 (6")	☆	4H
DN 200 (8")	☆	4P
DN 250 (10")	☆	4V
DN 300 (12")	☆	5D
DN 350 (14")		5K
DN 400 (16")		5R
DN 450 (18")		5Y
DN 500 (20")		6F
DN 600 (24")		6P
DN 700 (28")		6Y
DN 750 (30")		7D
DN 800 (32")		7H
DN 900 (36")		7M
DN 1000 (40")		7R
(42")		7U
(44")		7V
DN 1200 (48")		8B
Flange norm and pressure rating		
to EN 1092-1		
PN 10 (DN 200 ... 1200/8" ... 48")	☆	B
PN 16 (DN 50 ... 1200/2" ... 48")	☆	C
PN 16, non PED (DN 700 ... 1200/28" ... 48")		D
PN 40 (DN 15 ... 40/½" ... 1½")	☆	F
to ANSI B16.5		
class 150 (½" ... 24")	☆	J
to AWWA C-207		
Class D (28" ... 48")		L
to AS 4087		
PN 16 (DN 50 ... 1200/2" ... 48")		N
Flange material and coating		
Carbon steel flanges ASTM A 105, 150 µm coating	☆	1
Carbon steel flanges ASTM A 105, 300 µm coating		4
Liner material		
EPDM	☆	2
NBR Hard Rubber	☆	3
Transmitter		
Sensor for remote transmitter (Order transmitter separately)	☆	A
MAG 6000 I, Aluminum, 18 ... 90 V DC, 115 ... 230 V AC	☆	C
MAG 6000, Polyamid, 11 ... 30 V DC/11 ... 24 V AC	☆	H
MAG 6000, Polyamid, 115 ... 230 V AC	☆	J
MAG 5000, Polyamid, 11 ... 30 V DC/11 ... 24 V AC	☆	K
MAG 5000, Polyamid, 115 ... 230 V AC	☆	L
MAG 6000 CT, Polyamid, 115 ... 230 V AC		M

Selection and Ordering data		Article No.
Sensor SITRANS F M MAG 5100 W		**7ME6520 -**
Hastelloy electrodes, carbon steel flanges, EU water markets and low flow applications		- 2
Communication		
None	☆	A
HART	☆	B
PROFIBUS PA Profile 3 (only MAG 6000/MAG 6000 I)	☆	F
PROFIBUS DP Profile 3 (only MAG 6000/MAG 6000 I)	☆	G
Modbus RTU/RS 485 (only MAG 6000/MAG 6000 I)	☆	E
FOUNDATION Fieldbus H1 (only MAG 6000/ MAG 6000 I)	☆	J
Cable glands/terminal box		
Metric/Polyamid terminal box or 6000 I compact	☆	1
½" NPT/Polyamid terminal box or 6000 I compact	☆	2

☆ We can offer shorter delivery times for configurations designated with the Quick Ship Symbol ☆. For details see page 9/5 in the appendix.

3/12/18

© Siemens AG 2015

Selection and Ordering data	Order code
Additional information	
Please add "**-Z**" to Article No. and specify Order code(s) and plain text.	
Pressure test certificate according to EN 10204-3.1	**C01**
Material certificate according to EN 10204-3.1	**C12**
Factory certificate according to EN 10204-2.2	**C14**
Factory certificate according to EN 10204-2.1	**C15**
FP2E marking (only France)	**C17**
Special calibration	
• 5-point calibration for DN 15 ... DN 200[1)]	**D01**
• 5-point calibration for DN 250 ... DN 600[1)]	**D02**
• 5-point calibration for DN 700 ... DN 1200[1)]	**D03**
• 10-point calibration for DN 15 ... DN 200[2)]	**D06**
• 10-point calibration for DN 250 ... DN 600[2)]	**D07**
• 10-point calibration for DN 700 ... DN 1200[2)]	**D08**
• Default (2 x 25 % and 2 x 90 %) match-pair calibration for DN 15 ... DN 200	**D11**
• Default (2 x 25 % and 2 x 90 %) match-pair calibration for DN 250 ... DN 600	**D12**
• Default (2 x 25 % and 2 x 90 %) match-pair calibration for DN 700 ... DN 1200	**D13**
• 5-point, matched-pair calibration for DN 15 ... DN 200[1)]	**D15**
• 5-point, matched-pair calibration for DN 250 ... DN 600[1)]	**D16**
• 5-point, matched-pair calibration for DN 700 ... DN 1200[1)]	**D17**
• 10-point, matched-pair calibration for DN 15 ... DN 200[2)]	**D18**
• 10-point, matched-pair calibration for DN 250 ... DN 600[2)]	**D19**
• 10-point, matched-pair calibration for DN 700 ... DN 1200[2)]	**D20**
With pre-mounted terminal blocks for remote systems	**N02**
Approval/Verification[3)] (MI-001 : DN 50 ... 300 (compact only), EN 1092-1 PN10 and PN16 flanges with MAG 6000 CT)[4)]	
• Without verification according to OIML R 49	**P10**
• MI-001 Q3/Q1 = 25	**P11**
• MI-001 Q3/Q1 = 63	**P12**
• MI-001 Q3/Q1 = 80	**P13**
• MI-001 Q3/Q1 = 160	**P16**
• MI-001 Q3/Q1 = 200	**P17**
• MI-001 Q3/Q1 = 250	**P18**
FM Fire Service Approval (with ANSI B16.5 Class 150 flanges)	
• DN 50, DN 80 and DN 100 (2", 3" and 4")	**P20**
• DN 150 and DN 200 (6" and 8")	**P21**
• DN 250 and DN 300 (10" and 12")	**P22**
Tag name plate, stainless steel fixed with SS wire (add plain text)	**Y17**
Tag name plate, plastic (self-adhesive)	**Y18**
Customer-specific converter setup	**Y20**
Sensor cables wired (specify cable Article No.)	**Y40**
Sensor for remote transmitter's junction box potted to IP68 with wired cable (specify cable Article No.)	**Y41**
Other postproduction requirements (add desired text)	**Y99**

Selection and Ordering data	Order code
Additional Calibrations	
Accredited Siemens Flow Instruments matched pair Calibration acc. to ISO/IEC 17025:2005	**On request[5)]**
Customer-witnessed calibration Any of above calibration	**On request[5)]**

[1)] 20 %, 40 %, 60 %, 80 %, 100 % of factory Q_{max}

[2)] Ascending and descending at 20 %, 40 %, 60 %, 80 %, 100 % of factory Q_{max}

[3)] For more details and references of the ranges please see the tables on page 3/96.

[4)] For remote version submit Product Variation Request.

[5)] Ordering On request as dedicated information from the customer on the individual sensors is required.

Operating instructions for SITRANS F M MAG 5100 W

Description	Article No.
• English	**A5E03063678**
• German	**A5E03376527**
• Spanish	**A5E00376529**
• French	**A5E03376521**
• Chinese	**A5E03376501**

This device is shipped with a Quick Start guide and a CD containing further SITRANS F literature.

All literature is also available for free at:
http://www.siemens.com/flowdocumentation

Accessories

Description	Article No.
Potting kit for terminal box of flow sensors for IP68/NEMA 6P	⊛ **FDK:085U0220**

⊛ We can offer shorter delivery times for configurations designated with the Quick Ship Symbol ⊛. For details see page 9/5 in the appendix.

MAG 5000/6000 transmitters and sensors are packed in separate boxes, the final assembly takes place during installation at the customer's place. MAG 6000 I transmitters and sensors are delivered compact mounted from factory.
Communication module will be pre-mounted in the transmitter.

Please use online Product selector to get latest updates.

Product selector link:
www.pia-portal-automation.siemens.com

3/12/18

© Siemens AG 2015

Selection and Ordering data	Article No.
Sensor SITRANS F M MAG 5100 W	↗ 7ME6580-
Hastelloy electrodes, carbon steel flanges, Non EU water markets	-
↗ Click on the Article No. for the online configuration in the PIA Life Cycle Portal.	
Diameter	
DN 25 (1")	✧ 2D
DN 40 (1½")	✧ 2R
DN 50 (2")	✧ 2Y
DN 65 (2½")	✧ 3F
DN 80 (3")	✧ 3M
DN 100 (4")	✧ 3T
DN 125 (5")	✧ 4B
DN 150 (6")	✧ 4H
DN 200 (8")	✧ 4P
DN 250 (10")	✧ 4V
DN 300 (12")	✧ 5D
DN 350 (14")	5K
DN 400 (16")	5R
DN 450 (18")	5Y
DN 500 (20")	6F
DN 600 (24")	6P
DN 700 (28")	6Y
DN 750 (30")	7D
DN 800 (32")	7H
DN 900 (36")	7M
DN 1000 (40")	7R
(42")	7U
(44")	7V
DN 1200 (48")	8B
DN 1400 (54")	8F
DN 1500 (60")	8K
DN 1600 (66")	8P
DN 1800 (72")	8T
DN 2000 (78")	8Y
Flange norm and pressure rating	
to EN 1092-1	
PN 6 (DN 1400 ... 2000 (54" ... 78"))[1]	A
PN 10 (DN 200 ... 2000 (8" ... 78"))[1]	✧ B
PN 16 (DN 65 ... 600 (2½" ... 24"))	✧ C
PN 16, non-PED (DN 700 ... 2000 (28" ... 78"))	D
PN 40 (DN 25 ... 50 (1" ... 2"))	✧ F
to ANSI B16.5	
class 150 (1" ... 24")	✧ J
to AWWA C-207	
Class D (28" ... 78")[1]	L
to AS 4087	
PN 16 (DN 50 ... 1200 (2" ... 48"))	N
to JIS	
B 2220:2004 K10 (1" ... 24")	R
Flange material and coating	
Carbon steel flanges ASTM A 105, 150 µm coating	✧ 1
Carbon steel flanges ASTM A 105, 300 µm coating	4
Liner material	
Ebonite Hard Rubber	✧ 4
Electrode material	
Hastelloy	2

Selection and Ordering data	Article No.
Sensor SITRANS F M MAG 5100 W	7ME6580-
Hastelloy electrodes, carbon steel flanges, Non EU water markets	-
Transmitter with display	
Sensor for remote transmitter (Order transmitter separately)	✧ A
MAG 6000, Polyamid, 11 ... 30 V DC/11 ... 24V AC	✧ H
MAG 6000, Polyamid, 115 ... 230 V AC	✧ J
MAG 5000, Polyamid, 11 ... 30 V DC/11 ... 24V AC	✧ K
MAG 5000, Polyamid, 115 ... 230 V AC	✧ L
Communication	
No communication, add-on possible	✧ A
HART	✧ B
PROFIBUS PA Profile 3 (only MAG 6000)	✧ F
PROFIBUS DP Profile 3 (only MAG 6000)	✧ G
Modbus RTU/RS 485 (only MAG 6000)	✧ E
FOUNDATION Fieldbus H1 (only MAG 6000)	✧ J
Cable glands/terminal box	
Metric	✧ 1
½" NPT	✧ 2

[1] DN 1400 to DN 2000 (54" to 78") do not conform to PED or CRN.

✧ We can offer shorter delivery times for configurations designated with the Quick Ship Symbol ✧. For details see page 9/5 in the appendix.

3/12/18

© Siemens AG 2015

Selection and Ordering data	Order code
Additional information	
Please add **"-Z"** to Article No. and specify Order code(s) and plain text.	
Pressure test certificate according to EN 10204-3.1	**C01**
Material certificate according to EN 10204-3.1	**C12**[1]
Factory certificate according to EN 10204-2.2	**C14**
Factory certificate according to EN 10204-2.1	**C15**
Special calibration	
• 5-point calibration for DN 15 ... DN 200[2]	**D01**
• 5-point calibration for DN 250 ... DN 600[2]	**D02**
• 5-point calibration for DN 700 ... DN 1200[2]	**D03**
• 10-point calibration for DN 15 ... DN 200[3]	**D06**
• 10-point calibration for DN 250 ... DN 600[3]	**D07**
• 10-point calibration for DN 700 ... DN 1200[3]	**D08**
• Default (2 x 25 % and 2 x 90 %) match-pair calibration for DN 15 ... DN 200	**D11**
• Default (2 x 25 % and 2 x 90 %) match-pair calibration for DN 250 ... DN 600	**D12**
• Default (2 x 25 % and 2 x 90 %) match-pair calibration for DN 700 ... DN 1200	**D13**
• 5-point, matched-pair calibration for DN 15 ... DN 200[2]	**D15**
• 5-point, matched-pair calibration for DN 250 ... DN 600[2]	**D16**
• 5-point, matched-pair calibration for DN 700 ... DN 1200[2]	**D17**
• 10-point, matched-pair calibration for DN 15 ... DN 200[3]	**D18**
• 10-point, matched-pair calibration for DN 250 ... DN 600[3]	**D19**
• 10-point, matched-pair calibration for DN 700 ... DN 1200[3]	**D20**
With pre-mounted terminal blocks for remote systems	**N02**
Tag name plate, stainless steel fixed with SS wire	**Y17**
Tag name plate, plastic (self-adhesive)	**Y18**
Customer-specific converter setup	**Y20**
Sensor cables wired (specify cable Article No.)	**Y40**
Sensor for remote transmitter's junction box potted to IP68 with wired cable (specify cable Article No.)	**Y41**
Other postproduction requirements (add desired text)	**Y99**

[1] Under preparation

[2] 20 %, 40 %, 60 %, 80 %, 100 % of factory Q_{max}

[3] Ascending and descending at 20 %, 40 %, 60 %, 80 %, 100 % of factory Q_{max}

We can offer shorter delivery times for configurations designated with the Quick Ship Symbol. For details see page 9/5 in the appendix.

Operating instructions for SITRANS F M MAG 5100 W

Description	Article No.
• German	**A5E03376527**
• English	**A5E03063678**
• French	**A5E03376521**
• Spanish	**A5E03376529**
• Chinese	**A5E03376501**

This device is shipped with a Quick Start guide and a CD containing further SITRANS F literature.

All literature is also available for free at:
http://www.siemens.com/flowdocumentation

Accessories

Description	Article No.
Potting kit for terminal box of flow sensors for IP68/NEMA 6P	**FDK:085U0220**

We can offer shorter delivery times for configurations designated with the Quick Ship Symbol. For details see page 9/5 in the appendix.

MAG 5000/6000 transmitters and sensors are packed in separate boxes, the final assembly takes place during installation at the customer's place.
Communication module will be pre-mounted in the transmitter.
Please use online Product selector to get latest updates.
Product selector link: www.pia-portal.automation.siemens.com

Q 3/12/18.

© Siemens AG 2015

Dimensional drawings

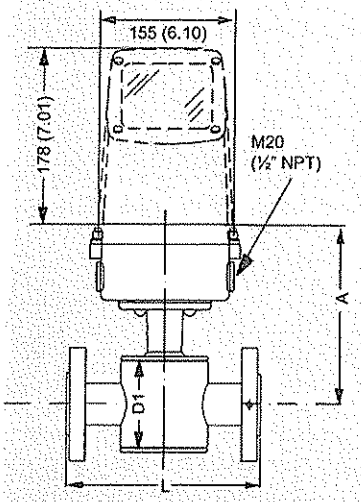

7ME6520: DN 15 ... 40 (½" ... 1½")

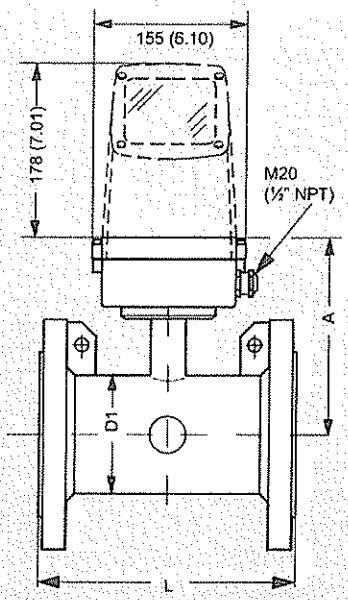

7ME6520: DN 50 ... 300 (2" ... 12")

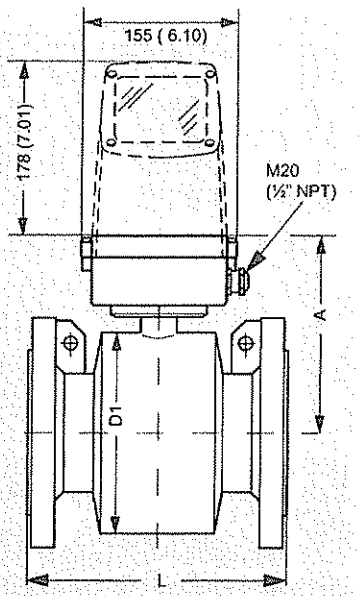

7ME6520: DN 350 ... 1200 (14" ... 48")
7ME6580: DN 25 ... 2000 (1" ... 78")

		7ME6520 NBR or EPDM liner				7ME6580 Ebonite liner					
Nominal size		A		D1		A		D1		L	
[mm]	[inch]	[mm]	[inch]	[mm]	[inch]	[mm]	[inch]	[mm]	[inch]	[mm]	[inch]
15	½	177	7.0	77	3.0	-	-	-	-	200	7.9
25	1	187	7.4	96	3.8	187	7.4	104	4.09	200	7.9
40	1½	202	8.0	127	5.0	197	7.8	124	4.88	200	7.9
50	2	188	7.4	76	3.0	205	8.1	139	5.47	200	7.9
65	2½	194	7.6	89	3.5	212	8.3	154	6.06	200	7.9
80	3	200	7.9	102	4.0	222	8.7	174	6.85	200	7.9
100	4	207	8.1	114	4.5	242	9.5	214	8.43	250	9.8
125	5	217	8.5	140	5.5	255	10.0	239	9.41	250	9.8
150	6	232	9.1	168	6.6	276	10.9	282	11.1	300	11.8
200	8	257	10.1	219	8.6	304	12.0	338	13.31	350	13.8
250	10	284	11.2	273	10.8	332	13.1	393	15.47	450	17.7
300	12	310	12.2	324	12.8	357	14.1	444	17.48	500	19.7
350	14	382	15.0	451	17.8	362	14.3	451	17.76	550	21.7
400	16	407	16.0	502	19.8	387	15.2	502	19.76	600	23.6
450	18	438	17.2	563	22.2	418	16.5	563	22.16	600	23.6
500	20	463	18.2	614	24.2	443	17.4	614	24.17	600	23.6
600	24	514	20.2	715	28.2	494	19.4	715	28.15	600	23.6
700	28	564	22.2	816	32.1	544	21.4	816	32.13	700	27.6
750	30	591	23.3	869	34.2	571	22.5	869	34.21	750	29.5
800	32	616	24.3	927	36.5	606	23.9	927	36.5	800	31.5
900	36	663	26.1	1032	40.6	653	25.7	1032	40.63	900	35.4
1000	40	714	28.1	1136	44.7	704	27.7	1136	44.72	1000	39.4
	42	714	28.1	1136	44.7	704	27.7	1136	44.72	1000	39.4
	44	765	30.1	1238	48.7	755	29.7	1238	48.74	1100	43.3
1200	48	820	32.3	1348	53.1	810	31.9	1348	53.07	1200	47.2
1400	54	-	-	-	-	925	36.4	1574	65.94	1400	55.1
1500	60	-	-	-	-	972	38.2	1672	65.83	1500	59.1
1600	66	-	-	-	-	1025	40.4	1774	75.39	1600	63
1800	72	-	-	-	-	1123	44.2	1974	77.72	1800	70.9
2000	78	-	-	-	-	1223	48.1	2174	85.59	2000	78.7

- not available

3

l 3/12/18

© Siemens AG 2015

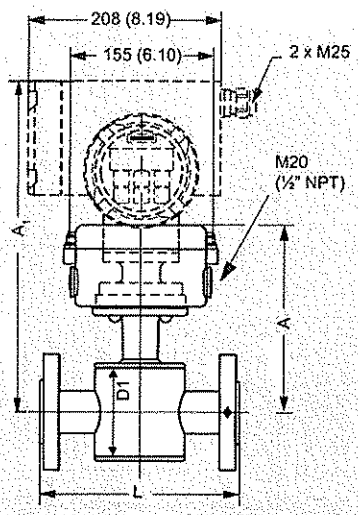

7ME6520: DN 15 ... 40 (½" ... 1½")

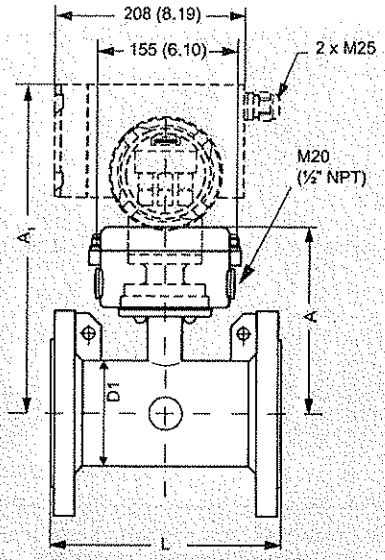

7ME6520: DN 50 ... 300 (2" ... 12")

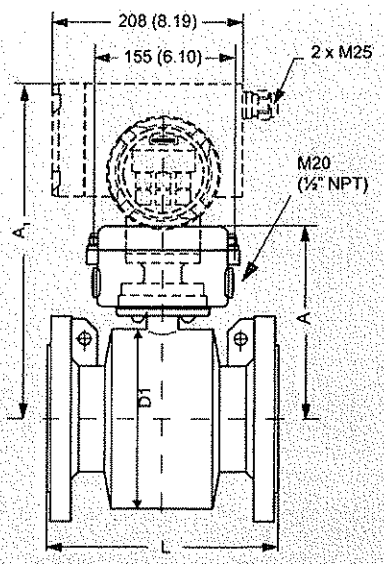

7ME6520: DN 350 ... 2000 (14" ... 78")
7ME6580: DN 25 ... 2000 (1" ... 78")

		7ME6520 NBR or EPDM liner						7ME6580 Ebonite liner							
Nominal size		A		A1		D1		A		A1		D1		L	
[mm]	[inch]	[mm]	[inch]	[mm]	[inch]	[mm]	[inch]	[mm]	[inch]	[mm]	[inch]	[mm]	[inch]	[mm]	[inch]
15	½	177	7.0	331	13.0	77	3.0	187	7.4	-	-	-	-	200	7.9
25	1	187	7.4	341	13.4	96	3.8	187	7.4	341	13.4	104	4.09	200	7.9
40	1½	202	8.0	356	14.0	127	5.0	197	7.8	351	13.8	124	4.88	200	7.9
50	2	188	7.4	342	13.5	76	3.0	205	8.1	359	14.1	139	5.47	200	7.9
65	2½	194	7.6	348	13.7	89	3.5	212	8.3	366	14.4	154	6.06	200	7.9
80	3	200	7.9	354	14.0	102	4.0	222	8.7	376	14.8	174	6.85	200	7.9
100	4	207	8.1	361	14.2	114	4.5	242	9.5	396	15.6	214	8.43	250	9.8
125	5	217	8.5	371	14.6	140	5.5	255	10.0	409	16.1	239	9.41	250	9.8
150	6	232	9.1	386	15.2	168	6.6	276	10.9	430	16.9	282	11.1	300	11.8
200	8	257	10.1	411	16.2	219	8.6	304	12.0	458	18.0	338	13.31	350	13.8
250	10	284	11.2	438	17.2	273	10.8	332	13.1	486	19.1	393	15.47	450	17.7
300	12	310	12.2	464	18.3	324	12.8	357	14.1	511	20.1	444	17.48	500	19.7
350	14	382	15.0	536	21.1	451	17.8	362	14.3	516	20.3	451	17.76	550	21.7
400	16	407	16.0	561	22.1	502	19.8	387	15.2	541	21.3	502	19.76	600	23.6
450	18	438	17.2	592	23.3	563	22.2	418	16.5	572	22.5	563	22.16	600	23.6
500	20	463	18.2	617	24.3	614	24.2	443	17.4	597	23.5	614	24.17	600	23.6
600	24	514	20.2	668	26.3	715	28.2	494	19.4	648	25.5	715	28.15	600	23.6
700	28	564	22.2	718	28.3	816	32.1	544	21.4	698	27.5	816	32.13	700	27.6
750	30	591	23.3	745	29.3	869	34.2	571	22.5	725	28.5	869	34.21	750	29.5
800	32	616	24.3	770	30.3	927	36.5	606	23.9	760	29.9	927	36.5	800	31.5
900	36	663	26.1	817	32.2	1032	40.6	653	25.7	807	31.8	1032	40.63	900	35.4
1000	40	714	28.1	868	34.2	1136	44.7	704	27.7	858	33.8	1136	44.72	1000	39.4
	42	714	28.1	868	34.2	1136	44.7	704	27.7	858	33.8	1136	44.72	1000	39.4
	44	765	30.1	919	36.2	1238	48.7	755	29.7	904	35.6	1238	48.74	1100	43.3
1200	48	820	32.3	974	38.3	1348	53.1	810	31.9	964	38.0	1348	53.07	1200	47.2
1400	54	-	-	-	-	-	-	925	36.4	1079	42.5	1574	61.97	1400	55.1
1500	60	-	-	-	-	-	-	972	38.2	1126	44.3	1672	65.83	1500	59.1
1600	66	-	-	-	-	-	-	1025	40.4	1179	46.4	1774	69.84	1600	63.0
1800	72	-	-	-	-	-	-	1123	44.2	1277	50.3	1974	77.72	1800	70.9
2000	78	-	-	-	-	-	-	1223	48.1	1377	54.2	2174	85.59	2000	78.7

- not available

© Siemens AG 2015

Weight

		7ME6520 NBR or EPDM liner										7ME6580 Ebonite liner	
Nominal size		PN 10		PN 16		PN 40		Class 150/AWWA		AS		PN 16	
[mm]	[inch]	[kg]	[lb]	[kg]	[lb]	[kg]	[lb]	[kg]	[lb]	[kg]	[lb]	[kg]	[lb]
15	½	-	-	-	-	4	9	4	9	4	9	5	11
25	1	-	-	-	-	6	12	5	11	4	9	5	11
40	1½	-	-	-	-	8	18	7	15	7	15	8	17
50	2	-	-	9	20	-	-	8	20	9	20	9	20
65	2½	-	-	10.7	24	-	-	11	24	10.7	24	11	24
80	3	-	-	11.6	26	-	-	13	28	11.6	26	12	26
100	4	-	-	15.2	33	-	-	19	41	15.2	33	16	35
125	5	-	-	20.4	45	-	-	24	52	-	-	19	42
150	6	-	-	26	57	-	-	29	64	26	57	27	60
200	8	48	106	48	106	-	-	56	124	48	106	40	88
250	10	64	141	69	152	-	-	79	174	69	152	60	132
300	12	76	167	86	189	-	-	110	243	86	189	80	176
350	14	104	229	125	274	-	-	139	307	115	254	110	242
400	16	119	263	143	314	-	-	159	351	125	277	125	275
450	18	136	299	173	381	-	-	182	400	141	311	175	385
500	20	163	359	223	491	-	-	225	495	189	418	200	440
600	24	236	519	338	744	-	-	320	704	301	664	287	633
700	28	270	595	314	692	-	-	273	602	320	704	330	728
750	30	-	-	-	-	-	-	329	725	-	-	360	794
800	32	346	763	396	873	-	-	365	804	428	944	450	992
900	36	432	951	474	1043	-	-	495	1089	619	1362	530	1168
1000	40	513	1130	600	1321	-	-	583	1282	636	1399	660	1455
	42	-	-	-	-	-	-	687	1512	-	-	-	-
	44	-	-	-	-	-	-	763	1680	-	-	1140	2513
1200	48	643	1415	885	1948	-	-	861	1896	813	1789	1180	2601
1400	54	1592	3510	-	-	-	-	-	-	-	-	1600	3528
1500	60	-	-	-	-	-	-	-	-	-	-	2460	5423
1600	66	2110	4652	-	-	-	-	-	-	-	-	2525	5566
1800	72	2560	5644	-	-	-	-	-	-	-	-	2930	6460
2000	78	3640	8025	-	-	-	-	-	-	-	-	3665	8080

- not available

With transmitter MAG 5000 and MAG 6000 compact, weight is increased by approximately 0.8 kg (1.8 lb), with MAG 6000 I, weight is increased by 5.5 kg (12.1 lb).

3/12/18

© Siemens AG 2017

Overview

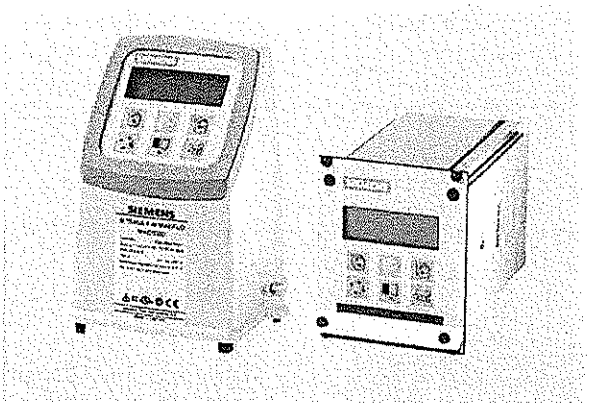

Transmitter MAG 5000/6000 compact version (left) and 19" insert version (right)

The MAG 5000 and 6000 are transmitters engineered for high performance, easy installation, commissioning and maintenance. The transmitters evaluate the signals from the SITRANS F M sensors type MAG 1100, MAG 1100 F, MAG 3100, MAG 3100 P and MAG 5100 W.

Transmitter types:

- MAG 5000: Max. measuring error ± 0.4 % ± 1 mm/s (incl. sensor)
- MAG 6000: Max. measuring error ± 0.2 % ± 1 mm/s (incl. sensor, see also sensor specifications) and with additional features such as: "plug & play" add-on bus modules; integrated batch functions.

Benefits

- Superior signal resolution for optimum turn down ratio
- Digital signal processing with many possibilities
- Automatic reading of SENSORPROM data for easy commissioning
- User configurable operation menu with password protection.
- 3 lines, 20 characters display in 11 languages.
- Flow rate in various units
- Totalizer for forward, reverse and net flow as well as additional information available
- Multiple functional outputs for process control, minimum configuration with analogue, pulse/frequency and relay output (status, flow direction, limits)
- Comprehensive self-diagnostic for error indication and error logging (see under SITRANS F M diagnostics)
- Batch control (MAG 6000 only)
- Custody transfer approval: PTB, OIML R 117, OIML R 49, MI-001, PTB K 7.2 and OE12/C 040 for chilled water
- MAG 6000 with add-on bus modules for HART, FOUNDATION Fieldbus H1, DeviceNet, Modbus RTU/RS 485, PROFIBUS PA and DP

Application

The SITRANS F M flowmeters are suitable for measuring the flow of almost all electrically conductive liquids, pastes and slurries. The main applications can be found in:

- Water and waste water
- Chemical and pharmaceutical industries
- Food and beverage industries
- Power generation and utility

Design

The transmitter is designed as either IP67 NEMA 4X/6 enclosure for compact or wall mounting or 19" version as a 19" insert as a base to be used in:

- 19" rack systems
- Panel mounting IP20/NEMA 1 (prepared for IP65/NEMA 2 display side)
- Back of panel mounting IP20/NEMA 1
- Wall mounting IP66/NEMA 4X

Several options on 19" versions are available such as:

- Transmitters mounted in safe area for Ex ATEX approved flow sensors (incl. barriers)
- Transmitters with electrode cleaning unit on request

Function

The MAG 5000/6000 are transmitters with a built-in alphanumeric display in several languages. The transmitters evaluate the signals from the associated electromagnetic sensors and also fulfil the task of a power supply unit which provides the magnet coils with a constant current.

Further information on connection, mode of operation and installation can be found in the data sheets for the sensors.

Displays and controls

Operation of the transmitter can be carried out using:

- Control and display unit
- HART communicator
- PC/laptop and SIMATIC PDM software via HART communication
- PC/laptop and SIMATIC PDM software using PROFIBUS or Modbus communication

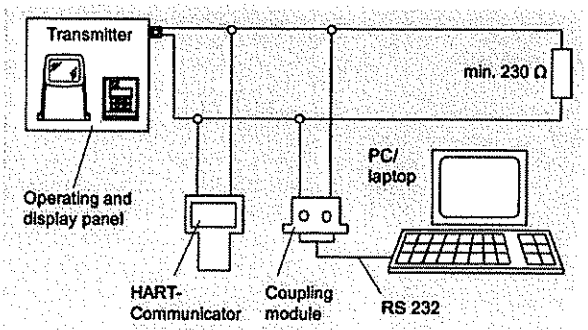

HART communication

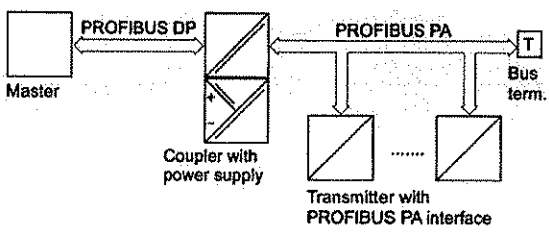

PROFIBUS PA communication

© Siemens AG 2017

Technical specifications

Mode of operation and design	
Measuring principle	Electromagnetic with pulsed constant field
Empty pipe	Detection of empty pipe (special cable required in remote mounted installation)
Excitation frequency	Depend on sensor size
Electrode input impedance	> 1 x 10^{14} Ω
Input	
Digital input	11 ... 30 V DC, R_i = 4.4 KΩ
• Activation time	50 ms
• Current	$I_{11\ V\ DC}$ = 2.5 mA, $I_{30\ V\ DC}$ = 7 mA
Output	
Current output	
• Signal range	0 ... 20 mA or 4 ... 20 mA
• Load	< 800 Ω
• Time constant	0.1 ... 30 s, adjustable
Digital output	
• Frequency	0 ... 10 kHz, 50 % duty cycle (uni/bidirectional)
• Pulse (active)	24 V DC, 30 mA, 1 KΩ ≤ R_i ≤ 10 KΩ, short-circuit-protected (power supplied from flowmeter)
• Pulse (passive)	3 ... 30 V DC, max. 110 mA, 200 Ω ≤ R_i ≤ 10 KΩ (powered from connected equipment)
• Time constant	0.1 ... 30 s, adjustable
Relay output	
• Time constant	Changeover relay, same as current output
• Load	42 V AC/2 A, 24 V DC/1 A
Low flow cut off	0 ... 9.9 % of maximum flow
Galvanic isolation	All inputs and outputs are galvanically isolated.
Max. measuring error (incl. sensor and zero point)[1)]	
• MAG 5000	0.4 % ±1 mm/s
• MAG 6000	0.2 % ±1 mm/s
Rated operation conditions	
Ambient temperature	
• Operation	• Display version: -20 ... +60 °C (-4 ... +140 °F) • Blind version: -20 ... +60 °C (-4 ... +140 °F) • MI-001 version -25 ... +55 °C (-13 ... +131 °F) • Custody transfer (CT) version -20 ... +50 °C (-4 ... +122 °F)
• Storage	-40 ... +70 °C (-40 ... +158 °F)
Mechanical load (vibration)	
Compact version	18 ... 1000 Hz, 3.17 g RMS, sinusoidal in all directions to IEC 60068-2-36
19" insert	1 ... 800 Hz, 1 g, sinusoidal in all directions to IEC 60068-2-36
Degree of protection	
Compact version	IP67/NEMA 4X/6 to IEC 529 and DIN 40050 (1 mH_2O 30 min.)
19" insert	IP20/NEMA 1 to IEC 529 and DIN 40050
EMC performance	IEC/EN 61326-1 (all environments) IEC/EN 61326-2-5

Display and keypad	
Totalizer	Two eight-digit counters for forward, net or reverse flow
Display	Background illumination with alphanumeric text, 3 x 20 characters to indicate flow rate, totalized values, settings and faults; Reverse flow indicated by negative sign
Time constant	Time constant as current output time constant
Design	
Enclosure material	
• Compact version	Fiber glass reinforced polyamide; stainless steel AISI 316/1.4436 (IP65)
• 19" insert	Standard 19" insert of aluminum/steel (DIN 41494), width: 21 TE, height: 3 HE
• Back of panel	IP20/NEMA 1; Aluminum
• Panel mounting	IP20/NEMA 1 (prepared for IP65/NEMA 2 display side); ABS plastic
• Wall mounting	IP66/NEMA 4X; ABS plastic
Dimensions	
Compact version	See dimensional drawings
19" insert	See dimensional drawings
Weight	
Compact version	0.75 kg (2 lb)
19" insert	See dimensional drawings
Power supply	• 115 ... 230 V AC +10 % -15 %, 50 ... 60 Hz • 11 ... 30 V DC or 11 ... 24 V AC
Power consumption	• 230 V AC: 17 VA • 24 V AC: 9 VA, I_N = 380 mA, I_{ST} = 8 A (30 ms) • 12 V DC: 11 W, I_N = 920 mA, I_{ST} = 4 A (250 ms) • 24 V DC: 8.4 VA, I_N = 350 mA, I_{ST} = 4 A (10 ms) I_{ST}= 4 A (250 ms): For solar panel please secure stable current supply
Certificates and approvals	
General purpose	• CE (LVD, EMC, PED, RoHS) • UL (c-UL-us)
Hazardous areas	• FM, CSA - NI Class I Div. 2 Groups A, B, C, D
Custody transfer	• Cold water: MI-001 • Chilled water - PTB K 7.2 (Germany) - OE12/C 040 (Austria) - TS 27.02 008 (Denmark)
Marine (only for remote version with MAG 5100 W, DN 50 ... DN 300)	• ABS • Bureau Veritas • DNV • GL • Lloyd's Register of Shipping
Others	• CMC/CPA (China) • C-TICK (Australia and New Zealand EMC) • EAC (Russia,Belarus, Kazakhstan) • KCC (South Korea)

Q 3/12/18

© Siemens AG 2017

Communication	
Standard	
• MAG 5000	Without serial communication or HART as option
• MAG 6000	Prepared for client-mounted add-on modules
Optional (MAG 6000 only)	HART, Modbus RTU/RS 485, FOUNDATION Fieldbus H1, DeviceNet, PROFIBUS PA, PROFIBUS DP as add-on modules
• MAG 5000/6000 CT	No communication moduls approved

[1] For detailed accuracy specifications, see page 3/22

Safety barrier (e/ia)

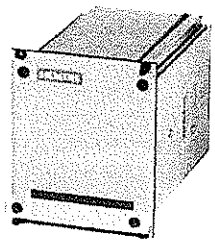

Application	**For use with MAG 5000/6000 19" and MAG 1100 Ex/MAG 3100 Ex**		
Ex approval	MAG 1100 Ex [EEx e ia] IIB ATEX, EAC Ex		
	MAG 3100 Ex [EEx e ia] IIC ATEX, EAC Ex		
Cable parameter	Group	Capacity in µF	Inductance in mH
Electrode	IIC	≤ 4.1	≤ 80
	IIB	≤ 45	≤ 87
	IIA	≤ 45	≤ 87
Ambient temperature			
• During operation	-20 ... +50 °C (-4 ... +122 °F)		
• During storage	-20 ... +70 °C (-4 ... +158 °F)		
Enclosure			
• Material	Standard 19" insert in aluminum/steel (DIN 41494)		
• Width	21 TE (4.75")		
• Height	3 HE (5.25")		
• Rating	IP20 / NEMA 1 to EN 60529		
• Mechanical load	1 g, 1 ... 800 Hz sinusoidal in all directions to EN 60068-2-36		

3/12/18

© Siemens AG 2017

Selection and Ordering data

Transmitter MAG 5000

Description	Article No.	
Transmitter MAG 5000 Blind for compact and wall mounting; IP67/NEMA 4X/6, fibre glass reinforced polyamide		
• 11 ... 30 V DC/ 11 ... 24 V AC	✧ **7ME6910-1AA30-0AA0**	
• 115 ... 230 V AC, 50/60 Hz	✧ **7ME6910-1AA10-0AA0**	
Transmitter MAG 5000 Display for compact and wall mounting; IP67/NEMA 4X/6, fibre glass reinforced polyamide		
• 11 ... 30 V DC/ 11 ... 24 V AC	✧ **7ME6910-1AA30-1AA0**	
• 115 ... 230 V AC, 50/60 Hz	✧ **7ME6910-1AA10-1AA0**	
• 115 .. 230 V AC, 50/60 Hz, with HART	✧ **7ME6910-1AA10-1BA0**	
Transmitter MAG 5000 CT for compact and wall mounting, approved for custody transfer (only with approval marks, no verification – only a complete flowmeter can be verified, i.e. sensor together with the transmitter); IP67/NEMA 4X/6, fibre glass reinforced polyamide		
• 11 ... 30 V DC/ 11 ... 24 V AC	**7ME6910-1AA30-1AB0**	
• 115 ... 230 V AC, 50/60 Hz	**7ME6910-1AA10-1AB0**	
Transmitter MAG 5000 for 19" rack and wall mounting		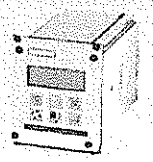
• 11 ... 30 V DC/ 11 ... 24 V AC	✧ **7ME6910-2CA30-1AA0**	
• 115 ... 230 V AC, 50/60 Hz	✧ **7ME6910-2CA10-1AA0**	

✧ We can offer shorter delivery times for configurations designated with the Quick Ship Symbol ✧. For details see page 10/11 in the appendix

Transmitter MAG 6000

Description	Article No.	
Transmitter MAG 6000 Blind for compact and wall mounting; IP67/NEMA 4X/6, fibre glass reinforced polyamide		
• 11 ... 30 V DC/ 11 ... 24 V AC	✧ **7ME6920-1AA30-0AA0**	
• 115 ... 230 V AC, 50/60 Hz	✧ **7ME6920-1AA10-0AA0**	
Transmitter MAG 6000 for compact and wall mounting; IP67/NEMA 4X/6, fibre glass reinforced polyamide		
• 11 ... 30 V DC/ 11 ... 24 V AC	✧ **7ME6920-1AA30-1AA0**	
• 115 ... 230 V AC, 50/60 Hz	✧ **7ME6920-1AA10-1AA0**	
Transmitter MAG 6000 for compact and wall mounting; IP65/NEMA 4, stainless steel AISI 316/1.4436 (only for sensor with stainless steal terminal box) (for remote version order stainless steal terminal box separately)		
• 11 ... 30 V DC/ 11 ... 24 V AC	**7ME6920-1QA30-1AA0**	
• 115 ... 230 V AC, 50/60 Hz	**7ME6920-1QA10-1AA0**	
Transmitter MAG 6000 CT for compact and wall mounting, approved for custody transfer, without verification (no approval marks - only a complete flowmeter can be verified, i.e. sensor together with the transmitter); IP67/NEMA 4X/6, fibre glass reinforced polyamide		
• 11 ... 30 V DC/ 11 ... 24 V AC	**7ME6920-1AA30-1AD0**	
• 115 ... 230 V AC, 50/60 Hz	**7ME6920-1AA10-1AD0**	
Spare part transmitter for CT systems produced before 12/2016 or with firmware version 3.03		
• 11 ... 30 V DC/ 11 ... 24 V AC	**7ME6920-1AA30-1AB0**	
• 115 ... 230 V AC, 50/60 Hz	**7ME6920-1AA10-1AB0**	
Transmitter MAG 6000 SV for compact and wall mounting; special excitation frequency 44 Hz for Batch application DN ≤ 25/1" IP67/NEMA 4X/6, fibre glass reinforced polyamide		
11 ... 30 V DC/ 11 ... 24 V AC	**7ME6920-1AB30-1AA0**	
115 ... 230 V AC, 50/60 Hz	**7ME6920-1AB10-1AA0**	

Q 3/12/18

© Siemens AG 2017

Description	Article No.	
Transmitter MAG 6000 for 19" rack and wall mounting		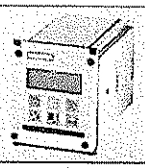
• 11 ... 30 V DC/ 11 ... 24 V AC	☆	**7ME6920-2CA30-1AA0**
• 115 ... 230 V AC, 50/60 Hz	☆	**7ME6920-2CA10-1AA0**
Transmitter MAG 6000 SV for 19" rack and wall mounting; special excitation frequency 44 Hz for Batch application DN ≤ 25/1"		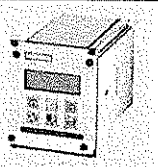
• 11 .. 30 V DC/ 11 ... 24 V AC		**7ME6920-2CB30-1AA0**
• 115 ... 230 V AC, 50/60 Hz		**7ME6920-2CB10-1AA0**
MAG 6000 19" insert, complete mounted with IP66/ NEMA 4X wall mounting enclosure in ABS plastic; 115 ... 230 V AC, 50/60 Hz; cable gland PG13.5		**7ME6920-2EA10-1AA0**
MAG 6000 SV 19" insert with safety barrier for Ex-approved sensors, complete mounted with IP66/NEMA 4X wall mounting enclosure in ABS plastic, 115 ... 230 V AC, 50/60 Hz; cable gland PG13.5		
• For ATEX 2G D sensors		**7ME6920-2MA11-1AA0**
MAG 6000 SV 19" insert, complete mounted with IP66/NEMA 4X wall mounting enclosure in ABS plastic, special excitation frequency 44 Hz for Batch application DN ≤ 25/1"; cable gland PG13.5		
• 11 ... 30 V DC, 11 ... 24 V AC		**7ME6920-2EB30-1AA0**
• 115 ... 230 V AC, 50/60 Hz		**7ME6920-2EB10-1AA0**

☆ We can offer shorter delivery times for configurations designated with the Quick Ship Symbol ☆. For details see page 10/11 in the appendix.

Operating instructions for SITRANS F M MAG 5000/6000

Description	Article No.
For SITRANS F M MAG 5000/6000 IP67	
• English	**A5E02338368**
• German	**A5E02944982**
For SITRANS F M MAG 5000/6000 19"	
• English	**A5E02082880**

All literature is available to download for free, in a range of languages, at www.siemens.com/processinstrumentation/documentation

Communication modules for MAG 6000

Description	Article No.	
HART (not for MAG 6000 I)	☆	**FDK:085U0226**
Modbus RTU/RS 485	☆	**FDK:085U0234**
PROFIBUS PA Profile 3	☆	**FDK:085U0236**
PROFIBUS DP Profile 3	☆	**FDK:085U0237**
DeviceNet	☆	**FDK:085U0229**
FOUNDATION Fieldbus H1		**A5E02054250**

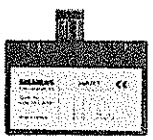

Operating instructions for SITRANS F add-on modules

Description	Article No.
HART	
• English	**A5E03089708**
PROFIBUS PA/DP	
• English	**A5E00726137**
• German	**A5E01026429**
Modbus	
• English	**A5E00753974**
• German	**A5E03089262**
FOUNDATION Fieldbus	
• English	**A5E02318728**
• German	**A5E02488856**
DeviceNet	
• English	**A5E03089720**

All literature is available to download for free, in a range of languages, at www.siemens.com/processinstrumentation/documentation

Accessories for MAG 5000 and MAG 6000

Description	Article No.	
Accessory kit for remote use of sensor with two 5-pin terminal blocks		**A5E34827189** 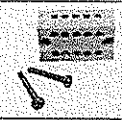
Wall mounting unit for MAG 5000/6000 IP67/NEMA 4X/6, terminal box in polyamide [1]		
• 4 x M20 cable glands	☆	**FDK:085U1018**
• 4 x ½" NPT cable glands	☆	**FDK:085U1053**
Special wall mounting unit for MAG 5000/6000 IP67/ NEMA 4X/6, mounting bracket in stainless steel AISI 316 (1.4401), terminal box in polyamide		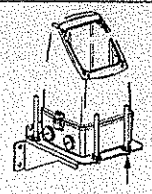
• 4 x M20 cable glands	☆	**A5E36699697**
• 4 x ½" NPT cable glands	☆	**A5E36699699**
Sun lid for MAG 5000/6000 transmitter (Frame and lid)		**A5E02328485**
Standard coil or electrode cable, 3 x 1.5 mm²/ 18 gage, single shielded with PVC jacket, Temp. range: -30 ... +70 °C (-22 ... +158 °F)		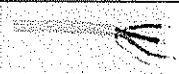
• 5 m (16.5 ft)	☆	**A5E02296523**
• 10 m (33 ft)	☆	**FDK:083F0121**
• 20 m (65 ft)	☆	**FDK:083F0210**
• 30 m (98 ft)	☆	**A5E02297309**
• 40 m (130 ft)	☆	**FDK:083F0211**
• 50 m (164 ft)	☆	**A5E02297317**
• 60 m (200 ft)	☆	**FDK:083F0212**
• 100 m (330 ft)		**FDK:083F0213**
• 150 m (500 ft)		**FDK:083F3052**
• 200 m (650 ft)		**FDK:083F3053**
• 500 m (1650 ft)		**FDK:083F3054**

☆ We can offer shorter delivery times for configurations designated with the Quick Ship Symbol ☆. For details see page 10/11 in the appendix.

[1] For stainless steel wall mounting kit, order:
- M20: FDK:085U1018 and A5E00836867
- ½ NPT: FDK:085U1053 and A5E00836868

3/12/18

© Siemens AG 2017

Description		Article No.
Special electrode cable[1] (empty pipe detection or low conductivity), 3 x 0.25 mm², double shielded with PVC jacket; Temperature range : -30 ... +70 °C (-22 ... +158 °F)		
• 10 m (33 ft)	☆	**FDK:083F3020**
• 20 m (65 ft)	☆	**FDK:083F3095**
• 40 m (130 ft)		**FDK:083F3094**
• 60 m (200 ft)		**FDK:083F3093**
• 100 m (330 ft)		**FDK:083F3092**
• 150 m (500 ft)		**FDK:083F3056**
• 200 m (650 ft)		**FDK:083F3057**
• 500 m (1650 ft)		**FDK:083F3058**
Low-noise electrode coax cable for low conductivity and high vibration levels, 3 x 0.13 mm²		
• 2 m (6.6 ft)		**A5E02272692**
• 5 m (16.5 ft)		**A5E02272723**
• 10 m (33 ft)		**A5E02272730**
Cable kit including standard coil cable (3 x 1.5 mm²/ 18 gage, single shielded with PVC jacket) and special electrode cable[1] (3 x 0.25 mm², double shielded with PVC jacket); Temperature range: -30 ... +70 °C (-22 ... +158 °F)		
• 5 m (16.5 ft)	☆	**A5E02296329**
• 10 m (33 ft)	☆	**A5E01181647**
• 15 m (49 ft)	☆	**A5E02296464**
• 20 m (65 ft)	☆	**A5E01181656**
• 25 m (82 ft)	☆	**A5E02296490**
• 30 m (98 ft)	☆	**A5E02296494**
• 40 m (130 ft)	☆	**A5E01181686**
• 50 m (164 ft)	☆	**A5E02296498**
• 60 m (200 ft)		**A5E01181689**
• 100 m (330 ft)		**A5E01181691**
• 150 m (500 ft)		**A5E01181699**
• 200 m (650 ft)		**A5E01181703**
• 500 m (1650 ft)		**A5E01181705**
Potting kit for IP68/NEMA 6P sealing of sensor junction box	☆	**FDK:085U0220**
19" safety barrier (21 TE)[1] [EEx e ia] IIC for MAG 1100 Ex sensors and MAG 3100 Ex sensors 12 ... 24 V, 115 ... 230 V, incl. back plate (A5E02559810)		**FDK:083F5034**
Front panel mounting enclosure IP65/NEMA 2 in ABS plastic for 19" insert (21 TE)		**FDK:083F5030**
Front panel mounting enclosure IP65/NEMA 2 in ABS plastic for 19" insert (42 TE)		**FDK:083F5031**

Description	Article No.
Panel mounting enclosure IP20/NEMA 1 in aluminium for 19" insert (21 TE)	**FDK:083F5032**
Panel mounting enclosure IP20/NEMA 1 in aluminium for 19" insert (42 TE)	**FDK:083F5033**
Wall mounting enclosure IP66/NEMA 4X in ABS plastic for 19" insert (cable glands and connection board not included)	
• 21 TE	**FDK:083F5037**
• 42 TE	**FDK:083F5038**
Front cover (7TE) for panel mounting enclosure	**FDK:083F4525**
Sun shield for MAG 5000/6000 transmitters in remote design	**A5E01209496**
Sun Shield for MAG 5000/ 6000 transmitter in compact design on MAG 3100 (DN 15 ... 2000/½" ... 78") or MAG 5100 W (DN 150 ... 1200/6" ... 48")	**A5E01209500**

☆ We can offer shorter delivery times for configurations designated with the Quick Ship Symbol ☆. For details see page 10/11 in the appendix.

[1] Special cables cannot be used with 19" safety barrier

Q 3/12/18

© Siemens AG 2017

Spare parts

Description	Article No.	
Connection board (for polyamide terminalbox)		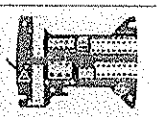
• 12 ... 24 V	**A5E02559817**	
• 115 ... 230 V	**A5E02559816**	
Connection board (for stainless steel terminal-box)		
• 12 ... 24 V	**A5E02604280**	
• 115 ... 230 V	**A5E02604272**	
Connection board MAG 5000/6000 19" insert for panel mounting enclosure, 12 ... 24 V/115 ... 230 V	**A5E02559809**	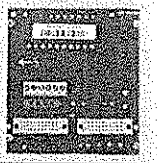
Connection board MAG 5000/6000 19" insert with safety barrier for panel mounting enclosure, 12 ... 24 V/115 ... 230 V	**A5E02559810**	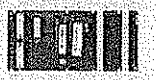
Connection board MAG 5000/6000 19" insert with safety barrier for panel mounting enclosure, 12 ... 24 V/115 ... 230 V (only for sensors produced before October 2007)	**A5E02559811**	
Connection board MAG 5000/6000 19" insert with cleaning unit for panel mounting enclosure, 12 ... 24 V/115 ... 230 V	**FDK:083F4123**	
SENSORPROM memory unit (Sensor code and serial numbers must be specified on order)		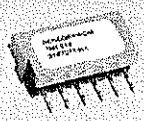
• 2 kB (for MAG 5000/6000/ MAG 6000 I)		
- 1 pc	**FDK:085U1005**	
- 10 pcs.	**FDK:083F5052**	
• 250 B (for MAG 2500/3000)	**FDK:085U1008**	
Display unit for MAG 5000/6000		
• Black neutral front	**FDK:085U1038**	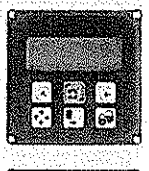
• Siemens front	**FDK:085U1039**	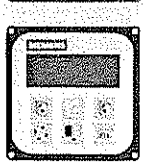
HW key	**On request**	

Description	Article No.	
Cable glands (polyamide), 4 pcs.		½" NPT M20
• M20	**A5E00822490**	
• ½" NPT	**A5E00822501**	
• PG 13.5, 2 pcs.	**FDK:083G0228**	
Sealing screws for sensor/ transmitter, 2 pcs	**FDK:085U0221**	
Terminal box, in polyamide, inclusive lid, terminal blocks, gasket and screws		
• M20	**FDK:085U1050**	
• ½" NPT	**FDK:085U1052**	
Terminal box lid, in polyamide	**FDK:085U1003**	
Terminal box, in stainless steel, inclusive lid, terminal blocks, gasket and screws, for MAG 6000 in stainless steel and for all Ex sensors,		
• M20	**A5E00836867**	
• ½" NPT	**A5E00836868**	
Terminal box (3A) for MAG 1100 F in polyamide, inclusive lid, terminal blocks, gasket and screws		
• M20	**A5E00822478**	
• ½" NPT	**A5E00822479**	
Gasket for terminal box lid in polyamide and MAG 5000/6000 IP67/ NEMA 4X/6 (5 pc.)	**A5E37086797**	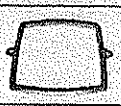
Spare part kit for remote use of sensor with 20 pcs. 5-pin terminal blocks	**A5E34346873**	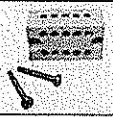
Connection board MAG 5000/6000 19" insert for wall mounting enclosure, 12 ... 24 V / 115 ... 230 V	**A5E02559813**	
Connection board MAG 5000/ 6000 19" insert with safety barrier for wall mounting enclosure, 12 ... 24 V/115 ... 230 V	**A5E02559814**	
Connection board MAG 5000/ 6000 19" insert with safety barrier for wall mounting enclosure, 12 ... 24 V/115 ... 230 V (only for sensors produced before October 2007)	**A5E02559812**	
Connection board MAG 5000/ 6000 19" insert with cleaning unit for wall mounting enclosure, 12 ... 24 V/115 ... 230 V	**A5E02559815**	
SENSORPROM programmer with RS 232 interface	**FDK:083H4246**	

We can offer shorter delivery times for configurations designated with the Quick Ship Symbol ☆. For details see page 10/11 in the appendix.

3/12/18

© Siemens AG 2017

Dimensional drawings

Transmitter IP67/NEMA 4X/6 compact polyamide

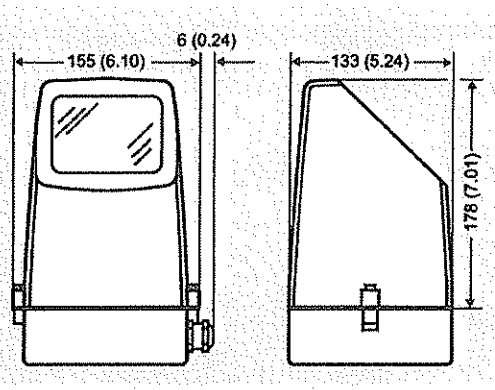

Transmitter compact mounted, dimensions in mm (inch)

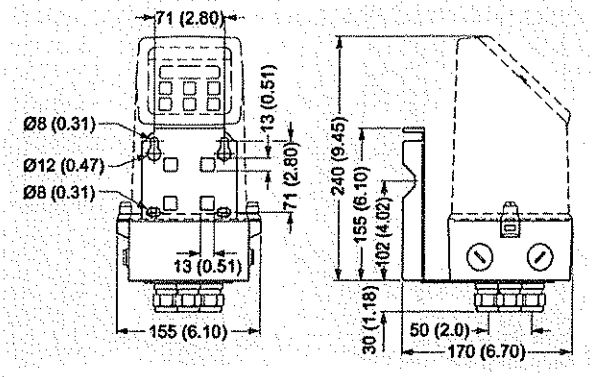

Transmitter wall mounted, dimensions in mm (inch)

Transmitter, 19" IP20/NEMA 1 standard unit

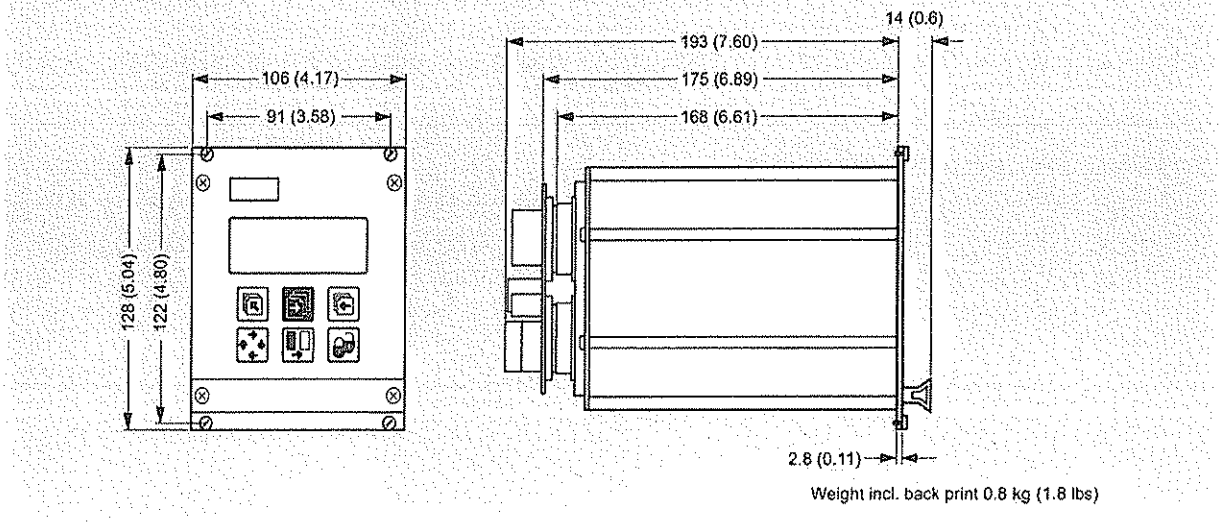

Weight incl. back print 0.8 kg (1.8 lbs)

Dimensions in mm (inch)

Q 3/12/18

© Siemens AG 2017

Transmitter, wall mounting IP66/NEMA 4X, 21 TE

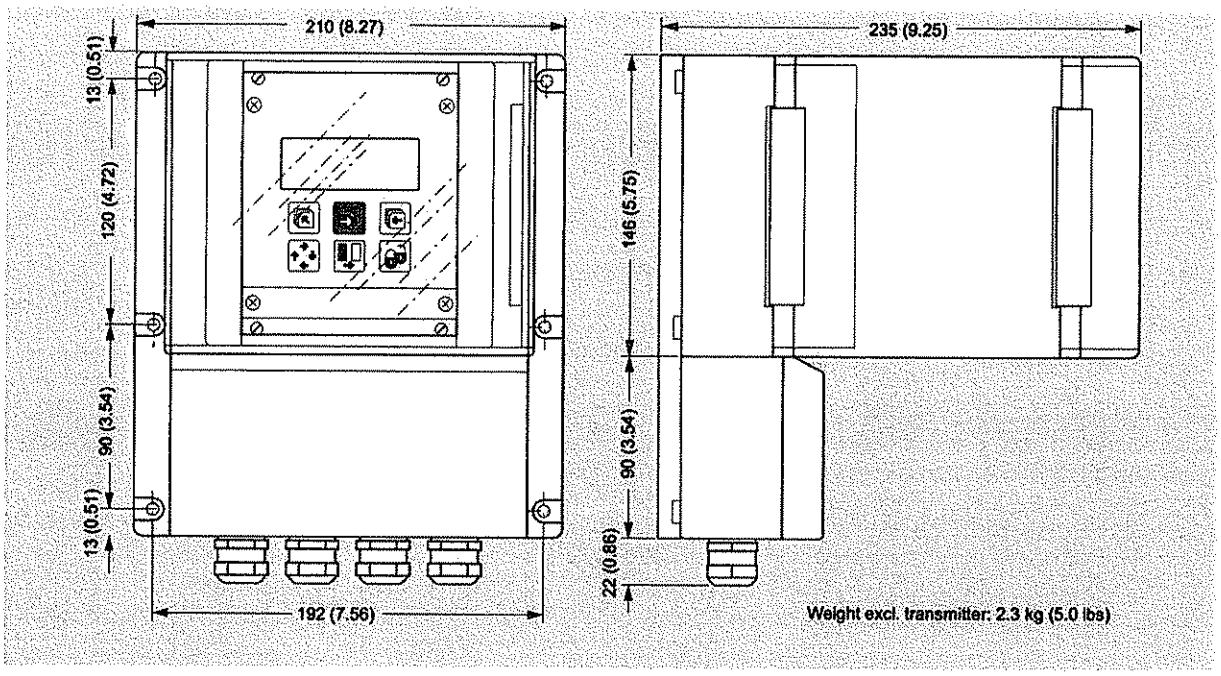

Dimensions in mm (inch)

Transmitter, wall mounting IP66/NEMA 4X, 42 TE

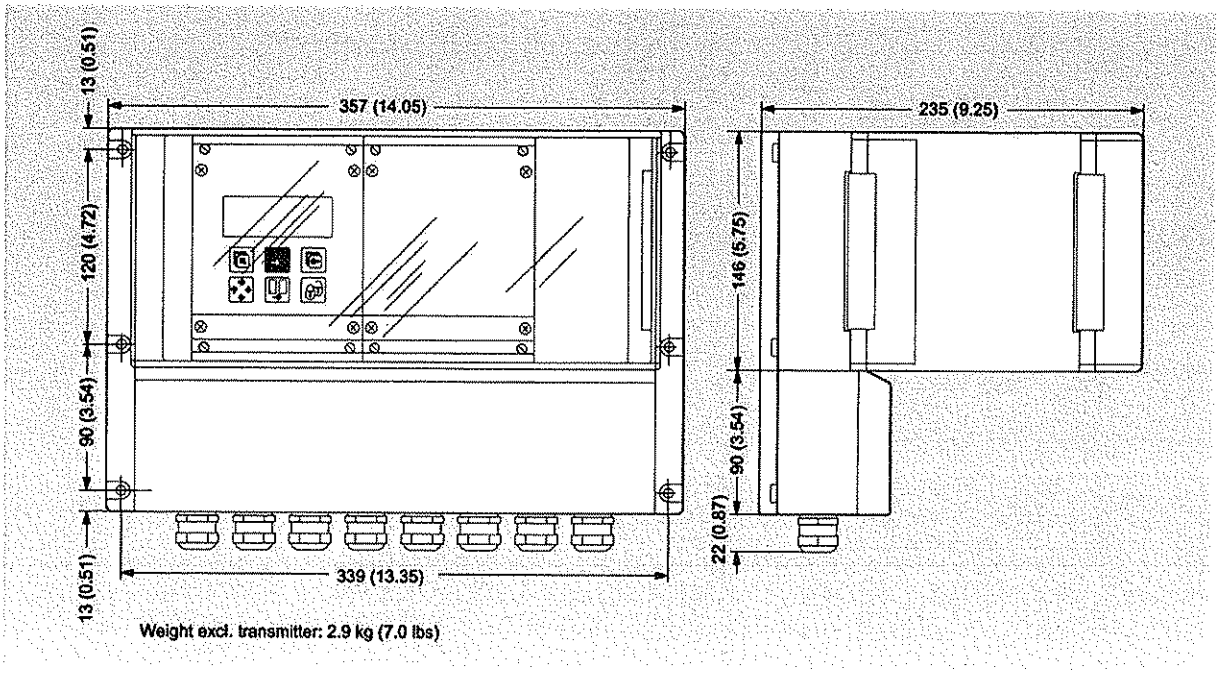

Dimensions in mm (inch)

© Siemens AG 2017

Transmitter, panel front IP20/NEMA 1, 21 TE

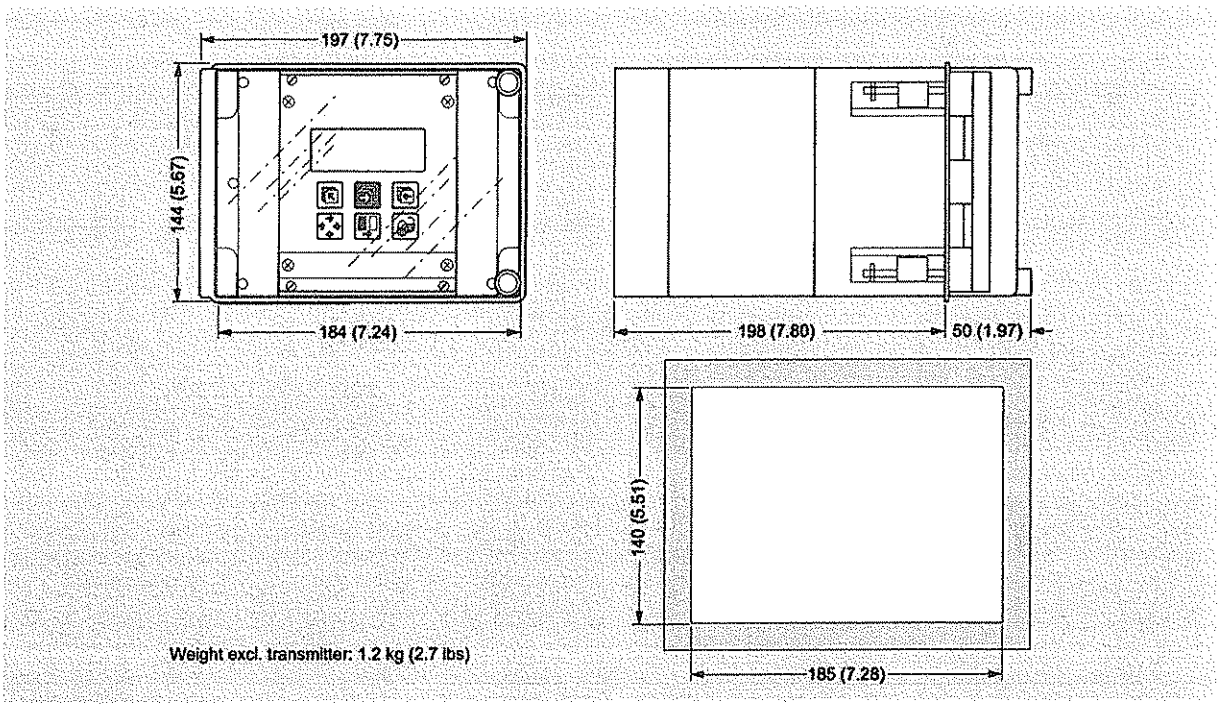

Dimensions in mm (inch)

Transmitter, panel front IP20/NEMA 1, 42 TE

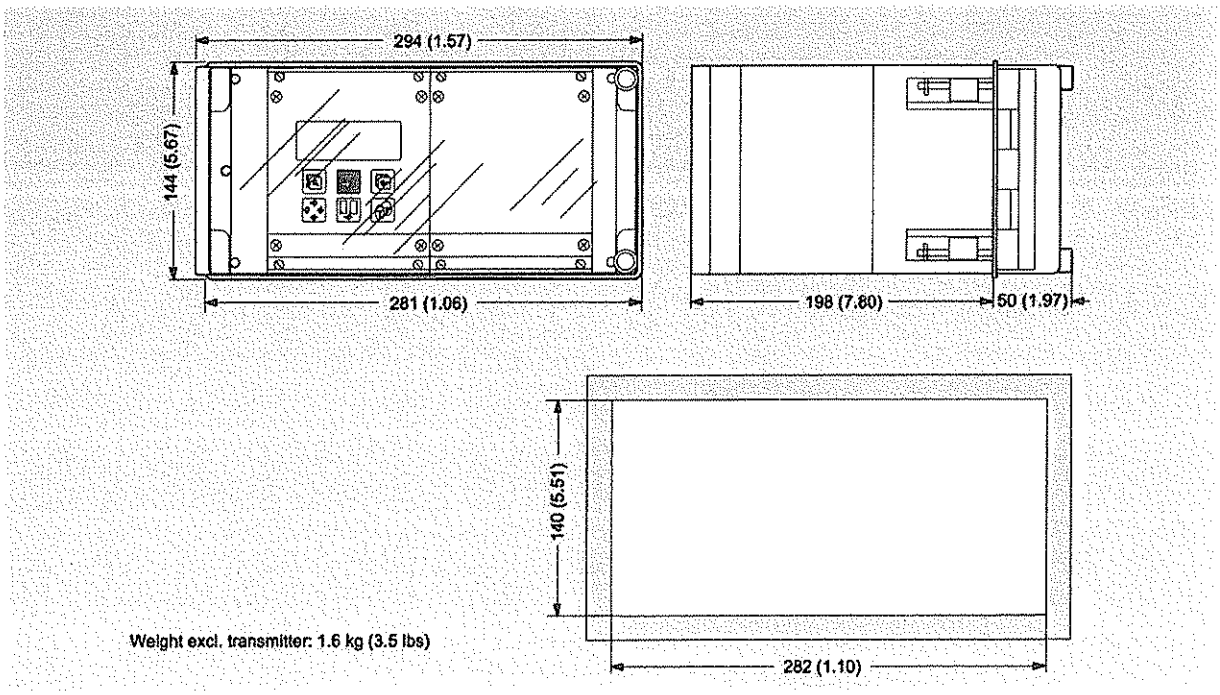

Dimensions in mm (inch)

© Siemens AG 2017

Transmitter, back of panel IP20/NEMA 1, 21 TE

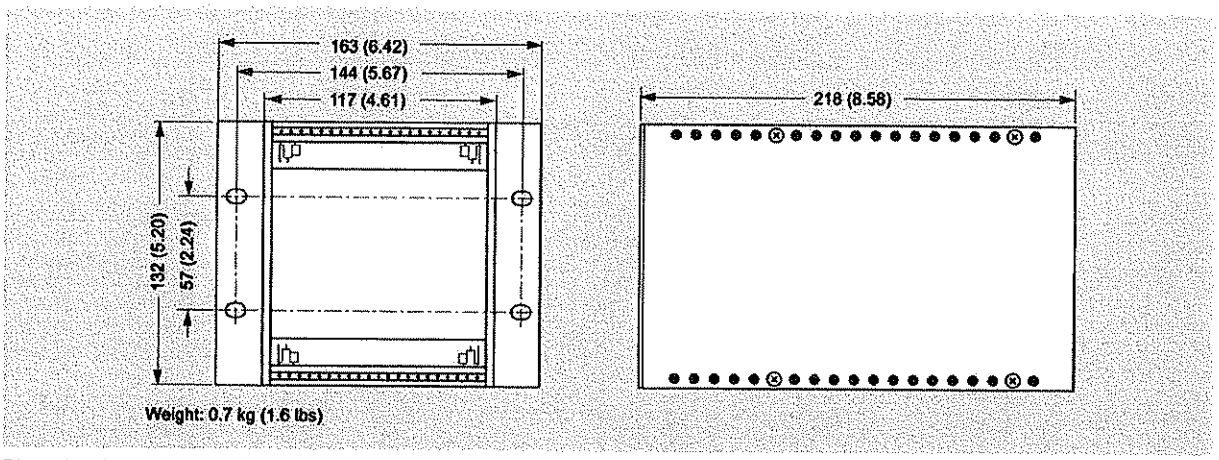

Dimensions in mm (inch)

Transmitter, back of panel IP20/NEMA 1, 42 TE

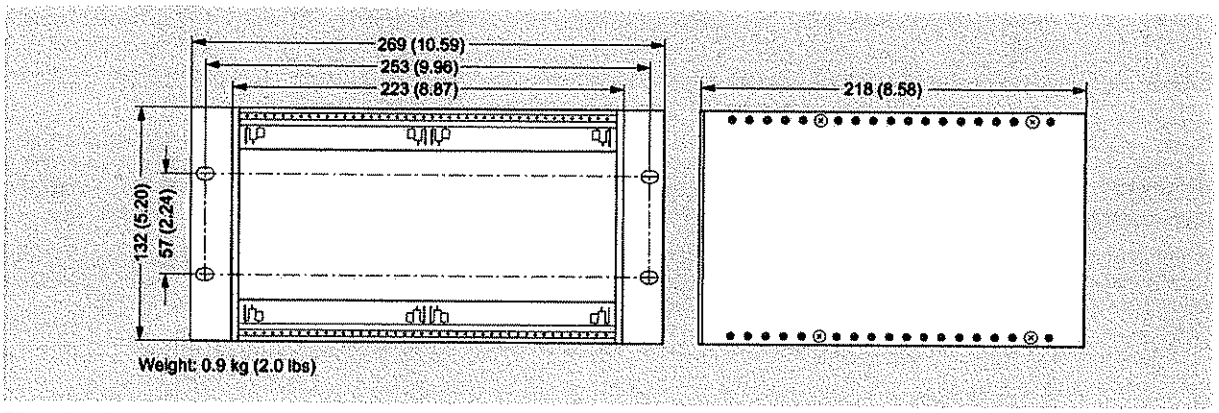

Dimensions in mm (inch)

3/19/18

© Siemens AG 2017

Schematics

Electrical connection

Grounding

PE must be connected due to safety class 1 power supply.

Mechanical counters

When mounting a mechanical counter to terminals 57 and 58 (active output), a 1000 µF capacitor must be connected to the terminals 56 and 58. Capacitor + is connected to terminal 56 and capacitor - to terminal 58.

Output cables

If the output cable length is long in noisy environment, we recommend to use shielded cable.

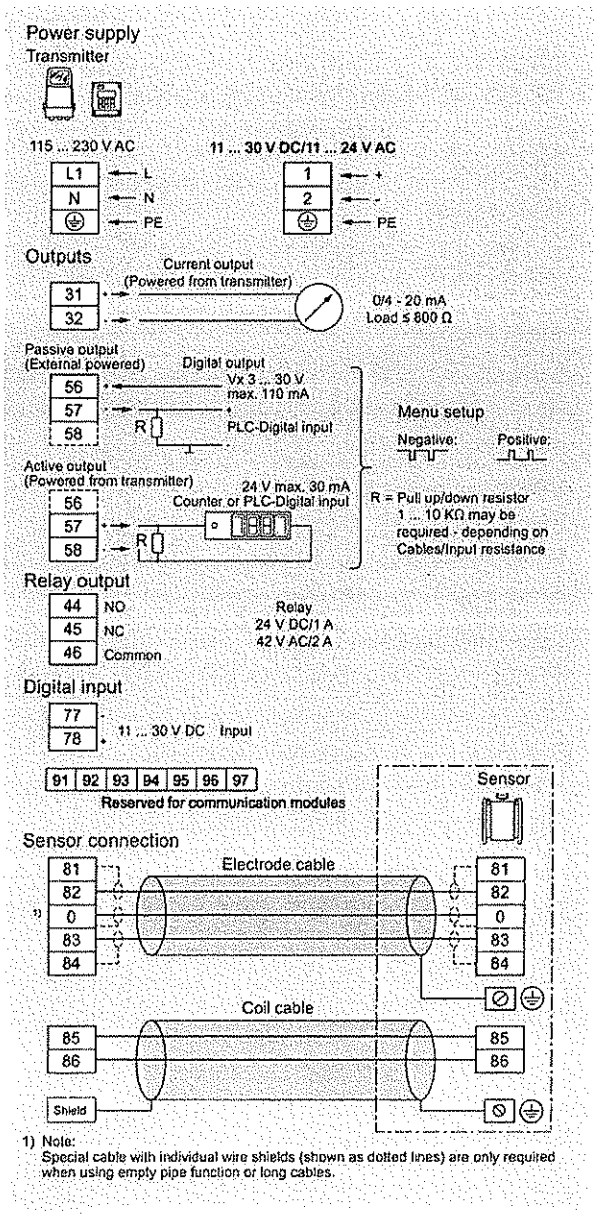

3/12/18

PH 6587 - PH 7687

pH / ORP controller

The **PH 6587** and **PH 7687** belong to the latest series of instruments developed by B&C Electronics. These products are the result of more than 40 years of experience in the measurement and control of pH and ORP.

The sensors and submersible probes in our catalog allow the visualization of the temperature value as well as the pH or ORP, making the instruments suitable for any type of application and installation.

Main features

Range
0.00 ÷ 14.00 pH
-2000 ÷ 2000 mV
-10.0 ÷ 110.0 °C, 14.0 ÷ 230.0 °F

Display
The multi-line graphic display shows the values of the measures and the messages which guide the user through set-up, configuration and during normal operation.

Keyboard
There are dedicated keys to directly access zero and sensitivity calibration as well as set point configuration.

Operating mode
The meters can operate in automatic, measure or simulated mode so to facilitate start-up or maintenance.

Two filters software
The user can set two filters in order to obtain a stable reading and a faster response to the variations of the measurement in the process.

Two analog outputs
Can be addressed to any input and programmable 0/4 – 20 mA on two points of the scale. They allow PID control or transmission of the measured values.

Two On/Off regulators
Independent and addressable to any input with programmable set point on the scale.

PID output
During PID control through the analog output, the level of the actuation is displayed.
The user can select an FM regulation (pulse frequency) or WM (pulse width) addressed to the assigned relay.

Alarm
The relay is dedicated to min/max values of the measures, the excessive activation of relays and the presence of the logic inputs.

Logic inputs
Two free voltage contacts can generate a hold or alarm condition.

Autocleaning
A relay is dedicated to an external device for the sensor self-cleaning. This function is fully programmable through the controllers' software.

Universal power supply
From 85 to 264 Vac, 50/60 Hz.
The low voltage option allows to power the unit from 9 to 36 Vdc or from 12 to 24 Vac, 50/60 Hz.

Easy installation
All 6587 series of controllers have IP65 protection rating. They are suitable for wall mounting, or for DIN rail and handrail by means of optional accessories.
Series 7687 has an IP65 front panel and it is designed for customers who prefer panel mounting.

Compatible and versatile
The analyzers are compatible with all B&C Electronics' pH (glass or antimony) and ORP sensors.
The temperature measuring and compensation is done with Pt100 or Pt1000 two or three wires probes.

3/12/18

Applications

- Aquaculture
- Chemical industry
- Drinking water
- Electroplating
- Fertirrigation
- Food and beverage
- Paper and pulp
- Pharmaceutical
- Printing industry
- Swimming pools
- Textile industry
- Underground water
- Water treatment

Technical specifications

Inputs:	pH electrodes (glass or antimony) ORP electrodes Pt100 / Pt1000
Zero:	±2pH, ±100mV, ±5°C, ±9°F
Sensitivity:	80 ÷ 110 % (70 ÷ 140 % antimony)
Resolution:	0.01 pH, 1 mV, 0.1 °C/°F
Accuracy:	0.2 %
Repeatability:	0.1 %
Non-linearity:	0.1 %
Dual filter software:	0.4 ÷ 50.0 seconds for small and large variations
Dual analog output:	0-20 mA / 4-20 mA Rmax 600 Ω
Dual set points HI/LO:	ON/OFF - PFM - PWM, SPST relays
Hysteresis:	0 ÷ 1.40 pH, 0 ÷ 200 mV
Delay:	0 ÷ 100.0 seconds
Alarm:	SPDT relay with delay 0 ÷ 100.0 seconds
Cleaning function:	off / autoclean / manual, relay SPDT repetition time 0.1 ÷ 100.0 hours cleaning time 1.0 ÷ 60.0 seconds holding time 0.0 ÷20.0 minutes
SPST and SPDT relay contacts:	220V - 5 A resistive load
Operating temperature:	-10 ÷ 60 °C
Humidity:	95% without condensation
Power supply:	85 ÷ 264Vac - 50/60 Hz 9 ÷ 36Vdc, 12 ÷ 24Vac (option 091.42x)
Terminal blocks:	removable
Weight:	1360 g (PH 6587) 450 g (PH 7687)
Enclosure:	ABS, IP 65 protection (PH 6587) Metallic, IP 65 front panel only (PH 7687)
Dimensions:	256x230x89 mm (PH 6587) 98 x 98 x 104 mm, 90 x 90 x 95 mm panel cutout (PH 7687)
EMC/RFI conformity:	EN 61326
Registered design:	002564666-002 (PH 6587) 002564666-003 (PH 7687)

The technical specifications could be changed without notice.

3/12/18

Series 6587 dimensions and installation

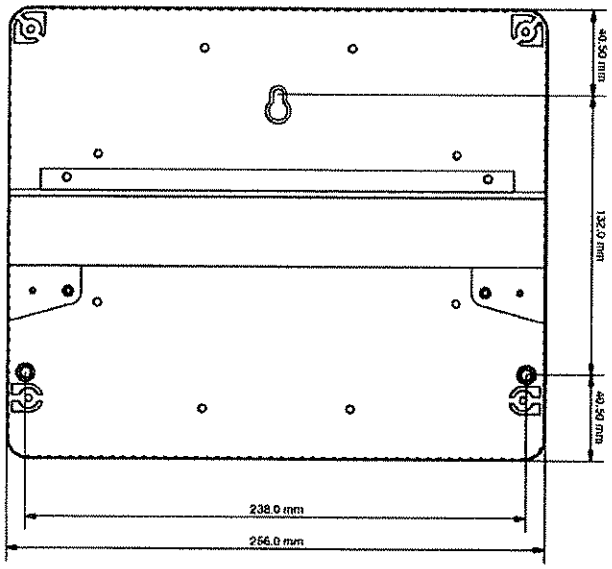

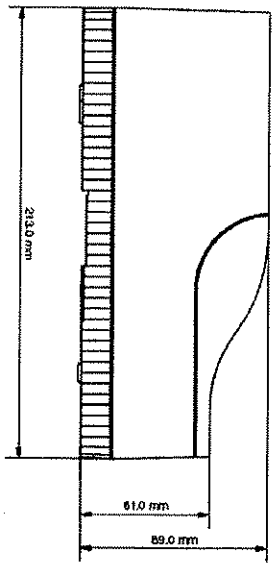

Wall

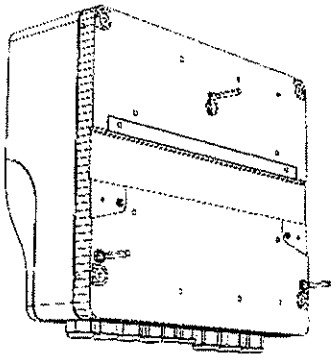

DIN rail

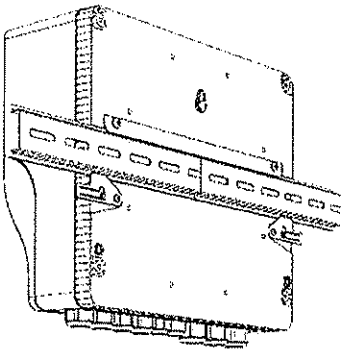

Pipe

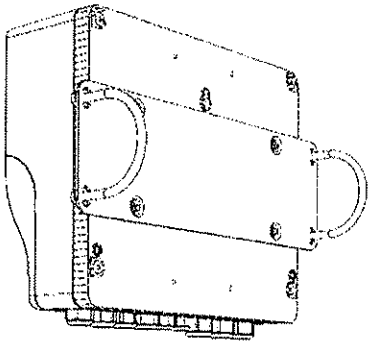

Series 7687 dimensions

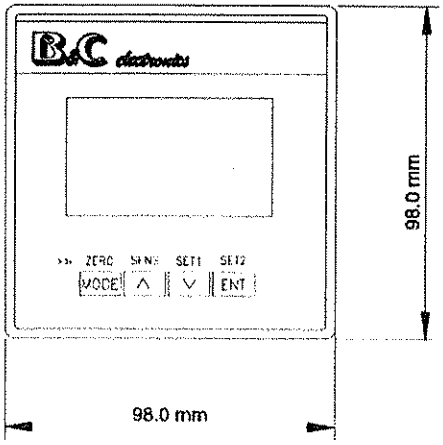

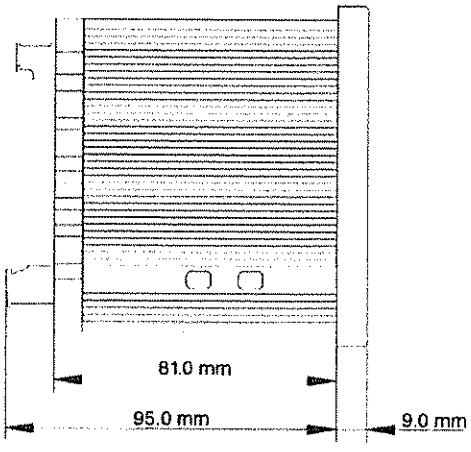

3/12/18

Epoxy pH electrodes

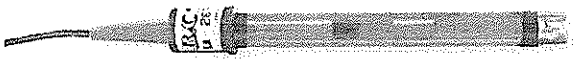

SZ 142
pH electrode Glass/Ref. combination, epoxy body, Gel sealed, cable 1.5 m with BNC.
Applications: clean water, portable instruments, swimming-pools.

SZ 145
pH electrode Glass/Ref. combination, epoxy body, Gel sealed, cable 9 m.
Applications: clean water at room temperature, industrial instruments. In-line up to 7 bar.

SZ 1021
pH electrode, Glass/Ref. combination, sealed Gel, epoxy body.
Low cost (10 pcs minimum order), cable 1 m with BNC.
Applications: portable instruments.

SZ 1025
pH electrode, Glass/Ref. combination, sealed Gel, epoxy body.
Low cost (10 pcs minimum order), cable 9 m.
Applications: clean water at room temperature, industrial instruments. In-line up to 7 bar.

SZ 151
pH electrode glass/Ref. double junction combination, epoxy body for high temperature applications, cable 1.5 m with BNC.
Applications: very contaminated liquids or high temperature.

SZ 1075
Antimony pH electrode, combination, epoxy body, cable 9 m.
Applications: liquids with HF contents. It requires a special input pHmeter.

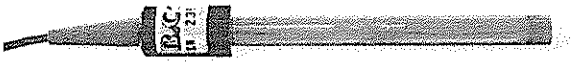

SZ 1131
Puncture tip pH electrode, epoxy body, PTFE junction.
1 m cable with BNC.
Applications: green houses, agricolture.

SZ 1093
Hydroponic pH electrode, epoxy body L=75 mm,
cable 3 m with BNC.
Applications: green houses, agricolture. In-line up to 7 bar.

Glass pH electrodes

SZ 160
pH Electrode Glass/Ref combination, glass body, anular junction, S7 connector.
Applications: contaminated liquids, portable instruments, laboratory.

SZ 161
pH Electrode Glass/Ref combination, glass body, anular junction, cable 1.5 m with BNC.
Applications: contaminated liquids, portable instruments, laboratory. In line up to 10 bar.

SZ 165
pH Electrode Glass/Ref combination, glass body, anular junction, cable 9 m.
Applications: general purpose, industrial meters, in line up to 10 bar.

SZ 171
Same as SZ 173. Cable 1.5 m with BNC.
Applications: contaminated liquids, amplified probes, portable instruments.

SZ 173
pH Electrode Glass/Ref combination, glass body, double anular junction, cable 9 m.
Applications: contaminated liquids, amplified probes, industrial and heavy applications. In line up to 10 bar.

SZ 195.2
pH Electrode Glass GX-V/Ref combination, glass body, low alkaline error, double anular junction, high temperature gel, cable 9 m.
Applications: contaminated and high temperature liquids, industrial and heavy applications. In line up to 10 bar.

SZ 1031
pH electrode, Glass/Ref. combination refillable, glass body, cable 1.5 m with BNC.
Applications: very contaminated liquids, portable instruments, laboratory.

3/12/18

Technical Specifications

Type	Membrane	R. Mohm at 25 °C	Range pH	Temperature °C	Length mm	Diameter mm	Reference
SZ 142	GX 2	50	0 / 13	0 / 60	110	12	Ag/AgCl
SZ 145	GX 2	50	0 / 13	0 / 60	110	12	Ag/AgCl
SZ 1021	GX 2	50	0 / 13	0 / 60	110	12	Ag/AgCl
SZ 1025	GX 2	50	0 / 13	0 / 60	110	12	Ag/AgCl
SZ 151	GX 2	100	0 / 13	-5 / 130	110	12	Ag/AgCl e KNO3
SZ 160	GX 2	50	0 / 13	0 / 100	110	12	Ag/AgCl
SZ 161	GX 2	50	0 / 13	0 / 100	110	12	Ag/AgCl
SZ 165	GX 2	50	0 / 13	0 / 100	110	12	Ag/AgCl
SZ 171	GX 2	50	0 / 13	0 / 100	110	12	Ag/AgCl e KNO3
SZ 173	GX 2	50	0 / 13	0 / 100	110	12	Ag/AgCl e KNO3
SZ 195.2	GX-V	200	0 / 14	-5 / 130	110	12	Ag/AgCl e KNO3
SZ 1031	GX2	50	0 / 13	0 / 80	110	12	Ag/AgCl
SZ 1075	Antimony	-	2 / 11	-5 / 100	110	12	Ag/AgCl
SZ 1093	GX2	50	0 / 13	0 / 80	75	12	Ag/AgCl
SZ 1131	GX1	300	0 / 12	-5 / 100	110	9.5	Ag/AgCl

pH autoclean flat electrodes

This is a new and more rugged flat electrodes generation.
They may be used in immersion or in-line for an autoclean effect by the liquid flow.

The reference electrode is a double junction in order to ensure a long life even in liquid containing Ammonia, Chlorine, Cyanide, Sulfide and other contaminating ions.

The body is in PVDF, corrosion resistant and food compatible.
The special shape protects mechanically the sensing parts.

SZ 1140

pH electrode, PTFE double junction, polymeric gel.
Range: 0/12 pH
Temperature: 0/100 °C
Pressure: 10 bar
Body: in PVDF, DL connector, 3/4" NPT thread
Length: 140 mm (45 mm in immersion)
Cable: SZ 947, L=8 m (not included)

SZ 1150

pH electrode, PTFE double junction, polymeric gel, built-in Pt100.
Range: 0/12 pH
Temperature: 0/100 °C
Pressure: 10 bar
Body: in PVDF, Military 4-pin connector, 3/4" NPT thread
Length: 140 mm (45 mm in immersion)
Cable SZ 9441: 10 m + connector (to be order separately)

SZ 2060

ORP electrode, PTFE double junction, polymeric gel.
Electrode: Platinum disk
Temperature: 0/100 °C
Pressure: 10 bar
Body: in PVDF, DL connector, 3/4" NPT thread
Length: 140 mm (45 mm in immersion)
Cable: SZ 947, L=8 m (not included)

Q 3/12/18

Epoxy O.R.P. electrodes

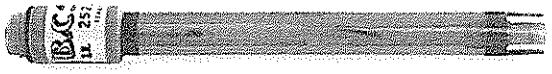

SZ 240
Gold/Reference combination electrode. Sealed Gel, epoxy body, S7 connector.
Applications: clean water, portable instruments, laboratory.

SZ 250
Platinum/Reference combination electrode. Sealed Gel, epoxy body, S7 connector.
Applications: clean water, portable instruments, laboratory.

SZ 245
Gold/Reference combination electrode. Sealed Gel, epoxy body, cable 9 m.
Applications: clean water, swimming pools, industrial instruments. In-line up to 7 bar.

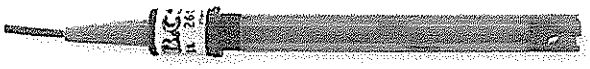

SZ 2011
Platinum wire/Reference combination electrode. Sealed Gel, epoxy body, cable 1.5 m with BNC connector.
O.E.M. low cost version. (10 pcs. minimum order).
Applications: Swimming pools, portable and industrial instruments. In-line up to 7 bar.

SZ 2055
Platinum/Reference combination electrode. Sealed Gel, epoxy body, double junction, cable 9 m.
Applications: liquid with HF contents, high temperature, industrial instruments. In-line up to 10 bar.

SZ 251
Platinum/Reference combination electrode. Sealed Gel, epoxy body, cable 1.5 m with BNC connector.
Applications: clean water, swimming pools, portable instruments, laboratory. In-line up to 7 bar.

SZ 255
Platinum/Reference combination electrode. Sealed Gel, epoxy body, cable 9 m.
Applications: clean water, swimming pools, industrial instruments. In-line up to 7 bar.

SZ 2035
ORP electrode Band-Platinum/Ref. combination, epoxy body, Gel sealed, cable 9 m. Low cost (10 pcs minimum order).
Applications: clean water, industrial instruments. In-line up to 7 bar.

Glass O.R.P. electrodes

SZ 265
Gold/Reference combination electrode. Sealed Gel, glass body, cable 9 m.
Applications: cyanide treatment, industrial instruments. In-line up to 10 bar.

SZ 275
Platinum/Reference combination electrode. Sealed Gel, glass body, cable 9 m.
Applications: general purpose, chromate treatment, swimming pools, industrial instruments. In-line up to 10 bar.

Technical Specifications

Type	Metal	Temperature °C	Length mm	Diameter	Reference
SZ 240	Gold	0 / 60	110	12	Ag/AgCl
SZ 245	Gold	0 / 60	110	12	Ag/AgCl
SZ 250	Platinum	0 / 60	110	12	Ag/AgCl
SZ 251	Platinum	0 / 60	110	12	Ag/AgCl
SZ 255	Platinum	0 / 60	110	12	Ag/AgCl
SZ 2035	Platinum	0 / 60	110	12	Ag/AgCl
SZ 265	Gold	-5 / 110	110	12	Ag/AgCl
SZ 275	Platinum	-5 / 110	110	12	Ag/AgCl
SZ 2011	Platinum	0 / 60	110	12	Ag/AgCl
SZ 2055	Platinum	-5 / 130	110	12	Ag/AgCl + KNO3

3/12/18

Cables and connectors

SZ 9211
Coax cable 2.5 mm L = 8 m

SZ 9215
Coax cable 2.5 mm L = 100 m

SZ 926
Shielded cable 7x0.25 mm Diameter 6.4 mm

SZ 933
BNC connector

SZ 935
S7 connector

SZ 945
S7 connector + 8 m coax cable

SZ 947
DL connector + 8 m coax cable

SZ 9471
DL connector + 2 m coax cable with BNC

Standard solutions

SZ 952
Buffer solution 4.01 pH 250 cc.

SZ 954
Buffer solution 7.00 pH 250 cc.

SZ 956
Buffer solution 9.21 pH 250 cc.

SZ 961
ORP standard solution 220 mV 250 cc.

3/12/18

IQNet

THE INTERNATIONAL CERTIFICATION NETWORK

CERTIFICATE

IQNet and its partners

CISQ/IMQ-CSQ

hereby certify that the organization

B & C ELECTRONICS SRL

VIA PER VILLANOVA 3 - 20040 CARNATE (MI)

for the following field of activities

Designing, manufacturing and distribution of liquid and gas analyzers

[illegible]

has implemented and maintains a

Quality Management System

which fulfils the requirements of the following standard

ISO 9001:2008

Issued on 2009 - 10 - 30

Registration Number:

IT - 1309

IQNet

Rene Wanner

President of IQNET

CISQ

Gianmaria Prati

President of CISQ

IQNet partners

[illegible]

l 3/12/18

E. Conductivity controller

Applications

- deionized water
- drinking water
- food industry
- surface treatment

Selectable input from:

- 2 electrodes
- 4 electrodes pre-amplified cell
- electrodeless pre-amplified cell

Scales: from 0.2 mS to 40 Siemens
Autoranging
Conversion in % - gr/l - Bè
Temperature readout
Dual filter software

Calibration parameters display
Dual set-point and alarm conditions display
Automatic or manual temperature compensation
Automatic or manual acquisition of the temperature compensation table

Isolated output:

- 0/20 mA or 4/20 mA selectable
- programmable input on the span

Automatic or manual operation
Dual Set-point with hysteresis, delay, and min/max programmable functions

Alarm:

- continuous/flashing
- min/max and delay programmable
- on Set-points timing

Automatic overload protection and reset
Extractable terminal block
96x96 (1/4 DIN) housing

Accessories

The controller can be used with all B&C Electronics conductivity cells, including the 4-electrodes and toroidal amplified probes

Input from 2-electrode cells

K cm⁻¹	0,1	0,2	0,5	1,0	2,0	5,0	10,0
Range	0,2000µS	0,4000µS	1,000µS	2,000µS	4,000µS	10,00µS	20,00µS
	2,000µS	4,000µS	10,00µS	20,00µS	40,00µS	100,0µS	200,0µS
	20,00µS	40,00µS	100,0µS	200,0µS	400,0µS	1000µS	2000µS
	200,0µS	400,0µS	1000µS	2000µS	4000µS	10,00mS	20,00mS
	2000µS	4000µS	10,00mS	20,00mS	40,00mS	100,0mS	200,0mS

Input from microtransmitters 080310 connected to 4-electrode cells or input from microtransmitters 080315 connected to electrodeless cells

K cm⁻¹	0,1	0,2	0,5	1,0	2,0	5,0	10,0
Range	0,2000mS	0,4000mS	1,000mS	2,000mS	4,000mS	10,00mS	20,00mS
	2,000mS	4,000mS	10,00mS	20,00mS	40,00mS	100,0mS	200,0mS
	20,00mS	40,00mS	100,0mS	200,0mS	400,0mS	1000mS	2000mS
	200,0mS	400,0mS	1000mS	2000mS	4000mS	10,00S	20,00S
	2000mS	4000mS	10,00S	20,00S	40,00S	100,0S	200,0S

Technical Specifications

in addition to those common in the series 7685

Scales (See tables Scales vs. K)
* Autoranging: on/off
* Indirect scale: on/off
Zero adjustment: ±10 %
Sens. adjustment: 60/160 %
* Software filter 90%RT: 0.4/20.0 s for small/large variations

Temperature
Measuring and compensation range: -10.0/+110.0 °C
Resolution: +/- 0.1 °C
Zero adjustment: +/- 1 °C
Manual Temp. comp: -10.0/+110.0 °C

Options
091.3713 dual analog programmable and isolated output. The operator may select an output for Temperature.
091.4143 9/36 VDC power supply

3/12/18

7685 Series microprocessor-based

General information

The **7685 Series** ncludes all of the most complete and most performing analyzers of B&C Electronics.
They include all of the following measures:

- **pH - ORP**
- **Conductivity - Resistivity**
- **Free residual chlorine, combined and total**
- **Residual chlorine dioxide**
- **Residual dissolved ozone**
- **Dissolved oxygen**
- **Turbidity and Suspended Solids**
- **Residual dissolved Sulfide/Sulfite**
- **ISE**

All controllers are manufactured in robust aluminum enclosures DIN 43700, with front panels in polycarbonate.
Their reliability and precision, along with their functionality, make them easy to use in all applications. Finally, 7685 Series guarantees one of the best performance-price ratio in the marketplace.

Common features

Selectable input
Input from RTD Pt100 3 wires
Temperature readout
Dual filter software
Operating mode: automatic and manual
Calibration parameters display
Set-point and alarm conditions display
Automatic or manual temperature compensation
0/20 mA or 4/20 mA programmable isolated output
Dual set-point with hysteresis, delay and min/max programmable functions
Min/max and set-points timing alarm relay
Software: 3 access levels, user friendly, keyboard lock,watch-dog
EEPROM parameters storage
Automatic overload protection and reset
Extractable terminal blocks
96X96 (1/4" DIN) housing

Fieldbus Communication

The system is based on a digital communication through an open Modbus protocol, which interacts with the following Fieldbus:
Profibus DP, Profinet, Modbus-TCP, DeviceNet, CANopen, EtherNet /IP/Modbus-TCP
Customers can view the main data and functions, such us:

- Primary and secondary measuring values
- Error messages
- Set-points relay, alarm relay and autoclean relay status

The "Virtual Instrument" is an innovative solution through which Customers can perform, from a remote station, all specific operations.
Custom versions with bidirectional communication of data are available for O.E.M. and system integrators.

Technical Specifications

common to all instruments of the 7685 Series

Temperature
Input: RTD Pt100 2/3 wires

Set point A and B:
Operation: ON/OFF
Hysteresis: adjustable
Delay: 0.0/99.9 s
* Function: Max/Min
Relay contacts: SPDT 220V 5 A (resistive load)

Alarm:
Low/High: adjustable
Delay: 0.0/99.9 s
* Relay status: activated/deactivated
* Alarm on max. operating time of set-point A/B: ON/OFF
* Max operating time of set-point A/B: 0/60 minutes
* Relay contacts: SPDT 220V 5 A (resistive load)

Analog output N° 1
* Input corresponding to the analog output (option 091.371x): selectable
* Output range: 0-20/4-20 mA (it can be made to represent any segment of the measuring scale
Response time: 2.5 s for 98%
Isolation: 250Vac
Load: 600 ohm max

Analog outpunt N° 2 (option 091.371x)
* Input corresponding to the analog output: selectable
* Output range: 0-20/4-20 mA (it can be made to represent any segment of the measuring scale
Response time: 2.5 s for 98%
Isolation: 250Vac
Load: 600 ohm max

Configuration (*)
The above parameters indicated by asterisks "*", may be selected in the Configuration menu

General Specification
Alphanumeric display: 1 line x 16 characters
Operating temperature: 0/50 °C
Humidity: 95% without condensation
Power supply: 110/220Vac ± 10% 50/60 Hz
Isolation: 4 kV between primary and secondary (IEC 348)
Power: 5VA max.
Terminal block: extractable
Weight: 850 g
Dimensions: 96 x 96 x 155 mm

Options

091.701	RS 232 isolated output The output sends the data to the serial port of the computer.
091.404	24Vac power supply
091.414X	9/36VDC power supply

The technical specifications could be changed without notice

B&C Electronics srl 20866 Carnate MB Tel. +39 039631721 Fax +39 0396076099 bc@bc-electronics.it **www.bc-electronics.it**

3/12/18

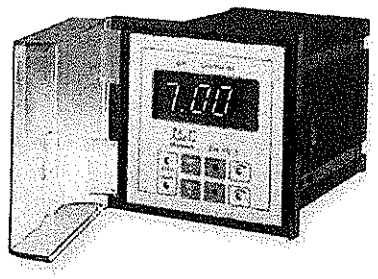

SZ 7601

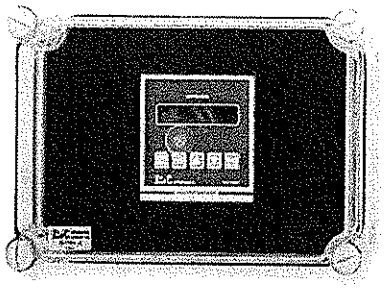

BC 931.2

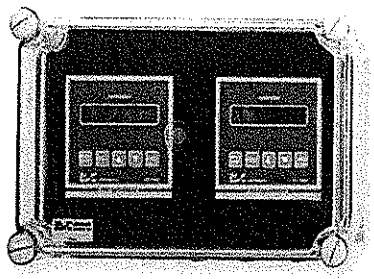

BC 931.3

Series 7685, 7635, 7335 and 7615

SZ 7601
Transparent splashproof front door for 7685, 7635 and 7615
Protection: IP 54

BC 931.2
Watertight enclosure with transparent front door suitable for the installation of one 7685, 7635 or 7615 unit.
Protection: IP 65 (NEMA 4X)
Size: 270x180x238 mm

BC 931.3
Watertight enclosure with transparent front door suitable for the installation of two 7685, 7635 or 7615 units.
Protection: IP 65 (NEMA 4X)
Size: 270x180x238 mm

BC 9616.2
Watertight enclosure with transparent front door suitable for the installation of one 7685 or 7615 unit. Low cost.
Protection: IP 65 (NEMA 4X)
Size: 200x200x187 mm
Dimensioni: 200x200x187 mm.

BC 9611.2
Watertight enclosure with transparent front door suitable for the installation of one 7635 unit. Low cost.
Protection: IP 65 (NEMA 4X)
Size: 200x200x132 mm

BC 9611.4
Watertight enclosure with transparent front door suitable for the installation of one or two 7335 units. Low cost.
Protection: IP 65 (NEMA 4X)
Size: 200x200x132 mm

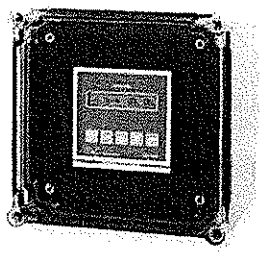

BC 9616.2

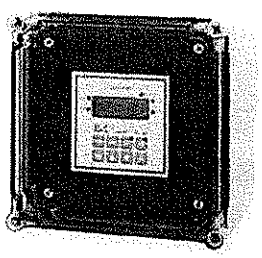

BC 9611.2

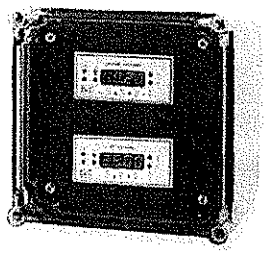

BC 9611.4

B&C electronics
B&C Electronics srl
20866 Carnate MB Tel. +39 039631721 Fax +39 0396076099 bc@bc-electronics.it www.bc-electronics.it

Q 3/12/18

Two electrodes

SI 301
In-line E.Conductivity probe.
Applications: from 0 to 2 mS
Cell constant: K=1 cm^{-1}
Body: PVC
2 Electrodes: 316 S.Steel
Thread: 1"BSP
Operating temperature: 40 °C max.
Operating pressure: 3 bar max. at 25 °C
Option: non standard materials and cell constant.

SI 3013
In-line E.Conductivity probe
Applications: from 0 to 2 mS
Cell constant: K=1 cm^{-1}
Body: Polypropilene
2 Electrodes: 316 S.Steel
Thread: 1"BSP
Operating temperature: 50 °C max.
Operating pressure: 3 bar max. at 25 °C
Option: non standard materials and cell constant.

SI 308T
In-line E.Conductivity probe + Pt100
Applications: for high purity water.
Cell constant: K=0.01 cm^{-1}
Body: PVC
Electrodes: 316 S.Steel
Temperature sensor: Pt100
Thread: 1"BSP
Operating temperature: 50 °C max.
Operating pressure: 3 bar max. at 25 °C
Cable: 3 mt

SZ 3252
Three black Platinum band electrodes, K=1 cm^{-1}, epoxy body, cable 1.5 m with BNC connector.
Applications: portable instruments, laboratory.

SZ 3271
Two graphite electrodes, K=1 cm^{-1}, epoxy body L=110 mm D=12 mm, cable 1.5 m with BNC connector.
Applications: in-line up to 10 bar and 80 °C, range 0/80 mS.

SZ 3273.1
Two graphite electrodes, K=1 cm^{-1}, built-in Pt100, epoxy body L=110 mm D=12 mm, cable 3 m.
Applications: in-line up to 10 bar and 80 °C, range 0/80 mS.

SZ 3273.4
Two graphite electrodes, K=1 cm^{-1}, built-in NTC 10K, epoxy body L=110 mm D=12 mm, cable 3 m.
Applications: in-line up to 10 bar and 80 °C, range 0/80 mS.

3/12/18

Special two electrodes

SZ 3320.1 - SZ 3330.1
For high Temperature/Pressure.
Applications: High purity water.
Cell constant SZ 3320.1: K = 0.1 cm^{-1}
Cell constant SZ 3330.1: K = 1 cm^{-1}
Thermocompensator: Pt100
Material in contact with liquids: S. Steel, PEEK L=55 mm
Temperature: 100 °C max.
Pressure: 16 bar max. at 25 °C
Connector: 4-pin
Thread: 3/4" NPT
Cable: SZ927.1 (to be ordered separately)

SZ 3300.1
Graphite Electrodes.
Applications: From 200 µS to 200 mS.
Cell constant: K = 1 cm^{-1}
Thermocompensator: Pt100
Material in contact with liquids: PES-graphite L=55 mm
Temperature: 100 °C max. at 10 bar
Pressure: 16 bar at 25 °C
Connector: 4-pin
Thread: 3/4" NPT
Cable: SZ927.1 (to be ordered separately)

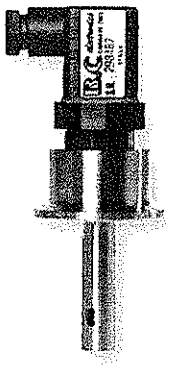

SZ 3350.1 - SZ 3360.1
For high Temperature/Pressure.
Applications: High purity water.
Cell constant SZ 3350.1: K = 0.1 cm^{-1}
Cell constant SZ 3360.1: K = 1 cm^{-1}
Thermocompensator: Pt100
Material in contact with liquids: S. Steel, PEEK L=55 mm
Temperature: 100 °C max.
Pressure: 6 bar max. at 25 °C
Connector: 4-pin
Thread: Tri-Clamp 2"
Cable: SZ927.1 (to be ordered separately)

3/12/18

STV/C

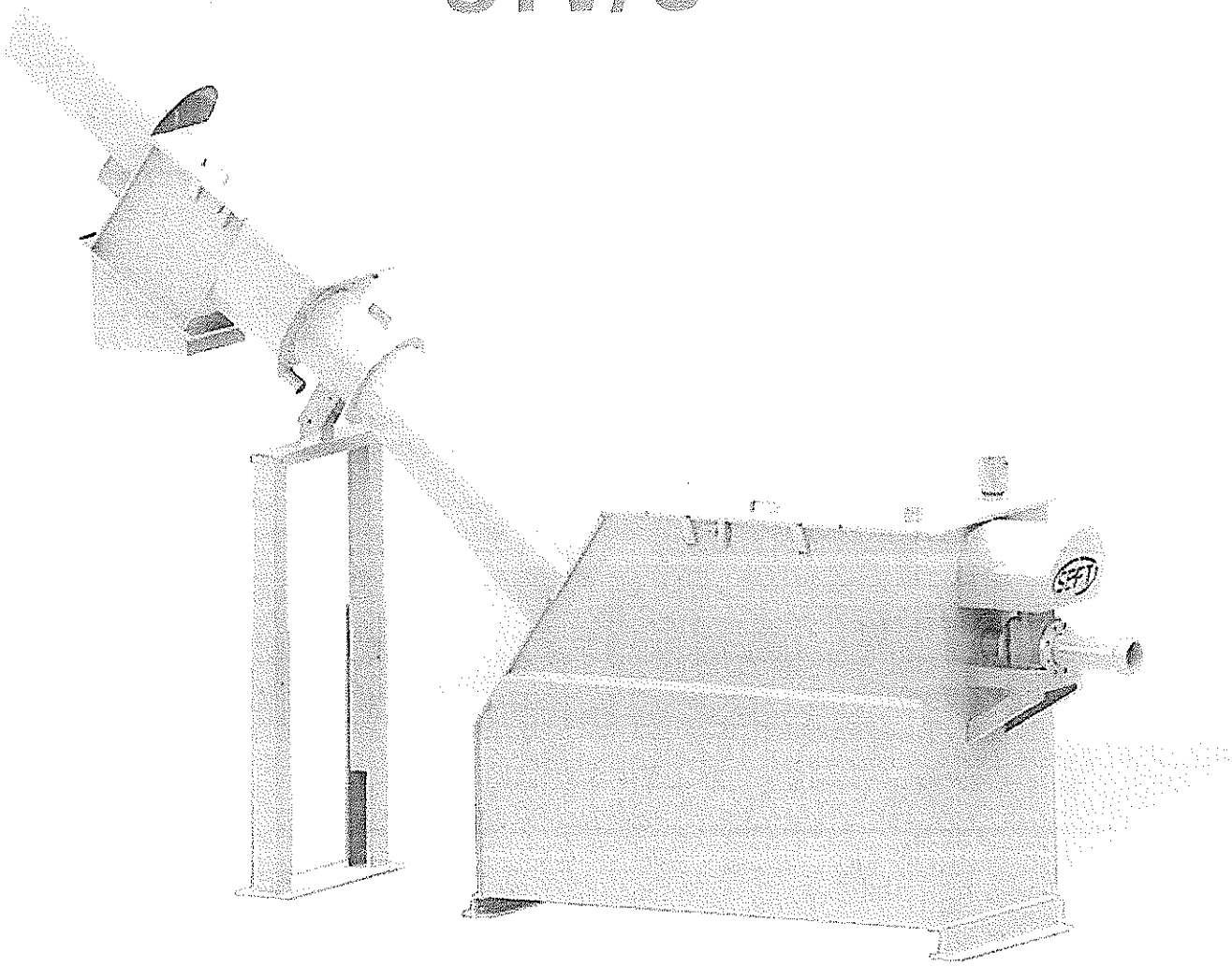

IMPIANTO COMPATTO DI RICEZIONE E TRATTAMENTO BOTTINI

COMPACT PLANT FOR CESSPOOL ACCEPTANCE

l 3/12/18

STV/C

STV/C - IMPIANTO COMPATTO DI RICEZIONE E TRATTAMENTO BOTTINI

L'STV/C è un'unità compatta in grado di effettuare il pretrattamento di grigliatura delle acque reflue derivanti da processi industriali di vario tipo.
Prima che queste vengano immesse negli impianti di depurazione.
L'ingresso è dotato di un attacco rapido tipo "perrot" con valvola elettromeccanica; i reflui, scaricati direttamente dall'autobotte, vengono filtrati da una filtrococlea che rimuove le sostanze solide che poi vengono drenate e compattate e quindi scaricate in un cassone oppure insaccate.

FUNZIONI
- Filtrazione
- Drenaggio/compattazione del solido rimosso

VANTAGGI
- Assenza di odori
- Assenza di occlusioni
- Bassi costi di gestione e manutenzione
- Macchina compatta
- Lavori edili non necessari
- Basso contenuto residuo di materia organica
- Riduzione fino al 40% in volume del solido asportato
- Assenza di pompe

CARATTERISTICHE COSTRUTTIVE

Portata in ingresso	Fino a 100 m³/h
Foratura vaglio	ø 3 ÷ ø 7 mm foro tondo

STV/C - COMPACT PLANT FOR CESSPOOL ACCEPTANCE

STV / C is a unit compact able to carry out the pretreatment of screening of waste water from industrial processes of various types. Before they are released in wastewater treatment plants.
The entrance is equipped with a quick attack (Perrot type) and an electromechanical valve.
The wastewater discharged directly from the tanker, is filtered by a screw screen that removes the solids that are then drained and compacted and then discharged into a bin or bagged.

FEATURES
- *Filtration*
- *Drainage / compaction of the solid removed*

ADVANTAGES
- *No odor*
- *No obstructions*
- *Low operating costs and maintenance*
- *Compact machine*
- *Construction work is not necessary*
- *Low residual content of organic matter*
- *Reduction of up to 40% by volume of the solid removed*
- *No pumps*

MANUFACTURING FEATURES

Inlet flow rate	up to 100 m³/h
Filtering options	ø 3 ÷ ø 7 mm foro holes

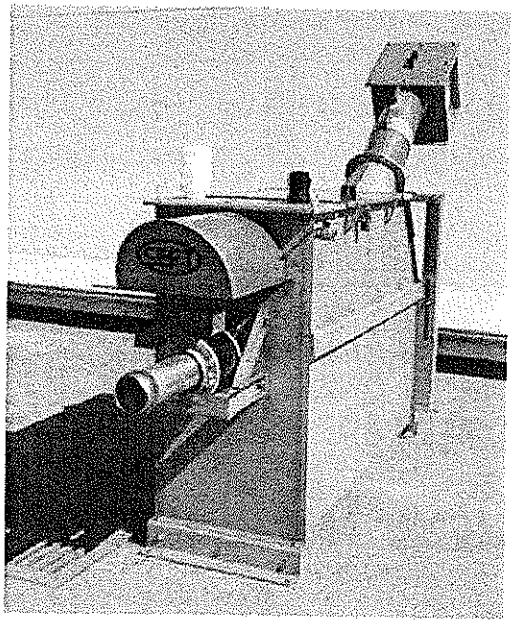

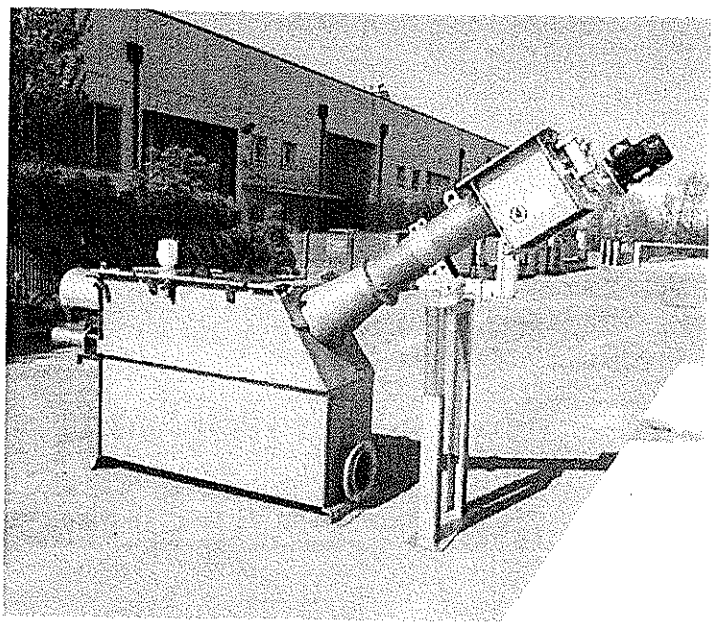

3/12/18

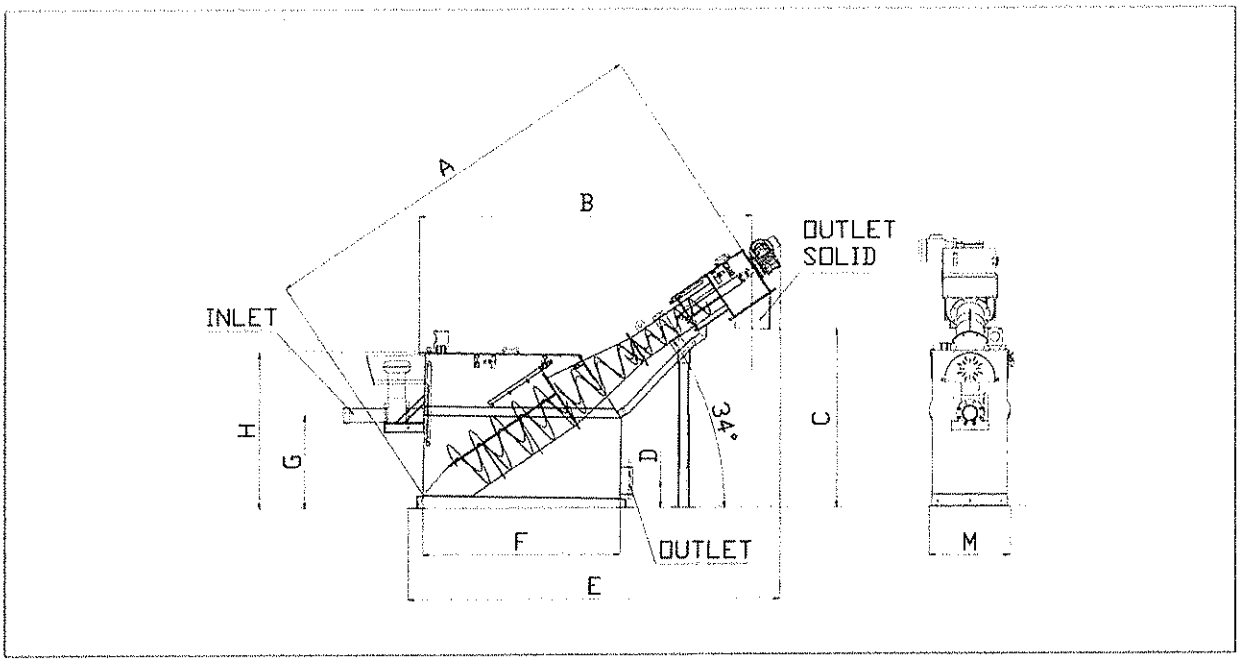

DETTAGLI TECNICI *TECHNICAL DETAILS*

Model	SCREEN	kW SCREEN	kW VALVE	m³/h FLOWRATE	INLET	OUTLET
STV/C 50	FCP 50	1,10	0,18	50	DN 100	DN 200
STV/C 75	FCP 60	0,75	0,18	75	DN 100	DN 200
STV/C 100	FCP 70	0,75	0,18	100	DN 100	DN 200

le motorizzazioni possono variare in base alla configurazione di macchina
based on machine configuration, motor power could be different

i dati in tabella sono teorici
data here listed are theoretical

Model	A	B	C	D	E	F	G	H	ØI	ØL	M	Weight
	mm	mm	mm	mm	mm	mm	mm	mm	mm	mm	mm	Kg
STV/C 50	3550	2800	1500	220	3050	1600	758	1280	219	273	680	630
STV/C 75	4000	3290	1750	220	3750	1750	957	1440	323	323	810	780
STV/C 100	4510	3650	1950	220	4050	2000	1140	1600	323	323	856	940

3/12/19

STV/C

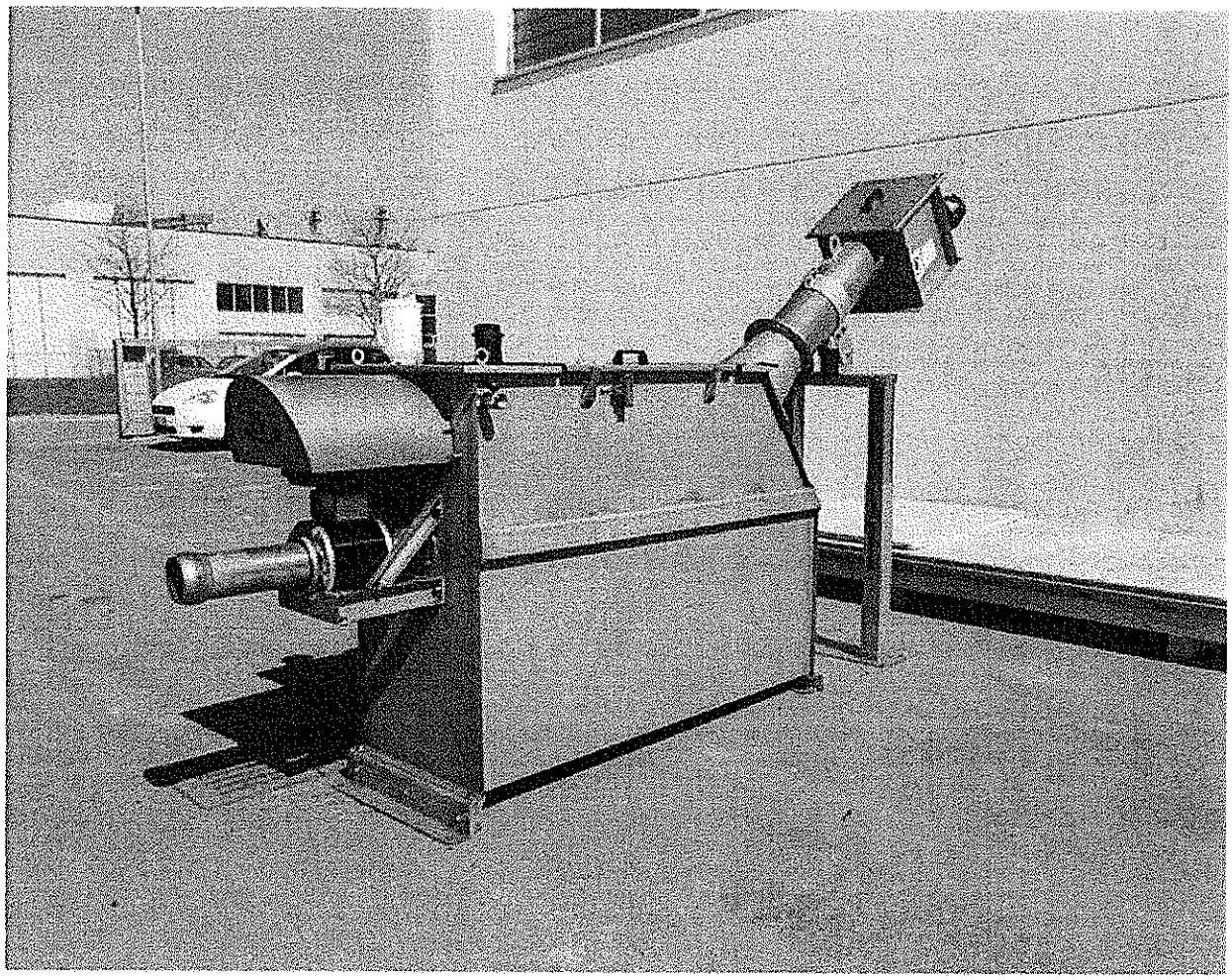

SEFT S.r.l.
Via Aperte, 195 - 41038 San Felice sul Panaro (MO) - Italy
tel. +39 0535 84544 - fax +39 0535 85585
e-mail: seft@seft.it PEC: seftsrl@legalmail.it
www.seft.it

I dati riportati nel presente catalogo non sono impegnativi e possono subire variazioni in qualsiasi momento. *Rights reserved to modify technical specifications.*

3/12/18

STV/C 50 Compact Screening System for Cesspool Acceptance

Inlet Flow : 50 - 60 m3/h.

Screenings weight and volume reduction: up to 40% - 50%

External structure in stainless steel AISI304L
Tank in stainless steel AISI304L
Shaft less spirals in high carbon steel painted RAL 6029
Bolts in A2
Anti-wear material: bolted plates in stainless steel AISI304L

Loading basket diameter: **Ø456 mm**
Screw diameter for transport / compaction: Ø219 mm
Filtration type: rounded holes
Dimension: **Ø 10 mm**
Total length: 3.590 mm (motor excluded)
Discharging height: 1.500 mm from ground level
Inclination: 35°
Rectangular outlet spout for screening discharge 325 x 285 mm
Basket cleaning through nylon bolted brushes
Inlet: alum. DN100 Perrot w/motorized valve (24V)
Outlet: alum. DN200 PN10

Screw:
Motor 1,1 kW, 400V, 50Hz, 3 phases, 4 poles, IP55, F class, 11 rpm, BONFIGLIOLI gear reducer
Valve:
Electric actuator 24V, 50Hz, IP65, I class

Included:
Washing system on compaction zone with manual valve
Washing system on loading zone with manual valve
Washing system on cesspool inlet zone with manual valve
PE breathing valve on screw screen tank
PE pipe for returning liquid of compaction zone
predisposition for rod level sensor
limit-switches for opening hatches
Telescopic support foot in stainless steel AISI 304L
Eyebolts

3/12/09

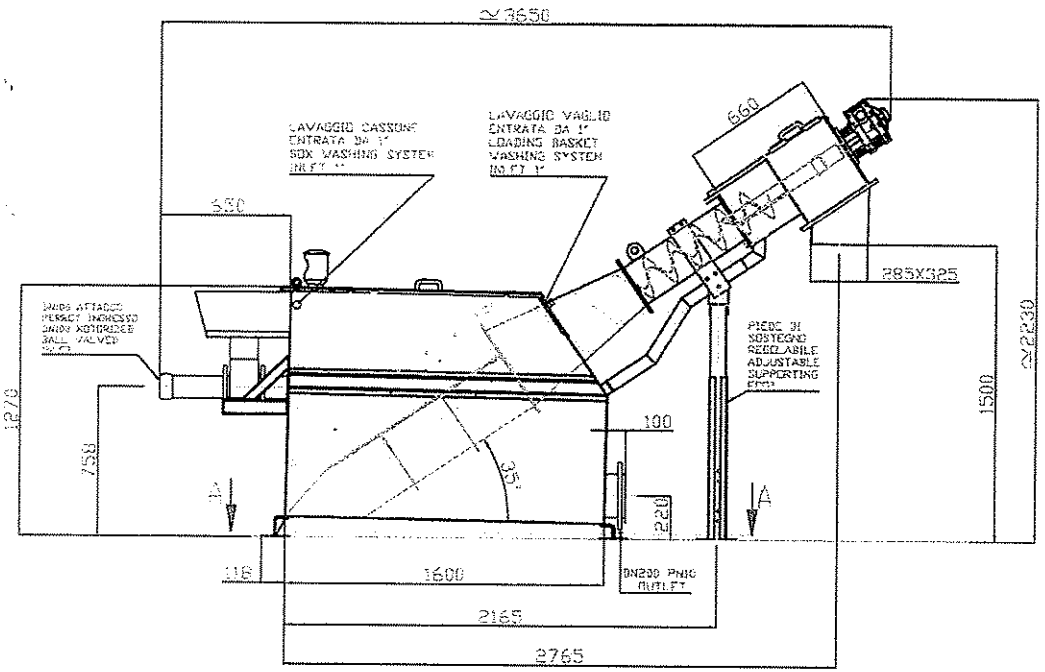

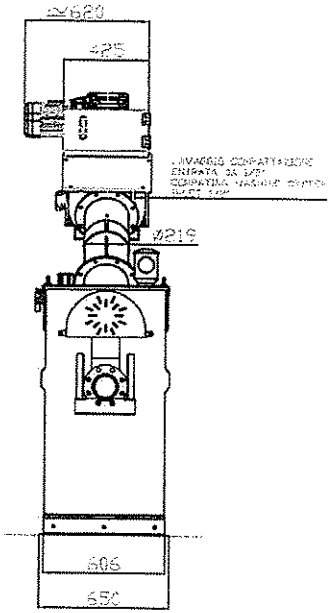

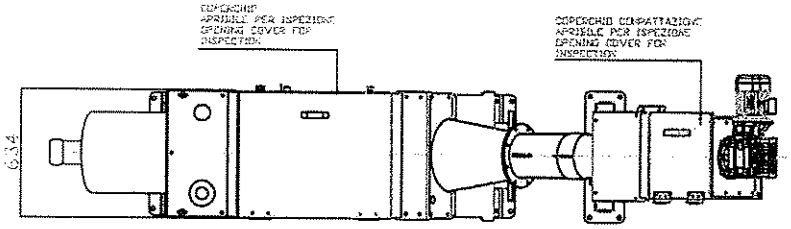

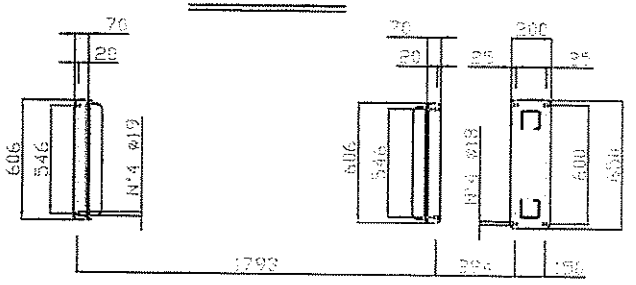

	Grado di Finitura Superficiale:	Materiale: VEDERE OFFERTA / SEE OFFER	Codice Pezzo: STVC50	
Scala: 1:1	Foglio:	Durezza:	Peso: Kg.	Trattamento: / Colore :	Codice Progetto:	
Quote senza indicazione di tolleranza grado di precisione medio secondo UNI EN 22768 fori tolleranza+ / alberi tolleranza -		DENOMINAZIONE: STVC50 INCL.35°			Disegnato da: GUIDO	Data: 04-12-2014
		IMPIANTO COMPATTO DI RICEZIONE E TRATTAMENTO / COMPACT PLANT FOR CESSPOOL ACCEPTANCE			Modificato da:	Data:
					Codice disegno: STVC50	

via Aperta,195
41038 S.F. sul Panaro (Mo)
www.seftit seft@seftit

Questo disegno non puo'essere trasmesso a terzi senza autorizzazione di SEFT srl

Disegno indicativo ai fini commerciali che può essere soggetto a variazioni
Drawing draft for commercial purposes may be subject to change without prior notification

TÜV NORD

CERTIFICATE

Management system as per
EN ISO 9001 : 2008

In accordance with TÜV NORD CERT procedures, it is hereby certified that

SEFT S.r.l.
Via Aperte, 195
41038 San Felice Sul Panaro (MO)
Italy

applies a management system in line with the above standard for the following scope

Design, manufacture and sale of machinery for civil and industrial purification and customised equipments for industrial plants.

Certificate Registration No. 44 100 134722
Audit Report No. IT-14670/2016

Valid from 2016-06-05
Valid until 2018-09-14
Initial certification 2013

Certification Body
at TÜV NORD CERT GmbH

Bologna, 2016-05-27

This certification was conducted in accordance with the TÜV NORD CERT auditing and certification procedures and is subject to regular surveillance audits.

TÜV NORD CERT GmbH Langemarckstraße 20 45141 Essen www.tuev-nord-cert.com

DAkkS
Deutsche
Akkreditierungsstelle
D-ZM-12007-01-01

3/12/16

Mixer data sheet

WILO SE, Werk Hof
Heimgartenstraße 1-3
Postfach 3309 - D-95030 Hof/Saale
T: +49 9281 974-540 F: +49 9281 974-133
ctwwt@wilo.com www.wilo.com

ID	17-ORH-GR-AB-1-0001
Project country	Greece
Project name	WWTP MONDENEGRO
Position	1 Anoxic tank
Date	2017-09-05
Enquiry	

Data for selection

Mixed liquid

Kind	Activated sludge	
Density	1000	kg/m³
pH value	7	
Temperature	20	°C
Dry solids content	0,5	%
Flow behaviour	Newton flow	
Kind of thickening	None	
Additional thickener	No	

Solids

Origin	Not determined	
Kind	Not determined	
Solid size	Not determined	

Mixing task

Operating mode	Continuous	
Mixing task	Suspend	
Average calculated flow velocity[1]	0,3	m/s

Tank

Material	Concrete	
Outlet	On bottom, laterally at the tank edge	
Tank shape	Rectangular tank	
Tank volume	34,8	m³
Vertical / inclined walls	Tank with vertical walls	
Length on upper edge	4	m
Width on upper edge	3	m
Tank height	2,9	m
Maximum filling level	2,9	m
Minimum filling level	2,9	m
Relevant filling level	2,9	m

Preparation

Preparation	Screen with gap width < 10 mm, but no pre-clarification

3/12/18

WILO SE, Werk Hof
Heimgartenstraße 1-3
Postfach 3309 - D-95030 Hof/Saale
T: +49 9281 974-540 F: +49 9281 974-133
ctwwt@wilo.com www.wilo.com

ID	17-ORH-GR-AB-1-0001
Project country	Greece
Project name	WWTP MONDENEGRO
Position	1 Anoxic tank
Date	2017-09-05
Enquiry	

Aeration

Kind	Without

Tank particularities

Default

Remarks regarding the selection process

The mixing result depends on the functional quality of the plant equipment in the mechanical treatment stage (preliminary treatment). Mineral fractions (grit and sand) must be always excluded from the process and cannot be kept in suspension. It is absolutely required to check the values mentioned above with the actual values on site.

3/12/18

WILO SE, Werk Hof
Heimgartenstraße 1-3
Postfach 3309 - D-95030 Hof/Saale
T: +49 9281 974-540 F: +49 9281 974-133
ctwwt@wilo.com www.wilo.com

ID	17-ORH-GR-AB-1-0001
Project country	Greece
Project name	WWTP MONDENEGRO
Position	1 Anoxic tank
Date	2017-09-05
Enquiry	

Selection of submersible mixers

Proposal

Type		TR 21.145-4/11 S14	
Quantity		1	
Frequency		50	Hz
Rated power		1,3	kW
Propeller speed		1390	1/min
Power factor (ISO 21630)		200	N/kW
Propeller diameter		0,21	m
Maximum power input		1,74	kW
Power input in duty point	[*1]	1,2	kW
System-dependent power input	[*2]	1,2	kW
Power density	[*3]	34,5	W/m³
System-dependent power density	[*4]	34,5	W/m³
Distance to water surface		0,2	m

[*1] Measurement at static thrust acc. to ISO 21630 (inflow velocity ~0, Open Sea conditions).
[*2] The power consumption of the mixer will be reduced in proportion to the flow velocity which is generated in the tank.
[*3] According to ISO 21630.
[*4] According to site conditions.

Important note

Installation of the mixer(s) according to installation sketch. Before installing the mixers, the up-to-date tank plans must be submitted without previous request to WILO SE, Hof for revision.

To guarantee a continuous operation, the minimum water cover above the propeller specified by WILO must be ensured.
Please check if our basic data are identical to your application and, if necessary, inform us in writing about modifications/objections.
The aforementioned mixer(s) selection data are integral part of our warranty, whereas our warranty comes only into effect, when the submersible mixers are installed according to our recommendation. Because the overall function depends considerably on the correct positioning of the submersible mixers, we will not accept any warranty claims which result from positioning which we did not approve explicitly. Also zones of weak flow due to the tank geometry are not part of our warranty. The values of maximum power input, power input in the duty point and energy density are valid for clean water. Furthermore the use of our submersible mixers in patented procedures or under trade mark rights of third parties is excluded from our liability.

[1]In case of rectangular or round tanks the average flow velocity above the tank section cannot be guaranteed.
For the selected tank shape no directed circulating flow can be generated for physical reasons. The calculated average flow velocity refers only to an undirected turbulent flow.

All attached notes relating to the product and the selection are part of the technical selection of WILO SE.

3/12/18

Installation proposal

WILO SE, Werk Hof
Heimgartenstraße 1-3
Postfach 3309 - D-95030 Hof/Saale
T: +49 9281 974-540 F: +49 9281 974-133
ctwwt@wilo.com www.wilo.com

ID	17-ORH-GR-AB-1-0001
Project country	Greece
Project name	WWTP MONDENEGRO
Position	1 Anoxic tank
Date	2017-09-05
Mixer	TR 21.145-4/11 S14
Enquiry	

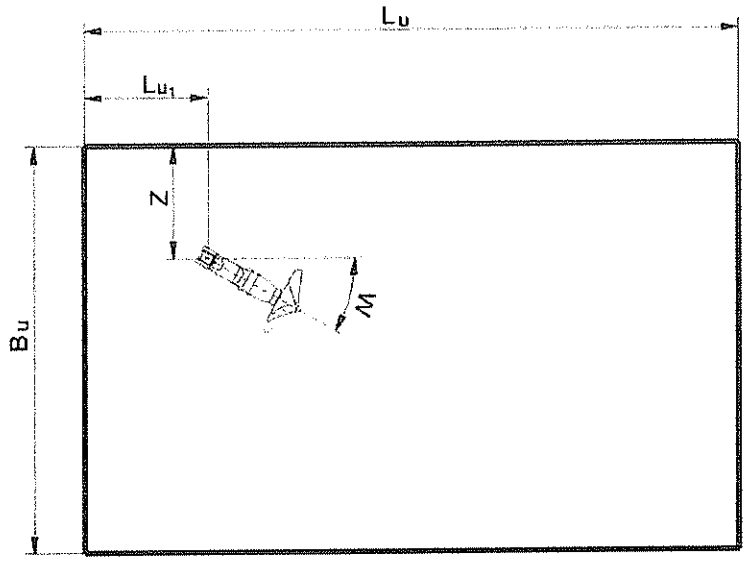

Installation recommendation regarding to miscellaneous minimum distances

n *	1	
Bu	3	m
Z	0,4	m
NI *	1	

Lu	4	m
Lu1	1	m
W	30	°

* n = no. of mixer per tank, NI = no. of installation positions per tank

3/12/18

WILO SE, Werk Hof
Heimgartenstraße 1-3
Postfach 3309 - D-95030 Hof/Saale
T: +49 9281 974-540 F: +49 9281 974-133
ctwwt@wilo.com www.wilo.com

ID	17-ORH-GR-AB-1-0001
Project country	Greece
Project name	WWTP MONDENEGRO
Position	1 Anoxic tank
Date	2017-09-05
Mixer	TR 21.145-4/11 S14
Enquiry	

Hints

The enclosed installation proposal is a schematic drawing and not according to scale. It serves as orientation guide. In case of order, the feasibility of this installation has to be matched with the tank drawing and the actual conditions. If there is an inflow and/or outflow in the immediate vicinity of the mixer, the mixer position must be checked based on updated tank plans to avoid bad influences on the mixer and short-circuit flows.

23/12/18

Abmessungen für Tauchmotorrührwerk
MINIPROP TR 21

Dimensions of Submersible mixer **MINIPROP TR 21**

Dimensions du circulateur immergé **MINIPROP TR 21**

wilo
Heimgartenstraße 1-3 D-95030 Hof/Saale
Telefon +49 9281 974-0 Fax +49 9281 96528
www.wilo.com E-Mail: info@wilo.com

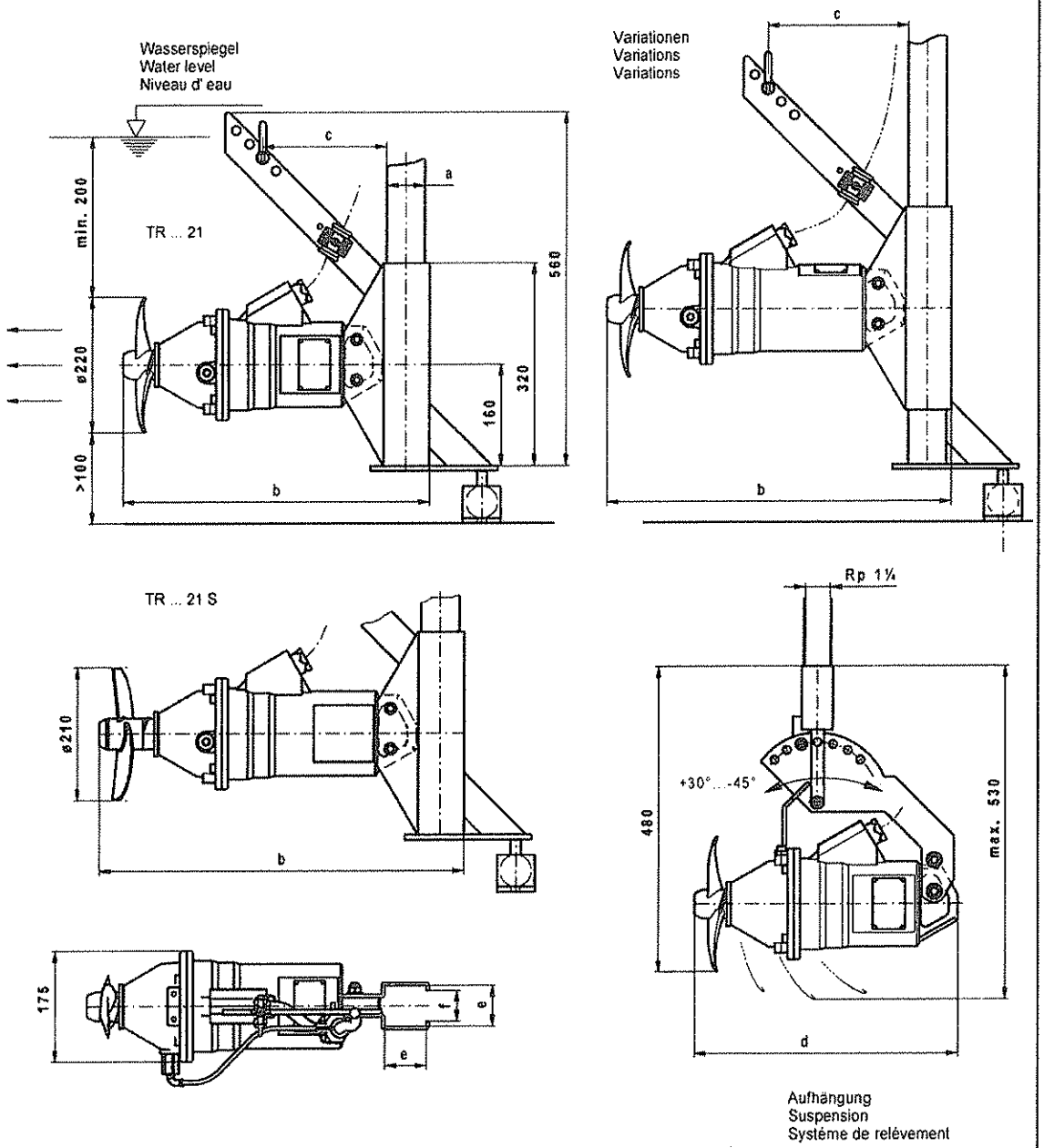

Motor / Motor type/ Type de moteur	T12G-4/6			T12G-4/11		
Gestänge-Gr./ Size of pipes / Dimension du tube	a = 60x60	a = 50x50	Suspension	a = 60x60	a = 50x50	Suspension
b	490/525*	460/515*		545/580*	535/570*	
c	200	200		220	220	
d			415/450*			470/505*
e	64	54		64	54	
f	40	32		40	32	
Gewicht / Weight / Poids	max. 32kg/35kg*			max. 37kg/40kg*		

* mit Stahlpropeller
with steel propeller
avec hélice en acier

Maßstab: 1:10 Technische Änderungen vorbehalten - Technical changes reserved - Modifications techniques réservées

Datum: 02.06.14 NP Mb015.prt

Q 3/12/19

CERTIFICATE

This is to certify that

WILO SE

Nortkirchenstraße 100
44263 Dortmund
Germany

with the organizational units/sites as listed in the annex

has implemented and maintains a **Quality Management System**.

Scope:
Development, manufacture, sales and service of pumps and pump systems for Building Services, Water Management and Industry.

Through an audit, documented in a report, it was verified that the management system fulfills the requirements of the following standard:

ISO 9001 : 2008

Certificate registration no.	060313 QM08
Date of revision	2016-04-24
Valid from	2015-04-30
Valid until	2018-04-29
Date of certification	2015-04-30

DAkkS
Deutsche
Akkreditierungsstelle
D-ZM-16074-01-00

DQS GmbH

G. Blechschmidt

Götz Blechschmidt
Managing Director

3/12/18

Annex to Certificate
Registration No. 060313 QM08

WILO SE

Nortkirchenstraße 100
44263 Dortmund
Germany

Location	Scope
522452 **WILO SE** **Felicitasstraße 5** **44263 Dortmund** **Germany**	Development, manufacture, sales and service of pumps and pump systems for Building Services, Water Management and Industry.
522453 **WILO SE** **Strümpenbusch 3** **44357 Dortmund** **Germany**	Development, manufacture, sales and service of pumps and pump systems for Building Services, Water Management and Industry.
283115 **WILO SE** **Heimgartenstraße 1-3** **95030 Hof** **Germany**	Development, Manufacture, Sales and Service of: -pumps and electrical motors for water supply, lowering of water level and booster plants -pumps and electrical motors for sewage disposal and treatment -pumps and electrical motors for drainage of pits, sumps, building sites and so on -submersible mixers and electrical motors for flow generation or for mixing of liquids for communal or industrial applications -technical equipment for sewage treatment plants, digester gas plants, waterworks and pumping stations
070047 **WILO SE** **Anderslebener Straße 161** **39387 Oschersleben** **Germany**	Development and manufacture of pumps and pump systems for Building Services, Water Management and Industry.
521114 **WILO INTEC SAS** **50, avenue Eugene Casella** **18700 Aubigny-sur-Nère** **France**	Design, manufacturing and sales of circulators and hydraulic units for Heating Ventilation Air Conditioning industry.

3/12/19

Annex to Certificate
Registration No. 060313 QM08

WILO SE

Nortkirchenstraße 100
44263 Dortmund
Germany

Location	Scope
527816 **WILO INTEC SAS organizačná zložka** **Slovakia** **Zlatovská 2193/33** **91105 Trenčin** **Slovakia**	Manufacturing of circulators for Heating Ventilation Air Conditioning industry.
520706 **Wilo Salmson France SAS** **80 boulevard de l'Industrie** **CS 90527** **53005 Laval Cedex** **France**	Development, manufacture, sales and service of pumps and pump systems for Building Services, Water Management an Industry.
522448 **Wilo Salmson France SAS** **ZA Autoroutière 1005 bd de la Communication** **53950 Louverné** **France**	Development, manufacture, sales and service of pumps and pump systems for Building Services, Water Management an Industry.
521111 **Wilo Salmson France SAS** **30, rue du 35e Regiment d'Aviation** **69673 Bron** **France**	Development, manufacture, sales and service of pumps and pump systems for Building Services, Water Management an Industry.
520707 **Wilo Salmson France SAS** **53, boulevard de la République Espace Lumière, Bât. 6** **78400 Chatou** **France**	Development, manufacture, sales and service of pumps and pump systems for Building Services, Water Management and Industry.

Q 3/12/18

Annex to Certificate
Registration No. 060313 QM08

WILO SE

Nortkirchenstraße 100
44263 Dortmund
Germany

Location	Scope
521112 **WILO Pumps Ltd.** **Unit B1 Corcanree Business Park** **Dock Road** **Limerick** **Ireland**	Manufacture of pumps for Building Services.
521113 **STEMMA S.R.L.** **via postale VECCHIA, 20** **36070 Trissino.VI** **Italy**	Manufacture of stainless steel components for pumps and Technical products.
520708 **WILO China Ltd.** **No. 10 Zhaofeng 2nd Street, Zhaofeng Industrial Zone,** **Zhaoquanying, Shunyi District,** **101300 Beijing** **China**	Manufacturing, Sales and After Sales Service of Pumps, Pump Systems and Pump Systems Piece Parts including Control Box for Building, Municipalities, Industry and Agriculture
522450 **WILO China Ltd.** **No.285 Qinhuang West Street,** **Qinhuangdao Economic & Technological Development Zone** **066004 Qinhuangdao, Hebei Province** **China**	Manufacturing, of Pumps for Building, Industry and Agriculture
521117 **WILO ELEC CO. LTD.** **No.285 Qinhuang West Street,** **Qinhuangdao Economic & Technological Development Zone** **066004 Qinhuangdao, Hebei Province** **China**	Research, Design and Production of AC Motors for Pumps

Q 3/12/18

Annex to Certificate
Registration No. 060313 QM08

WILO SE

Nortkirchenstraße 100
44263 Dortmund
Germany

Location	Scope
521118 **Wilo Mather and Platt Pumps Private Limited** **S. No. 162,** **Mumbai - Pune Road,** **Chinchwad** **Pune 411 019** **India**	Design, development, manufacture, installation and servicing of centrifugal pumps/pump sets and valves and contracts of pumping system on turnkey basis.
521120 **Wilo Mather and Platt Pumps Private Limited** **Sales** **Sales office, 201to 206,** **Premier Plaza,** **Mumbai - Pune Road,** **Chinchwad** **Pune 411 019** **India**	Design, development, manufacture, installation and servicing of centrifugal pumps/pump sets and valves and contracts of pumping system on turnkey basis.
521119 **Wilo Mather and Platt Pumps Private Limited** **E 25, MIDC,** **Gokul Shirgaon Industrial Area** **Kolhapur 416234** **India**	Design, development, manufacture, installation and servicing of centrifugal pumps/pump sets and valves and contracts of pumping system on turnkey basis.
521116 **WILO Pumps Limited** **46 Mieumsandan 1-ro** **Gangseo-gu** **Busan 618-220** **South Korea**	Design, development, manufacture, sales and service of pumps and pump systems

This annex (edition: 2016-04-24) is only valid in connection with the above-mentioned certificate.

3/12/18

Annex to Certificate
Registration No. 060313 QM08

WILO SE

Nortkirchenstraße 100
44263 Dortmund
Germany

Location	Scope
514915 **WILO Pompa Sistemleri A.Ş.** **Orhanli Mah.** **Mehmet Akif Ersoy Cad. No 91** **Tuzla** **34956 Istanbul** **Turkey**	Sales, Service of Pumps & Pump Systems and Development, Assembly of Pump Systems for Building Services, Water Management and Industry
501447 **WILO Pumpen Österreich GmbH** **WILO Straße 1** **2351 Wiener Neudorf** **Austria**	Sales and service of pumps and pump systems for Building Services, Water Management and Industry.
516442 **WILO nv** **Rusatiralaan 2** **1083 Ganshoren** **Belgium**	Sales and service of pumps and pump systems for Building Services, Water Management and Industry.
522451 **Wilo Polska Sp. z o.o.** **Jedności 5** **05-506 Lesznowola** **Poland**	Implementation to the market, sale and service of pumps, pump systems for heating, ventilation, air conditioning, water supply and sanitary engineering
518368 **WILO Nordic AB** **Isbjörnsvägen 6** **35245 Växjö** **Sweden**	Sales and service of pumps and pump systems for Building Services, Water Management and Industry.
525082 **WILO Magyarország Kft.** **Torbágy u. 14** **2045 Törökbálint** **Hungary**	Sales and service of pumps and pump systems for Building Services, Water Management and Industry.

This annex (edition: 2016-04-24) is only valid in connection with the above-mentioned certificate.

Q 3/12/18

WILO HELLAS ABEE
ΑΓΙΟΥ ΑΘΑΝΑΣΙΟΥ 80
145 69 ΑΝΟΙΞΗ – ΑΤΤΙΚΗΣ
ΕΛΛΑΔΑ

T. +30 210 6248 0
F. +30 210 6248 360
wilo.info@wilo.gr
www.wilo.gr

wilo

REFERENCE LIST WITH SEWAGE PUMPS & MIXERS WILO

1	WWTP LAMIA
2	WWTP ORESTIADA
3	WWTP ALEXANDROUPOLIS
4	WWTP SERRES
5	WWTP KATERINI
6	WWTP LIMASOL (CYPRUS)
7	WWTP KIMOLOS
8	WWTP MILITARY PLANTS / N. SANDA, KILKIS
9	WWTP FILIPPIADA
10	WWTP KALAMBAKA
11	WWTP KAVALA
12	WWTP KASPAKAS-KORNOS / LEMNOS
13	WWTP METHYMNA LESVOS
14	WWTP INDUSRIAL AREA PATRAS
15	WWTP LOUTRA LESVOS
16	WWTP LOUTRA KYTHIRA
17	WWTP LOUTRA KIMI
18	WWTP WOOD INDUSTRY "ALPHA WOOD"
19	WWTP SAMOTHRAKI
20	WWTP PLATYS GIALOS, SIFNOS
21	WWTP MUNICIPALITY NESTOR MESSINIA
22	WWTP ASTAKOS
23	SEWAGE PS OF ATHENS WM FACILITY MANAGEMENT OPERATOR, FREATIS PL. PIREUS
24	SEWAGE PS OF ATHENS WM FACILITY MANAGEMENT OPERATOR, ALIMOS
25	SEWAGE PS OF ATHENS WM FACILITY MANAGEMENT OPERATOR, MOSCHATO, PIREUS
26	SEWAGE PS OF ATHENS WM FACILITY MANAGEMENT OPERATOR, VOULA
27	SEWAGE PS KOILA-EXOHI-KARDIA, KOZANI
28	CENTRAL SEWAGE PS FILYRON
29	SEWAGE PS OF LARISA WM FACILITY MANAGEMENT OPERATOR, TRANSPORT PS TO THE WWTP
30	SEWAGE PS OF KAVALA WM FACILITY MANAGEMENT OPERATOR, TRANSPORT PS TO THE WWTP
31	SEWAGE PS MARMARI EVOIA
32	SEWAGE PS ALIVERI EVOIA
33	SEWAGE PS FIRA SANTORINI
34	SEWAGE PS OIA SANTORINI
35	SEWAGE PS HERSONISOS / CRETE
36	SEWAGE PS ASTAKOS / ETOLOAKARNANIA
37	SEWAGE PS HERACLEION / CRETE

WILO HELLAS ABEE
ΑΓΙΟΥ ΑΘΑΝΑΣΙΟΥ 80
145 69 ΑΝΟΙΞΗ – ΑΤΤΙΚΗΣ
ΕΛΛΑΔΑ

Τ. +30 210 6248 0
F. +30 210 6248 360
wilo.info@wilo.gr
www.wilo.gr

wilo

REFERENCE LIST WITH SEWAGE PUMPS & MIXERS WILO

38	CENTRAL SEWAGE PS NAFPAKTOS
39	SEWAGE PS MUNIC. KIMMERIA / XANTHI
40	SEWAGE PS PETRA, LESVOS
41	SEWAGE PS MUNICIPALITIES HANIA, CRETE
42	CENTRAL SEWAGE PS EPIDAUROS
43	CENTRAL SEWAGE PS KAMPOHORIA, HIOS
44	SEWAGE PS PALIO, KAVALA
45	SEWAGE PS N. PERAMOS, KAVALA
46	SEWAGE PS RHODOS
47	SEWAGE PS GASTOUNI & VARTHOLOMIO
48	LANDFIL NAFPAKTOS
49	LANDFIL EDESSA
50	LANDFIL ARTA
51	SEWAGE PS OF CENTRAL SEWAGE COLLECTING NETWORK, EDESSA
52	CENTRAL SEWAGE PS KASPAKAS & KORNOS, LEMNOS
53	SEWAGE PS TINOS
54	WWTP AGRICULTURAL COOPERATIVE OF KALAVRYTA
55	CENTRAL SEWAGE PS LIMENAS, THASOS
56	CHEMICAL WW PS OF THE CENTRAL HOSPITAL ALEXANDROUPOLIS
57	SEWAGE PS ALEXANDROUPOLIS
58	SEWAGE PS EDIPSOS
59	SEWAGE PS AT THE FACTORY "SOJA HELLAS S.A.", EVOIA
60	WW PS OF THE CENTRAL MILITARY HOSPITAL 424 THESSALONIKI
61	SEWAGE PS RESIDENTIAL GROUP MICHAILIDES, CRETE
62	SEWAGE PS RESIDENTIAL GROUP DASKALOPOULOS, ATHENS
63	CENTRAL SEWAGE PS PHILIPPI, KAVALA
64	ATHENS AIRPORT "EL. VENIZELOS" - CHEMICAL WW PS
65	WATER DAM PANAGIOTIKO, MAGNESIA
66	SEWAGE AND STORM WATER PS AT THE SOUTH ATHENS SUBURBS METRO STATIONS
67	SEWAGE MIXERS AT THE TANNERIES WWTP OF THESSALONIKI
68	SEWAGE PS OF ELEFTHERES WM FACILITY MANAGEMENT OPERATOR, TRANSPORT PS TO THE WWTP
69	ELEFTHERIOS VENIZELOS INTERNATIONAL AIRPORT - PS OF WASTE CHEMICAL NEUTRALIZATION
70	SEWAGE PS OF ETHEL DEPOT - RENTIS
71	SEWAGE PS VATERO KOZANIS
72	SEWAGE PS TITHOREA FTHIOTIDAS
73	WWTP INDUSTRIAL AREA DRAMAS
74	WWTP SKYROS

WILO HELLAS ABEE
ΑΓΙΟΥ ΑΘΑΝΑΣΙΟΥ 80
145 69 ΑΝΟΙΞΗ – ΑΤΤΙΚΗΣ
ΕΛΛΑΔΑ

T. +30 210 6248 300
F. +30 210 6248 360
wilo.info@wilo.gr
www.wilo.gr

wilo

REFERENCE LIST WITH SEWAGE PUMPS & MIXERS WILO

75	SEWAGE PS LAVRION ATTICA
76	SEWAGE PS AS1 & AS3 OF RHODES INTERNATIONAL AIRPORT
77	WWTP ELLOMENOU LEFKADAS (FILTER PUMPS)
78	CANAL LINING OF LOUROS AITOLOAKARNANIA
79	WWTP OF ELVAL INDUSTRY
80	DRAINAGE & SEWAGE PS OF SCHINIAS JUDICIAL OFFICIALS SETTLEMENT
81	LANDFIL PERA GALINA
82	SEWAGE PS O-A2 & B1 CAPITAL OF ANDROS
83	SEWAGE PS SA-1 & SA-2 SIGRI LESVOS
84	WWTP ERATINH
85	WWTP ALIVERI
86	DRAINAGE PS RAGIOU - KESTRINIS THESPROTIAS
87	WWTP ETVA VIPE -PATRAS
88	SEWAGE PS NEA PERAMOS ATTIKA
89	LANDFIL KOZANI 3rd CELL
90	SEWAGE PS EMPORIOU THIRAS
91	SEWAGE PS DROSIA PREVEZA
92	SEWAGE PS PANORAMA-POLICHNI SALONICA
93	SEWAGE PS AGIOS THOMAS LARISA
94	WWTP ETVA VIPE KOMOTINI
95	WWTP OF CAMPING AT GITHIO
96	DRAINAGE PS RAGIOU - KESTRINIS THESPROTIAS - AGIONAZI
97	SEWAGE PS LEFKAKIA NAFPLION
98	SEWAGE PS AGIA PARASKEVI LESVOS (PS NAPIS & PS VIOKA)
99	LANDFIL XYLOKASTRO
100	SEWAGE PS A0, A1, A1.1, A2 LOUROS PREVEZAS
101	SEWAGE PS NEAPOLI AGRINIO
102	WWTP PELLANAS
103	SEWAGE PS AVRAMIOU-LEFKOHORAS
104	SEWAGE PS AGATHOUPOLIS & NEAS METHONIS
105	WWTP ARKALOCHORI CRETA
106	SEWAGE PS OF KLADA, KOKKINORACHI & AFYSSOS SETLEMENTS - SPARTI MUNICIPALITY
107	SEWAGE PS ETOLIKO ETOLOAKARNANIAS (RENNOVATION)
108	SEWAGE PS KALESA OF MALEVYZI MUNICIPALITY HERAKLIO CRETA
109	SEWAGE PS MAROULAS SETTLEMENT - RETHIMNO MUNICIPALITY
110	WASTE BURIAL (XTA) RESTORATION OF KALAMAKI TAGARADES AREA - THERMI MUNICIPALITY SALONICA - PHASE C'

WILO HELLAS ABEE
ΑΓΙΟΥ ΑΘΑΝΑΣΙΟΥ 80
145 69 ΑΝΟΙΞΗ – ΑΤΤΙΚΗΣ
ΕΛΛΑΔΑ

T. +30 210 6248 300
F. +30 210 6248 360
wilo.info@wilo.gr
www.wilo.gr

wilo

REFERENCE LIST WITH SEWAGE PUMPS & MIXERS WILO

111	SEWAGE PS OF ROMA SETTLEMENT AT ALIVERI NEA IONIA VOLOS
112	SEWAGE PS OF STYLIDA
113	LANDFIL KOMOTINI
114	SEWAGE PS AKROTIRI THIRA
115	SEWAGE PS ACHARAVI-RODA THINALIA CORFU MUNICIPALITY
116	SEWAGE P.S. VRONTOU-KARITSA - DION MUNICIPALITY- PIERIA REGION
117	SEWAGE PS RODITI KOMOTINIS
118	WWTP CHORA ANDROS
119	WWTP OF MYKONOS HELLENIC AIRFORCE 6th MSEP
120	EPANOMI SALONICA SEWAGE DISPOSAL
121	WWTP MIKI RODOPI SETTLEMENT (PORTABLE PUMPS)
122	SEWAGE PS ALIARTOS VIOTIAS
123	SEWAGE PS POROS OF KEFALLONIA MUNICIPALITY
124	WWTP KALLIRACHI THASOS
125	SEWAGE PS AGIOS KONSTANTINOS SETTLEMENT - LAVRION ATTICA
126	SEWAGE & DRAINAGE PS NEAS OUTALIS OF LEMNOS (COMPLETION)
127	SEWAGE PS OF PERISSA SETTLEMENT - PERIVOLOU AREA OF THIRA
128	IMPROVEMENT & MODERNIZATION OF KASTORIA NEAR LAKE SEWAGE PS
129	WWTP STRATONI CHALKIDIKI
130	SEWAGE PS OF CHRISOCHORI, ERATEINOU, GRAVOUNA WITH VACUUM SYSTEM
131	WWTP NEAPOLI LAKONIAS
132	SEWAGE PS PALAIOELEFTHROCHORIOU OF PIDNA-KOLINDROS MUNICIPALITY
133	WWTP NEA KOUTALI LEMNOS
134	SEWAGE PUMPING STATIONS OF PLATANAKIA, AGIOS SPYRIDON, KONTARIOTISSA, NEA EFESSOS, DION MUNICIPALITY
135	PORTABLE SEWAGE PUMP WWTP ALEXANDROUPOLIS
136	INTERNAL SEWAGE NETWORK OF XAMOUDOCHORI-VLACHERNIOTISSA SETTLEMENTS, CONNECTION WITH MAIN PIPE OF DEYAVA
137	ENLARGEMENT OF NESTOS MUNICIPALITY WWTP
138	PS CLOSE TO K.A.P.I. KOLCHIKOU, LAGADAS MUNICIPALITY
139	SEWAGE NETWORK OF SYKARAKI, ALESIA, KOZI, KALAMI, GOUNARI SETTLEMENTS, SPARTI MUNICIPALITY AND CONNECTION WITH THE EXISTING NETWORK
140	IMPROVEMENT OF LINDOS RHODES WWTP
141	MODERNIZATION OF 2 SEWAGE P.S. AT PETRA LESVOS
142	PHASE B' OF TRIKALA LANDFILL
143	RESTORATION OF WASTE DISPOSAL SITE AT POSITION OUTZA-LEMONOU, LESVOS MUNICIPALITY
144	SEWAGE DISPOSAL (INTERNAL SEWAGE NETWORK OF MYRSINI SETTLEMENT)

WILO HELLAS ABEE
ΑΓΙΟΥ ΑΘΑΝΑΣΙΟΥ 80
145 69 ΑΝΟΙΞΗ – ΑΤΤΙΚΗΣ
ΕΛΛΑΔΑ

Τ. +30 210 6248 300
F. +30 210 6248 360
wilo.info@wilo.gr
www.wilo.gr

wilo

REFERENCE LIST WITH SEWAGE PUMPS & MIXERS WILO

145	SEWAGE NETWORK OF ARMENOI, KOUMOI, FOTEINO, SAINT GEORGE, KASTELLO SOMATA, CHROMONASTIRI, ROUSSOSPITO, MYLOI SETTLEMENTS OF RETHIMNO MUNICIPALITY
146	SEWAGE DISPOSAL OF PARGA THESPROTIAS SETTLEMENETS
147	RENOVATION OF ORMYLIA WWTP
148	WWTP OLYMPIADA CHALKIDIKI
149	WWTP REPLACEMENT OF ELEFTHEROUPOLI
150	REHABILITATION OF SIX WASTE DISPOSAL SITES AT PELLA REGION
151	WWTP OF PIGADIA KARPATHOS & UNDERSEA DISPOSAL PIPE
152	WWTP OF THIRASIA ISLAND
153	DRAINAGE OF ARCHAEOLOGICAL SITE IN ACHINOS FTHIOTIDAS
154	SEWAGE COLLECTION, TRANSPORTATION AND PROCESSING AT WWTP AMALIADAS OF ILIDA SETTLEMENTS
155	SEWAGE PUMPING STATION AT PORT OF RAFINA
156	WWTP CHALKIS EVIA
157	COMPLETION OF DREPANO ARGOLIS SEWAGE DISPOSAL
158	COMPLETION OF SEWAGE DISPOSAL NETWORK AT NEAR LAKE TRICHONIDA SETTLEMENTS
159	RENOVATION OF PLOMARI LESVOS SEWAGE P.S.
160	SEWAGE PS FLESSAS SKIATHOS

Έργο: Ημερ/νία: 2017-09-06
Αριθμός Έργου: Συντάκτης:

wilo

Τεχνικά στοιχεία

Υποβρύχια αντλία λυμάτων Rexa PRO V06 DA-623 / EAD1X4-T0015-540-O

Αντλία							
Τύπος αντλίας		PROV06 D A - 623		Είδος εγκατάστασης		Suspension device DN65	
Πτερωτή (διάμ.)	Μέγ. Δυνατή	135	mm			DN65/2RK	
	Τυπικό (βασικό)	135	mm	Ελεύθερο πέρασμα		65	mm
	Σχεδιασμ.	135	mm	Στόμιο αναρ.	Βαθμ. PN	PN10	
	Ελάχ. Δυνατή	135	mm		Ονομ. διάμ.	DN65	
Ονομαστ. αριθμός στροφών		1450	1/min		Πρότυπο	WILO-S	
Συχνότητα		50	Hz	Στόμιο κατάθλ.	Βαθμ. PN	PN10	
Τύπος πτερωτής		Πτερωτή Vortex			Ονομ. διάμ.	DN65, DN80, Size 2.5, Size 3	
Κατασκευή πτερωτής		Ανοικτό			Πρότυπο	WILO-D	

Βάρη				
Βάρος υδραυλ. τμήματος αντλίας	Μέγ. 20,1	kg	Βάρος συγκροτήματος	Μέγ. 60,1 kg
Βάρος κινητήρα	40	kg		

Υλικά κατασκευής			
Κέλυφος αντλίας	EN-GJL-250		
Πτερωτή	EN-GJL-250		
Κέλυφος κινητήρα	EN-GJL-250		

Κινητήρας					
Ονομασία κινητήρα	P 13.2-10/EAD1X4-T-L01		Αριθμός πόλων	4	
Ονομ. ισχύς	1,5	kW	Ονομαστ. ταχύτ. Περιστροφής	1413	1/min
Απορρόφηση ισχύος σε Ονομ. ισχύ				1,97	kW
Ονομ. τάση				400 ~3	V
Απορρόφ. ρεύματος στην ονομ. ισχύ				3,7	A
Βαθμός απόδ. στην ονομ. ισχύ				76,3	%
συνφ στην Ονομ. ισχύ	0,77		Ονομ. συχνότητα	50	Hz
συνφ εκκίνησης	0,5		Είδος λειτουργίας: υγρή	S1	
Ρεύμα εκκίνησης DOL	25	A	Είδος λειτουργίας: ξηρή	S2 30, S3 25%	
Ρεύμα εκκίνησης Y/Δ	8,3	A	Μέγ. θερμοκρασία ρευστού	313	K
Ροπή στρέψης εκκίνησης	29	Nm	Μέγ. αριθμ. ωριαίων εκκιν.	50	
Ροπή αδράνειας μάζας	0,0028	kg m²	Βαθμός προστασίας	IP 68	
Επιλεγμ. αντιεκρ. Προστασία	ATEX		Αριθμός Ex	BVS 11 ATEX E 119 X	
Σήμανση Ex	II 2G Ex db IIB T4 Gb				
Καλώδιο σύνδεσης κινητήρα			7G1,5 H07RN-F		

Στοιχεία σημείου λειτουργίας					
Παροχή	5,2	m³/h	Ρευστό μέσον	Νερό, καθαρό	
Μαν. ύψος	6,4	m	Τιμή NPSH της αντλίας	4,6	m
Ισχύς στον άξονα P_2	0,44	kW	Ταχύτητα περιστροφής	1458	1/min
Βαθμός απόδ. Αντλίας	20,5	%	Ολικός βαθμός απόδοσης	$= \frac{P_2 * \text{Βαθμός απόδ. Αντλίας}}{P_1}$	
Απορροφώμενη ισχύς P_1	0,71	kW			
Μέγ. παροχή	54,4 m³/h	Μαν. ύψος σε Μέγ. Παροχή	1,4 m	Μαν. ύψος σε μηδεν. παροχή	6,7 m
Σημείο βέλτ. Απόδ. Q (ΣΒΑ)	23,3	m³/h	Σημείο βέλτιστης απόδοσης H (ΣΒΑ)	4,9	m
Νο είδους	6064738				

3/12/18

Έργο:
Αριθμός Έργου:

Ημερ/νία: 2017-09-06
Συντάκτης:

wilo

Τεχνικά στοιχεία

Υποβρύχια αντλία λυμάτων — Rexa PRO V06 DA-623 / EAD1X4-T0015-540-O

Τεχνική περιγραφή
Υποβρύχια αντλία λυμάτων, ως υποβρύχιο συγκρότημα με κινητήρα, για σταθερή, κατακόρυφη τοποθέτηση, για άντληση ανεπεξέργαστων χημικά και μηχανικά μη διαβρωτικών για την αντλία, λυμάτων. Ακτινικά διατεταγμένο στόμιο κατάθλιψης και αξονική αναρρόφηση. Το συγκρότημα είναι κατασκευασμένο με τρόπο εύκολο για τη συντήρηση. Οι παροχές πρέπει να εξασφαλίζονται κατά ISO 9906 Παρ. A.

3/12/18

Έργο: Ημερ/νία: 2017-09-06

Αριθμός Έργου: Συντάκτης:

wilo

Καμπύλες απόδοσης

Υποβρύχια αντλία λυμάτων — Rexa PRO V06 DA-623 / EAD1X4-T0015-540-O

Στοιχεία ισχύος σε σχέση με: Νερό, καθαρό [100%] ; 293K; 998,19kg/m³; 1,0004mm²/s

Απόκλιση κατά ISO 9906 / Παράρτημα A.2

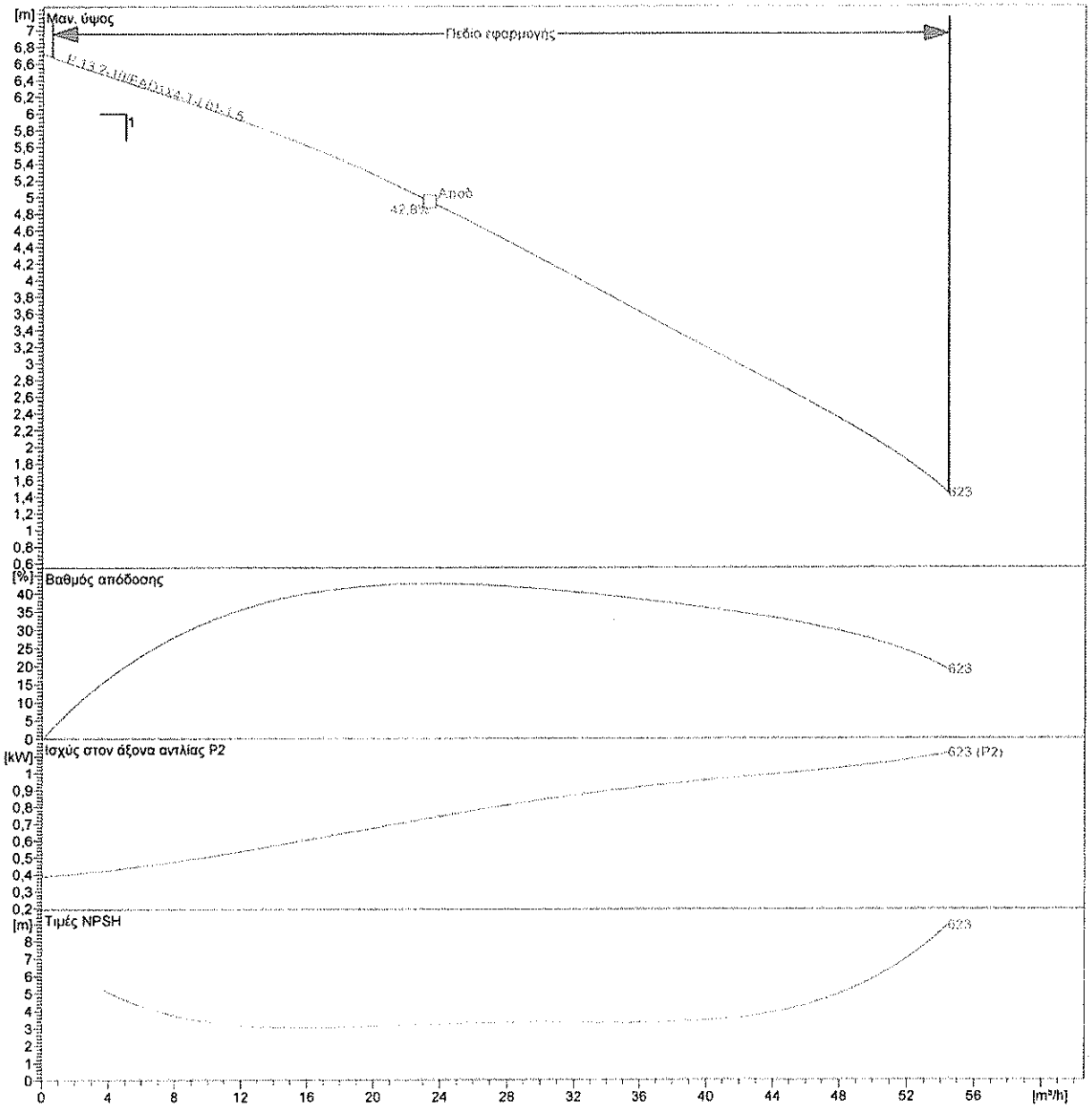

Αντλία			Στοιχεία σημείου λειτουργίας		
Πτερωτή (διάμ.) Σχεδιασμ.	135	mm	Παροχή	5,2	m³/h
Ονομαστικός αριθμός στροφών	1450	1/min	Μαν. ύψος	6,4	m
Συχνότητα	50	Hz	Ισχύς στον άξονα P_2	0,44	kW
Τύπος πτερωτής	Πτερωτή Vortex		Βαθμός απόδ. Αντλίας	20,5	%
Κινητήρας			Απορροφώμενη ισχύς P_1	0,71	kW
Ονομ. ισχύς	1,5	kW	Τιμή NPSH της αντλίας	4,6	m
Επιλεγμ. αντιεκρ. Προστασία	ATEX		Ταχύτητα περιστροφής	1458	1/min

3/12/19

Έργο: Ημερ/νία: 2017-09-06
Αριθμός Έργου: Συντάκτης:

wilo

Τεχνικά στοιχεία

Υποβρύχια αντλία λυμάτων Rexa PRO V06 DA-623 / EAD1X4-T0015-540-O

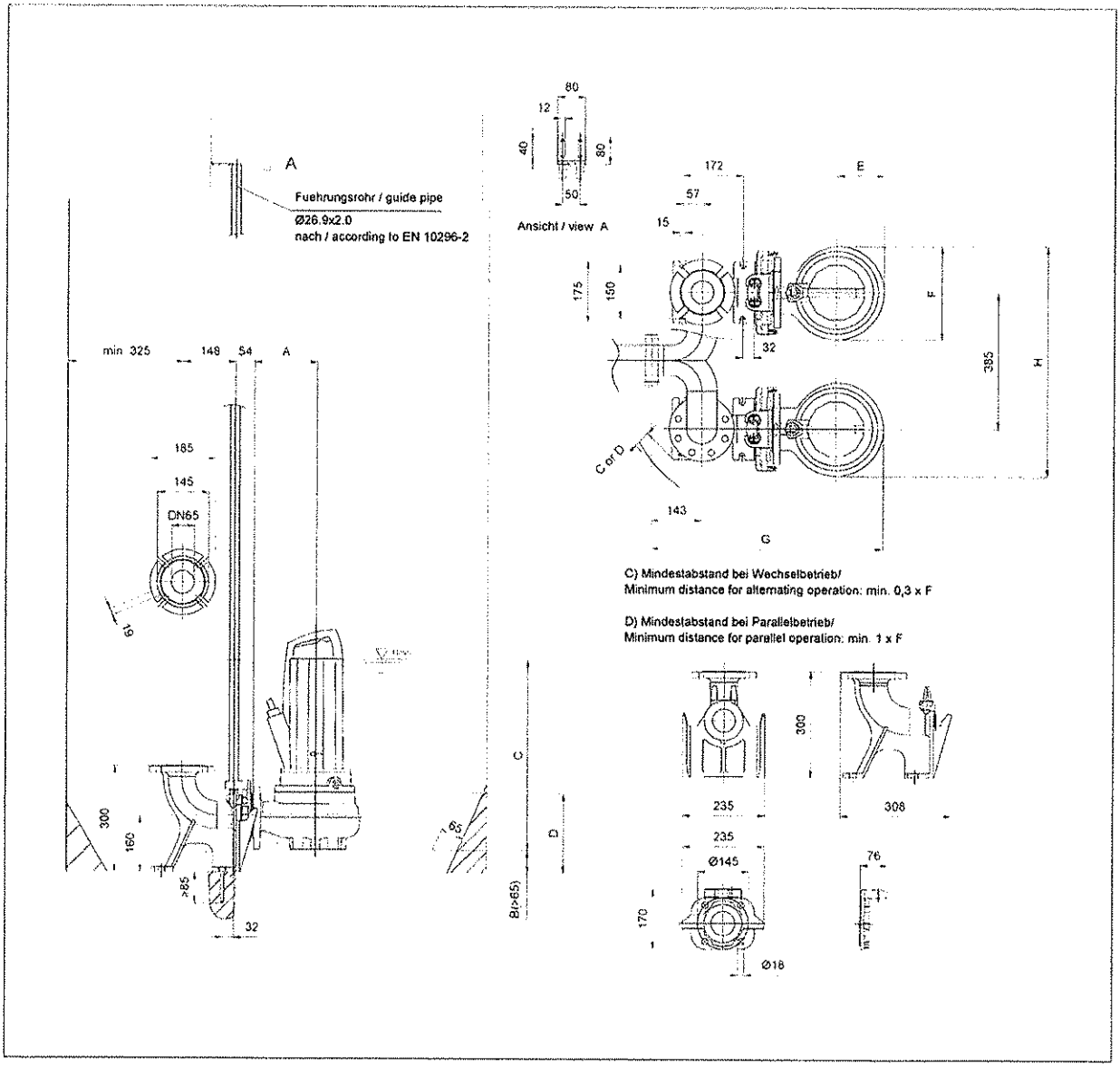

Διαστάσεις σε mm				Συνδέσεις
A	180			Στόμιο αναρ. DN65 PN10
B	65			
D	225			
E	147			
F	263			Στόμιο κατάθλ. DN65, DN80, Size 2.5, Size 3, cutoff, Ver. 02 PN10
G	672			
H	648			
				Suspension device DN65 DN65/2RK

3/12/18

Έργο: Ημερ/νία: 2017-09-06
Αριθμός Έργου: Συντάκτης:

wilo

Στοιχεία κινητήρα

P 13.2-10/EAD1X4-T-L01-1,5 1,5 kW 400 V 50Hz 3~

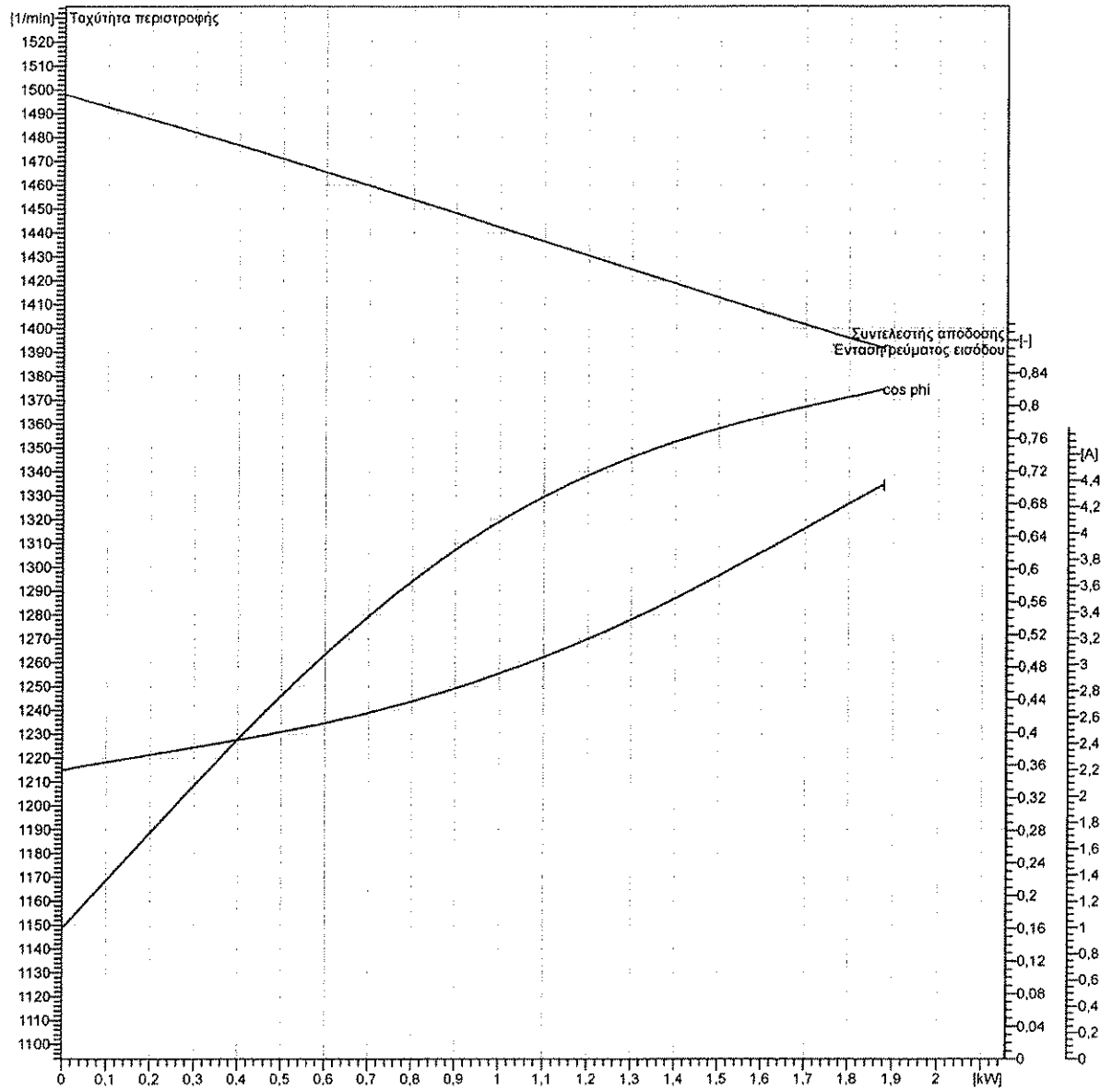

Στοιχεία εφαρμογής			Στοιχεία κινητήρα		
Είδος υποβρύχιας λειτουργίας	S1		Απορρόφηση ισχύος σε Ονομ. ισχύ	1,97	kW
Είδος λειτουργίας: ξηρή	S2 30, S3 25%		Ονομ. ισχύς	1,5	kW
Συντελεστής Service	1		Ονομαστ. ταχύτ. Περιστροφής	1413	1/min
Μέγ. θερμοκρασία ρευστού	313	K	Απορρόφ. ρεύματος στην ονομ. ισχύ	3,7	A
Αντιεκρηκτική προστασία			Μέγ. αριθμ. ωριαίων εκκιν.	50	
Επιλεγμ. αντιεκρ. Προστασία	ATEX		Βάρος κινητήρα	40	kg
Αριθμός Ex	BVS 11 ATEX E 119 X		Βαθμός απόδ. στην ονομ. ισχύ	76,3	%
Σήμανση Ex	II 2G Ex db IIB T4 Gb		συνφ στην Ονομ. ισχύ	0,77	
Καλώδιο σύνδεσης κινητήρα			Ρεύμα εκκίνησης DOL	25	A
Καλώδιο σύνδ. κινητ.για εκκίνηση DOL	7G1,5 H07RN-F		συνφ εκκίνησης	0,5	
Καλώδιο σύνδ. κινητ. για εκκίνηση Y/Δ			Ροπή στρέψης εκκίνησης	29	Nm
Μέγ. δυνατό καλ. σύνδ. Κινητήρα	7x1,5	mm²	Ροπή αδράνειας μάζας	0,0028	kg m²

Q 3/12/18

© Siemens AG 2015

Overview

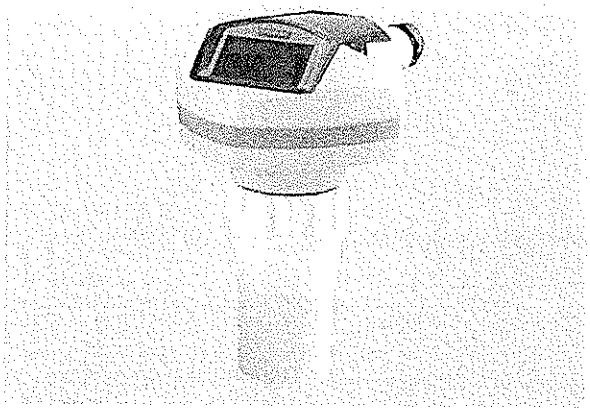

SITRANS Probe LU is a 2-wire loop powered ultrasonic transmitter for level, volume and flow monitoring of liquids in open channels, storage vessels, and simple process vessels.

Benefits

- Continuous level measurement up to 12 m (40 ft) range
- Easy installation and simple start-up
- Programming using infrared Intrinsically Safe handheld programmer, SIMATIC PDM or HART Communicator
- Communication using HART or PROFIBUS PA
- ETFE or PVDF transducers for chemical compatibility
- Sonic Intelligence signal processing
- Auto False-Echo Suppression for fixed obstruction avoidance
- Level to volume or level to flow conversion

Application

The SITRANS Probe LU is ideal for level monitoring in the water and wastewater industry, chemical storage vessels, and small bulk hoppers.

The range of SITRANS Probe LU is 6 or 12 m (20 or 40 ft). Using Sonic Intelligence, Auto False Echo Suppression for fixed obstruction avoidance, and accuracy of 0.15 % of range or 6 mm (0.25 inch), the Probe LU provides unmatched reliability.

The Probe LU offers two communications options: HART or PROFIBUS PA (Profile version 3.0, Class B).

The transducer on the Probe LU is available as ETFE or PVDF to suit the chemical conditions of your application. As well, for applications with varying material and process temperatures, the Probe LU incorporates an internal temperature sensor to compensate for temperature changes.

- Key Applications: chemical storage vessels, filter beds, liquid storage vessels

Configuration

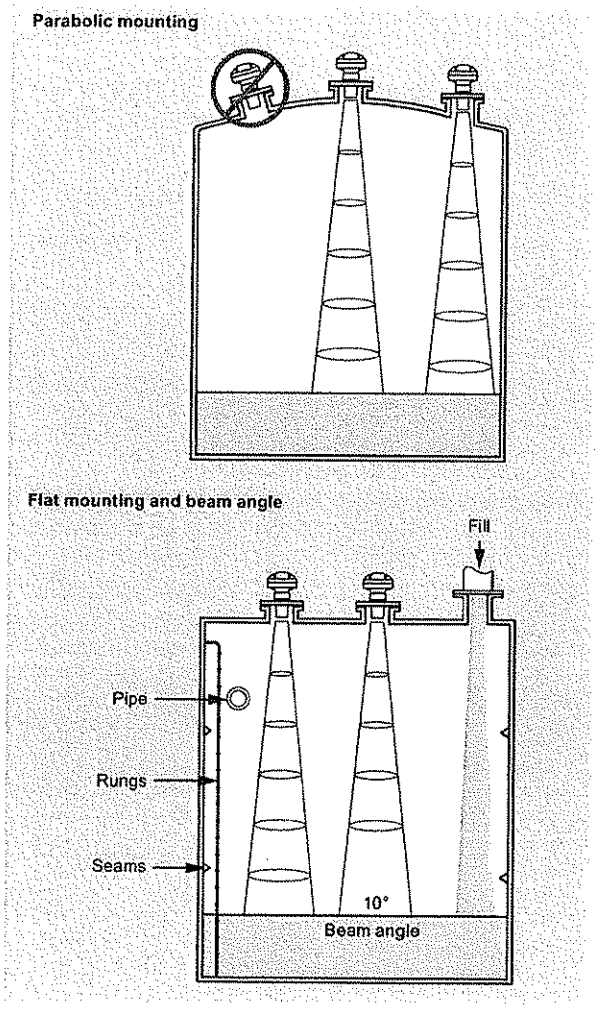

SITRANS Probe LU mounting

© Siemens AG 2015

Technical specifications

Mode of operation	
Measuring principle	Ultrasonic level measurement
Typical application	Level measurement in storage vessels and simple process vessels
Inputs	
Measuring range	
• 6 m (20 ft) model	0.25 ... 6 m (10 inch ... 20 ft)
• 12 m (40 ft) model	0.25 ... 12 m (10 inch ... 40 ft)
Frequency	54 kHz
Outputs	
mA/HART	
• Range	4 ... 20 mA
• Accuracy	± 0.02 mA
PROFIBUS PA	Profile 3, Class B
Performance	
Resolution	≤ 3 mm (0.12 inch)
Accuracy	± the greater of 0.15 % of range or 6 mm (0.24 inch)
Repeatability	≤ 3 mm (0.12 inch)
Blanking distance	0.25 m (10 inch)
Update time	≤ 5 s
• 4/20 mA/HART version	≤ 5 s at 4 mA
• PROFIBUS version	≤ 4 s at 15 mA current loop
Temperature compensation	Built-in to compensate over temperature range
Beam angle	10°
Rated operating conditions	
Ambient conditions	
• Location	Indoor/outdoor
• Ambient temperature	-40 ... +80 °C (-40 ... +176 °F)
• Relative humidity/ingress protection	Suitable for outdoor
• Installation category	I
• Pollution degree	4
Medium conditions	
• Temperature at flange or threads	-40 ... +85 °C (-40 ... +185 °F)
• Pressure (vessel)	0.5 bar g (7.25 psi g)
Design	
Material (enclosure)	PBT (Polybutylene Terephthalate)
Degree of protection	Type 4X/NEMA 4X, Type 6/NEMA 6/ IP67/IP68 enclosure
Weight	2.1 kg (4.6 lb)
Cable inlet	2 x M20 x 1.5 cable gland or 2 x ½" NPT thread or 1 x M20 x 1.5 and 1 x ½" NPT
Material (transducer)	Buna-N seal with ETFE (Ethylene Tetrafluoroethylene) or PVDF (Polyvinylidene Fluoride)

Process connection	
Threaded connection	2" NPT [(Taper), ANSI/ASME B1.20.1] R 2" [(BSPT), EN 10226] or G 2" [(BSPP), EN ISO 228-1]
Flange connection	3 inch (80 mm) universal flange
Other connection	FMS 200 mounting bracket (see page 4/187) or customer supplied mount
Display and Controls	
Interface	Local: LCD display with bar graph Remote: Available via HART or PROFIBUS PA
Configuration	Using Siemens SIMATIC PDM (PC) or HART handheld communicator or Siemens infrared handheld programmer
Memory	Non-volatile EEPROM
Power supply	
4 ... 20 mA/HART	Nominal 24 V DC with 550 Ω maximum; maximum 30 V DC 4 ... 20 mA
PROFIBUS PA	12, 13, 15, or 20 mA depending on programming (General Purpose or Intrinsically Safe version) Per IEC 61158-2
Certificates and Approvals	
General	$CSA_{US/C}$, FM, CE, RCM
Marine (only applies to HART communication option)	• Lloyd's Register of Shipping • ABS Type Approval
Hazardous	
• Intrinsically Safe (Europe)	ATEX II 1G Ex ia IIC T4 Ga
• Intrinsically Safe (USA/Canada)	CSA/FM, Class I, Div. 1, Groups A, B, C, D; Class II, Div. 1, Groups E, F, G; Class III T4
• Intrinsically Safe (International)	SIR 13.0008X Ex ia IIC T4 Ga
• Intrinsically Safe (Brazil)	INMETRO Ex ia IIC T4 Ga
• Non-incendive (USA)	FM Class I, Div. 2, Groups A, B, C, D T4
Handheld Programmer	
Intrinsically Safe Siemens handheld programmer	Infrared receiver
• Approvals for handheld programmer	ATEX II 1GD / IECEx SIR 09.0073 Ex ia IIC T4 Ga Ex iaD 20 T135 °C FM/CSA Class I, II, III, Div. 1, Groups A,B,C,D,E,F,G T6
Ambient temperature	-20 ... 50 °C (-5 ... 122 °F)
Interface	Proprietary infrared pulse signal
Power	3 V lithium battery (non-replaceable)

3/12/18

© Siemens AG 2015

Selection and Ordering data		Article No.
SITRANS Probe LU **2-wire, loop powered ultrasonic transmitter for level, volume and flow monitoring of liquids in open channels, storage vessels, and simple process vessels.**	↗	**7ML5221-**
↗ Click on the Article No. for the online configuration in the PIA Life Cycle Portal.		
Enclosure/Cable Inlet		
Plastic (PBT), 1 x M20 x 1.5 and 1 x ½" NPT (no cable glands supplied)	◇	**0**
Plastic (PBT), 2 x M20 x 1.5 (includes 1 general purpose cable gland: 7ML1930-1AM)	◇	**1**
Plastic (PBT), 2 x ½" NPT (no cable glands supplied)	◇	**2**
Range/Transducer material		
6 m (20 ft), ETFE	◇	**A**
6 m (20 ft), PVDF Copolymer	◇	**B**
12 m (40 ft), ETFE	◇	**C**
12 m (40 ft), PVDF Copolymer	◇	**D**
Process connection		
2" NPT [(Taper), ANSI/ASME B1.20.1]	◇	**A**
R 2" [(BSPT), EN 10226]	◇	**B**
G 2" [(BSPP), EN ISO 228-1]	◇	**C**
Communication/Output		
4 ... 20 mA, HART	◇	**1**
PROFIBUS PA	◇	**2**
Approvals		
General Purpose, FM, $CSA_{US/C}$, CE, RCM, KCC	◇	**1**
Non-incendive, FM Class I, Div. 2 Groups A,B,C,D T5[1]	◇	**4**
Intrinsically Safe, CSA/FM Class I, Div. 1, Groups A, B, C, D; Class II, Div. 1, Groups E, F, G; Class III T4[2]	◇	**5**
Intrinsically Safe ATEX 1G / IECEx / INMETRO Ex ia IIC T4 Ga, RCM, KCC[2]	◇	**6**
Intrinsically Safe ATEX 1G / IECEx / INMETRO Ex ia IIC T4 Ga, RCM, KCC[3]	◇	**7**
Intrinsically safe, CSA/FM Class I, Div. 1, Groups A, B, C, D; Class II, Div. 1 Groups E, F, G; Class III T4[3]	◇	**8**

[1] Available with Enclosure/Cable Inlet option 2 only.

[2] Available with communication option 2 only.

[3] Available with communication option 1 only.

◇ We can offer shorter delivery times for configurations designated with the Quick Ship Symbol ◇. For details see page 9/5 in the appendix.

Selection and Ordering data	Order code
Further designs	
Please add "**-Z**" to Article No. and specify Order code(s).	
Stainless steel tag [69 x 50 mm (2.71 x 1.97 inch)]: Measuring-point number/identification (max. 27 characters) specify in plain text	◇ **Y15**
Operating Instructions for HART/mA device	Article No.
English	**A5E32337695**
French	**7ML1998-5HT11**
German Note: The Operating Instructions should be ordered as a separate item on the order.	**A5E34957881**
Additional Multi-language Quick Start manual This device is shipped with the Siemens Level and Weighing manual DVD containing the ATEX Quick Start and Operating Instructions library.	**A5E32168031**
Operating Instructions for PROFIBUS PA device	
English	**A5E32337708**
German Note: The Operating Instructions should be ordered as a separate item on the order.	**A5E34957884**
Additional Multi-language Quick Start manual This device is shipped with the Siemens Level and Weighing manual DVD containing the ATEX Quick Start and Operating Instructions library.	**A5E32081626**
Accessories	
Handheld programmer, Intrinsically Safe, EEx ia	**7ML5830-2AH**
Handheld programmer, General Purpose approvals	**7ML1830-2AN**
Handheld programmer, Infrared, Intrinsically Safe, PROFIBUS PA	**7ML5830-2AJ**
HART modem/USB (for use with a PC and SIMATIC PDM)	**7MF4997-1DB**
2" NPT locknut, plastic	**7ML1830-1DT**
2" BSPT locknut, plastic	**7ML1830-1DQ**
3" ASME, DN 65 PN 10, JIS 10K 3B ETFE Flange adapter for 2" NPT	**7ML1830-1BT**
3" ASME, DN 65 PN 10, JIS 10K 3B ETFE Flange adapter for 2" BSPT	**7ML1830-1BU**
One General Purpose polymeric cable gland M20 x 1.5, rated for -20 ... +80 °C (-4 ... +176 °F)	**7ML1930-1AM**
One metallic cable gland M20 x 1.5, rated -40 ... +80 °C (-40 ... +176 °F) for General Purpose or ATEX EEx e installations (available for HART only)	**7ML1930-1AP**
One metallic cable gland M20 x 1.5, rated -40 ... +80 °C (-40 ... +176 °F) with integrated shield connection (available for PROFIBUS PA)	**7ML1930-1AQ**
Probe LU, rock guard/sunshield kit, 304 stainless steel	**7ML1930-1GH**
SITRANS RD100, loop powered display - see Chapter 7	**7ML5741-...**
SITRANS RD200, universal input display with Modbus conversion - see Chapter 7	**7ML5740-...**
SITRANS RD300, dual line display with totalizer and linearization curve and Modbus conversion - see Chapter 7	**7ML5744-...**
SITRANS RD500 web, universal remote monitoring solution for instrumentation - see Chapter 7	**7ML5750-...**
For applicable back up point level switch see point level measurement section.	
Plastic lid	**7ML1830-1KB**

◇ We can offer shorter delivery times for configurations designated with the Quick Ship Symbol ◇. For details see page 9/5 in the appendix

3/12/18

© Siemens AG 2015

Options

Flange adapter for mating 2" NPT or 2" BSP process connections to 3" ASME, DN 65 PN 10 and JIS 10K 3B flanges

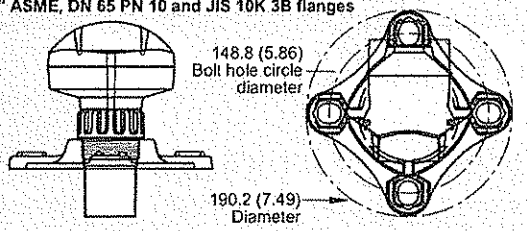

SITRANS Probe LU optional flange adapter, dimensions in mm (inch)

SITRANS Probe LU with FMS 200 mounting bracket

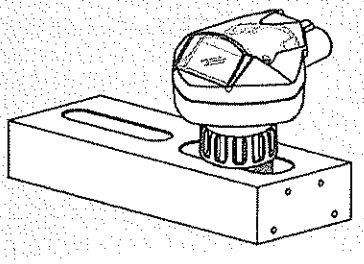

SITRANS Probe LU with optional mounting bracket

Dimensional drawings

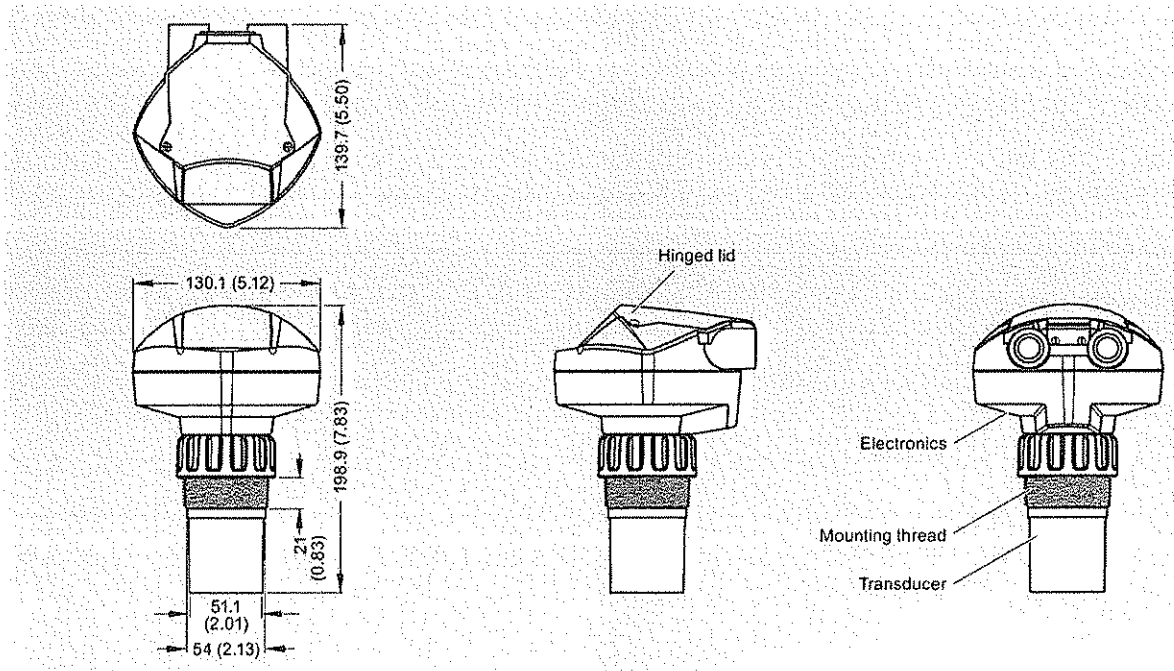

Note: Above model is shown without M20 cable glands or 1/2" NPT conduit connectors.

SITRANS Probe LU, dimensions in mm (inch)

3/12/18

© Siemens AG 2015

Schematics

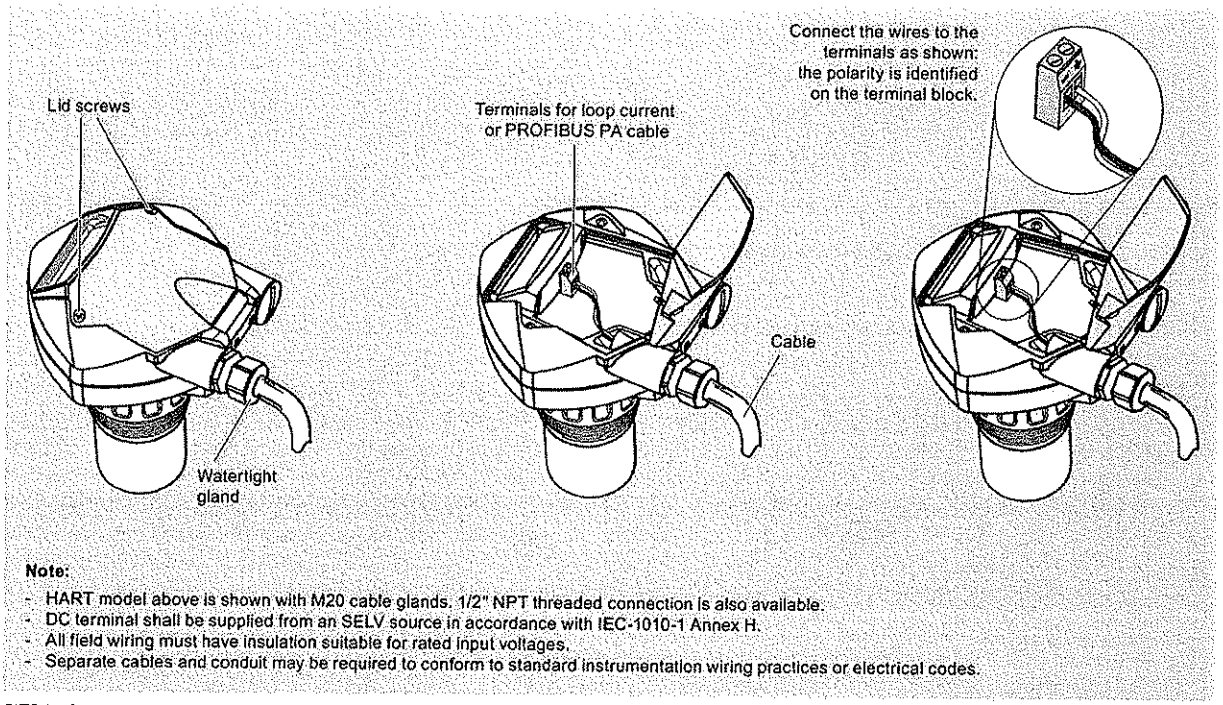

Note:

- HART model above is shown with M20 cable glands. 1/2" NPT threaded connection is also available.
- DC terminal shall be supplied from an SELV source in accordance with IEC-1010-1 Annex H.
- All field wiring must have insulation suitable for rated input voltages.
- Separate cables and conduit may be required to conform to standard instrumentation wiring practices or electrical codes.

SITRANS Probe LU connections

AS950
PORTABLE SAMPLER

Applications

- Wastewater
- Collection systems
- Industrial pretreatment
- Environmental monitoring
- Stormwater

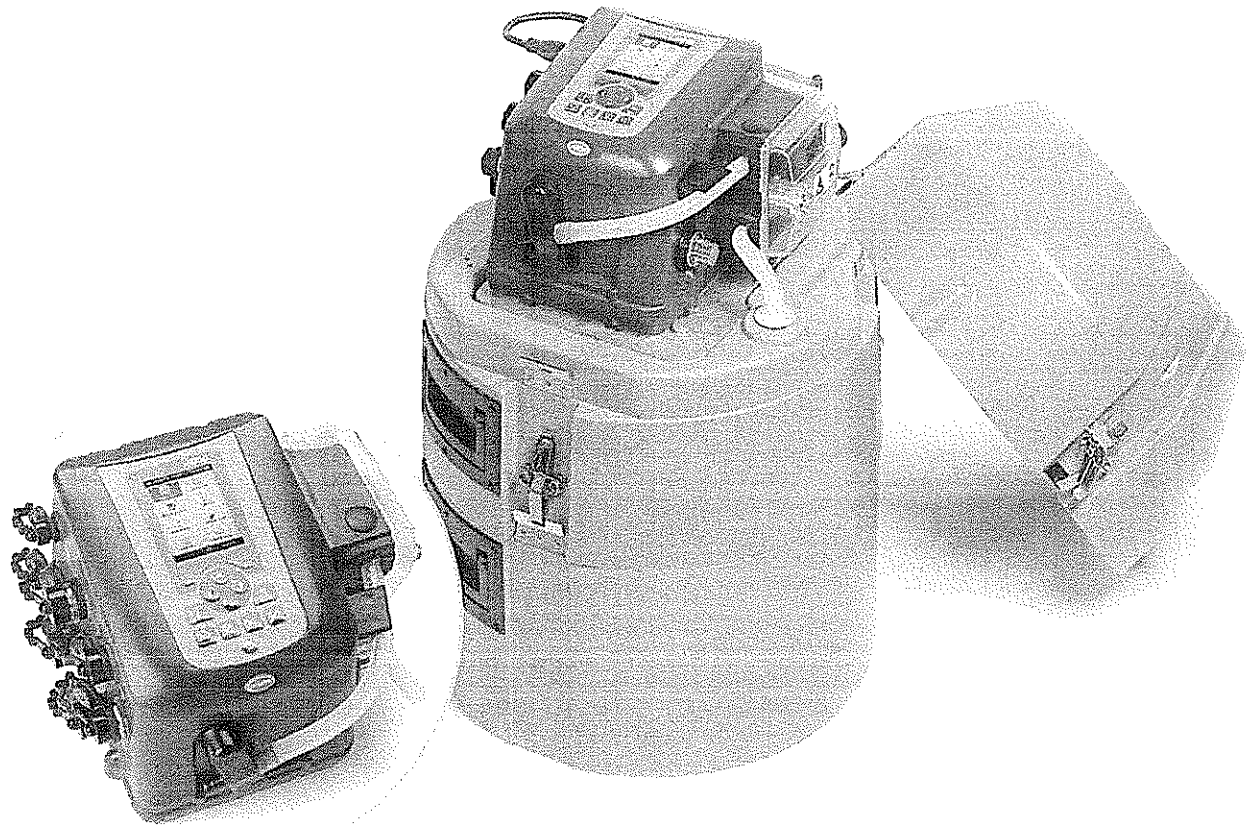

Sampling has never been this easy.

HACH LANGE's AS950 sampler controller makes programming, data transfer and operation more intuitive and error-free.

Easiest and most intuitive operation

The large full colour display and intuitive programming give you access to all your programmable criteria on a single screen - eliminating scrolling through menus and supporting error-free operation.

Most convenient data transfer and programming available

The AS950 is the only sampler that utilises a USB drive to upload and download data and copy programs from one sampler to another.

Confidence in your sampling process

The program status screen instantly communicates alarms missed samples and program progress for quick and easy troubleshooting

Field convertible for compact or discrete sampling

Weighing only 12.7 kg the AS950 portable sampler is designed for accuracy and convenience. Quickly switch between composite and discrete sampling in the field. Configurable for single or multiple bottle applications, it is specifically designed for use in 18-inch manholes.

Easy maintenance at low cost

Spring-mounted rollers provide long tubing life keeping maintenance costs low. The desiccant and pump tubing can easily be accessed; the replacement is possible without any tools. The rugged see-through pump cover is made for a quick visual inspection.

HACH LANGE

13/12/10

Technical Data*

AS950 Portable Sampler

Housing material	Impact resistant ABS plastic, 3-section construction Double-walled base with 2.54 cm insulation, direct ice contact with bottles (Sampler)
Temperature	Operating: 0 - 49 °C
	Storage: -40 - 60 °C
Power requirements (Voltage)	12 V DC
Dimensions (W x H x D)	Standard Base: 50.5 cm x 69.4 cm
	Compact Base: 44.1 cm x 61 cm
	Composite Base: 50.28 cm x 79.75 cm
Weight	Standard: 15 kg with (24) 1 L Polyethylene bottles; 14.8 kg with 10 L Polyethylene bottle
	Compact Base: 12.2 kg with (24) 575 mL Polyethylene bottles; 12.9 kg with 10 L Polyethylene bottle
	Composite Base: 15 kg with (1) 21 L Polyethylene bottle

AS950 Controller

Housing material	PC/ABS blend, NEMA 4X, 6, IP68, corrosion and ice resistant (Controller)
Display	1/4 VGA, Colour; self-prompting/ menu-driven program
User interface	Membrane switch keypad with 2 multiple function soft keys
Languages user interface	English, French, Spanish, Italian, German, Portuguese, Chinese
Lock function	Access code protection prevents tampering
Memory	Sample history: 4000 records;
	Data log: 325,000 records;
	Event log: 2000 records
Communication capabilities	USB and optional RS485 (MODBUS)
Inputs	One 0/4-20 mA input for flow pacing
Certifications	CE, UL

Sample container

STANDARD BASE CAPACITY:

(24) 1 L Polyethylene or 350 mL Glass bottles

(8) 2.3 L Polyethylene or 1.9 L Glass bottles

(4) 3.8 L Polyethylene or 3.8 L Glass bottles

(2) 3.8 L Polyethylene or 3.8 L Glass bottles

(1) 21 L Polyethylene composite bottle or

(1) 15 L Polyethylene composite bottle or

(1) 20 L Polyethylene composite bottle or

(1) 10 L Polyethylene or 10 L Glass composite bottle

COMPACT BASE CAPACITY:

(24) 575 mL Polyethylene bottles

(8) 950 mL Glass bottles

(1) 10 L Polyethylene or 10 L Glass bottle

COMPOSITE BASE CAPACITY:

(1) 21 L Polyethylene bottle

ICE CAPACITY:

Compact Base: 3.9 kg with (24) 575 mL PE bottles

Standard Base: 14.5 kg with (24) 350 mL Glass bottles

**Subject to change without notice.*

3/12/18

Technical Data*

Sampling Features

Programs

Dual Programs: Up to 2 sample programs can be run sequentially, in parallel, or according to day of week scheduling; enabling a single sampler to function like multiple samplers

Sampling mode

Pacing: Time weighted, Flow weighted, Time table, Flow table, Event

Distribution: Single bottle composite, multi-bottle composite, multi-bottle discrete, bottles per sample, samples per bottle or a combination of bottles per sample and samples per bottle

Operating mode

Continuous or non-continuous

Status messages

Communicates what program is running, if there are any missed samples, when the next sample will be taken, how many samples remain, number of logged channels, time of last measurement, memory available, number of active channels, if alarms were triggered, when alarms were triggered, active sensors and cabinet temperature

Alarm

Configurable alarms that show on status screen and are recorded in diagnostics alarm logs. Alarms can be set for system diagnostics and logging such as program end, sample complete, missed samples and full bottle. Channel alarms are setpoint alarms for the recorded measurements (channels), such as pH, level and power supply voltage.

Manual sampling

Initiates a sample collection independent of program in progress

Automatic shutdown

Multiple Bottle Mode: After complete revolution of distributor arm (unless Continuous Mode is selected)

Composite Mode: After preset number of samples have been delivered to composite container, from 1 to 999 samples, or upon full container.

Sample volume

Programmable in 10 mL increments from 10 to 10,000 mL

Sample interval

Selectable in single increments from 1 to 9999 flow pulses or 1 to 9999 minutes in one minute increments

Sample trigger

When equipped with flow sensor or pH/temperature sensor or peripheral monitoring options, sampling can be triggered upon an upset condition when field selectable limits are exceeded

Data logging

SAMPLE HISTORY - Stores up to 4000 entries for sample time stamp, bottle number and sample status (success, bottle full, rinse error, user abort, distributor error, pump fault, purge fail, sample timeout, power fail and low main battery).

MEASUREMENTS - Stores up to 325,000 entries for selected measurement channels in accordance with the selected logging interval.

EVENTS - Ability to store up to 2000 entries in Sample History logging. Records Power On, Power Fail, Firmware Updated, Pump Fault, Distributor Arm Error, Low Memory Battery, Low Main Battery, User On, User Off, Program Started, Program Resumed, Program Halted, Program Completed, Grab Sample, Tube Change Required, Sensor Communication Errors, Cooling Failed, Heating Failed, Thermal Error Corrected.

Diagnostics

View event and alarm logs as well as maintenance diagnostics

**Subject to change without notice.*

3/12/18

Technical Data*

Sample Pump and Strainer

Sample pump

High-speed peristaltic, dual roller, with 0.95 ID x 1.6 OD cm (3/8" ID x 5/8" OD) pump tube;

Pump body IP37, Polycarbonate cover

Vertical lift

8.5 m using 8.8 m maximum of 3/8" Vinyl intake tube at sea level at 20 to 25 °C

Tubing

Pump tubing: 9.5 mm ID x 15.9 mm OD Silicone

Intake tubing: 1.0 - 4.75 m minimum length, 1/4" or 3/8" ID Vinyl or 3/8" ID Teflon-lined Polyethylene with protective outer cover (black or clear)

Sample volume repeatability

Typical: ±5% of 200 mL sample volume with: 4.6 m vertical lift, 4.9 m of 3/8" Vinyl intake tube, single bottle, full bottle shut-off at room temperature and 1524 m elevation

Sample volume accuracy

Typical: ±5% of 200 mL sample volume with: 4.6 m vertical lift, 4.9 m of 3/8" Vinyl intake tube, single bottle, full bottle shut-off at room temperature and 1524 m elevation

Sample transport velocity

0.9 m/s with 4.6 m vertical lift, 4.9 m of 3/8" Vinyl intake tubing, 21 °C and 1524 m elevation

Pump flow rate

4.8 L/min at 1 m vertical lift with 3/8" intake tube typical

Internal clock

±1 second per day at 25 °C

Intake

Strainers: Choice of Teflon and 316 Stainless Steel construction, or all 316 Stainless Steel in standard size, high velocity, and low profile for shallow depth applications

Purge: Air purged automatically before and after each sample; duration automatically compensates for varying intake line lengths

Rinse: Intake line automatically rinsed with source liquid prior to each sample, from 1 to 3 rinses

Retries or Fault: Sample collection cycle automatically repeated from 1 to 3 times if sample not obtained on initial attempt

Subject to change without notice.

Dimensions

The AS950 Portable Sampler is designed for indoor or outdoor use. No secondary enclosure is required when operated within the specified temperature range. The sampler consists of three main sections - the top cover, the center control system, and the bottle/base section held together by Stainless Steel latches which serve as the connection point for the optional suspension harness. The lockable top cover protects the controller from extreme weather and unauthorized use.

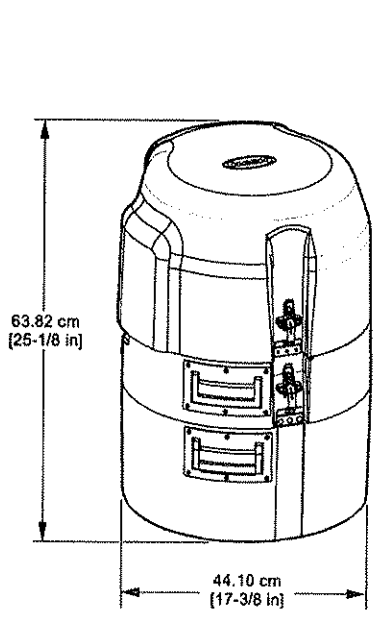

Compact Base

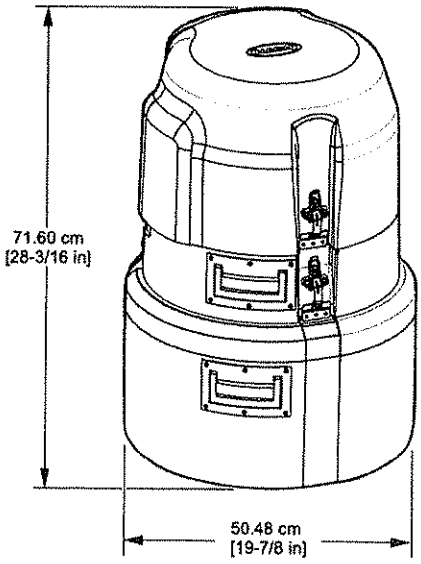

Standard Base

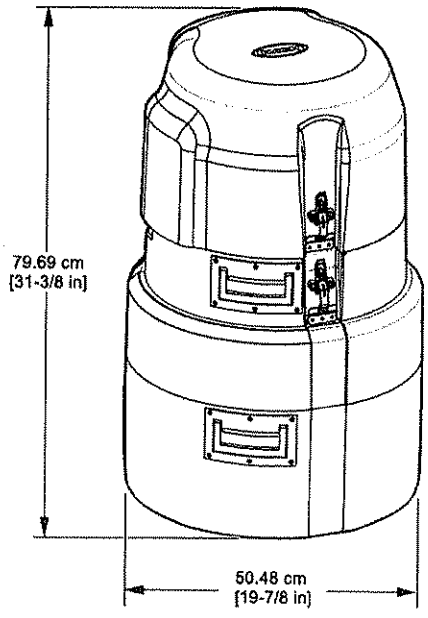

Composite Base

3/12/18

Order Information

ASP.XXXXXXXXXX	AS950 Portable Sampler Portable Sampler with AS950 Controller, available in various configurations and with several factory installed options. Please contact HACH LANGE for more information.

Controller and Base Options

8975	Compact insulated base for AS950 Portable Sampler
8976	Standard insulated base for AS950 Portable Sampler
8561	Composite insulated base for AS950 Portable Sampler

Bottle Options and Accessories

1918	10 L Polyethylene bottle, with cap
6494	20 L Polyethylene bottle, with cap
737	Set of (24) 1 L Polyethylene bottles, with caps
1369	Set of (24) 575 mL Polyethylene bottles, with caps
2348	Set of (8) 950 mL Glass bottles, with Teflon-lined caps
2189	Retainer for (24) 350 mL Glass bottles
1422	Retainer for (8) 1.9 L Glass / (8) 2.3 Polyethylene bottles or (24) 350 mL Glass / (24) 575 mL Polyethylene bottles
2347	Retainer for (8) 950 mL Glass bottles
1502	Container support
8996	Retainer/full container shut-off

Distributors

8582	Distributor with arm for 24 bottle standard base and 12 bottle compact base
8580	Distributor with arm for 24 bottle compact base
8584	Distributor with arm for 2, 4 and 8 bottle standard base and 8 bottle compact base

Tubing and Strainers

920	7 m Vinyl intake tubing, 3/8" ID
922	7 m Teflon-lined Polyethylene tubing, 3/8" ID (requires Connection Kit 2186)
926	Strainer, Teflon/Stainless Steel
2070	Strainer, 316 Stainless Steel
2071	Strainer, for shallow depth applications, 316 Stainless Steel
2186	Connector Kit, for Teflon-lined Polyethylene tubing
4652	Strainer, high velocity and shallow depth
4600-15	Pump tubing, 4.5 m
4600-50	Pump tubing, 15 m
8964	Pump tube insert
9501400	Pump tube insert, non-contact liquid detect

Factory Installed Options

TWO SENSOR PORTS
Accepts HACH LANGE digital Differential pH, HACH LANGE digital AV9000 analyser with submerged area velocity flow and/or HACH LANGE digital US9000 ultrasonic level sensors

RAIN/RS485 PORT
Accepts HACH LANGE Rain Gauge (not included) or can be used as RS485 communications

NON-CONTACT LIQUID DETECT
Sample volume accuracy for applications that require complete tubing replacement

Please contact your local HACH LANGE representative for details.

Inputs/Outputs

9494500	IO9001 Module (connects through auxiliary port), includes 1 relay (high voltage)
9494600	IO9004 Module (connects through auxiliary port), includes multiple 0/4-20 mA outputs and inputs

Accessories

1355	Suspension harness (suspends the sampler)
9542	Manhole support bracket/spanner, 18 to 28 inches
9557	Manhole support bracket/spanner, 28 to 48 inches
5713000	Manhole support bracket, 18 to 27 inches
6987	Weatherguard fiberglass enclosure, 89 cm x 89 cm x 86 cm
6992	Weatherguard fiberglass enclosure, 91 cm x 66 cm x 135 cm
8713200	Solar Module, with 10 W panel and 12 VDC regulator
8754400	12 V Lead Acid battery with 3 pin connector
8753500EU	EU Charger, Lead Acid, 3 pin, 230 V
8754500EU	Power supply, 3 pin connector, 230 V, EU plug
9504700EU	USB cable, A to A (EU)

DOC053.52.35023.Jan15

HACH LANGE

4

Q 3/12/18

3. PUMPING STATION

3/12/10

KARKANIAS
ENVIRONMENTAL TECHNOLOGY S.A.

CHANNEL PENSTOCKS

Manufacturer General Specifications

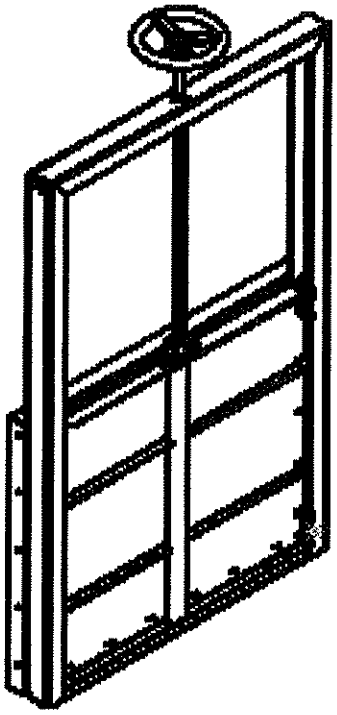

General description

Channel penstocks are 3-sided sealing gates manufactured in square and rectangular dimensions, together with a wide range of trim levels and designs to suit a variety of applications. Operation is achieved manually by means of a hand wheel, electrically or pneumatically by actuators. Mounting options can be mainly on face wall or alternatively embedded in concrete inside channels. The whole structure is made of stainless steel grade 304L for higher corrosion resistance.

HEADQUARTERS:
Industrial Area of Larisa
Postal Code 41004, BOX 3053 Greece
www.karkanias.gr

Phone: +30 2410 541386
Fax: +30 2410 541354
Email: info@karkanias.gr

3/12/18

KARKANIAS
ENVIRONMENTAL TECHNOLOGY S.A.

Construction

- **Frame**: welded stainless steel
- **Frame seals**: parallel resilient EPDM seals bonded to frame sides
- **Door**: stainless steel with reinforcement angles if required
- **Guide system**: stainless steel and PTFE
- **Spindle nut**: zinc-free bronze
- **Spindle drive unit**: stainless steel with trapezoidal thread
- **Operation**: manually or electric with actuator Explosion-Proof II 2 G EExe II T3
- **Dimensions**: upon request

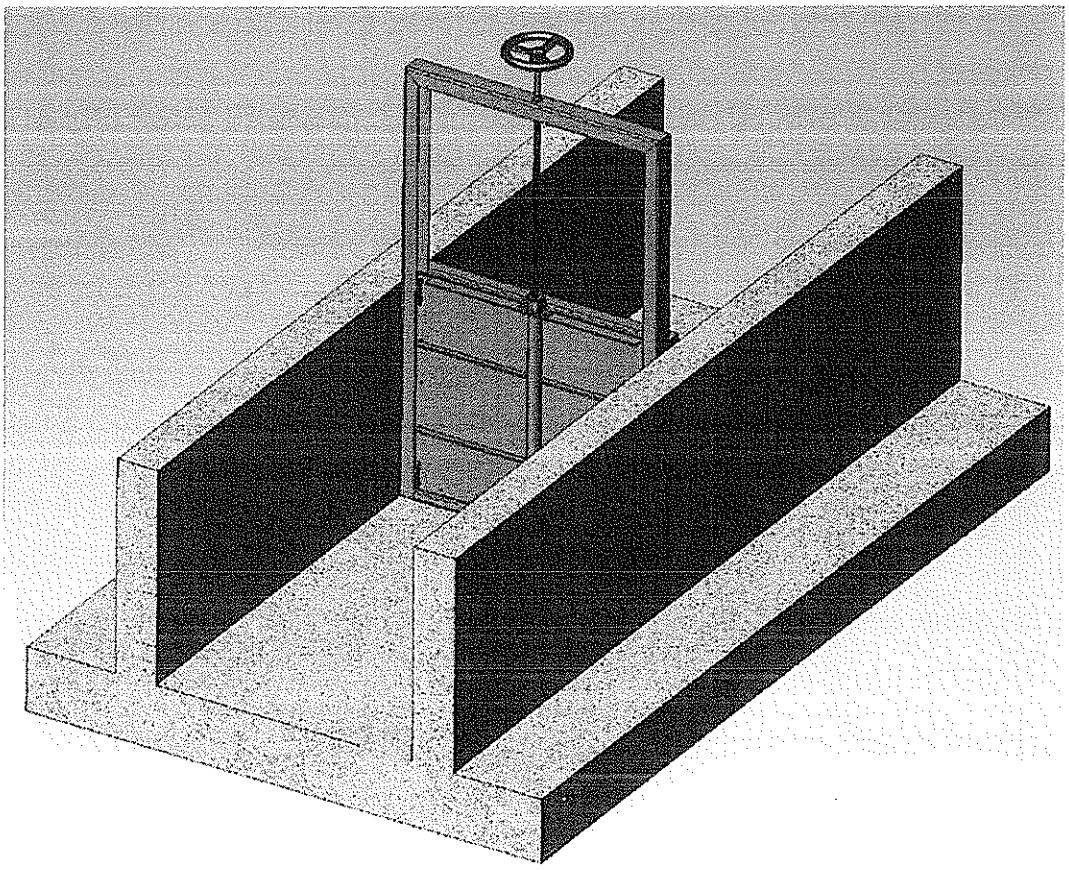

HEADQUARTERS:
Industrial Area of Larisa
Postal Code 41004, BOX 3053 Greece
www.karkanias.gr

Phone: +30 2410 541386
Fax: +30 2410 541354
Email: info@karkanias.gr

Q 3/12/10

KARKANIAS
ENVIRONMENTAL TECHNOLOGY S.A.

Design

Channel penstocks frame is welded stainless steel shaped in U-profile and is suitable for mounting by grouting or by wall mounting at the end or into an open channel. Each penstock is provided with a suitable handwheel of adequate diameter for the duty required. Gearing is supplied where is necessary to ensure that the required operating force applied by hand to the rim of the wheel does not exceed 200 N. Instead of handwheel an electric actuator can be applied. The height of the handing is approximately 1.0 m above the operating level.

Penstocks are of non-rising stem and operation is achieved by a spindle. Spindle's thread form is trapezoidal and direction of closing is clockwise. On the door is fixed the spindle nut which is made of zinc-free bronze. The door is equipped with reinforced ribs in order to withstand the applied pressure load.

Fixing nuts and bolts are made of stainless steel material with grade similar to whole structure.

Penstocks shall be water-tight under the conditions of head and direction of flow as stated in the appropriate Clause or Schedule of the Particular Specification.

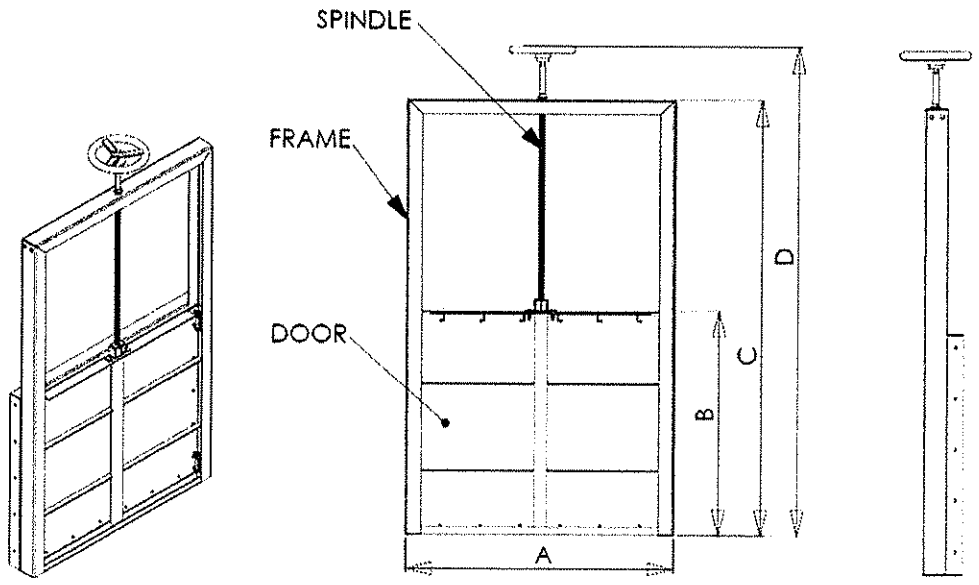

A=CHANNEL WIDTH
B=CHANNEL DEPTH
C=FRAME HEIGHT
D=WHEEL HEIGHT

HEADQUARTERS:
Industrial Area of Larisa
Postal Code 41004, BOX 3053 Greece
www.karkanias.gr

Phone: +30 2410 541386
Fax: +30 2410 541354
Email: info@karkanias.gr

3/12/18

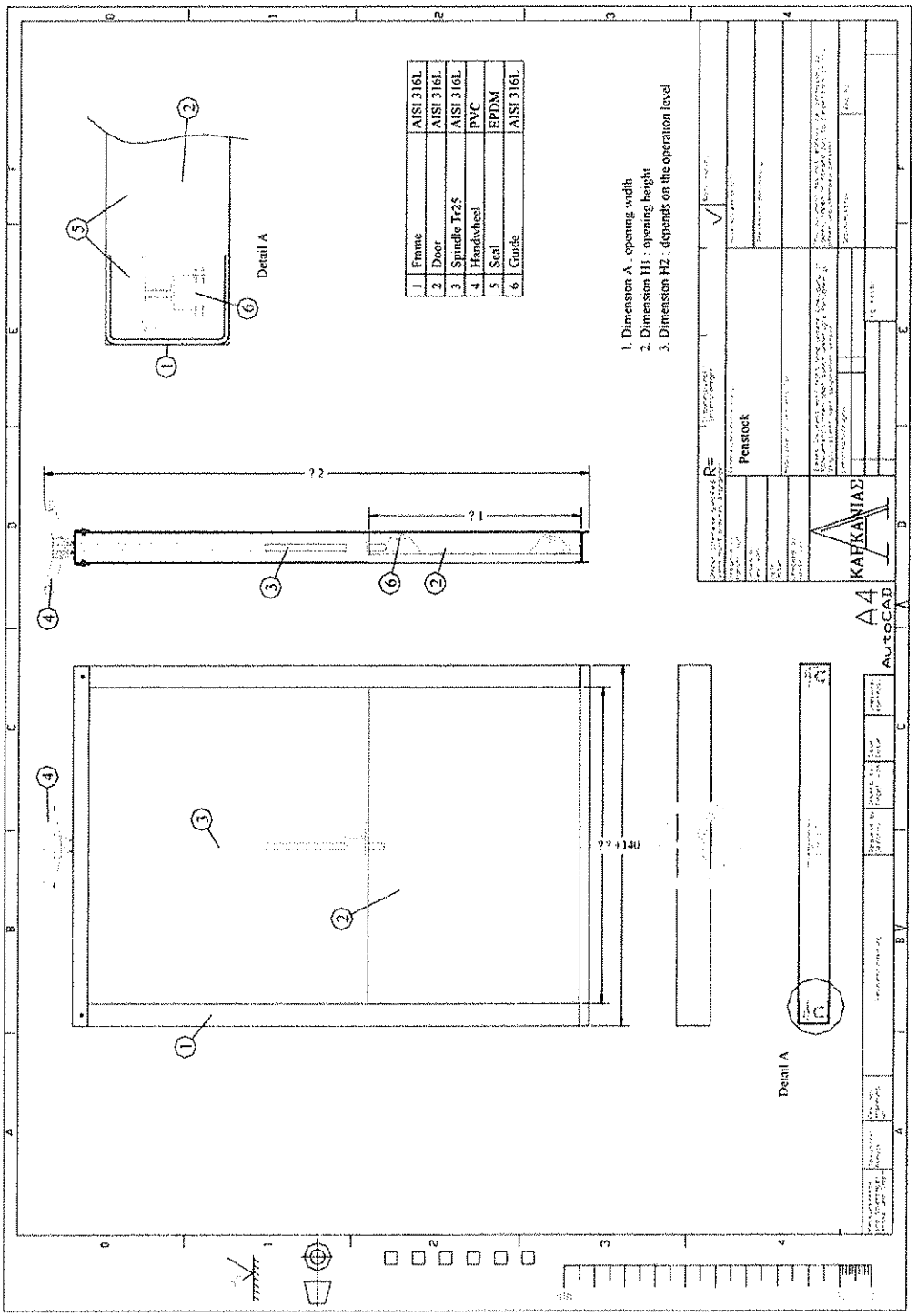

HEADQUARTERS:
Industrial Area of Larisa
Postal Code 41004, BOX 3053 Greece
www.karkanias.gr

Phone: +30 2410 541386
Fax: +30 2410 541354
Email: info@karkanias.gr

Q 3/12/19

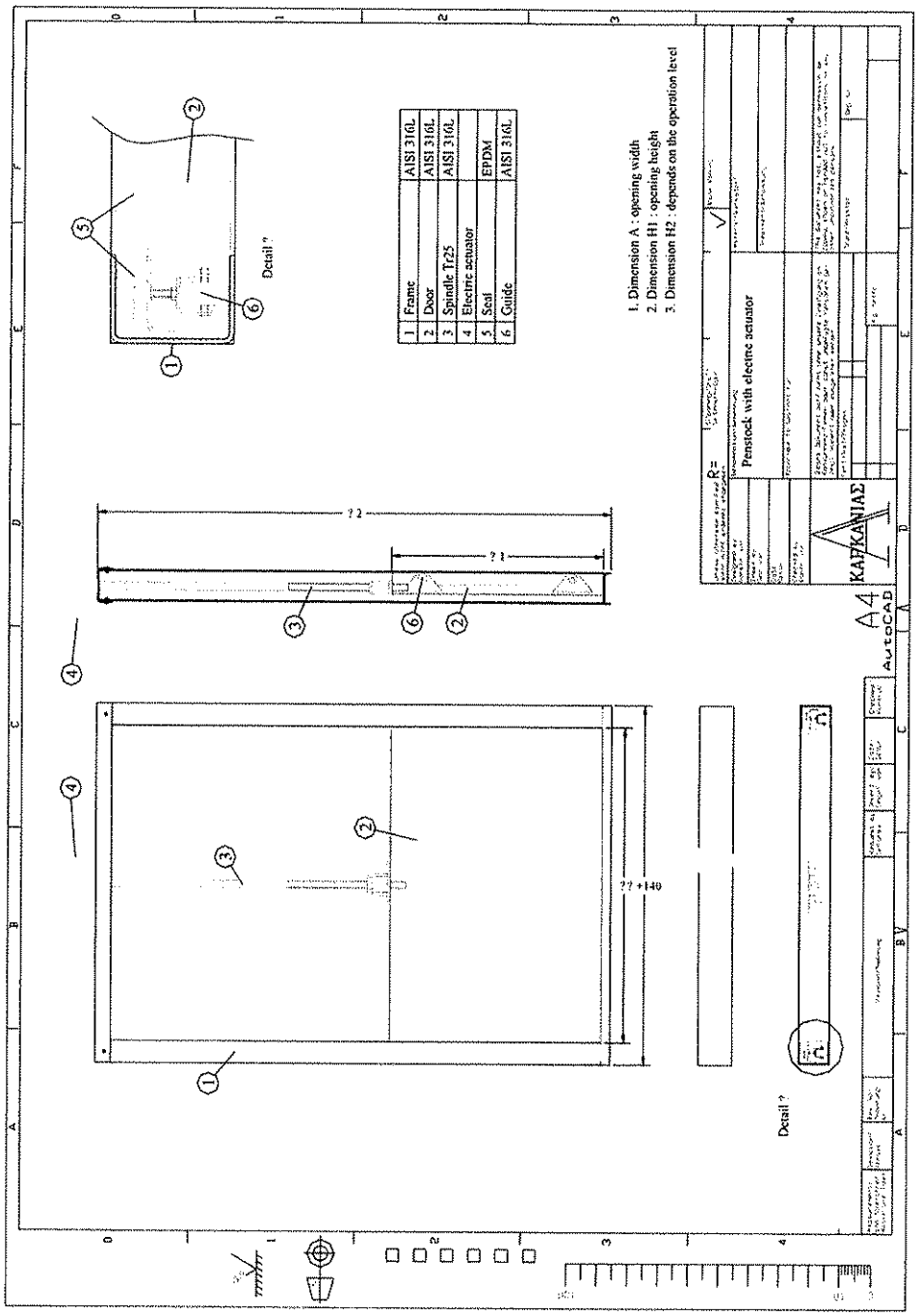

HEADQUARTERS:
Industrial Area of Larisa
Postal Code 41004, BOX 3053 Greece
www.karkanias.gr

Phone: +30 2410 541386
Fax: +30 2410 541354
Email: info@karkanias.gr

3/12/18

KARKANIAS
ENVIRONMENTAL TECHNOLOGY S.A.

COARSE SCREEN

Manufacturer General Specifications

Technical data:

Bar spacing	:	50 mm
Channel width	:	800 mm
Discharge height	:	7.5 m
Driving unit	:	BONFIGLIOLI RIDUTTORI
Type	:	Explosion-Proof II 2 G EExe II T3.

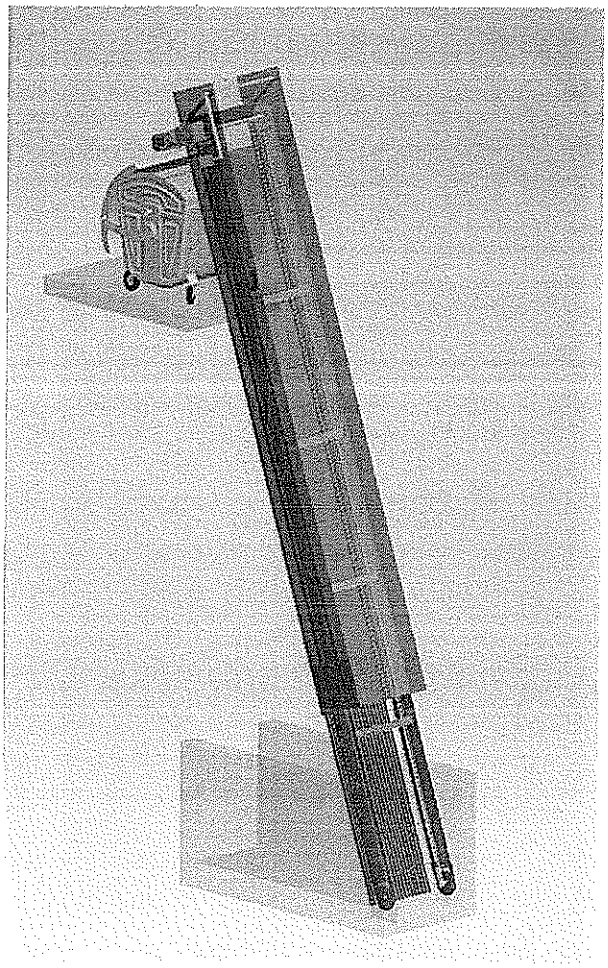

HEADQUARTERS:
Industrial Area of Larisa
Postal Code 41004, BOX 3053 Greece
www.karkanias.gr

Phone: +30 2410 541386
Fax: +30 2410 541354
Email: info@karkanias.gr

23/12/18

KARKANIAS
ENVIRONMENTAL TECHNOLOGY S.A.

Design:

Coarse bar screens are used for the effective screening of wastewater in municipal and industrial wastewater treatment plants. They are intended for installation in pumping stations and treatment plants. The complete structure and all parts in contact with sewage are made of stainless steel AISI 304L, available in different grades upon request.

Bottom part of the structure, immersed in the channel, consists of grid bars with specific span, and a pair of sprockets with drive chains. On the upper part of the screen, the driving system is supplied with electric operation. There are two sprockets attached on each side of the driving shaft, which is driven from the gear motor. Upper sprockets drive chains on which rakes are installed. Through rakes the collected material from the bottom of the channel comes out and falls into the waste container or to a screw dewaterer conveyor.

Sprockets and chains are made from stainless steel material, similar grade to the rest of the structure.

The screen is installed in a suitable angle in order to dewater the screening on its way up to the discharge point.

The coarse screen can be provided completely closed with removable covers upon request, in order to be easily maintained. In this case odor extraction is foreseen. A system for protection against overload is included in standard version.

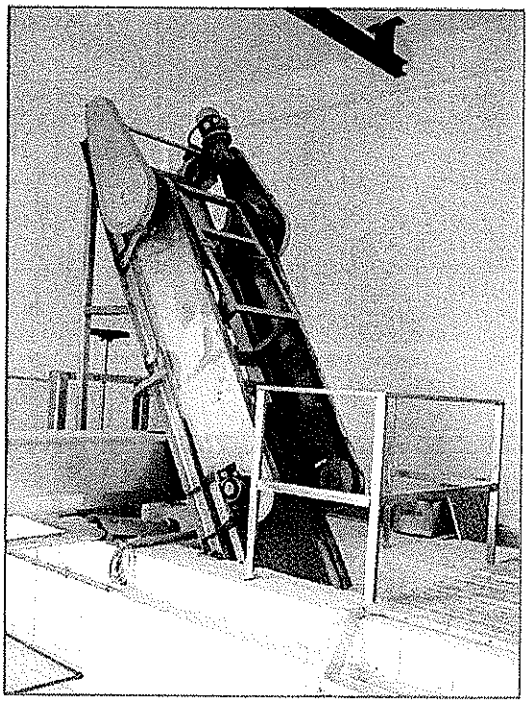

HEADQUARTERS:
Industrial Area of Larisa
Postal Code 41004, BOX 3053 Greece
www.karkanias.gr

Phone: +30 2410 541386
Fax: +30 2410 541354
Email: info@karkanias.gr

3/12/18

KARKANIAS
ENVIRONMENTAL TECHNOLOGY S.A.

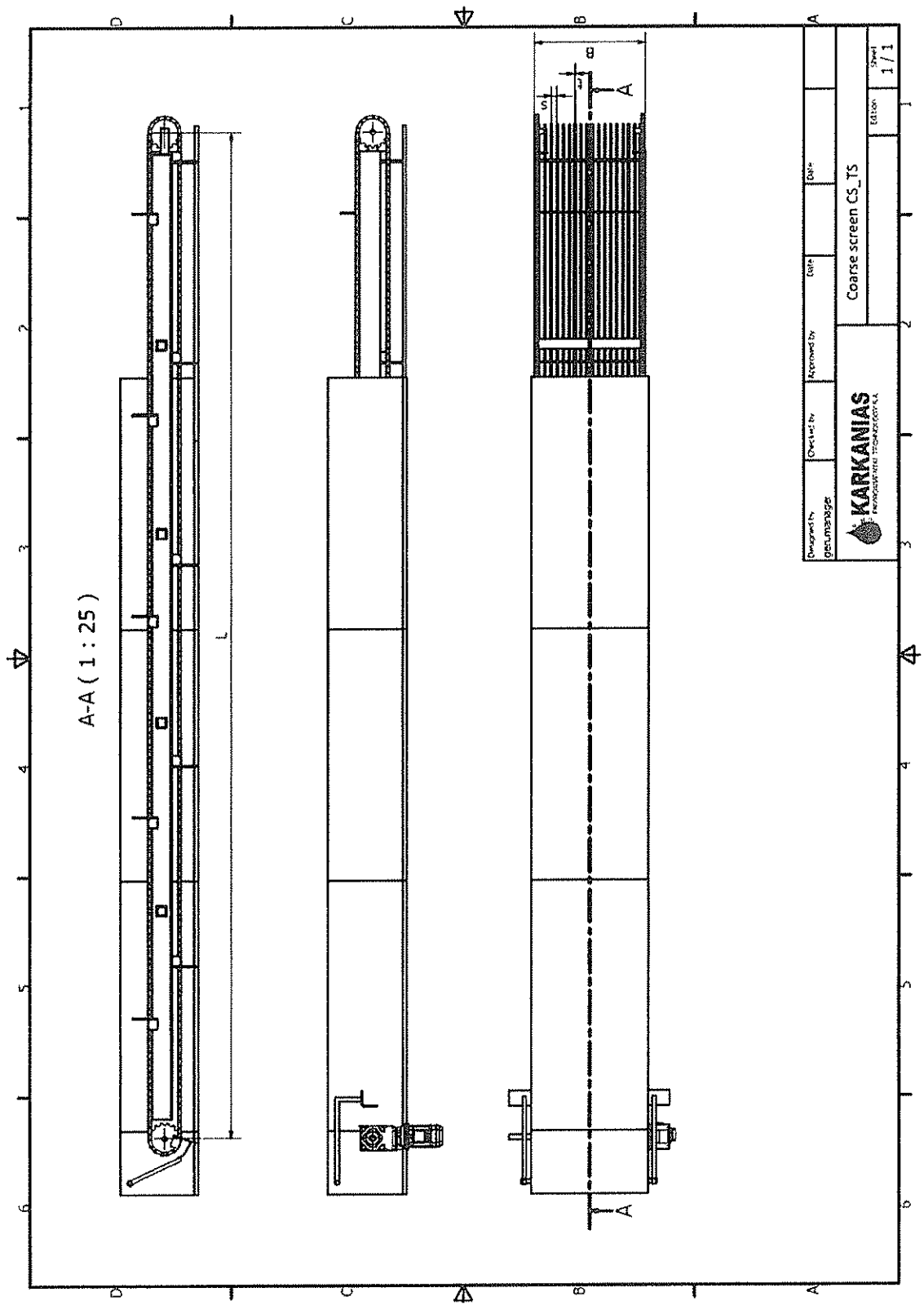

HEADQUARTERS:
Industrial Area of Larisa
Postal Code 41004, BOX 3053 Greece
www.karkanias.gr

Phone: +30 2410 541386
Fax: +30 2410 541354
Email: info@karkanias.gr

3/12/18

EKATERINI VASSILIOU
LAWYER
ELEFTHERIAS 17 - TIRNAVOS 40100
LARISSA - GREECE
TEL. +30-24920 24240
LARISSA BAR ASSOCIATION
email: katvas9987@yahoo.gr

012

CERTIFICATE OF REGISTRATION

This is to certify that

KARKANIAS ENVIRONMENTAL TECHNOLOGY S.A.
Industrial Area of Larissa
PC 41004
PO Box 3053
Larissa
Greece

has been audited and found to meet the requirements of standard
ISO 9001:2008 Quality Management System

Scope of certification

General Contractor in Design, Construction, Operation and Maintenance of Water Management Liquid and Solid Wastes Projects in which Hydraulic, Electromechanical, Structural, Industrial, Energy Projects, Roads and Ports Construction are Included.

Certificate number: 10096

Issue number: 2017-01

Certificate start date: 19 February 2017

Certificate expiry date: 14 September 2018

Date of initial certification: 19 February 2014

Karen Prendergast
Sector Director - Certification
Exova BM TRADA

Exova (UK) Ltd, (T/A Exova BM TRADA), Chiltern House, Stocking Lane, High Wycombe, Buckinghamshire, HP14 4ND, UK
Registered Office: Exova (UK) Ltd, Lochend Industrial Estate, Newbridge, Midlothian EH28 8PL United Kingdom. Reg No. SC070429.

This certificate remains the property of Exova (UK) Ltd. This certificate and all copies or reproductions of the certificate shall be returned to Exova (UK) Ltd or destroyed if requested. Further clarification regarding the scope of this certificate and verification of the certificate is available through Exova BM TRADA or at the above address or at www.exovabmtrada.com

The use of the UKAS accreditation mark indicates accreditation in respect of those activities covered by the accreditation certification 012

Multisite clients - The scope of certification shown above includes the participating sites shown in appendix A

3/12/18

ΕΚΑΤΕΡΙΝΗ ΒΑΣΣΕΛΙΟΥ
LAWYER
ELEFTHERIAS 12 - TIRNAVOS 40100
LARISSA - GREECE
TEL. +30 24920 24240
LARISSA BAR ASSOCIATION
email: katvas9987@yahoo.gr

012

CERTIFICATE OF REGISTRATION

This is to certify that

KARKANIAS ENVIRONMENTAL TECHNOLOGY S.A.
Industrial Area of Larissa
PC 41004
PO Box 3053
Larissa
Greece

has been audited and found to meet the requirements of standard
ISO 14001:2004 Environmental Management System

Scope of certification

General Contractor in Design, Construction, Operation and Maintenance of Water Management Liquid and Solid Wastes Projects in which Hydraulic, Electromechanical, Structural, Industrial, Energy Projects, Roads and Ports Construction are Included.

Certificate number: 2377

Issue number: 2017-01

Certificate start date: 19 February 2017

Certificate expiry date: 14 September 2018

Date of initial certification: 19 February 2014

Karen Prendergast
Sector Director - Certification
Exova BM TRADA

Exova (UK) Ltd, (T/A Exova BM TRADA), Chiltern House, Stocking Lane, High Wycombe, Buckinghamshire, HP14 4ND, UK
Registered Office: Exova (UK) Ltd, Lochend Industrial Estate, Newbridge, Midlothian EH28 8PL United Kingdom. Reg No. SC070429.

This certificate remains the property of Exova (UK) Ltd. This certificate and all copies or reproductions of the certificate shall be returned to Exova (UK) Ltd or destroyed if requested. Further clarification regarding the scope of this certificate and verification of the certificate is available through Exova BM TRADA or at the above address or at www.exova.com

The use of the UKAS accreditation mark indicates accreditation in respect of those activities covered by the accreditation certification 012

Multisite clients - The scope of certification shown above includes the participating sites shown in appendix A

Q 3/12/18

EKATERINI VASSILIOU
LAWYER
ELEFTHERIAS 17 - TIRNAVOS 40100
LARISSA - GREECE
TEL. +30 24920 24240
LARISSA BAR ASSOCIATION
email: katvas9987@yahoo.gr

CERTIFICATE OF REGISTRATION

This is to certify that

KARKANIAS ENVIRONMENTAL TECHNOLOGY S.A.
Industrial Area of Larissa
PC 41004
PO Box 3053
Larissa
Greece

has been audited and found to meet the requirements of standard
OHSAS 18001:2007 Health & Safety Management System

Scope of certification

General Contractor in Design, Construction, Operation and Maintenance of Water Management Liquid and Solid Wastes Projects in which Hydraulic, Electromechanical, Structural, Industrial, Energy Projects, Roads and Ports Construction are included.

012

Certificate number: 796

Issue number: 2017-01

Certificate start date: 19 February 2017

Certificate expiry date: 18 February 2020

Date of initial certification: 19 February 2014

Karen Prendergast
Sector Director - Certification
Exova BM TRADA

Exova (UK) Ltd, (T/A Exova BM TRADA), Chiltern House, Stocking Lane, High Wycombe, Buckinghamshire, HP14 4ND, UK
Registered Office: Exova (UK) Ltd, Lochend Industrial Estate, Newbridge, Midlothian EH28 8PL United Kingdom. Reg No. SC070429.

This certificate remains the property of Exova (UK) Ltd. This certificate and all copies or reproductions of the certificate shall be returned to Exova (UK) Ltd or destroyed if requested. Further clarification regarding the scope of this certificate and verification of the certificate is available through Exova BM TRADA or at the above address or at www.exovabmtrada.com

The use of the UKAS accreditation mark indicates accreditation in respect of those activities covered by the accreditation certification 012

Multisite clients - The scope of certification shown above includes the participating sites shown in appendix A

23/12/18

KARKANIAS
ENVIRONMENTAL TECHNOLOGY S.A.

STATIC SCREEN

Manufacturer General Specifications

Technical data:

Screen material	: AISI 304L
Screen width	: 800 mm
Openings width	: 50 mm

The manually cleaned static screen is used mainly in bypass channels. It is constructed by stainless steel rectangular bars 8 x 20 mm placed in vertical position with suitable space for holding solids. The vertical bars at the bottom and top of them are fastened by transverse bars, which are of the same material and same profile dimension.

The structure comprises special brackets which hold the static screen at an inclined position (angle of 70° approx.). Brackets are also corrosion-resistant with similar material to the static screen.

The construction is accompanied by a stainless steel perforated bin, which is used for collection of screenings, and a rake for removing screenings from the vertical bars of the screen.

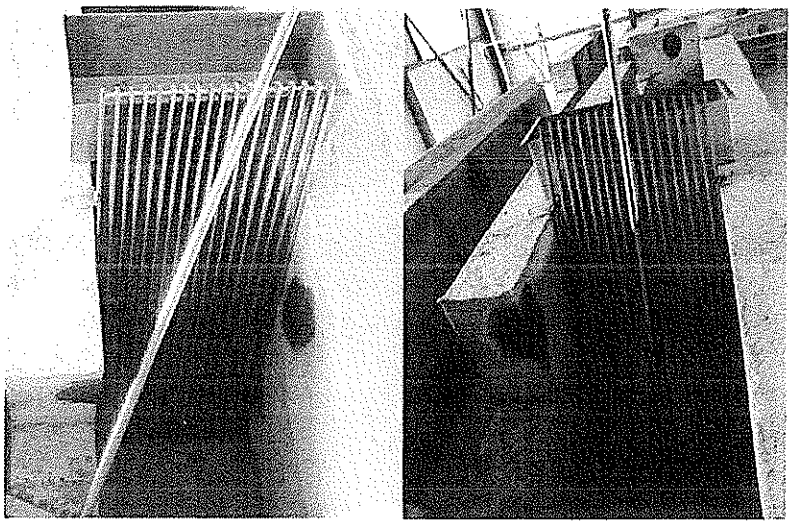

HEADQUARTERS:
Industrial Area of Larisa
Postal Code 41004, BOX 3053 Greece
www.karkanias.gr

Phone: +30 2410 541386
Fax: +30 2410 541354
Email: info@karkanias.gr

Q 3/12/18

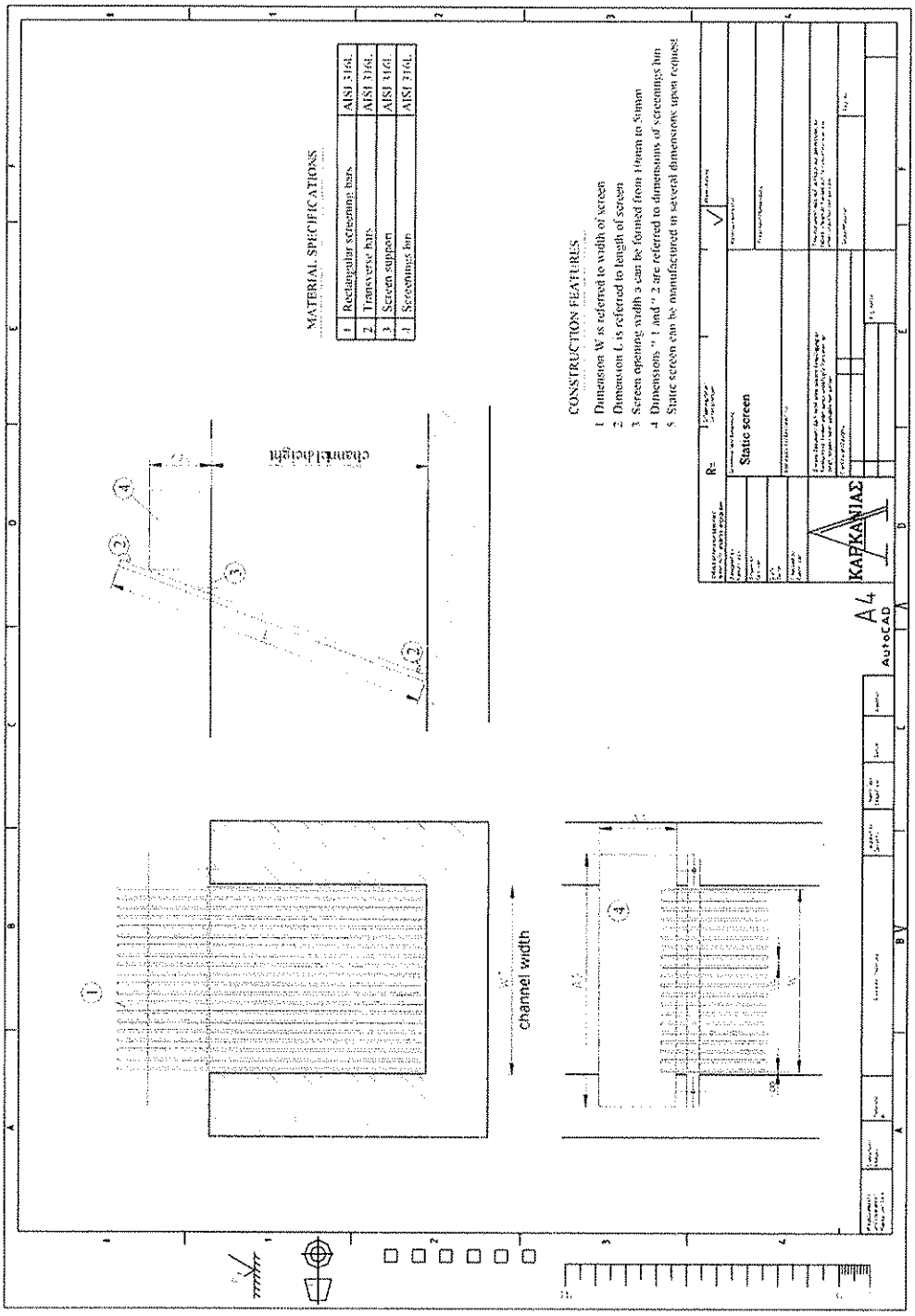

HEADQUARTERS:
Industrial Area of Larisa
Postal Code 41004, BOX 3053 Greece
www.karkanias.gr

Phone: +30 2410 541386
Fax: +30 2410 541354
Email: info@karkanias.gr

3/12/18

KARKANIAS
ENVIRONMENTAL TECHNOLOGY S.A.

SCREW DEWATERER CONVEYOR

Manufacturer General Specifications

Technical data:

Screw length	:	As specified
Spiral diameter	:	300 mm
Spiral cross section	:	20 x 50 mm
Driving unit	:	BONFIGLIOLI RIDUTTORI
Type	:	II 2 G EExe II T3

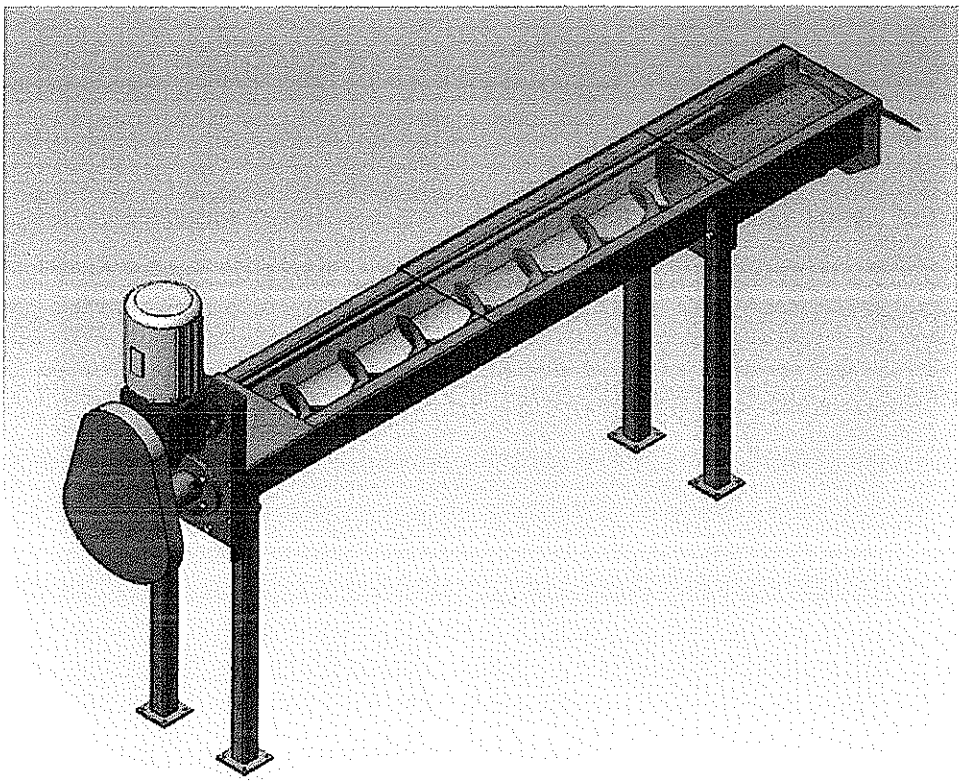

HEADQUARTERS:
Industrial Area of Larisa
Postal Code 41004, BOX 3053 Greece
www.karkanias.gr

Phone: +30 2410 541386
Fax: +30 2410 541354
Email: info@karkanias.gr

3/12/18

KARKANIAS
ENVIRONMENTAL TECHNOLOGY S.A.

Design

The entire screw conveyor is made of stainless steel grade 304L. It consists of a shaftless spiral surrounded by a trough. Between the spiral and the trough is installed appropriate plastic material (Teflon) in order to eliminate friction. The spiral is protected by covers, attached on the trough by means of fastening screws so it can be easily cleaned and maintained. Suitable number of hoppers is installed in order to receive screenings from coarse screens.

The driving unit is connected at the one end of the screw conveyor through a drive shaft which is equipped with double sealing flange. At the other end the compacting chamber is assembled. Compaction is achieved by the mean of a barrier steel plate. Compression plate works as an obstacle during screenings transfer so they can be compressed and free of condensate before discharge to the skip. Drainage water is drained off into a collecting pipe, which will be driven to the drainage system of the plant.

The screw conveyor can be manufactured in alternative stainless steel grade upon costumer request.

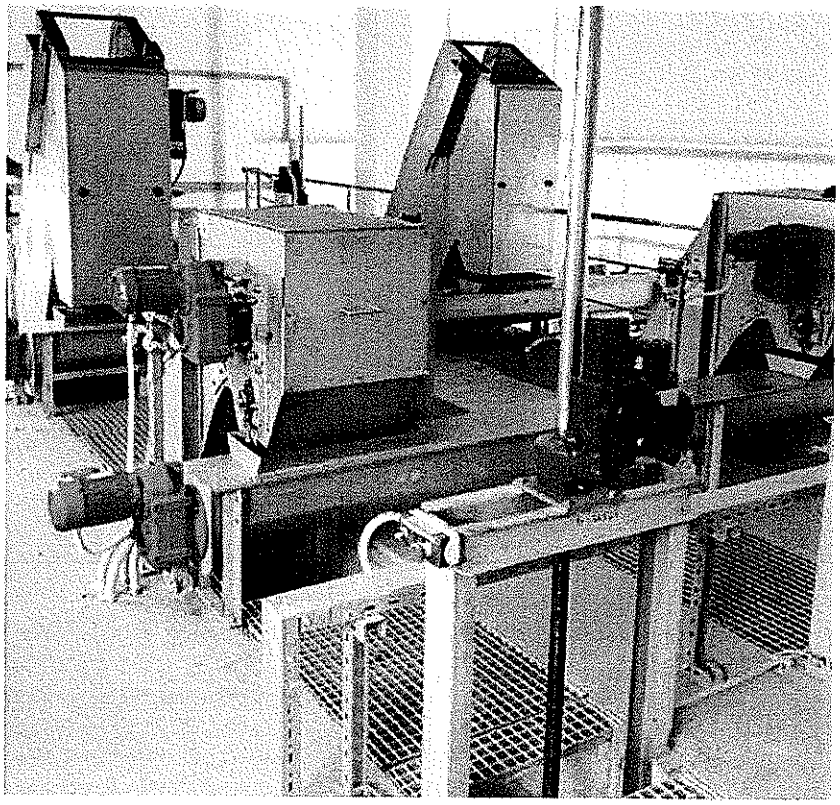

HEADQUARTERS:
Industrial Area of Larisa
Postal Code 41004, BOX 3053 Greece
www.karkanias.gr

Phone: +30 2410 541386
Fax: +30 2410 541354
Email: info@karkanias.gr

3/12/18

KARKANIAS
ENVIRONMENTAL TECHNOLOGY S.A.

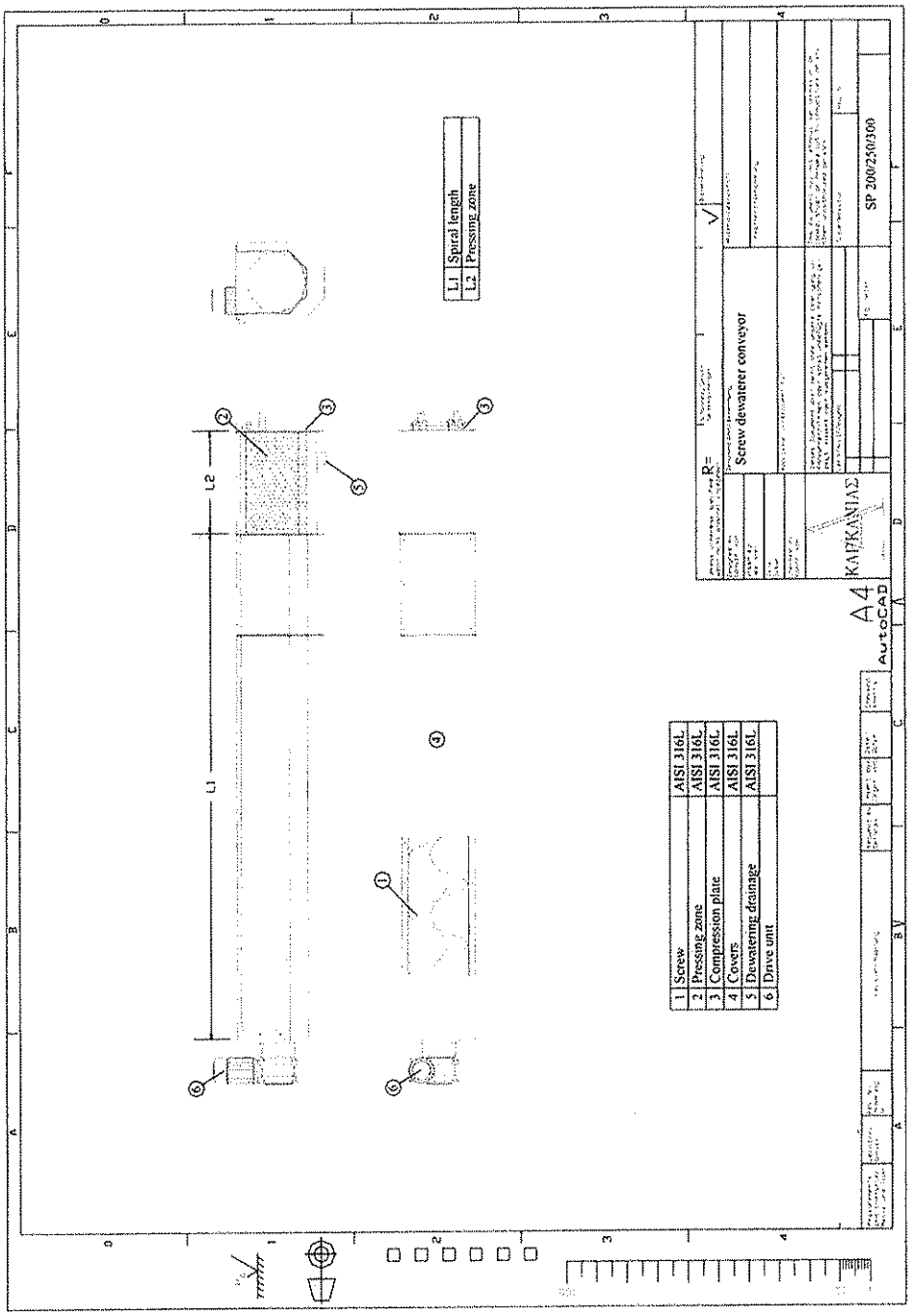

HEADQUARTERS:
Industrial Area of Larisa
Postal Code 41004, BOX 3053 Greece
www.karkanias.gr

Phone: +30 2410 541386
Fax: +30 2410 541354
Email: info@karkanias.gr

3/12/18

© Siemens AG 2016

Overview

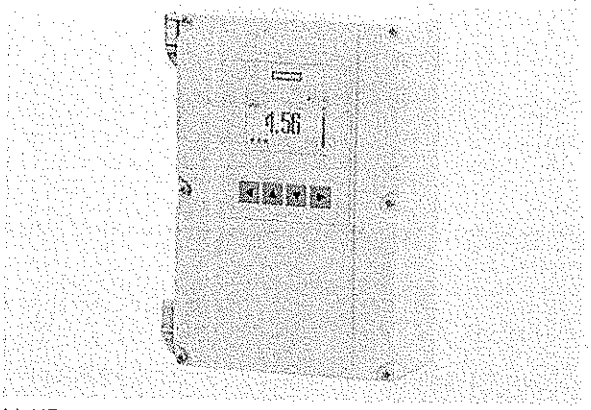

MultiRanger 200 HMI is a versatile short to medium-range ultrasonic single and multi-vessel level monitor/controller for virtually any application in a wide range of industries.

Benefits

- Easy to use HMI display with local four-button programming, menu-driven parameters, and Wizard support for key applications
- English, German, French, Spanish, Chinese, Italian, Portuguese, and Russian texts on the HMI
- Removable terminal blocks for ease of wiring
- Digital input for back-up level override from point level device
- Communication using built-in Modbus RTU via RS 485 and SIMATIC PDM configuration software
- Compatible with SmartLinx system: PROFIBUS DP (cyclic access of process values only) and DeviceNET
- Single or dual point level monitoring
- Auto False-Echo Suppression for fixed obstruction avoidance
- Differential amplifier transceiver for common mode noise reduction and improved signal-to-noise ratio
- Level, volume, and flow measurements in open channels, differential control, extended pump control, and alarm functions
- Wall and panel mounting options

Application

MultiRanger 200 HMI can be used with various materials, including, water, municipal waste, acids, woodchips, or on materials with high angles of repose. MultiRanger 200 HMI offers true dual point monitoring, digital communications with built-in Modbus RTU via RS 485, as well as compatibility with SIMATIC PDM, allowing PC configuration and set-up. MultiRanger 200 HMI features Sonic Intelligence advanced echo-processing software for increased reading reliability.

MultiRanger 200 HMI will monitor open channel flow and features more advanced relay alarming and pump control functions as well as volume conversion.

It is compatible with chemical-resistant EchoMax transducers that are approved for hostile environments.

- Key Applications: wet wells, flumes/weirs, bar screen control, hoppers, chemical storage, liquid storage, crusher bins, dry solids storage

Design

The MultiRanger 200 HMI is available in wall or panel mounting options.

© Siemens AG 2016

Technical specifications

Mode of Operation	
Measuring principle	Ultrasonic level measurement
Measuring range	0.3 ... 15 m (1 ... 50 ft)
Measuring points	1 or 2
Input	
Analog	0 ... 20 mA or 4 ... 20 mA, from alternate device, scalable
Discrete	10 ... 50 V DC switching level Logical 0 ≤ 0.5 V DC Logical 1 = 10 ... 50 V DC max. 3 mA
Output	
EchoMax transducer	44 kHz
Ultrasonic transducer	Compatible transducers: ST-H and EchoMax series XPS-10, XPS-15/15F, and XRS-5
Relays	Rating 5 A at 250 V AC, non-inductive
mA output	0 ... 20 mA or 4 ... 20 mA
• Max. load	750 Ω, isolated
• Resolution	0.1 % of range
Accuracy	
Error in measurement	0.25 % of range or 6 mm (0.24 inch), whichever is greater
Resolution	0.1 % of measuring range[1] or 2 mm (0.08 inch), whichever is greater
Temperature compensation	• -50 ... +150 °C (-58 ... +302 °F) • Integral temperature sensor • External TS-3 temperature sensor (optional) • Programmable fixed temperature values
Rated operating conditions	
Installation conditions	
• Location	Indoor/outdoor
• Installation category	II
• Pollution degree	4
Ambient conditions	
• Ambient temperature (housing)	-20 ... +50 °C (-4 ... +122 °F)

Design	
Weight	
• Wall mount	1.22 kg (2.68 lb)
• Panel mount	1.35 kg (2.97 lb)
Material (enclosure)	Polycarbonate
Degree of protection (enclosure)	
• Wall mount	IP65/Type 4X/NEMA 4X
• Panel mount	IP54/Type 3/NEMA 3
Electrical connection	
• Transducer and mA output signal	2-core copper conductor, twisted, shielded, 0.5 ... 0.75 mm² (22 ... 18 AWG), Belden 8760 or equivalent is acceptable
• Max. separation between transducer and transceiver	365 m (1 200 ft)
Displays and controls	60 x 40 mm (2.36 x 1.57 inch) LCD 240 x 160 pixels resolution
Power supply	
AC version	100 ... 230 V AC ± 15 %, 50/60 Hz, 36 VA (17 W)
DC version	12 ... 30 V DC (20 W)
Certificates and approvals	• CE, RCM[2] • FM, $CSA_{US/C}$, UL • CSA Class I, Div. 2, Groups A, B, C, and D, Class II, Div. 2, Groups F and G, Class III (wall mount only)
Communication	• RS 232 with Modbus RTU or ASCII via RJ-11 connector • RS 485 with Modbus RTU or ASCII via terminal strips • Optional: SmartLinx cards for - PROFIBUS DPV1 (cyclic access of process values only) - DeviceNet

[1] Program range is defined as the empty distance to the face of the transducer plus any range extension
[2] EMC performance available on request

© Siemens AG 2016

Level Measurement

Continuous level measurement - Ultrasonic controllers

MultiRanger 200 HMI

Selection and Ordering data	Article No.
MultiRanger 200 HMI ↗ Versatile short to medium-range ultrasonic single and multi-vessel level monitor/controller for virtually any application in a wide range of industries	7ML5033-
↗ Click on the Article No. for the online configuration in the PIA Life Cycle Portal.	
Versions	
MultiRanger 200, level, volume, flow, and differential measurements ☆	2
Mounting, enclosure design	
4 button HMI, Wall mount, standard enclosure	D
4 button HMI, Wall mount, 4 entries, 4 M20 cable glands included	E
4 button HMI, Panel Mount	F
Input voltage	
100 ... 230 V AC ☆	A
12 ... 30 V DC ☆	B
Number of measurement points	
Single point version ☆	0
Dual point version ☆	1
Data communications (SmartLinx)	
Without module ☆	0
SmartLinx PROFIBUS DPV0 module ☆	2
SmartLinx DeviceNet module ☆	3
SmartLinx PROFIBUS DPV1 module	4
See SmartLinx product page 4/374 for more information.	
Output relays	
6 relays (4 Form A, 2 Form C), 250 V AC ☆	2
Approvals	
General Purpose CE, FM, $CSA_{us/c}$, UL listed, RCM ☆	A
CSA Class I, Div. 2, Groups A, B, C, and D; Class II, Div. 2, Groups F and G; Class III[1] ☆	B

[1] Available with Mounting/Enclosure design options D or E

☆ We can offer shorter delivery times for configurations designated with the Quick Ship Symbol ☆. For details see page 9/5 in the appendix.

Selection and Ordering data	Order code
Further designs	
Please add "-Z" to Article No. and specify Order code(s).	
Stainless steel tag [69 x 50 mm (2.71 x 1.97 inch)]: Measuring-point number/identification (max. 27 characters) specify in plain text ☆	Y15
Test Certificate: Manufacturer's test certificate M to DIN 55350, Part 18 and to ISO 9000	C11
Operating Instructions	Article No.
English	AE535857004
German	A5E36182123
Note: The instruction manual should be ordered as a separate line on the order.	
All literature is available to download for free, in a range of languages, at http://www.siemens.com/processinstrumentation/documentation	
This device is shipped with the Siemens Level and Weighing manual DVD containing the complete ATEX Quick Start and instruction manual library.	
Other Operating Instructions	
SmartLinx PROFIBUS DPV1, English	A5E36197302
SmartLinx PROFIBUS DPV1, German	A5E36197305
SmartLinx PROFIBUS DP, English	7ML1998-1AQ03
SmartLinx PROFIBUS DP, German	7ML1998-1AQ33
SmartLinx DeviceNet, English	7ML1998-1BH02
Note: The appropriate SmartLinx Operating Instructions should be ordered as a separate line on the order.	
All literature is available to download for free, in a range of languages, at http://www.siemens.com/processinstrumentation/documentation	
Optional equipment	
Tag, stainless steel, 12 x 45 mm, one text line, suitable for enclosures	7ML1930-1AC
Sun-shield, 304 Stainless steel	7ML1930-1GA
USB to RS 232 adapter	7ML1930-6AK
RS 232 to RJ11 COMMS adapter	7ML1830-1MC
SITRANS RD100, loop powered display - see Chapter 7	7ML5741-...
SITRANS RD200, universal input display with Modbus conversion - see Chapter 7	7ML5740-...
SITRANS RD300, dual line display with totalizer and linearization curve and Modbus conversion - see Chapter 7	7ML5744-...
SITRANS RD500 web, universal remote monitoring solution for instrumentation - see Chapter 7	7ML5750-...
Spare parts	
Power Supply Board (100 ... 230 V AC)	7ML1830-1MD
Power Supply Board (12 ... 30 V DC)	7ML1830-1ME
Spare lid with HMI, MultiRanger 200 HMI/ HydroRanger 200 HMI, wall	A5E35778738
Spare lid with HMI, MultiRanger 200 HMI/ HydroRanger 200 HMI, panel	A5E35778740
SmartLinx PROFIBUS DP V1 module	A5E35778741

☆ We can offer shorter delivery times for configurations designated with the Quick Ship Symbol ☆. For details see page 9/5 in the appendix.

3/12/18

© Siemens AG 2016

Dimensional drawings

Panel mount dimensions

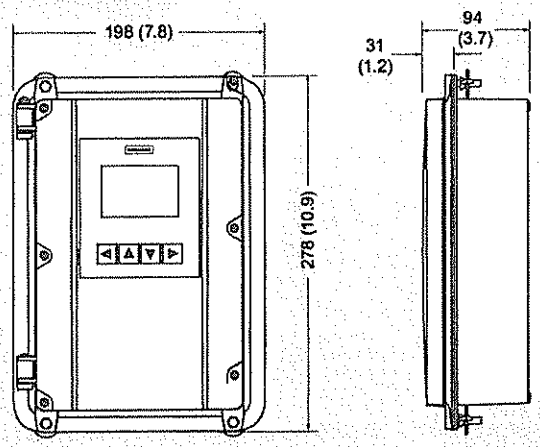

Wall mount dimensions

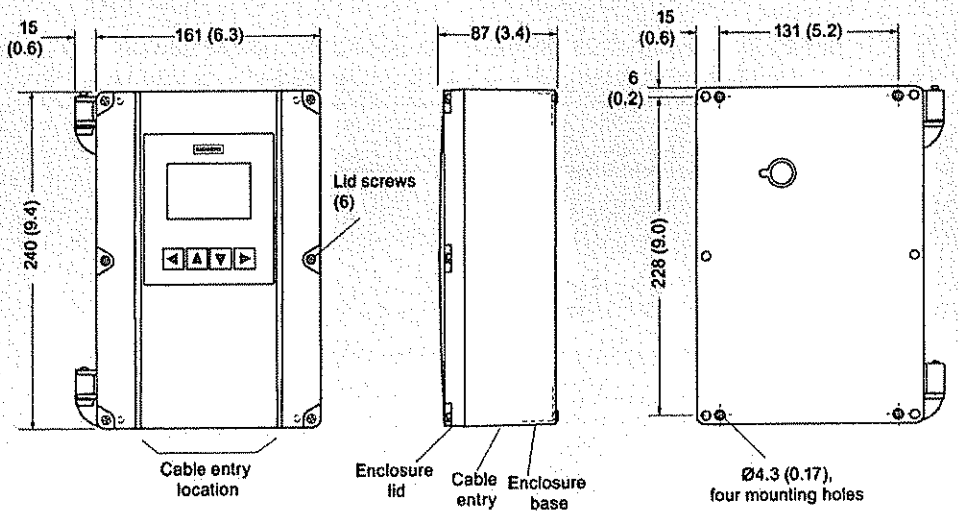

MultiRanger 200 HMI, dimensions in mm (inch)

Q3/12/18

© Siemens AG 2016

Level Measurement

Continuous level measurement - Ultrasonic controllers

Schematics

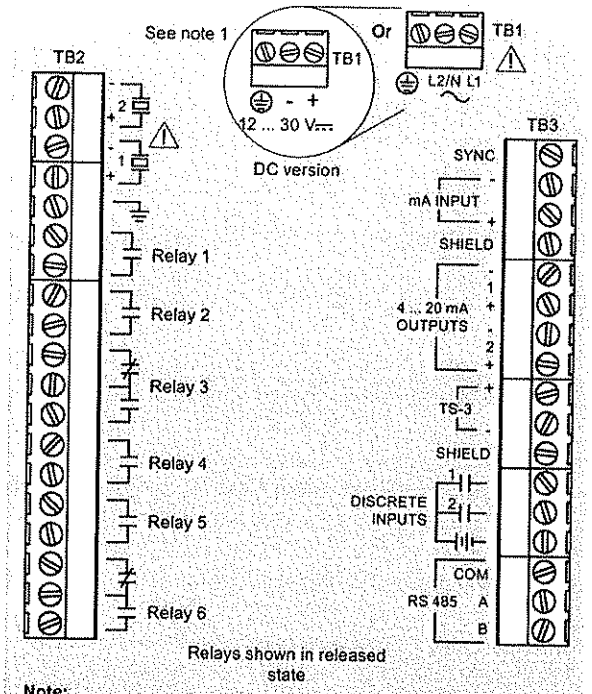

Note:

1. Use 2-core copper wire, twisted, with shield, for expansion up to 365 m (1 200 ft). Route cable in grounded metal conduit, separate from other cables.
2. Verify that all system components are installed in accordance with instructions.
3. Connect all cable shields to the MultiRanger shield connections. Avoid differential ground potentials by not connecting cable shields to ground (earth) anywhere else.
4. Keep exposed conductors on shielded cables as short as possible to reduce noise on the line caused by stray transmissions and noise pickup.

MultiRanger 200 HMI connections

© Siemens AG 2015

Level Measurement
Continuous level measurement - Ultrasonic transducers

Overview

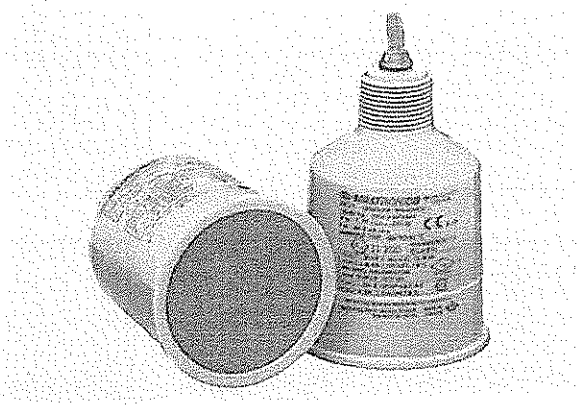

EchoMax XRS-5 ultrasonic transducer provides reliable, continuous level monitoring of liquids and slurries in narrow lift stations/ wet wells, flumes, weirs and filter beds using a beam angle of just 10° and a CSM rubber face.

Benefits

- Narrow beam angle of only 10°
- Chemically resistant PVDF copolymer enclosure and CSM rubber face
- Measuring range: 8 m (26 ft) for measurement of liquids and slurries
- Fully submersible: IP68 degree of protection
- Easy installation with 1" NPT or R 1" BSPT connection

Application

The XRS-5 is non-contacting with a measuring range from 0.3 ... 8 m (1 ... 26 ft). Advanced echo processing ensures reliable data even in conditions with obstructions, turbulence and foam.

The hermetically sealed CSM rubber face and the PVDF copolymer enclosure are designed for maximum resistance to methane, salt water, caustics and harsh chemicals common to wastewater installations. With an IP68 degree of protection, this rugged sensor is fully submersible in the event of flood conditions. Use a submergence shield if full submergence is possible in the application. A submergence shield will maintain a high level reading output during submerged conditions.

The low-cost XRS-5 transducer is compatible with a full range of Siemens controllers, from a basic system for high/low alarm or simple pump control, up to advanced control systems with communications, telemetry and SCADA integration capabilities.

- Key Applications: wet wells, flumes, weirs, filter beds

Technical specifications

Mode of operation	
Measuring principle	Ultrasonic transducer
Input	
Measuring range	0.3 ... 8 m (1 ... 26 ft), dependent on application
Output	
Frequency	44 kHz
Beam angle	10°
Accuracy	
Temperature error	Compensated by integral temperature sensor
Rated operating conditions	
Vessel pressure	Normal atmospheric pressure
Ambient conditions	
• Ambient temperature	-20 ... +65 °C (-4 ... +149 ° F)
Design	
Weight (approximate shipping weight of sensor with standard cable length)	1.2 kg (2.6 lb)
Material (enclosure)	PVDF copolymer enclosure and CSM face
Process connection	1" NPT [(Taper), ANSI/ASME B1.20.1] or R 1" [(BSPT), EN 10226]
Degree of protection	IP65/IP68
Cable connection	2-core shielded/twisted, 0.5 mm^2 (20 AWG), PVC sheath
Cable (max. length)	• 365 m (1 200 ft) with RG 62 A/U coaxial cable • 365 m (1 200 ft) with 2-core twisted pair, foil shield, 0.5 mm^2 (20 AWG), PVC sheath, only for MultiRanger 100/200
Options	
Flange version	Factory flange with PTFE face for ASME, EN or JIS configuration
Submergence shield	For applications with flooding possible
Certificates and approvals	CE, RCM, KCC CSA Class I, Div. 2, Groups A,B,C,D. Class II, Div. 1 Groups E,F,G FM Class I, Zone 1, AEx m IIC, T6 Class II, III, Div. 1, Groups E,F,G T6 ATEX II 2GD / IECEx / INMETRO Ex mb IIC T6 Gb, Ex tb IIIC T85 °C Db

Q 3/12/18

© Siemens AG 2015

Selection and Ordering data		Article No.
EchoMax XRS-5 transducer	↗	**7ML1106-**
With a beam angle of 10°, the XRS-5 provides reliable, continuous level monitoring of liquids and slurries in narrow lift stations/wet wells, flumes, weirs and filter beds. Measuring range: min. 0.3 m (1 ft), max. 8 m (26 ft)		**0 - 0**
↗ Click on the Article No. for the online configuration in the PIA Life Cycle Portal.		
Process connection		
1" NPT [(Taper), ANSI/ASME B1.20.1]	✆	**1**
R 1" [(BSPT), EN 10226]	✆	**2**
Cable length		
5 m (16.40 ft)	✆	**A**
10 m (32.81 ft)	✆	**B**
30 m (98.43 ft)		**C**
Facing		
Standard (CSM rubber)	✆	**A**
PTFE (flange versions)		**B**
Approvals		
CE, RCM, KCC, CSA Class I, Div. 2, Groups A,B,C,D, Class II, Div. 1 Groups E,F,G FM Class I, Zone 1, AEx m IIC, T6 Class II, III, Div. 1, Groups E,F,G T6 ATEX II 2GD / IECEx / INMETRO Ex mb IIC T6 Gb, Ex tb IIIC T85 °C Db	✆	**2**
Mounting flange (flush mount)		
None	✆	**A**
3" ASME, 150 lb, flat faced		**B**
4" ASME, 150 lb, flat faced		**C**
6" ASME, 150 lb, flat faced		**D**
DN 80, PN 10/16, Type A, flat faced		**J**
DN 100, PN 10/16, Type A, flat faced		**K**
DN 150, PN 10/16, Type A, flat faced		**L**
JIS10K 3B style		**Q**
JIS10K 4B style		**R**
JIS10K 6B style		**S**
Note: Flange bolting patterns and facings dimensionally correspond to the applicable ASME B16.5 or EN 1092-1, or JIS B 2220 standard.		

Operating Instructions	Article No.
Quick Start Manual, multi-language	**A5E32299685**
Applications Guidelines, multi-language	**7ML1998-5HV61**
Note: The Applications Guidelines should be ordered as a separate line item on the order.	
This device is shipped with the Siemens Milltronics manual DVD containing the ATEX Quick Start and Operating Instructions library.	

✆ We can offer shorter delivery times for configurations designated with the Quick Ship Symbol ✆. For details see page 9/5 in the appendix.

Selection and Ordering data	Order code
Further designs	
Please add "**-Z**" to Article No. and specify Order code(s).	
Acrylic coated, stainless steel tag [13 x 45 mm (0.5 x 1.75 inch)]: Measuring-point number/ identification (max. 16 characters) specify in plain text	✆ **Y17**

Accessories	Article No.
Tag, stainless steel with hole, 12 x 45 mm (0.47 x 1.77 inch), one text line for fastening on sensors	**7ML1930-1BJ**
Submergence shield kit	**7ML1830-1BH**
Easy Aimer 2, aluminum, NPT with ¾" x 1" PVC coupling	**7ML1830-1AQ**
Easy Aimer 2, aluminum with M20 adapter and 1" and 1½" BSPT aluminum couplings	**7ML1830-1AX**
Easy Aimer 304, NPT with 1" stainless steel coupling	**7ML1830-1AU**
Easy Aimer 304, with M20 adapter and 1" and 1½" BSPT 304 stainless steel couplings	**7ML1830-1GN**
FMS-200 universal box bracket, mounting kit	**7ML1830-1BK**
FMS-210 channel bracket, wall mount	**7ML1830-1BL**
FMS-220 extended channel bracket, wall mount	**7ML1830-1BM**
FMS-310 channel bracket, floor mount	**7ML1830-1BN**
FMS-320 extended channel bracket, floor mount	**7ML1830-1BP**
FMS-350 bridge channel bracket, floor mount (see Mounting Brackets on page 4/187 for more information)	**7ML1830-1BQ**
1" NPT locknut, plastic	**7ML1830-1DS**
1" BSPT locknut, plastic	**7ML1830-1DR**

✆ We can offer shorter delivery times for configurations designated with the Quick Ship Symbol ✆. For details see page 9/5 in the appendix.

Q 3/12/18

© Siemens AG 2015

Selection and Ordering data		Article No.
EchoMax XRS-5C transducer With a beam angle of 10°, the XRS-5 provides reliable, continuous level monitoring of liquids and slurries in narrow lift stations/wet wells, flumes, weirs and filter beds. Measuring range: min. 0.3 m (1 ft), max. 8 m (26 ft) ↗ Click on the Article No. for the online configuration in the PIA Life Cycle Portal.	↗	**7ML1105-** **1 - 0**
Process connection 1" NPT [(Taper), ANSI/ASME B1.20.1]	☆	**1**
Cable length 5 m (16.40 ft) 10 m (32.81 ft) 30 m (98.43 ft)	☆ ☆	**A** **B** **C**
Facing Standard (CSM rubber) PTFE (flange versions)	☆	**A** **B**
Approvals CSA Class I Div. 1, Groups A,B,C,D; Class II Div. 1, Groups E,F,G; Class III	☆	**1**
Mounting flange (flush mount) None 3" ASME, 150 lb, flat faced 4" ASME, 150 lb, flat faced 6" ASME, 150 lb, flat faced Note: Flange bolting patterns and facings dimensionally correspond to the applicable ASME B16.5 or EN 1092-1, or JIS B 2220 standard.	☆	**A** **B** **C** **D**
Operating Instructions		Article No.
Quick Start Manual, multi-language		**A5E32299685**
Applications Guidelines, multi-language Note: The Applications Guidelines should be ordered as a separate line item on the order. This device is shipped with the Siemens Milltronics manual DVD containing the ATEX Quick Start and Operating Instructions library.		**7ML1998-5HV61**

☆ We can offer shorter delivery times for configurations designated with the Quick Ship Symbol ☆. For details see page 9/5 in the appendix.

Selection and Ordering data		Order code
Further designs Please add **"-Z"** to Article No. and specify Order code(s).		
Acrylic coated, stainless steel tag [13 x 45 mm (0.5 x 1.75 inch)]: Measuring-point number/ identification (max. 16 characters) specify in plain text	☆	**Y17**

Accessories	Article No.
Submergence shield kit	**7ML1830-1BH**
Easy Aimer 2, aluminum, NPT with ¾" x 1" PVC coupling	**7ML1830-1AQ**
Easy Aimer 304, NPT with 1" stainless steel coupling	**7ML1830-1AU**
FMS-200 universal box bracket, mounting kit	**7ML1830-1BK**
FMS-210 channel bracket, wall mount	**7ML1830-1BL**
FMS-220 extended channel bracket, wall mount	**7ML1830-1BM**
FMS-310 channel bracket, floor mount	**7ML1830-1BN**
FMS-320 extended channel bracket, floor mount	**7ML1830-1BP**
FMS-350 bridge channel bracket, floor mount (see Mounting Brackets on page 4/187 for more information)	**7ML1830-1BQ**

☆ We can offer shorter delivery times for configurations designated with the Quick Ship Symbol ☆. For details see page 9/5 in the appendix.

Q 3/12/18

© Siemens AG 2015

Dimensional drawings

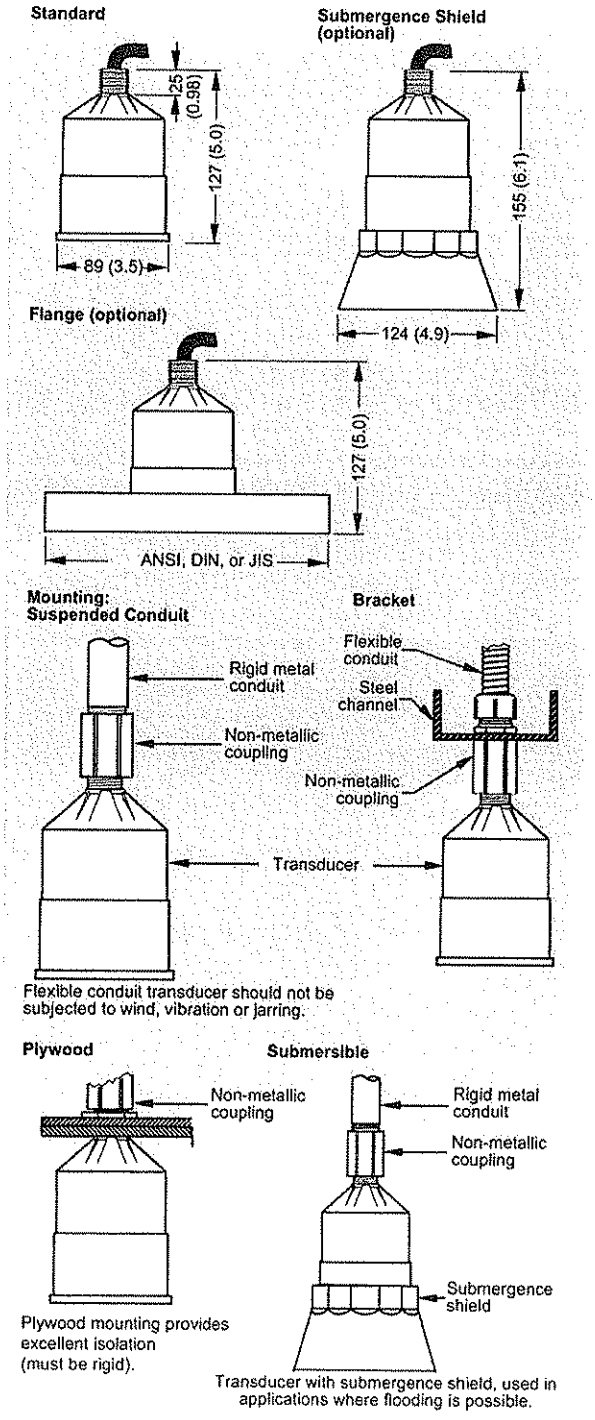

XRS-5 ultrasonic transducer, dimensions in mm (inch)

Schematics

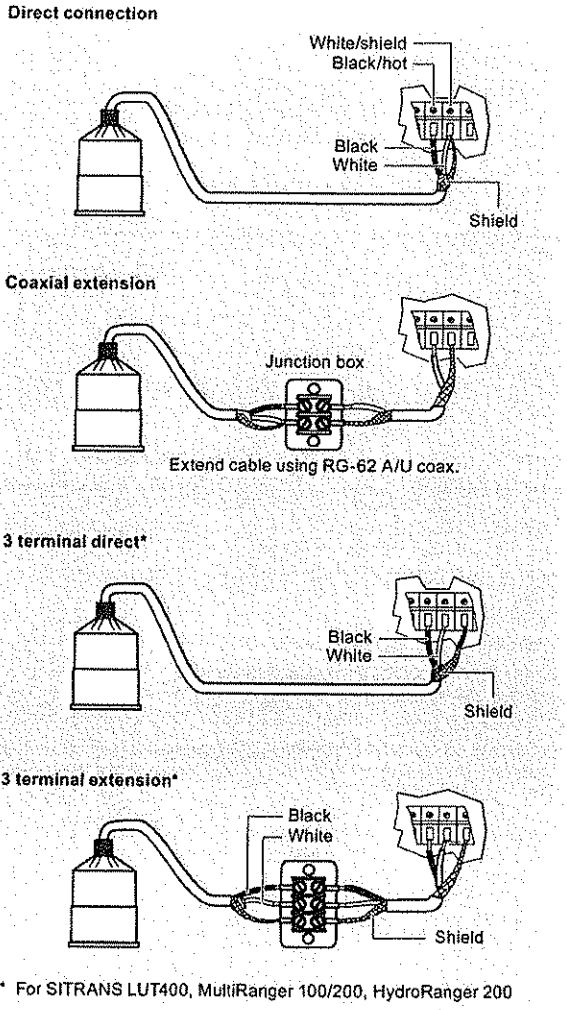

* For SITRANS LUT400, MultiRanger 100/200, HydroRanger 200

XRS-5 ultrasonic transducer connections

Έργο: Ημερ/νία: 2017-09-06
Αριθμός Έργου: Συντάκτης:

Τεχνικά στοιχεία

Υποβρύχια αντλία λυμάτων Rexa PRO C08 DA-435 / EAD1X2-T0039-540-O

Αντλία							
Τύπος αντλίας		PROC08 D A - 435		Είδος εγκατάστασης		Einhöngevorrichtung DN80/2RK	
Πτερωτή (διάμ.)	Μέγ. Δυνατή	135	mm				
	Τυπικό (βασικό)	135	mm	Ελεύθερο πέρασμα		65	mm
	Σχεδιασμ.	135	mm	Στόμιο αναρ.	Βαθμ. PN	PN10	
	Ελάχ. Δυνατή	135	mm		Ονομ. διάμ.	DN80	
Ονομαστ. αριθμός στροφών		2900	1/min		Πρότυπο	WILO-S	
Συχνότητα		50	Hz	Στόμιο κατάθλ.	Βαθμ. PN	PN10	
Τύπος πτερωτής		Μονοκάναλη			Ονομ. διάμ.	DN80, Size 3	
Κατασκευή πτερωτής		Κλειστή			Πρότυπο	WILO-D	

Βάρη				
Βάρος υδραυλ. τμήματος αντλίας	Μέγ. 13,1	kg	Βάρος συγκροτήματος	Μέγ. 55,1 kg
Βάρος κινητήρα	42	kg		

Υλικά κατασκευής			
Κέλυφος αντλίας	EN-GJL-250		
Πτερωτή	EN-GJL 250		
Δακτύλ. διαρροής	1.4308		

Κινητήρας				
Ονομασία κινητήρα	P 13.2-15/EAD1X2-T-L01		Αριθμός πόλων	2
Ονομ. ισχύς	3,9	kW	Ονομαστ. ταχύτ. Περιστροφής	2879 1/min
Απορρόφηση ισχύος σε Ονομ. ισχύ				4,85 kW
Ονομ. τάση				400 ~3 V
Απορρόφ. ρεύματος στην ονομ. ισχύ				8,5 A
Βαθμός απόδ. στην ονομ. ισχύ				81 %
συνφ στην Ονομ. ισχύ	0,82		Ονομ. συχνότητα	50 Hz
συνφ εκκίνησης	0,5		Είδος λειτουργίας: υγρή	S1
Ρεύμα εκκίνησης DOL	56	A	Είδος λειτουργίας: ξηρή	S2 30, S3 25%
Ρεύμα εκκίνησης Y/Δ	18,5	A	Μέγ. θερμοκρασία ρευστού	313 K
Ροπή στρέψης εκκίνησης	25	Nm	Μέγ. αριθμ. ωριαίων εκκιν.	50
Ροπή αδράνειας μάζας	0,0026	kg m²	Βαθμός προστασίας	IP 68
Επιλεγμ. αντιεκρ. Προστασία	ATEX		Αριθμός Ex	BVS 11 ATEX E 119 X
Σήμανση Ex	II 2G Ex db IIB T4 Gb			
Καλώδιο σύνδεσης κινητήρα			7G1,5 H07RN-F	

Στοιχεία σημείου λειτουργίας						
Παροχή		51,4	m³/h	Ρευστό μέσον		Νερό, καθαρό
Μαν. ύψος		15,6	m	Τιμή NPSH της αντλίας		m
Ισχύς στον άξονα	P_2	3,1	kW	Ταχύτητα περιστροφής		2897 1/min
Βαθμός απόδ. Αντλίας		70,4	%	Ολικός βαθμός απόδοσης		$= \frac{P_2 * \text{Βαθμός απόδ. Αντλίας}}{P_1}$
Απορροφώμενη ισχύς	P_1	3,8	kW			
Μέγ. παροχή	78,8 m³/h	Μαν. ύψος σε Μέγ. Παροχή	11,9 m	Μαν. ύψος σε μηδεν. παροχή	25,2 m	
Σημείο βέλτ. Απόδ. Q (ΣΒΑ)	63,6	m³/h	Σημείο βέλτιστης απόδοσης H (ΣΒΑ)		m	
Νο είδους	6078113					

3/12/19

Έργο:
Αριθμός Έργου:

Ημερ/νία: 2017-09-06
Συντάκτης:

wilo

Τεχνικά στοιχεία

Υποβρύχια αντλία λυμάτων Rexa PRO C08 DA-435 / EAD1X2-T0039-540-O

Τεχνική περιγραφή
Υποβρύχια αντλία λυμάτων, ως υποβρύχιο συγκρότημα με κινητήρα, για σταθερή, κατακόρυφη τοποθέτηση, για άντληση ανεπεξέργαστων χημικά και μηχανικά μη διαβρωτικών για την αντλία, λυμάτων. Ακτινικά διατεταγμένο στόμιο κατάθλιψης και αξονική αναρρόφηση. Το συγκρότημα είναι κατασκευασμένο με τρόπο εύκολο για τη συντήρηση. Οι παροχές πρέπει να εξασφαλίζονται κατά ISO 9906 Παρ. A.

3/12/18

Έργο: Ημερ/νία: 2017-09-06
Αριθμός Έργου: Συντάκτης:

wilo

Καμπύλες απόδοσης

Υποβρύχια αντλία λυμάτων Rexa PRO C08 DA-435 / EAD1X2-T0039-540-O

Στοιχεία ισχύος σε σχέση με: Νερό, καθαρό [100%] ; 293K; 998,19kg/m³; 1,0004mm²/s
Απόκλιση κατά ISO 9906 / Παράρτημα A.2

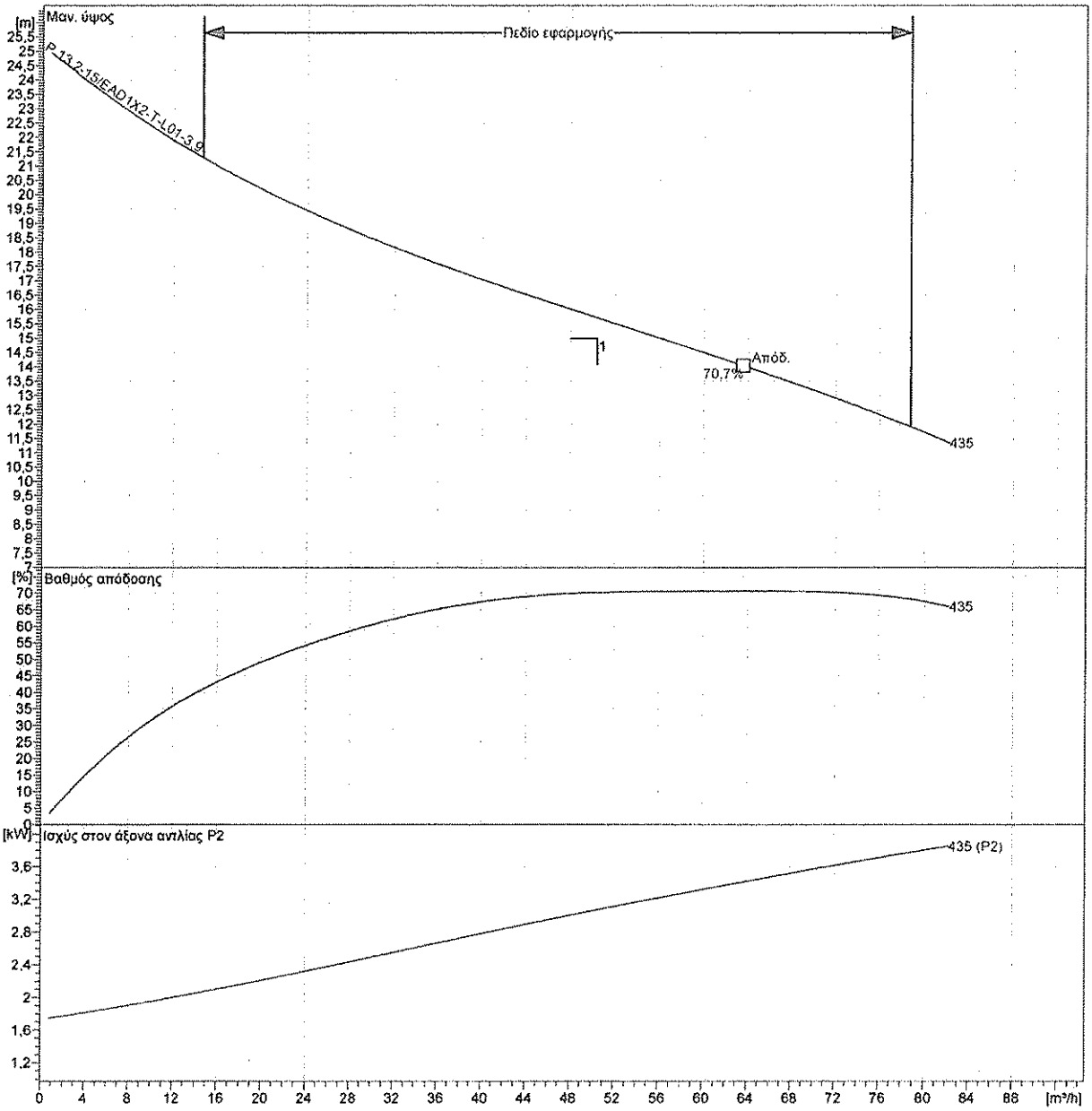

Αντλία			Στοιχεία σημείου λειτουργίας		
Πτερωτή (διάμ.) Σχεδιασμ.	135	mm	Παροχή	51,4	m³/h
Ονομαστικός αριθμός στροφών	2900	1/min	Μαν. ύψος	15,6	m
Συχνότητα	50	Hz	Ισχύς στον άξονα P_2	3,1	kW
Τύπος πτερωτής	Μονοκάναλη		Βαθμός απόδ. Αντλίας	70,4	%
Κινητήρας			Απορροφώμενη ισχύς P_1	3,8	kW
Ονομ. ισχύς	3,9	kW	Τιμή NPSH της αντλίας		m
Επιλεγμ. αντιεκρ. Προστασία	ATEX		Ταχύτητα περιστροφής	2897	1/min

3/12/18

Έργο: Ημερ/νία: 2017-09-06
Αριθμός Έργου: Συντάκτης:

wilo

Τεχνικά στοιχεία

Υποβρύχια αντλία λυμάτων — Rexa PRO C08 DA-435 / EAD1X2-T0039-540-O

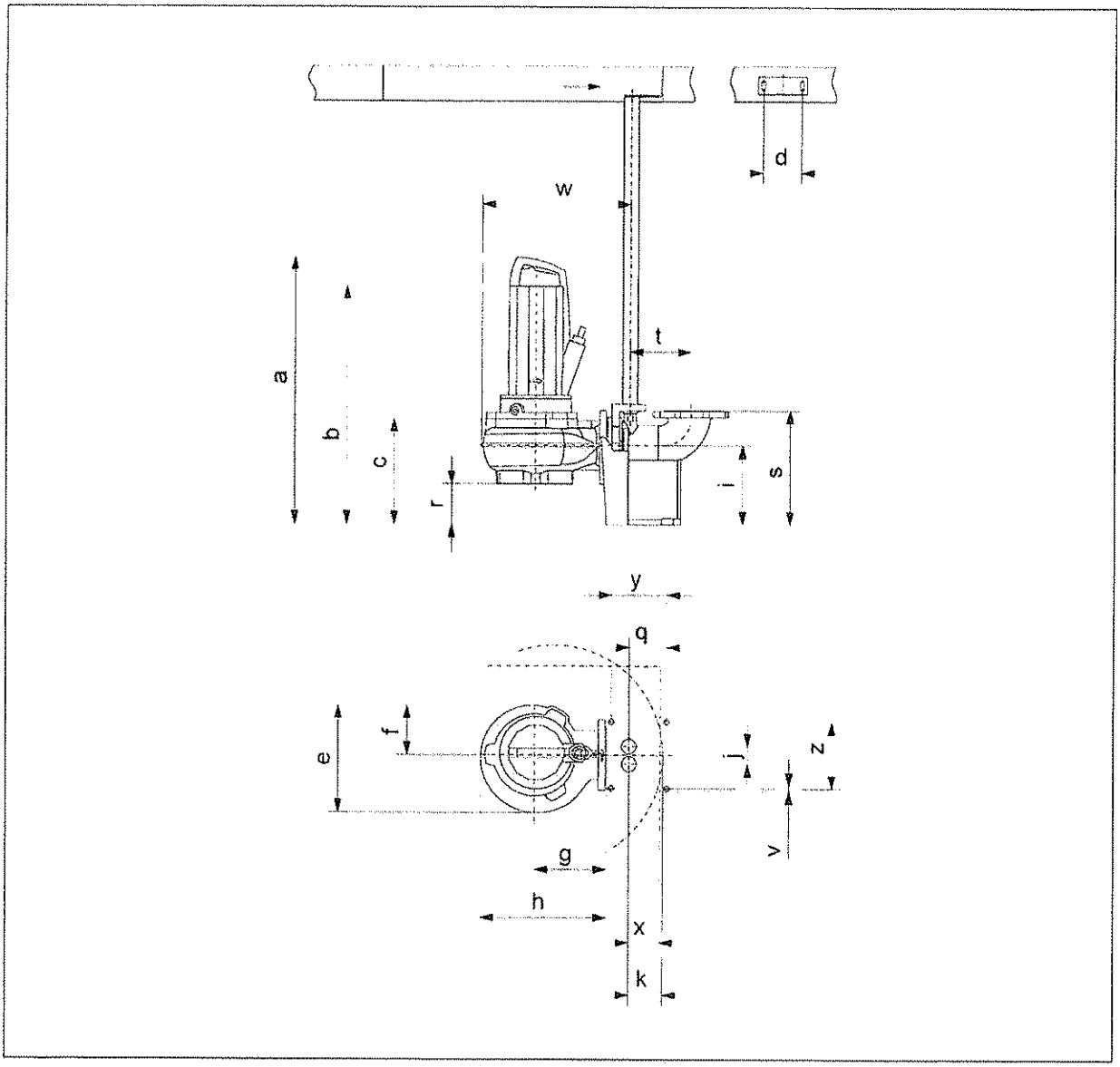

Διαστάσεις σε mm				Συνδέσεις
a	731	r	119	Στόμιο αναρ. DN80 PN10
b	648	s	300	
c	268	t	166	
d	110	v	15	
e	235	w	417	Στόμιο κατάθλ. DN80, Size 3, cutoff PN10
f	124	x	90	
g	150	y	120	
h	268	z	170	
i	210			Einhõngevorrichtung DN80/2RK
j	50			
k	95			
q	69			

3/12/18

Έργο: Ημερ/νία: 2017-09-06
Αριθμός Έργου: Συντάκτης:

Στοιχεία κινητήρα

P 13.2-15/EAD1X2-T-L01-3,9 3,9 kW 400 V 50Hz 3~

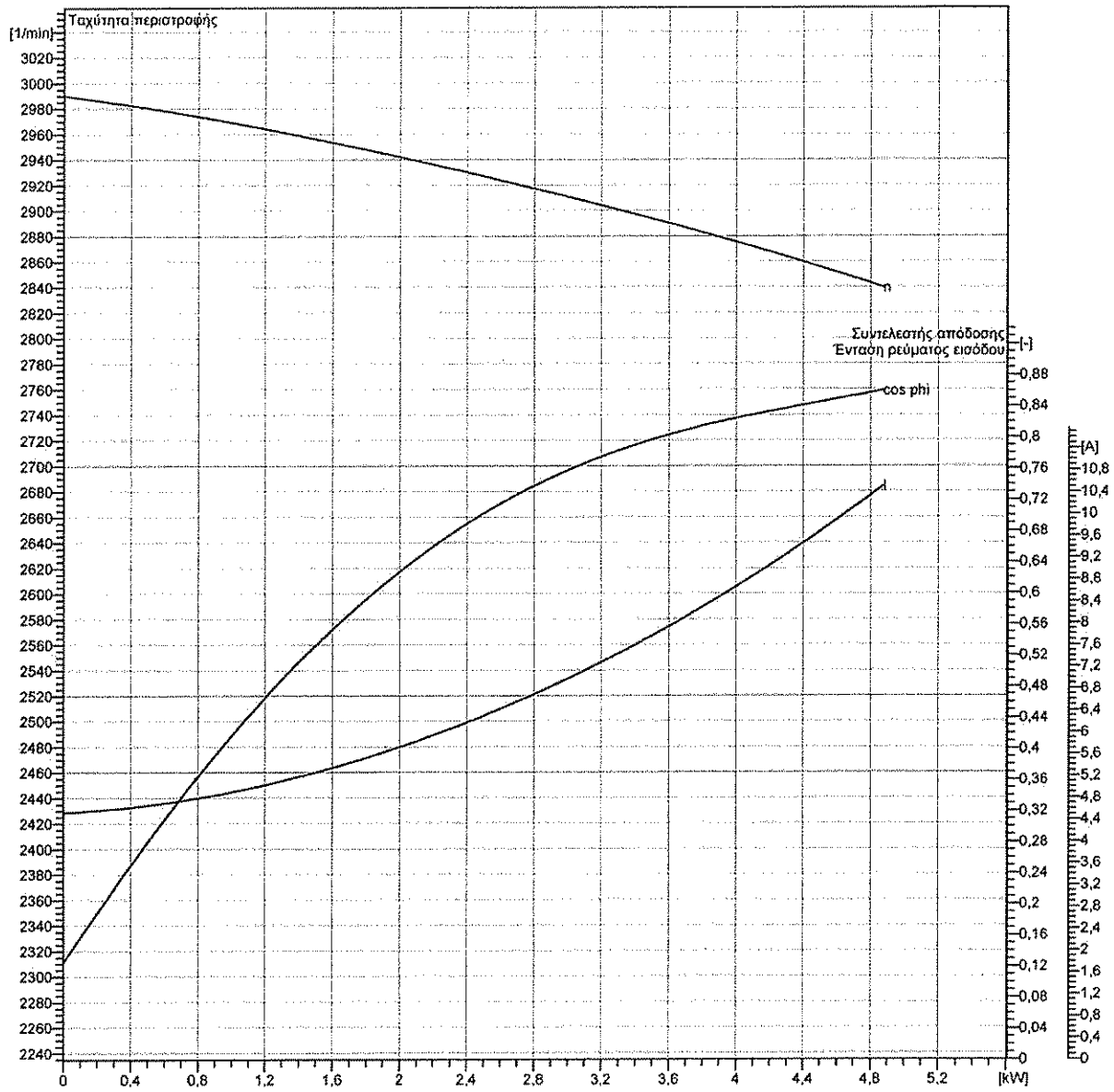

Στοιχεία εφαρμογής			Στοιχεία κινητήρα		
Είδος υποβρύχιας λειτουργίας	S1		Απορρόφηση ισχύος σε Ονομ. ισχύ	4,85	kW
Είδος λειτουργίας: ξηρή	S2 30, S3 25%		Ονομ. ισχύς	3,9	kW
Συντελεστής Service	1		Ονομαστ. ταχύτ. Περιστροφής	2879	1/min
Μέγ. θερμοκρασία ρευστού	313	K	Απορρόφ. ρεύματος στην ονομ. ισχύ	8,5	A
Αντιεκρηκτική προστασία			Μέγ. αριθμ. ωριαίων εκκιν.	50	
Επιλεγμ. αντιεκρ. Προστασία	ATEX		Βάρος κινητήρα	42	kg
Αριθμός Ex	BVS 11 ATEX E 119 X		Βαθμός απόδ. στην ονομ. ισχύ	81	%
Σήμανση Ex	II 2G Ex db IIB T4 Gb		συνφ στην Ονομ. ισχύ	0,82	
Καλώδιο σύνδεσης κινητήρα			Ρεύμα εκκίνησης DOL	56	A
Καλώδιο σύνδ. κινητ.για εκκίνηση DOL	7G1,5 H07RN-F		συνφ εκκίνησης	0,5	
Καλώδιο σύνδ. κινητ. για εκκίνηση Υ/Δ			Ροπή στρέψης εκκίνησης	25	Nm
Μέγ. δυνατό καλ. σύνδ. Κινητήρα	7x1,5	mm²	Ροπή αδράνειας μάζας	0,0026	kg m²

3/12/18

SIEMENS

SINAMICS G120C

The compact and versatile inverter with optimum functionality

siemens.com/sinamics-g120c

Answers for industry.

3/12/10

The compact inverter for countless applications

The SINAMICS G120C defines new standards in its class regarding size, fast commissioning, extremely simple operator control, high level of service-friendliness and highly integrated functionality.

It is predestined for machinery construction and sales through distribution channels and covers the requirements of many applications, e.g. for conveyor belts, mixers, extruders, pumps, fans, compressors and basic handling machines.

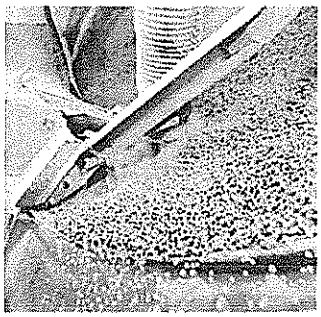

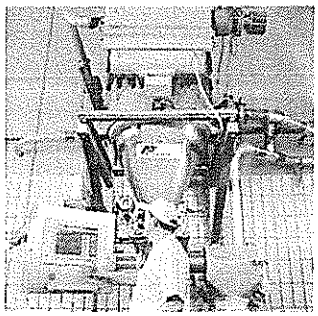

SINAMICS offers a whole raft of advantages:

- Standard operator control and functionality as a result of the common hardware and software platform
- Both low voltage as well as medium voltage
- A common engineering approach for all drives
  - SIZER for engineering
  - STARTER for parameterization and commissioning
- High degree of flexibility and combinability
- Identical options
- Minimized training costs

Decisive advantages for machinery construction

SINAMICS G120C was specifically designed for OEMs who require a cost-effective, space-saving inverter that is simple to operate and has a broad range of functions. This drive unit is especially compact with a high power density and sets itself apart as a result of its fast installation and commissioning, user-friendly connections and simple commissioning tools. Already integrated: Safety functions (STO via terminal/with PROFIsafe), drive networking via standard fieldbus systems as well as a card slot for cloning parameter sets.

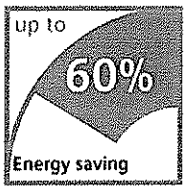

With three frame sizes, SINAMICS G120C covers a range of power ratings from 0.55 kW up to 18.5 kW. To increase the energy efficiency, the inverter is equipped with vector control to achieve optimum energy efficiency and/or has automatic flux reduction. The device is an integral component of Totally Integrated Automation and has PROFINET, PROFIBUS DP, USS/Modbus RTU as well as CANopen communication interfaces. Operation/commissioning is quickly and simply realized with a PC via USB or using the BOP-2 (Basic Operator Panel) or IOP (Intelligent Operator Panel).

SINAMICS G120C is part of the SINAMICS family

SINAMICS G120C is a member of the seamless and integrated family of SINAMICS drives – the first choice for innovative drive solutions that are fit for the future. SINAMICS offers the optimum drive for each and every application. As a consequence, all of the drives can be configured, parameterized, commissioned and operated in a standard fashion.

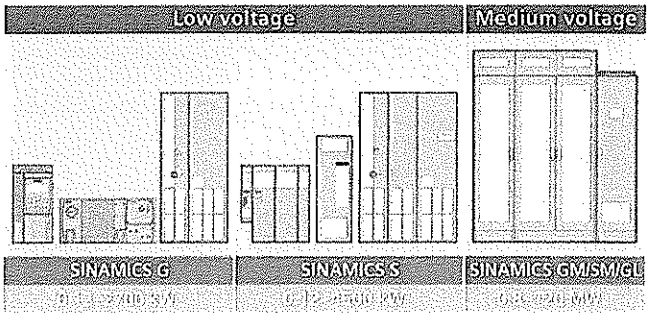

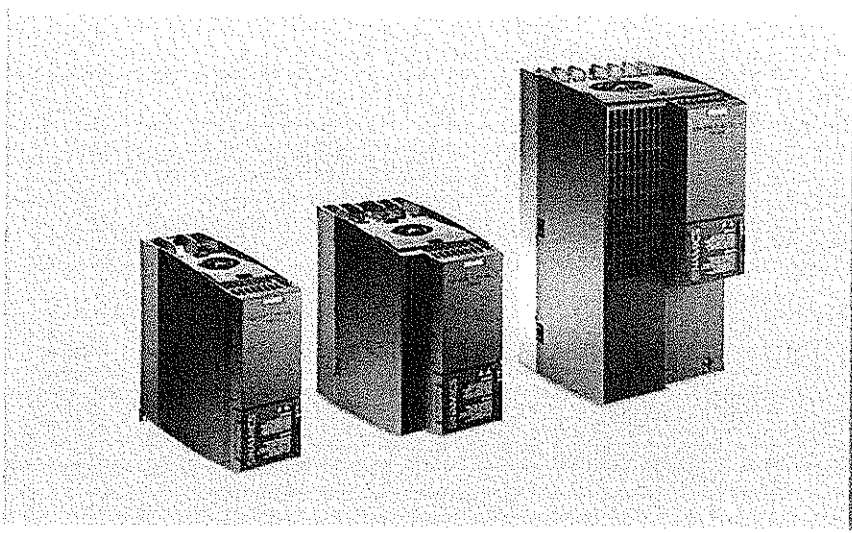

Highlights at a glance

Mechanical design
- Compact
- Simple commissioning and maintenance
- Side-by-side mounting without derating
- Pluggable terminals

Electronics
- Integrated braking chopper
- STO safety function
- IOP , BOP-2 and USB interface
- Optional interchangeable memory card (SD)
- Electrically isolated inputs

Communication
- PROFINET, PROFIBUS DP, CANopen, USS/Modbus RTU
- Integral component of Totally Integrated Automation
- Supported profiles: PROFIenergy and PROFIsafe

SINAMICS G120C – advantages

	G120C features	Your benefits
Small and rugged		
	• High power density, low envelope dimensions • Several devices can be mounted directly next to one another • Coated modules Operation up to an ambient temperature of 60 °C Simple installation in the smallest space	• Low space requirement • Long service life, high reliability • Can be used in small control cabinets, close to the machine
Operator friendliness		
	• Optimized parameter set • Optimized commissioning • Getting-Started document • BOP-2 and IOP operator panels can be used • Integrated USB port	• Simple and fast software parameterization • Simple operability during commissioning and in operation • Minimized training costs, utilization of already existing SINAMICS know-how • High degree of service friendliness
Installation and maintenance		
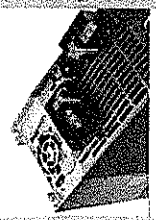	• Pluggable terminals • Cloning function using BOP-2, IOP or SD card • G120C integrated in TIA teleservice • Operating hours counter for "Drive on" and "Motor on"	• Fast mechanical installation • Intuitive series commissioning • Integration in the automation environment • Simple maintenance
Leading technological functions		
	• Energy-efficient, encoderless vector control • Automatic flux reduction with V/f ECO • Integrated energy calculator • Safety Integrated (STO) • Supported profiles: PROFIsafe, PROFIenergy	• High control quality • Energy-efficient motor control • Energy-saving can be measured • Integrated safety functions without supplementary costs
State-of-the-art communication		
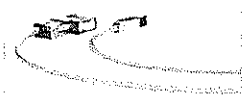	The following versions are available: • PROFINET • PROFIBUS DP • CANopen • USS/Modbus RTU • Ethernet/IP	• Uses all of the common bus systems • Can be flexibly used • Reliable communication • Can be simply plugged in • Uninterruptible thanks to the optional 24V power supply

3/12/18

Selection and ordering data

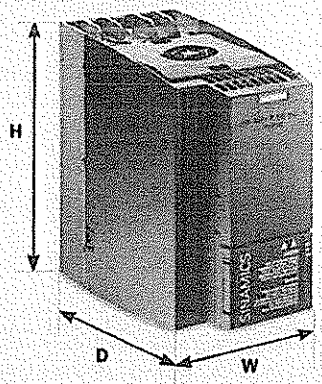

Rated data				Article No.				Frame size	Dimensions		
P_{LO} [1] kW	P_{LO} [1] Hp	I_{LO_out} [1] A	I_{HO_out} [2] A						W	H	D [3]
3-phase supply voltage 380–480 V									mm	mm	mm
0.55	0.75	1.7	1.3	6SL3210-1KE11-8				FSA	73	196	203 (PROFINET: + 22,4 mm)
0.75	1.0	2.2	1.7	6SL3210-1KE12-3							
1.1	1.5	3.1	2.2	6SL3210-1KE13-2							
1.5	2.0	4.1	3.1	6SL3210-1KE14-3							
2.2	3.0	5.6	4.1	6SL3210-1KE15-8							
3	4.0	7.3	5.6	6SL3210-1KE17-5							
4	5.0	8.8	7.3	6SL3210-1KE18-8							
5.5	7.5	12.5	8.8	6SL3210-1KE21-3				FSB	100		
7.5	10.0	16.5	12.5	6SL3210-1KE21-7							
11	15.0	25.0	16.5	6SL3210-1KE22-6				FSC	140	295	
15	20.0	31.0	25.0	6SL3210-1KE23-2							
18.5	24.0	37.0	31.0	6SL3210-1KE23-8							

EMC filter			
Integrated EMC Class A/C2 filter [4]	A		
Unfiltered version	U		
Integrated communication interface			
RS485 with USS/Modbus RTU		B	1
SUB-D with PROFIBUS DP		P	1
SUB-D with CANopen		C	1
PROFINET		F	1

[1] LO = Low Overload
[2] HO = High Overload
[3] Frame size FSA- FSC with PROFINET depth: additional, 22.4mm
[4] For detailed information on maintaining interference classes, refer to the product documentation
[5] The continuous output current is not reduced when using the overload capability

Technical data	
Voltage/frequency	3-phase 380–480 V –20 % +10 % with 50/60 Hz +/–5 %
Power range	0.55–18.5 kW/ 0.75–25 Hp
Overload power	For I_{LO_out} (LO [1]): 150% for 3 sec. **Plus** 110% for 57 sec. within a 300 sec. load cycle For I_{HO_out} (HO [2]): 200% for 3 sec. **Plus** 150% for 57 sec. within a 300 sec. load cycle [5]
Degree of protection	IP20/UL open type
Ambient temperature	-10° to 40 °C without derating/up to 60 °C with derating
EMV	Acc. to IEC 61800-3, Category 2 (FS A,B) or Category 3 (FSC) with internal EMC filter
Motor cable lengths	50 m shielded/100 m unshielded
Signal inputs/outputs	6 DI/ 2 DO/ 1 AI/ 1 AO
Safety technology	SIL 2 acc. EN 61508, PL d acc. EN ISO 13849, class 3 acc. EN 60204
Control modes	Vector, V/f, V/f ECO
Energy functions	Energy-saving calculator, energy consumption calculator, automatic flux reduction
Function	Fixed velocity/speed setpoint, 2/3 wire control, PID controller, motor holding brake control
Braking	Integrated braking chopper

Options		
Braking resistor		
FSA	0.55–1.5 kW	6SL3201-0BE14-3AA0
FSA	2.2–4 kW	6SL3201-0BE21-0AA0
FSB	5.5–7.5 kW	6SL3201-0BE21-8AA0
FSC	11–18.5 kW	6SL3201-0BE23-8AA0
Input reactor		
FSA	0.55–1.1 kW	6SL3203-0CE13-2AA0
FSA	1.5–4 kW	6SL3203-0CE21-0AA0
FSB	5.5–7.5 kW	6SL3203-0CE21-8AA0
FSC	11–18.5 kW	6SL3203-0CE23-8AA0
Operator panels		
BOP-2	Basic Operator Panel	6SL3255-0AA00-4CA1
IOP	Intelligent Operator Panel	6SL3255-0AA00-4JA1
Output reactor		
FSA	0,55–2,2 kW	6SL3202-0AE16-1CA0
FSA	3–4 kW	6SL3202-0AE18-8CA0
FSB	5,5–7,5 kW	6SL3202-0AE21-8CA0
FSC	11–18,5 kW	6SL3202-0AE23-8CA0
Democase SINAMICS G120C		
G120C PN FSA with motor and panels		6AG1067-2AA00-0AA0

Contact person:

Siemens AG
Industry Sector
Motion Control Systems
P.O. Box 3180
91050 ERLANGEN
GERMANY

Subject to change without prior notice
Article No.: E80001-A360-P210-V5-7600
DISPO 21500
SCHÖ/1000022620 V6.MKSINA.WES
WS 06147.0
Printed in Germany

© Siemens AG 2014

The information provided in this brochure contains merely general descriptions or characteristics of performance which in actual case of use do not always apply as described or which may change as a result of further development of the products. An obligation to provide the respective characteristics shall only exist if expressly agreed in the terms of contract. All product designations may be trademarks or product names of Siemens AG or supplier companies whose use by third parties for their own purposes could violate the rights of the owners.

Q 3/12/18

KARKANIAS
ENVIRONMENTAL TECHNOLOGY S.A

WALL PENSTOCKS

Manufacturer General Specifications

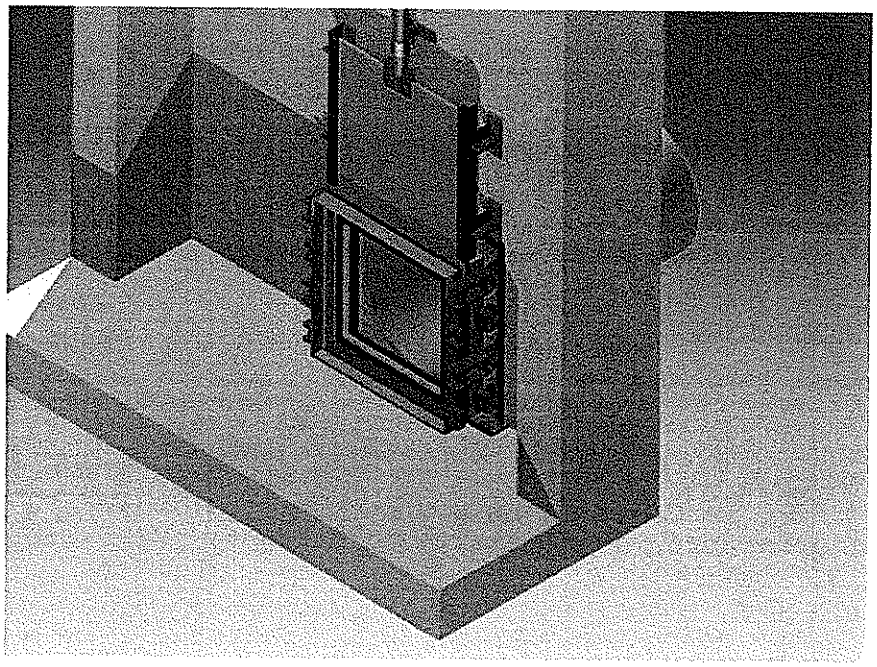

General description

Wall penstocks are 4-sided sealing gates manufactured in square and rectangular dimensions, together with a wide range of trim levels and designs to suit a variety of applications. Operation is achieved manually by means of a hand wheel, electrically or pneumatically by actuators. Electric motors and actuators are optionally offered with explosion protection in case of installation in hazardous areas. Mounting can be easily achieved on face wall of manholes (in front of wall openings or pipe endings) and in depth according to required specifications. The whole structure is made of stainless steel grade 316L for higher corrosion resistance.

HEADQUARTERS:
Industrial Area of Larisa
Postal Code 41004, BOX 3053 Greece
www.karkanias.gr

Phone: +30 2410 541386
Fax: +30 2410 541354
Email: info@karkanias.gr

3/12/12

KARKANIAS
ENVIRONMENTAL TECHNOLOGY S.A.

Construction

- **Frame**: welded stainless steel
- **Frame seals**: parallel resilient EPDM seals bonded to frame sides
- **Door**: stainless steel with reinforcement angles if required
- **Guide system**: stainless steel and PTFE
- **Spindle nut**: zinc-free bronze
- **Spindle drive unit**: stainless steel with trapezoidal thread
- **Operation**: electric with AUMA actuator with explosion-proof motor II 2 G EExe II T3
- **Dimensions**: upon request

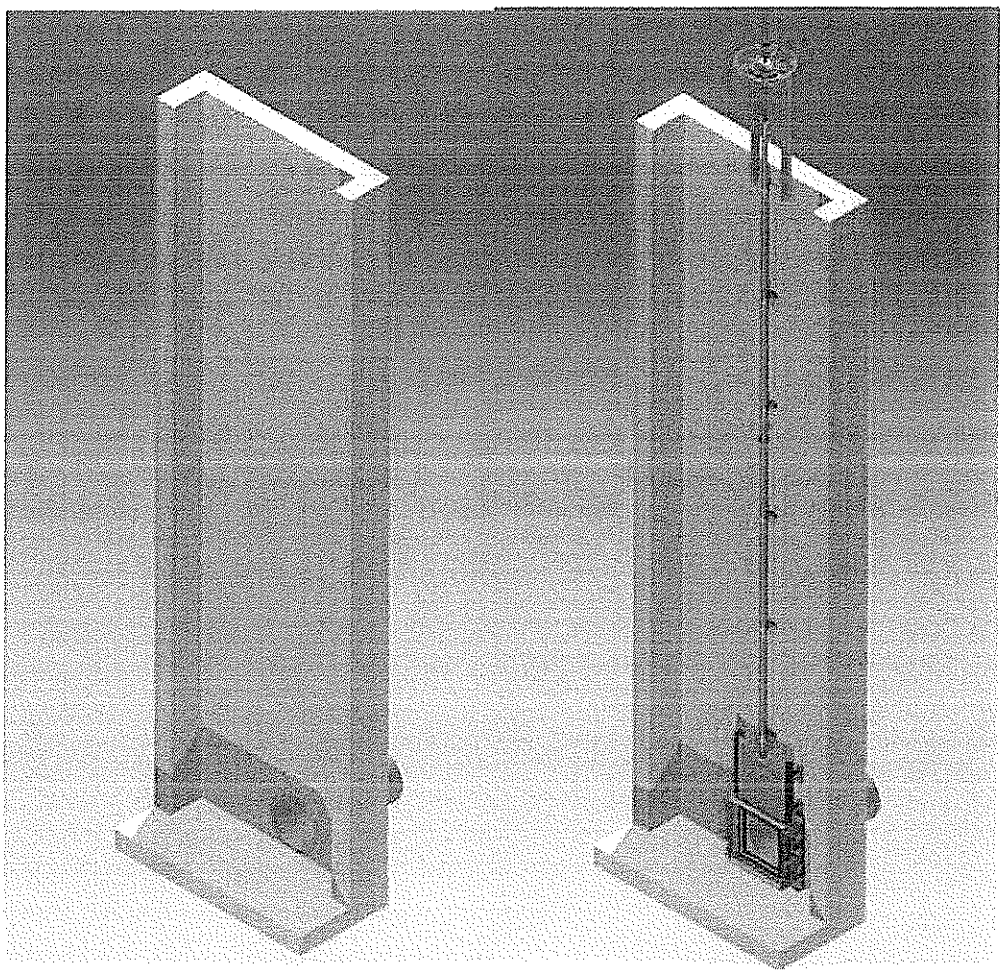

HEADQUARTERS:
Industrial Area of Larisa
Postal Code 41004, BOX 3053 Greece
www.karkanias.gr

Phone: +30 2410 541386
Fax: +30 2410 541354
Email: info@karkanias.gr

23/12/18

KARKANIAS
ENVIRONMENTAL TECHNOLOGY S.A.

Design

Wall penstocks frame is welded stainless steel shaped in U-profile and is suitable for mounting on concrete walls in front of openings or pipes. Each penstock is provided with a suitable handwheel of adequate diameter for the duty required. Gearing is supplied where is necessary to ensure that the required operating force applied by hand to the rim of the wheel does not exceed 200 N. Instead of handwheel an electric actuator can be applied in line with required technical specifications. The height of the handing is approximately 1.0 m above the operating level.

Penstocks are of non-rising stem and operation is achieved by a spindle. Spindle's thread form is trapezoidal and direction of closing is clockwise. On the door is fixed the spindle nut which is made of zinc-free bronze. The door is equipped with reinforced ribs in order to withstand the applied pressure load.

Fixing nuts and bolts are made of stainless steel material with grade similar to whole structure.

Penstocks shall be water-tight under the conditions of head and direction of flow as stated in the appropriate Clause or Schedule of the Particular Specification.

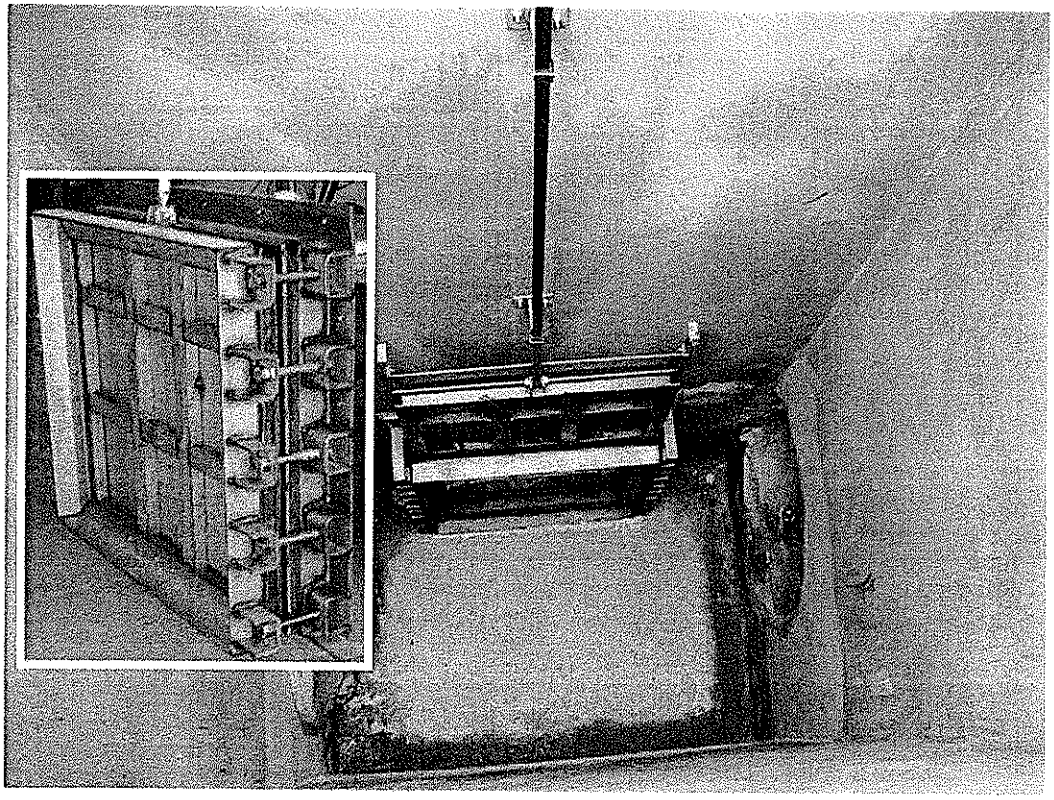

HEADQUARTERS:
Industrial Area of Larisa
Postal Code 41004, BOX 3053 Greece
www.karkanias.gr

Phone: +30 2410 541386
Fax: +30 2410 541354
Email: info@karkanias.gr

23/12/18

KARKANIAS
ENVIRONMENTAL TECHNOLOGY S.A.

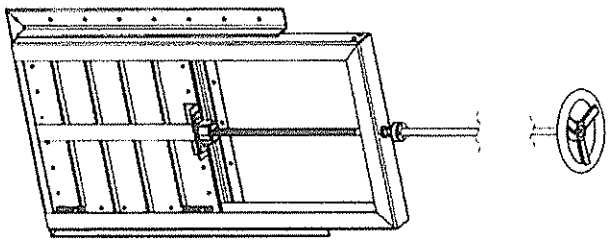

A=OPENING WIDTH
B=PENSTOCK WIDTH
C=OPENING HEIGHT
D=PENSTOCK HEIGHT
E=TOTAL HEIGHT

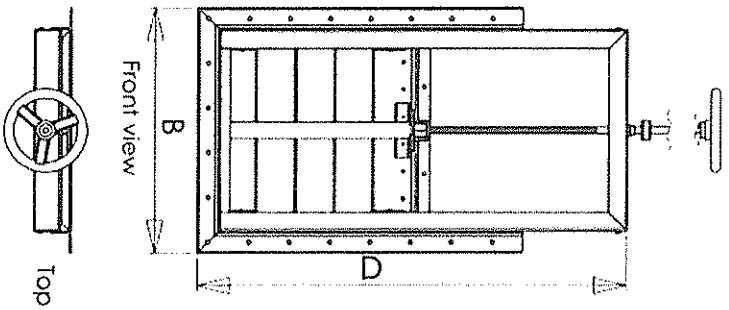

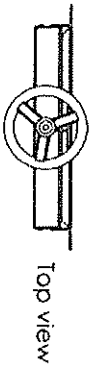

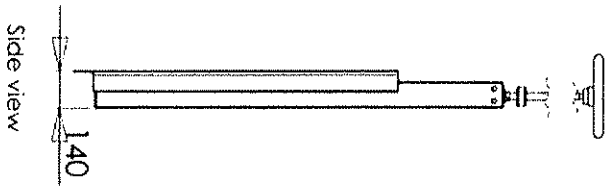

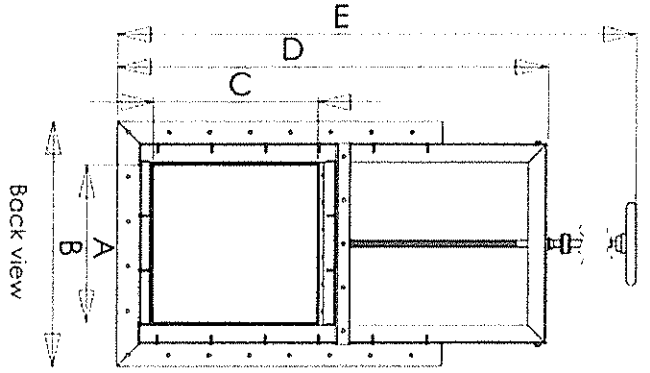

KARKANIAS
ENVIRONMENTAL TECHNOLOGY SA

WALL PENSTOCK

PS706504

AISI 316L

A4

HEADQUARTERS:
Industrial Area of Larisa
Postal Code 41004, BOX 3053 Greece
www.karkanias.gr

Phone: +30 2410 541386
Fax: +30 2410 541354
Email: info@karkanias.gr

Q 3/12/10

4. MECHANICAL WASTEWATER PRETREATMENT UNIT

03/12/18

GDF

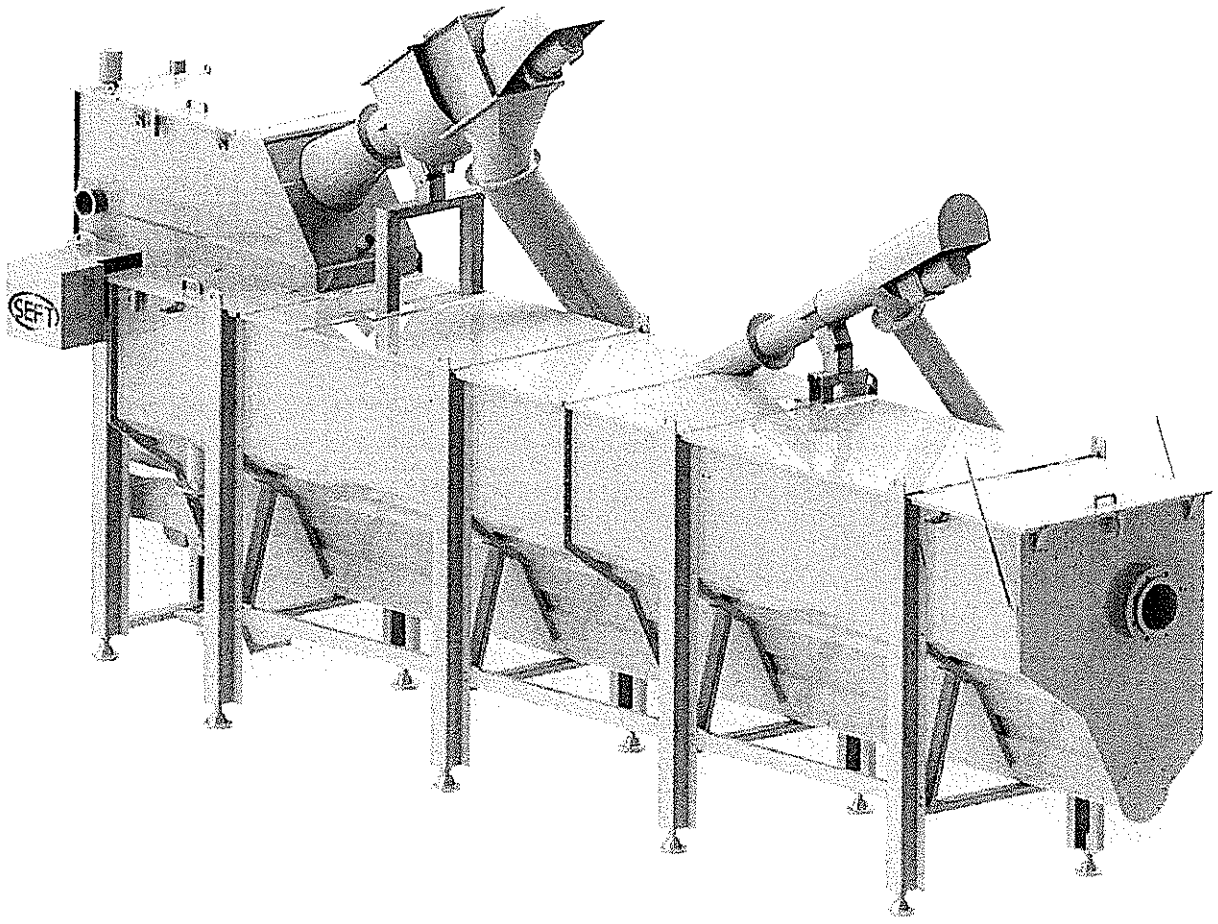

IMPIANTO DI PRE TRATTAMENTO COMPATTO

PRE-TREATMENT COMBINED COMPACT UNIT

03/12/18

GDF - IMPIANTO DI PRE TRATTAMENTO COMPATTOI

Questa macchina combinata viene alimentata da una pompa oppure per gravità, attraverso una tubazione fissa.
Il refluo passa attraverso una filtrococlea che rimuove le particelle solide più grosse, poi giunge in una vasca di sedimentazione dove le particelle sedimentate vengono poi rimosse da un sistema di coclee.
Come optional è possibile installare il sistema di rimozione dei grassi e degli oli sospesi.

FUNZIONI
- Filtrazione
- Lavaggio/compattazione dei solidi rimossi
- Estrazione sabbie
- Degrassatura (versione GDF/D)

VANTAGGI
- Assenza di odori
- Assenza di bloccaggi
- Bassi costi di gestione e manutenzione
- Ridotti spazi richiesti
- Lavori edili non necessari
- Facilità di installazione e gestione
- Bassi residui di materia organica nel solido estratto
- Riduzione fino al 40% in volume dei solidi rimossi

CARATTERISTICHE COSTRUTTIVE

Portata in ingresso	Fino a 150 lt./sec.
Foratura vaglio	ø 3 ÷ ø 7 mm foro tondo

GDF - PRE-TREATMENT COMBINED COMPACT UNIT

This combined machine is fed by a pump or to gravity, through a fixed pipe.
The effluent passes through a screw screen that removes the most large solid particles, then goes to a sedimentation tank where the particles sedimented are then removed by a system of scews.
As an option you can install the system for removal of fats and suspended oils.

FEATURES
- *Filtration*
- *Wash / compaction of solids removed*
- *Extraction of sand*
- *Degreasing (on GDF/D version)*

ADVANTAGES
- *No odor*
- *Low operating costs and maintenance*
- *Reduced space requested*
- *Construction work is not necessary*
- *Ease of installation and management*
- *Low organic matter in the solid residue extracted*
- *Up to 40% by volume of solids removed*

MANUFACTURING FEATURES

Inlet flow rate	*up to 150 lt./sec.*
Filtering options	*ø 3 ÷ ø 7 mm holes*

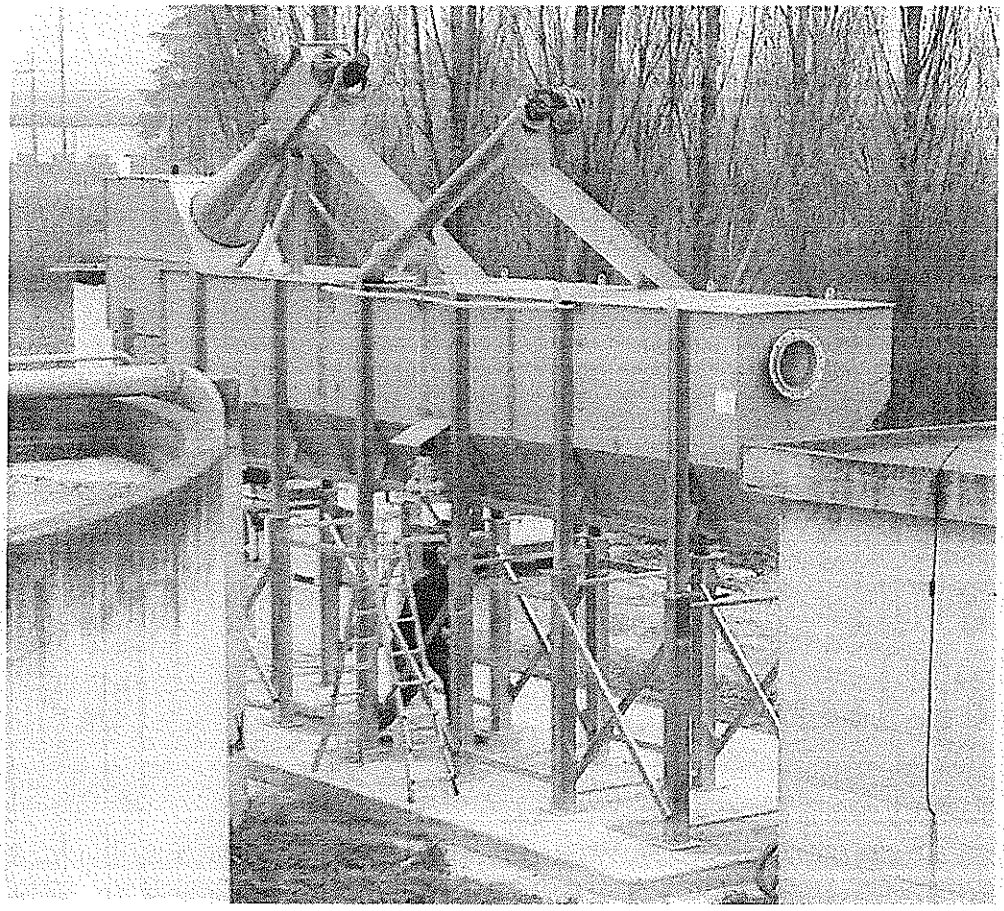

03/12/18

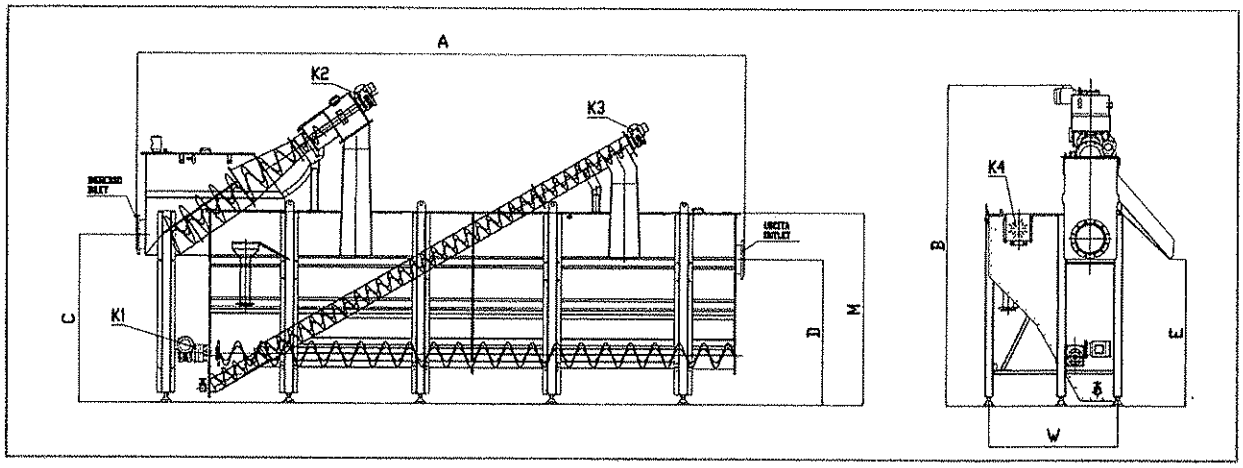

DETTAGLI TECNICI / *TECHNICAL DETAILS*

	Q L/sec	A mm	B mm	C mm	D mm	E mm	M mm	W mm	INLET/OUTLET PN10
GDF 10	10	4200	2800	1400	1100	1375	1600	730	DN200
GDF 20	20	5700	3530	1502	1440	1500	1900	730	DN200
GDF 30	30	7200	3530	1502	1440	1500	1900	730	DN250
GDF 45	45	6950	3770	1850	1550	1550	2180	1100	DN250
GDF 60	60	8455	3920	1900	1650	1670	2180	1100	DN350
GDF 80	80	8615	4115	1900	1600	1815	2180	1300	DN350
GDF 100	100	11950	5265	2500	2000	1700	2770	1600	DN500
GDF 120	120	13600	4957	2396	2285	1500	2710	1600	DN500
GDF 150	150	16600	4957	2396	2285	1500	2710	1600	DN500

TABELLA POTENZE APPLICATE / *INSTALLED POWER TABLE*

		GDF10	GDF20	GDF30	GDF45	GDF60	GDF 80	GDF 100	GDF120	GDF150
K1	Kw	0,55	0,55	0,55	0,55	0,55	0,55	0,55	0,75	0,75
K2	Kw	1,1	1,1	1,1	1,1	1,1	1,5	1,5	2,2	2,2
K3	Kw	0,37	0,37	0,37	0,37	0,37	0,37	0,55	0,55	0,55

TABELLA DIMENSIONALE / *DIMENSION TABLE*

	Q L/sec	A mm	B mm	C mm	D mm	E mm	M mm	W1 mm	INLET OUTLET PN10	OUTLET GREASE PN10
GDF/D 10	10	4200	2800	1400	1100	1375	1250	1300	DN200	DN 100
GDF/D 20	20	5700	3530	1502	1440	1500	1250	1200	DN200	DN 100
GDF/D 30	30	7200	3530	1502	1440	1500	1250	1200	DN250	DN 100
GDF/D 45	45	6950	3770	1850	1550	1550	2180	1450	DN250	DN 100
GDF/D 60	60	8455	3920	1900	1650	1670	2180	1450	DN350	DN 100
GDF/D 80	80	8615	4115	1900	1600	1815	2180	1580	DN350	DN 125
GDF/D 100	100	11950	5265	2500	2000	1700	2770	1930	DN500	DN 125
GDF/D 120	120	13600	4957	2396	2285	1500	2100	2060	DN500	DN 125
GDF/D 150	150	16600	4957	2396	2285	1500	2100	2060	DN500	DN 125

TABELLA POTENZE INSTALLATE / *INSTALLED POWER TABEL*

	GD	F10	GDF20	GDF30	GDF45	GDF60	GDF 80	GDF 100	GDF120	GDF150
K1	Kw	0,55	0,55	0,55	0,55	0,55	0,55	0,55	0,75	0,75
K2	Kw	1,1	1,1	1,1	1,1	1,1	1,5	1,5	2,2	2,2
K3	Kw	0,37	0,37	0,37	0,37	0,37	0,37	0,55	0,55	0,55
K4	Kw	0,18	0,18	0,18	0,18	0,18	0,18	0,18	0,18	0,18

03/12/18

GDF
GDF/D

* Per altri accessori qui non indicati o richieste di configurazione fuori standard, inviare cortesemente richiesta via e-mail
* Il costruttore si riserva il diritto di modificare dimensioni e specifiche tecniche senza alcun preavviso

GDF
GDF/D

* *For other optionals or special equipment configuration, please send us an e-mail request*
* *Manufacturer may modify some dimensions or technical specs without prior comunication*

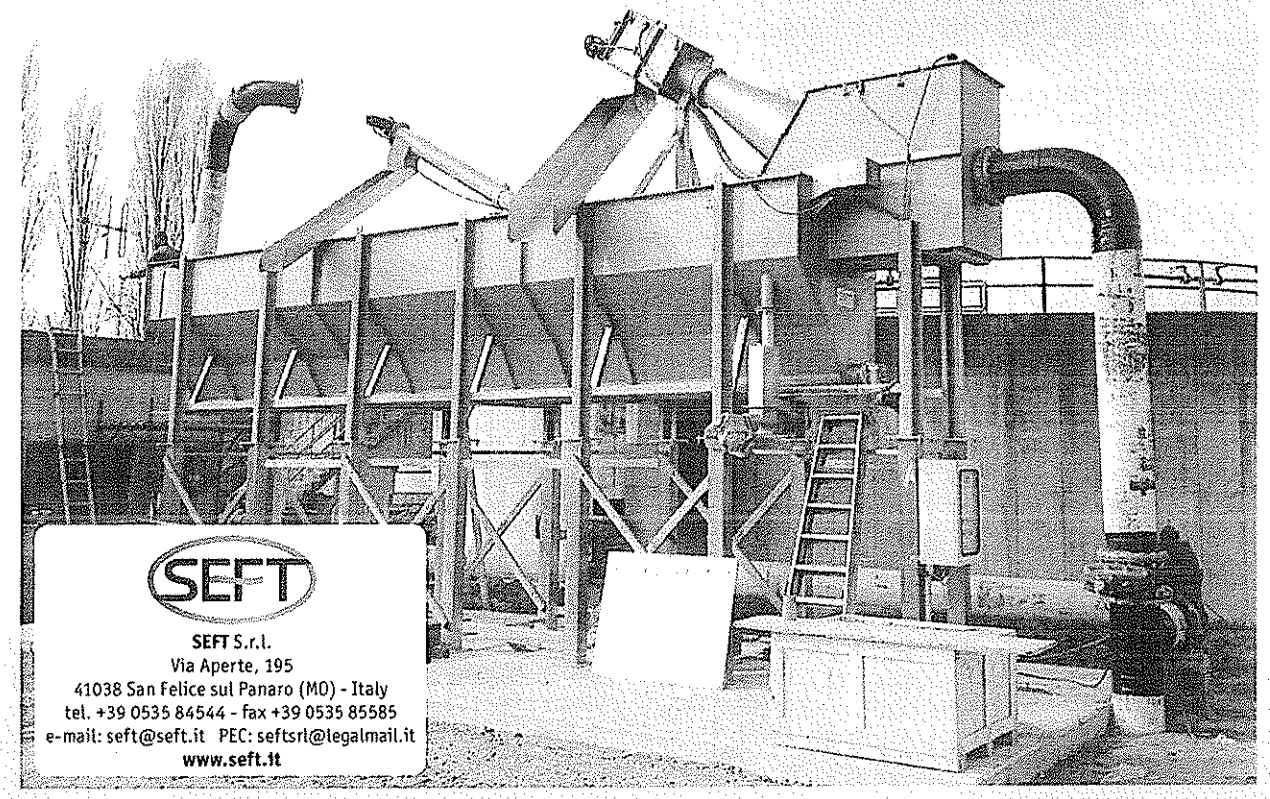

SEFT
SEFT S.r.l.
Via Aperte, 195
41038 San Felice sul Panaro (MO) - Italy
tel. +39 0535 84544 - fax +39 0535 85585
e-mail: seft@seft.it PEC: seftsrl@legalmail.it
www.seft.it

I dati riportati nel presente catalogo non sono impegnativi e possono subire variazioni in qualsiasi momento.
Rights reserved to modify technical specifications.

03/12/18

GDF/D 30 Combined wastewater pre-treatment unit

This combined machine is fed by a pump or to gravity, through a fixed pipe.
The effluent passes through a screw screen that removes the most large solid particles, then goes to a sedimentation tank where the particles sedimented are then removed by a system of scews.
As an option you can install the system for removal of fats and suspended oils.

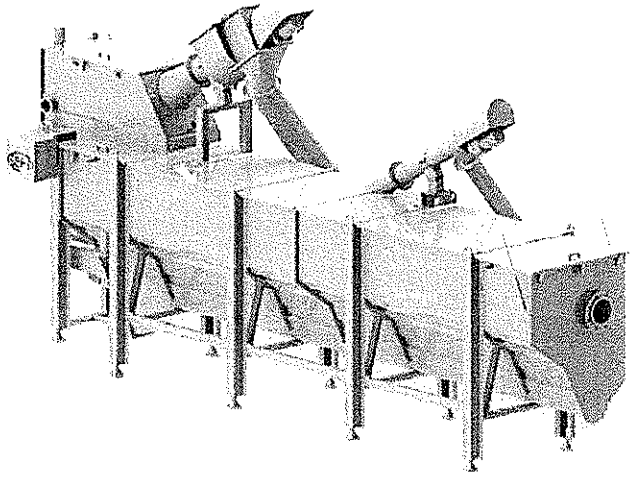

Inlet Flow = 30 l/s

Average characteristics of reference for wastewater: TSS = 500 ppm, sand content 0,5%

Average performances: efficiency up to 90% for sand removal of particles > 200µm and density above 1,65 Kg/dm3.

Screenings weight and volume reduction: up to 30-40%

Screw screen FCP/C 50 with compaction:
Loading basket diameter: **Ø456 mm**
Screw diameter for transport / compaction: Ø219 mm
Filtration type: rounded holes
Dimension: **Ø6 mm**
Inclination: 35°
Squared outlet spout for screening discharge
Basket cleaning through nylon bolted brushes
Motor 1,1 kW, 400V – 50Hz – 3 phases, 4 poles, IP55, F class
Gear reducer, endless screw, 11 rpm

Sand settling tank
Horizontal screw conveyor and sand transport mod. TSA 200
Shaft less screw diameter: Ø180mm
High carbon steel single profile, pitch 1/1, thick. 20mm
With mechanical water tight group.
Motor 0,55 kW, 400V – 50Hz – 3 phases, 4 poles, IP55, F class
Gear reducer, endless screw, 5 rpm

03/12/18

Pull execution
Sand extraction screw conveyor mod. TSA"T" 168
Shaft less screw diameter: Ø168mm
High carbon steel single profile, pitch 1/1, thick. 20mm
With mechanical water tight group.
Motor 0,37 kW, 400V – 50Hz – 3 phases, 4 poles, IP55, F class
Gear reducer, endless screw, 5 rpm
Pull execution

Air blowing system

External structure in stainless steel AISI316 L
Tanks in stainless steel AISI316 L
Shaft less spirals in high carbon steel painted RAL6029
Bolts in A2
Anti-wear material: bolted plates in stainless steel AISI316 L
Inlet: alum. DN250 PN10
Outlet: alum. DN250 PN10
Degreasing outlet: Flanged alum. DN100 PN10

Grease / Oil removal "go & back carriage" system
Motor 0,37 kW, 400V – 50Hz – 3 phases, 4 poles, IP55, F class

Overall dimensions:
Total length: 7.000 mm
Settling tank length: 6.000 mm
Total width: 1.420 mm
Total height after installation: 3.050 mm

Including:
Heating system kit for compaction zone (suitable for use up to 0°C)
Heating system kit for transport zone (suitable for use up to 0°C)
Washing system on compaction zone with manual valve
PE breathing valve on screw screen tank
Discharging chutes for screenings in AISI316 L (LENGTH = 2000 mm)
PE pipe for returning liquid of compaction zone
Rod level sensor on screw screen tank
Safety limit-switches for opening hatches
Warning stickers on unit parts at risk of intrusion
Eyebolts

Not included:
Control panel & wiring connection
Hydraulic connections
Electrical air blower
Potential scaffolding

Consumption:
Water for compaction washing system: 0.5 lt./sec. @ max 5bar
Compressed air for air blowing system: 25 Nm3/h @ 0.15bar

Test:
Running test with empty tanks in our workshop
Settling tank filling with clear water for water tight test

03/12/18

OPTIONS

BYPASS internal with static bars
Structure in stainless steel AISI304L
Bars material: bolted plates in stainless steel AISI304 L
Bars spacing: 15 mm
Bar thickness: 30 x 8 mm
Bar inclination : 75 °

Control panel
PLC Protection degree IP65, 400 V
In fiberglass with buttons at sight + Emergency button
Manual start/stop and automatic cycle start/stop selectors
Warning lights for: line presence, machine running, thermal alarm
Documentation: control panel electrical diagram + CE conformity declaration
Predisposition for remote control for start/stop with thermal alarm signal
Wiring included
Ventilation (if necessary)
Heating included
Consumption and working hours
Communication card for industrial protocol included

Electrical Blower
Flow rate: 25 m3/h
Pressure: 150 mbar
Motor: 0,25 kW 380V, 50hz, 3phases, IP55 grade, F class
1" fitting
Side installation, with stainless steel hoses
Retention valve, Suction filter, Pressure valve
Wiring and installation included

Grease Pump
Brand: SYDEX
Flow rate: 400 lt/h (90rpm)
Pressure: 4 bar
Motor: 1,1 kW, 2,45A, 380V, 50hz, 3phases, IP55

03/12/18

REV.01	Allungato coclea estrattrice di 549mm	LUCA	26/05/2014
REV.02	Aggiornato vista laterale	LUCA	26/05/2014
REV.03	Inserito dall'alto la vista della scarico tubo degrassatore	LUCA	14/07/2014

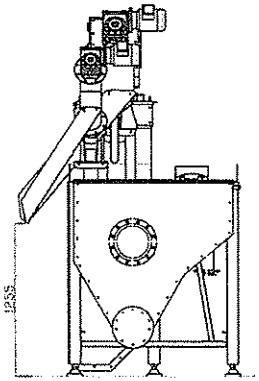

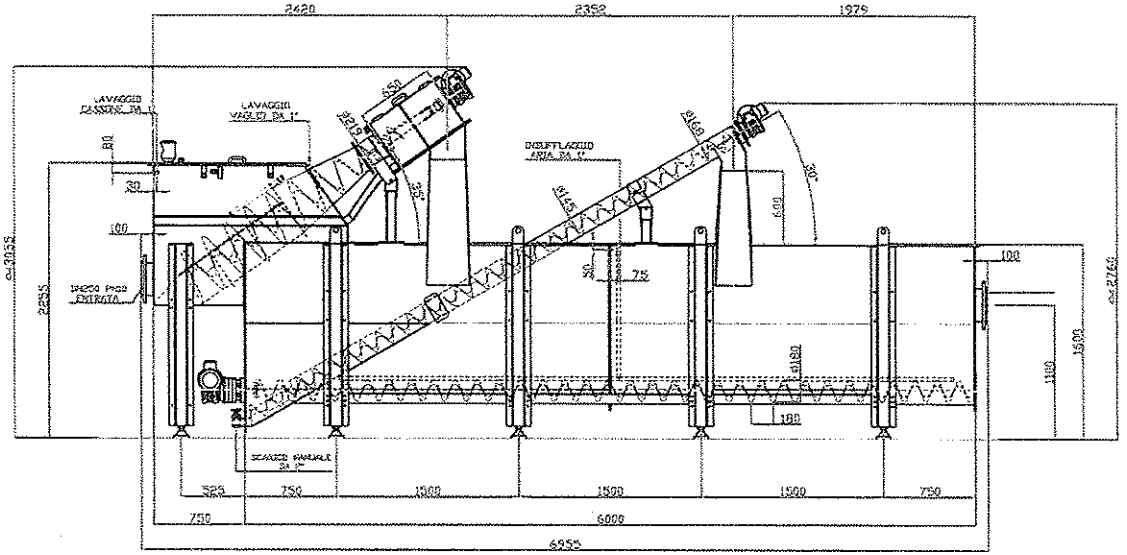

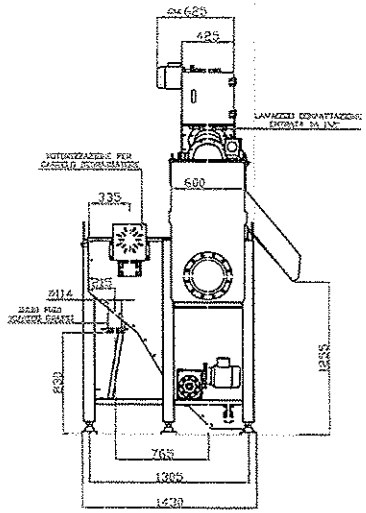

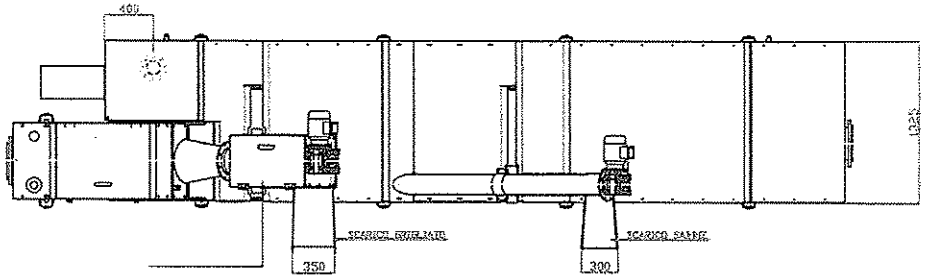

	Grado di Finitura Superficiale: ( )	Materiale: AISI - FE	Codice Pezzo: GDF-D 30L.
		Trattamento:	Codice Progetto: 111_13
Scala: 1:1	Foglio:	DENOMINAZIONE: Peso: Kg.	Colore :
Quote senza indicazione di tolleranza grado di precisione medio secondo UNI EN 22768 fori tolleranza+ /alberi tolleranza −			Disegnato da: Luca Data: 29/02/2012
			Modificato da: Luca Data: 14/07/2014
SE. F. I. srl via Aperte,360 41038 S.F. sul Panaro (Mo) www.seft.it seft@seft.it		GDF-D 30L. L.6000 - CON FCPC50 A DX - ESTRATTRICE Ø168 - SISTEMA DI DEGRASSATURA	Codice disegno: GDF-D 30L.

Questo disegno non puo'essere trasmesso a terzi senza autorizzazione di SE.F.T. srl

0.31/2118

CERTIFICATE

Management system as per
EN ISO 9001 : 2008

In accordance with TÜV NORD CERT procedures, it is hereby certified that

SEFT S.r.l.
Via Aperte, 195
41038 San Felice Sul Panaro (MO)
Italy

applies a management system in line with the above standard for the following scope

Design, manufacture and sale of machinery for civil and industrial purification and customised equipments for industrial plants.

Certificate Registration No. 44 100 134722
Audit Report No. IT-14670/2016

Valid from 2016-06-05
Valid until 2018-09-14
Initial certification 2013

Certification Body
at TÜV NORD CERT GmbH

Bologna, 2016-05-27

This certification was conducted in accordance with the TÜV NORD CERT auditing and certification procedures and is subject to regular surveillance audits.

TÜV NORD CERT GmbH Langemarckstraße 20 45141 Essen www.tuev-nord-cert.com

DAkkS
Deutsche
Akkreditierungsstelle
D-ZM-12007-01-01

03/12/18

5. BIOLOGICAL TREATMENT PROCESS

5.2 PREDENITRIFICATION TANK

03/12/18

WILO SE, Werk Hof
Heimgartenstraße 1-3
Postfach 3309 - D-95030 Hof/Saale
T: +49 9281 974-540 F: +49 9281 974-133
ctwwt@wilo.com www.wilo.com

Mixer data sheet

ID	17-ORH-GR-AB-1-0001
Project country	Greece
Project name	WWTP MONDENEGRO
Position	1 Anoxic tank
Date	2017-09-01
Enquiry	

Data for selection

Mixed liquid

Kind	Activated sludge	
Density	1000	kg/m³
pH value	7	
Temperature	20	°C
Dry solids content	0,5	%
Flow behaviour	Newton flow	
Kind of thickening	None	
Additional thickener	No	

Solids

Origin	Municipal	
Kind	Not determined	
Solid size	Not determined	

Mixing task

Operating mode	Continuous	
Mixing task	Suspend	
Average calculated flow velocity[1]	0,3	m/s

Tank

Material	Concrete	
Outlet	On bottom, laterally at the tank edge	
Tank shape	Rectangular tank	
Tank volume	363	m³
Vertical / inclined walls	Tank with vertical walls	
Length on upper edge	13,2	m
Width on upper edge	5,5	m
Tank height	5	m
Maximum filling level	5	m
Minimum filling level	5	m
Relevant filling level	5	m

Preparation

Preparation	Screen with gap width < 10 mm, but no pre-clarification

03/12/18

WILO SE, Werk Hof
Heimgartenstraße 1-3
Postfach 3309 - D-95030 Hof/Saale
T: +49 9281 974-540 F: +49 9281 974-133
ctwwt@wilo.com www.wilo.com

Mixer data sheet

ID	17-ORH-GR-AB-1-0001
Project country	Greece
Project name	WWTP MONDENEGRO
Position	1 Anoxic tank
Date	2017-09-01
Enquiry	

Aeration

Kind: Without

Tank particularities

Default

Remarks regarding the selection process

The mixing result depends on the functional quality of the plant equipment in the mechanical treatment stage (preliminary treatment). Mineral fractions (grit and sand) must be always excluded from the process and cannot be kept in suspension. It is absolutely required to check the values mentioned above with the actual values on site.

03/12/18

WILO SE, Werk Hof
Heimgartenstraße 1-3
Postfach 3309 - D-95030 Hof/Saale
T: +49 9281 974-540 F: +49 9281 974-133
ctwwt@wilo.com www.wilo.com

Mixer data sheet

ID	17-ORH-GR-AB-1-0001
Project country	Greece
Project name	WWTP MONDENEGRO
Position	1 Anoxic tank
Date	2017-09-01
Enquiry	

Selection of submersible mixers

Proposal

Type	TR 50-2.34-4/12 S	
Quantity	1	
Frequency	50	Hz
Rated power	4,5	kW
Propeller speed	338	1/min
Power factor (ISO 21630)	220	N/kW
Propeller diameter	0,5	m
Maximum power input	5,8	kW
Power input in duty point	*1 4,4	kW
System-dependent power input	*2 4,4	kW
Power density	*3 12,1	W/m³
System-dependent power density	*4 12,1	W/m³
Distance to water surface	0,9	m

*1 Measurement at static thrust acc. to ISO 21630 (inflow velocity ~0, Open Sea conditions).
*2 The power consumption of the mixer will be reduced in proportion to the flow velocity which is generated in the tank.
*3 According to ISO 21630.
*4 According to site conditions.

Important note

Installation of the mixer(s) according to installation sketch. Before installing the mixers, the up-to-date tank plans must be submitted without previous request to WILO SE, Hof for revision.

To guarantee a continuous operation, the minimum water cover above the propeller specified by WILO must be ensured.
Please check if our basic data are identical to your application and, if necessary, inform us in writing about modifications/objections. The aforementioned mixer(s) selection data are integral part of our warranty, whereas our warranty comes only into effect, when the submersible mixers are installed according to our recommendation. Because the overall function depends considerably on the correct positioning of the submersible mixers, we will not accept any warranty claims which result from positioning which we did not approve explicitly. Also zones of weak flow due to the tank geometry are not part of our warranty. The values of maximum power input, power input in the duty point and energy density are valid for clean water. Furthermore the use of our submersible mixers in patented procedures or under trade mark rights of third parties is excluded from our liability.

[1]In case of rectangular or round tanks the average flow velocity above the tank section cannot be guaranteed.
For the selected tank shape no directed circulating flow can be generated for physical reasons. The calculated average flow velocity refers only to an undirected turbulent flow.

All attached notes relating to the product and the selection are part of the technical selection of WILO SE.

03/12/18

WILO SE, Werk Hof
Heimgartenstraße 1-3
Postfach 3309 - D-95030 Hof/Saale
T: +49 9281 974-540 F: +49 9281 974-133
ctwwt@wilo.com www.wilo.com

Installation proposal

ID	17-ORH-GR-AB-1-0001
Project country	Greece
Project name	WWTP MONDENEGRO
Position	1 Anoxic tank
Date	2017-09-01
Mixer	TR 50-2.34-4/12 S
Enquiry	

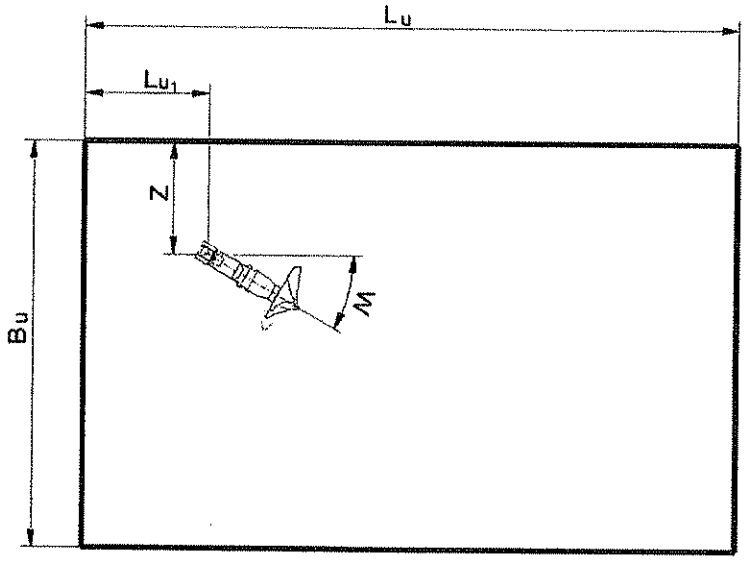

Installation recommendation regarding to miscellaneous minimum distances

n *	1	
Bu	5,5	m
Z	0,4	m
NI *	1	

Lu	13,2	m
Lu1	3,3	m
W	0	°

* n = no. of mixer per tank, NI = no. of installation positions per tank

03/12/18

WILO SE, Werk Hof
Heimgartenstraße 1-3
Postfach 3309 - D-95030 Hof/Saale
T: +49 9281 974-540 F: +49 9281 974-133
ctwwt@wilo.com www.wilo.com

Installation proposal

ID	17-ORH-GR-AB-1-0001
Project country	Greece
Project name	WWTP MONDENEGRO
Position	1 Anoxic tank
Date	2017-09-01
Mixer	TR 50-2.34-4/12 S
Enquiry	

Hints

The enclosed installation proposal is a schematic drawing and not according to scale. It serves as orientation guide. In case of order, the feasibility of this installation has to be matched with the tank drawing and the actual conditions. If there is an inflow and/or outflow in the immediate vicinity of the mixer, the mixer position must be checked based on updated tank plans to avoid bad influences on the mixer and short-circuit flows.

03/12/18

Abmessungen für Tauchmotorrührwerk
UNIPROP TRE 50-2

Dimensions of Submersible mixer **UNIPROP TRE 50-2**

Dimensions du circulateur immergé **UNIPROP TRE 50-2**

wilo
Heimgartenstraße 1-3 D-95030 Hof/Saale
Telefon +49 9281 974-0 Fax +49 9281 96528
www.wilo.com E-Mail: info@wilo.com

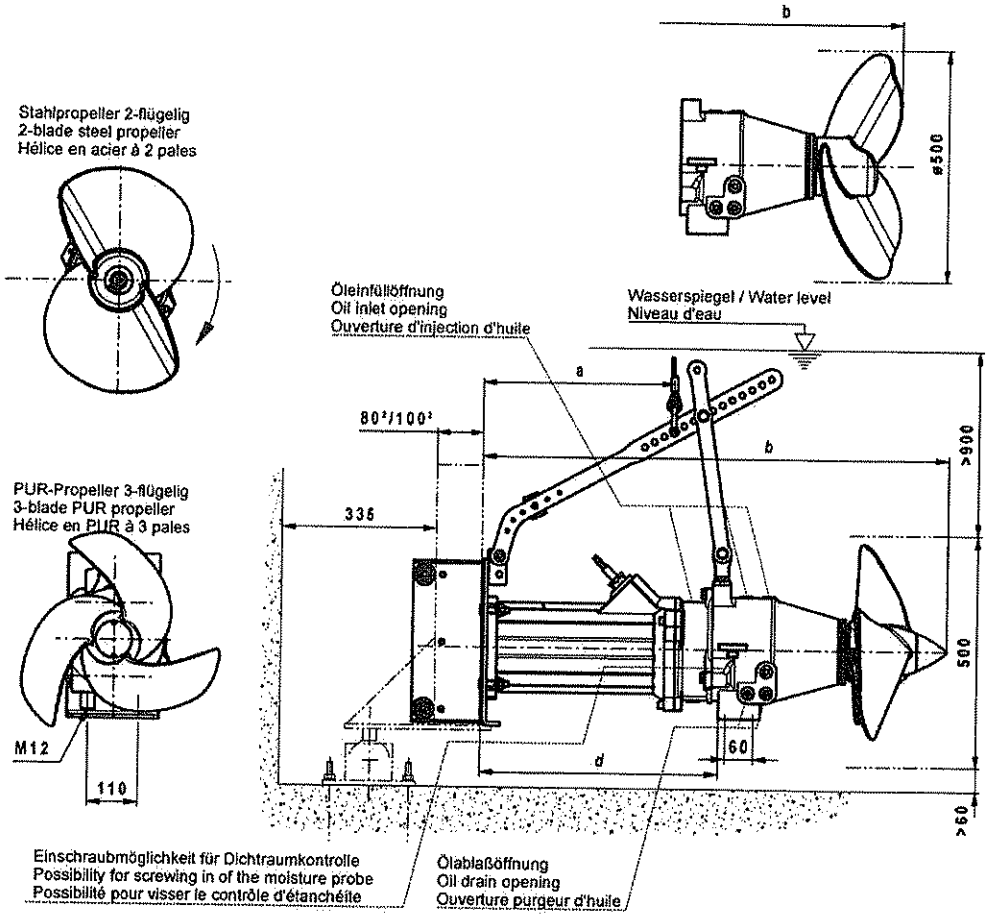

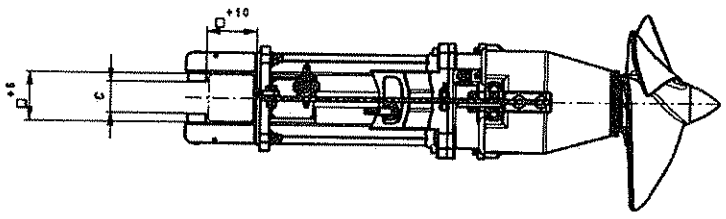

250kg-Hilfshebevorrichtung für alle Typen vorsehen!
Include auxiliary lifting device 250kg for all types!
A prévoir le dispositif auxiliaire de levage 250kg pour tous les types!

Motor / Motor type / Type de moteur	.../12		.../16		.../24
Führungsrohr Guide pipe / Tube de guidage	80x80	100x100	80x80	100x100	100x100
c	50	70	50	70	70
d	400	400	440	440	520

Motor / Motor type / Type de moteur	.../12	.../16		.../24	
Propeller / Propeller / Hélice	3-fl. PUR	3-fl. PUR	2-fl. 1.4571	3-fl. PUR	2-fl. 1.4571
a	xxx	xxx	xxx	xxx	xxx
b	890	930	900	1010	980
max. Gewicht / Weight / Poids	150 kg	160 kg	170 kg	176 kg	186 kg

Maßstab: 1:15 Technische Änderungen vorbehalten - Technical changes reserved - Modifications techniques réservées

Datum: 19.10.16 VM

Mb058.prt

03/12/18

Pioneering for You

Data sheet
Wilo-EMU TR 50-2.34-4/12 S

Design / Direction of rotation

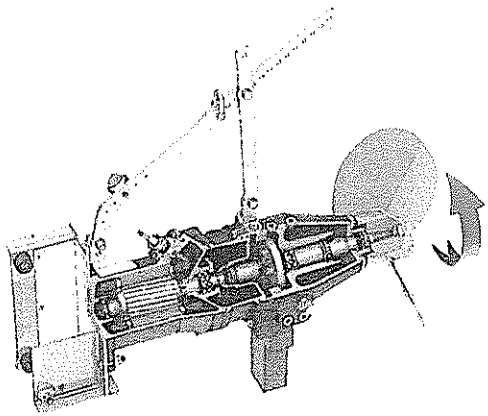

Unit	
Power consumption $P_{1.1}$	4.4 kW
Max. thrust F	970 N
Weight of unit m	118 kg
Max. weight* m	155 kg
Protection class	IP 68
Explosion protection	ATEX, FM
Ex classification ATEX	II 2G EEx d IIB T4
Ex classification FM	CLASS I, DIV. 1, GROUPS C, D; CLASS II, DIV. 1, GROUPS E, F, G; CLASS III

* = maximum weight including accessories

Propeller	
Propeller model	2-blade propeller with self-cleaning hub; backward-curved as a result clogging- and entwining-free
Nominal propeller diameter	500 mm
Propeller speed n	338 rpm
Transmission ratio	4.25

Fill quantities and types	
Filling prechamber	CLP transmission oil, ISO VG 220
Filling volume prechamber V	1.2 l
Filling gear chamber	CLP transmission oil, ISO VG 220
Fill quantity gear chamber V	0.5 l
Filling sealing chamber	White oil
Fill level sealing chamber V	1.1 l

Motor data	
Type of motor	T 17-4/12R (Ex)
Motor type	Submersible motor according to DIN/VDE 0530 (IEC 34)
Mains connection	3~400 V, 50 Hz
Rated current I_N	9.4 A
Starting current - direct I_A	47 A
Starting current - star-delta I_A	16 A
Power consumption P_1	5.8 kW
Rated power P_2	4.5 kW
Rated speed n	1405 rpm
Motor efficiency level	-
Efficiency η_M	78.0 %
Power factor $\cos \varphi$	0.89
Fluid temperature T	+3 ... +40 °C
Max. immersion depth	20 m
Insulation class	H
Max. switching frequency t	15 /h
min. switching break t	3 min
Starting torque M	67 Nm
Moment of inertia	0.0108 kg/m^2
Motor bearings	1 grooved ball bearing, 1 two-row inclined ball bearing

Materials	
Motor housing	EN-GJL-250
Motor shaft	1.4021
Gear housing	EN-GJL 250
Planetary gear	1.7131
Hollow gear	1.5216
Sun gear	1.7131
Output shaft	1.4462
Static seal	FPM
Sealing on pump side	SiC/SiC
Seal, gear chamber/prechamber	FPM
Seal, gear/sealing chamber	SiC/SiC
Sealing on motor side	FPM
Propeller	1.4571

Gear	
Gear construction type	m 2.0 as per DIN 780/P10 (ISO 54); Sun and planetary gears case hardened and sanded, internal gear butt-jointed
Gear bearings	Three needle roller bearing (planetary), one two-row inclined ball bearing and one grooved ball bearing (output shaft)
Service life L_{h10}	> 100000 operating hours, ISO 281

03/12/18

5.3 CIRCULATING ACTIVATED SLUDGE TANK

03/12/18

FLYGT
a xylem brand

Project data

MiDS 9.1.14 PRO

Project name	
Case name	
Proposal number	
Customer	
Contact	
Selection by	/9/6/17
Comments	

Input Data

Wastewater > Biological Treatment

Aerobic - Aeration
Pre-treatment > No screening or screen >10 mm
Outlet location in tank Top
Type of Diffuser 9" Sanitaire
Diffusers per aerated area 0.1 #/m2
Flow per diffuser 4 Nm3/h
(note that the aeration losses are estimated)
Covered Bottom Area 5 %
Number of Aerated Zones 2 no.

Tank dimensions

Racetrack / Circular bend

Length of middle wall	21.00 m	Depth	5.00 m
Width	4.50 m	Central Guidevanes	

Product data

Number of mixers	**2**	
Mixer type	**4410**	**without jetring**
Propeller code	**400**	**Polyurethane**

Nominal thrust	1910	N	Frequency	50	Hz
Rated shaft power	2.30	kW	Phases	3	
Max input power	3.10	kW	Poles	4	
Propeller diameter	2.50	m	Approval	STD	
Propeller speed	27	rpm	Rated temperature	40 °C / 104 °F	

Thrust produced/mixer	1359	N	(2717 N total thrust produced)
Power uptake/mixer	1.78	kW	(57% of max input power)
Total thrust required	2598	N	
Recom. Min submergence	0.48	m	(Surface to propeller tip)

For mixer performance tolerances, refer to the mixer data chart.
Xylem guarantees that the proposed mixer selection will perform the specified duty when all mixers are operating positioned according to Xylem's recommendation. The selection is a function of the input data and the supplier of the data is fully responsible for its correctness.

03/12/18

Technical Specification

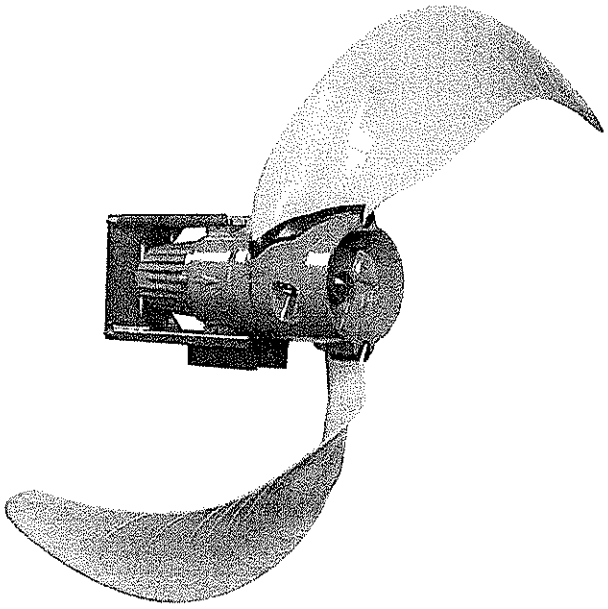

Flygt SR 4410, SR 4430, SR 4460, 50 Hz

FLYGT
a xylem brand

03/12/18

1 Technical specification

1.1 Product description

Usage

Mixer intended for mixing liquid and sludge containing fibers and solids where very high thrust in relation to consumed power is wanted. The mixer is designed to be operated completely immersed in the liquid.

Denomination

Standard version	Explosion proof version
4410.011	4410.090
4430.010	4430.090
4460.010, 4460.020	4460.090

Hydraulic unit

Thin-sectioned, non-clogging, backswept propeller with double-curved blades.

Installation

Tripod guide bar system, 100×100 mm (4×4 in), or 100×150 mm (4×6 in)

Monitoring equipment

- Thermal contacts opening at 125°C, (257°F)
- 4460.020: Thermal contacts opening at 140°C, (284°F)
- Leakage sensor in stator housing (FLS), optional
- Leakage sensor in oil housing (CLS), optional. CLS is not applicable to Ex-approved products.
- 4460.020: Leakage sensors are not available.

Cables

SUBCAB® heavy-duty submersible cable

Materials

Item	Material
Gear housing	Cast iron, ASTM 35B
Stator housing	Cast iron, ASTM 35B
Oil housing	Cast iron, ASTM 35B
Shaft	Stainless steel, ASTM/AISI 431
Propeller blades	Reinforced polyurethane plastic
Hub	Cast iron, ASTM 35B
Lifting device	Stainless steel ASTM 316L
Stand unit	Stainless steel ASTM 316L
Oil, oil housing	Paraffin oil ISO VG32
Oil, gear housing	• Mineral oil with additives, viscosity close to ISO VG 220 • 4460 optional configuration up to 60°C (140°F): Mineral oil with additives, viscosity close to ISO VG 680
O-rings	Nitrile rubber

Surface treatment

Two-component top coating on primer.

03/12/18

- Standard version
- Optional corrosion resistant version
- Optional MBBR wear resistant version

Color: Navy Gray on cast iron parts.

Shaft seals

Inner seals	Outer seal
Lip seals	Corrosion resistant cemented carbide (WCCR) / WCCR

Options and accessories

- Installation systems
- Lifting equipment
- Special cables
- Zinc anodes
- Electrical equipment such as control panels, monitoring equipment, variable frequency drives

Dimensions and weight

See the dimensional drawing.

1.2 Application limits

Data	Description
Liquid temperature	Maximum 40°C (104°F) 4460: Optional configuration up to 60°C (140°F)
Liquid viscosity	Maximum 5000 cp
pH of the mixed liquid	6–11
Depth of immersion	Maximum 20 m (65 ft)

1.3 Motor data

Feature	Description
Motor type	4410: Squirrel-cage 4- or 6-pole induction motor 4430: Squirrel-cage 2- or 4-pole induction motor 4460: Squirrel-cage 2- or 4-pole induction motor
Frequency	50 Hz
Supply	3-phase
Starting method	• Direct on-line • Star-delta • VFD
Maximum starts per hour	30 evenly-spaced starts per hour
Voltage variation	• Continuously running: Maximum ±5% • Intermittently running: Maximum ±10%
Voltage imbalance between the phases	Maximum 2%
Stator insulation	In accordance with class H (180°C, 356°F), trickle impregnated

03/12/18

1.4 Motor Rating

Table 1: 400V, 50 Hz, 3-phase

Product	Propeller diameter, maximum mm	Rotations per minute, rpm	Poles	Rated Power, kW	Rated Current, A	Starting Current, A	Power factor cosφ
4410	2500	1385	4	2.3	5.5	24	0.82
4410	2500	930	6	0.9	2.7	10	0.67
4430	2500	1420	4	4.3	9.1	38	0.84
4430	1600	2875	2	4.4	8.5	65	0.92
4460.010/090	2500	1455	4	5.7	12	78	0.84
4460.010/090	1300	2900	2	7.5	14	116	0.91
4460.020	1300	2930	2	12.0	22	213	0.86

1.5 Thrust data

Performance measurement standard

Performance according to ISO 21630:2007.

SR 4410

Table 2: 4-pole 3-phase, 2.3 kW, 2-bladed propeller (1 of 2)

Speed, rpm	Diameter: 1.4 m			Diameter: 1.5 m			Diameter: 1.6 m			Diameter: 1.7 m		
	F_{thrust} N	P_{in} kW	Prop. code	F_{thrust} N	P_{in} kW	Prop. code	F_{thrust} N	P_{in} kW	Prop. code	F_{thrust} N	P_{in} kW	Prop. code
26	410	0.70	447	510	0.77	446	620	0.84	445	720	0.90	444
28	470	0.79	407	590	0.87	406	710	0.95	405	830	1.04	404
30	550	0.92	457	700	1.03	456	840	1.14	455	980	1.24	454
32	640	1.05	417	800	1.19	416	960	1.32	415	1110	1.45	414
35	760	1.28	467	960	1.46	466	1150	1.64	465	1330	1.82	464
39	940	1.64	427	1170	1.90	426	1400	2.15	425	1610	2.40	424
41	1020	1.82	477	1270	2.11	476	1510	2.40	475	-	-	-
46	1240	2.39	437	-	-	-	-	-	-	-	-	-

Table 3: 4-pole 3-phase, 2.3 kW, 2-bladed propeller (2 of 2)

Speed, rpm	Diameter: 1.8 m			Diameter: 2.0 m			Diameter: 2.2 m			Diameter: 2.5 m		
	F_{thrust} N	P_{in} kW	Prop. code	F_{thrust} N	P_{in} kW	Prop. code	F_{thrust} N	P_{in} kW	Prop. code	F_{thrust} N	P_{in} kW	Prop. code
26	820	0.97	443	1050	1.11	442	1330	1.30	441	1690	1.42	440
28	940	1.12	403	1200	1.35	402	1510	1.53	401	1890	1.65	400
30	1110	1.35	453	1410	1.64	452	1760	1.87	451	2160	1.99	450
32	1260	1.59	413	1610	1.94	412	1980	2.22	411	2400	2.33	410
35	1500	1.99	463	1900	2.46	462	-	-	-	-	-	-

03/12/18

Table 4: 6-pole 3-phase, 0.9 kW, 2-bladed propeller (1 of 2)

Speed, rpm	Diameter: 1.4 m			Diameter: 1.5 m			Diameter: 1.6 m			Diameter: 1.7 m		
	F_{thrust} N	P_{in} kW	Prop. code	F_{thrust} N	P_{in} kW	Prop. code	F_{thrust} N	P_{in} kW	Prop. code	F_{thrust} N	P_{in} kW	Prop. code
17	180	0.37	647	230	0.39	646	280	0.41	645	320	0.43	644
19	210	0.40	607	260	0.42	606	320	0.45	605	370	0.48	604
20	250	0.44	657	310	0.48	656	380	0.51	655	440	0.54	654
22	280	0.49	617	360	0.53	616	430	0.57	615	500	0.61	614
24	340	0.56	667	430	0.62	666	520	0.67	665	600	0.73	664
26	420	0.69	627	530	0.76	626	640	0.84	625	740	0.91	624

Table 5: 6-pole 3-phase, 0.9 kW, 2-bladed propeller (2 of 2)

Speed, rpm	Diameter: 1.8 m			Diameter: 2.0 m			Diameter: 2.2 m			Diameter: 2.5 m		
	F_{thrust} N	P_{in} kW	Prop. code	F_{thrust} N	P_{in} kW	Prop. code	F_{thrust} N	P_{in} kW	Prop. code	F_{thrust} N	P_{in} kW	Prop. code
17	370	0.45	643	470	0.51	642	600	0.55	641	810	0.61	640
19	420	0.50	603	540	0.57	602	680	0.62	601	920	0.70	600
20	500	0.57	653	630	0.67	652	800	0.73	651	1060	0.82	650
22	570	0.65	613	720	0.77	612	910	0.85	611	1190	0.95	610
24	680	0.78	663	860	0.93	662	1080	1.05	661	1390	1.16	660
26	830	0.99	623	-	-	-	-	-	-	-	-	-

SR 4430

Table 6: 4-pole 3-pahse, 4.3 kW, 2-bladed propeller (1 of 2)

Speed, rpm	Diameter: 1.4 m			Diameter: 1.5 m			Diameter: 1.6 m			Diameter: 1.7 m		
	F_{thrust} N	P_{in} kW	Prop. code	F_{thrust} N	P_{in} kW	Prop. code	F_{thrust} N	P_{in} kW	Prop. code	F_{thrust} N	P_{in} kW	Prop. code
26	410	0.68	447	520	0.75	446	630	0.82	445	740	0.89	444
28	480	0.77	407	600	0.85	406	730	0.94	405	850	1.02	404
31	570	0.90	457	720	1.01	456	860	1.12	455	1010	1.23	454
33	650	1.03	417	820	1.17	416	990	1.31	415	1160	1.44	414
36	790	1.26	467	990	1.45	466	1200	1.63	465	1400	1.81	464
40	980	1.63	427	1240	1.89	426	1490	2.15	425	1730	2.40	424
42	1070	1.81	477	1350	2.10	476	1620	2.40	475	1880	2.69	474
47	1330	2.40	437	1670	2.81	436	2000	3.22	435	2320	3.63	434

Table 7: 4-pole 3-pahse, 4.3 kW, 2-bladed propeller (2 of 2)

Speed, rpm	Diameter: 1.8 m			Diameter: 2.0 m			Diameter: 2.2 m			Diameter: 2.5 m		
	F_{thrust} N	P_{in} kW	Prop. code	F_{thrust} N	P_{in} kW	Prop. code	F_{thrust} N	P_{in} kW	Prop. code	F_{thrust} N	P_{in} kW	Prop. code
26	840	0.95	443	1080	1.14	442	1370	1.29	441	1740	1.40	440
28	970	1.10	403	1250	1.33	402	1570	1.52	401	1970	1.63	400
31	1150	1.34	453	1480	1.63	452	1850	1.86	451	2270	1.97	450
33	1320	1.58	413	1700	1.94	412	2110	2.21	411	2550	2.31	410
36	1590	1.99	463	2040	2.46	462	2510	2.81	461	2960	2.86	460

03/12/18

Speed, rpm	Diameter: 1.8 m			Diameter: 2.0 m			Diameter: 2.2 m			Diameter: 2.5 m		
	F_{thrust} N	P_{in} kW	Prop. code	F_{thrust} N	P_{in} kW	Prop. code	F_{thrust} N	P_{in} kW	Prop. code	F_{thrust} N	P_{in} kW	Prop. code
40	1970	2.65	423	2530	3.31	422	3060	3.76	421	3500	3.68	420
42	2140	2.98	473	2740	3.73	472	3300	4.21	471	3720	4.06	470
47	2630	4.04	433	-	-	-	-	-	-	-	-	-

Table 8: 2-pole 3-phase, 4.4 kW, 2-bladed propeller

Speed, rpm	Diameter: 1.4 m			Diameter: 1.5 m			Diameter: 1.6 m		
	F_{thrust} N	P_{in} kW	Prop. code	F_{thrust} N	P_{in} kW	Prop. code	F_{thrust} N	P_{in} kW	Prop. code
52	1590	3.20	247	2000	3.75	246	2400	4.30	245
55	1820	3.83	207	-	-	-	-	-	-

SR 4460

Table 9: 4-pole 3-phase, 5.7 kW, 2-bladed propeller (1 of 2)

Speed, rpm	Diameter: 1.7 m			Diameter: 1.8 m			Diameter: 2.0 m		
	F_{thrust} N	P_{in} kW	Prop. code	F_{thrust} N	P_{in} kW	Prop. code	F_{thrust} N	P_{in} kW	Prop. code
36	1420	2.09	464	1620	2.27	463	2090	2.74	462
41	1770	2.68	424	2020	2.93	423	2610	3.59	422
42	1930	2.97	474	2210	3.26	473	2850	4.01	472
47	2410	3.91	434	2740	4.32	433	3530	5.38	432

Table 10: 4-pole 3-phase, 5.7 kW, 2-bladed propeller (2 of 2)

Speed, rpm	Diameter: 2.2 m			Diameter: 2.5 m		
	F_{thrust} N	P_{in} kW	Prop. code	F_{thrust} N	P_{in} kW	Prop. code
36	2580	3.09	461	3030	3.12	460
41	3170	4.03	421	3600	3.93	420
42	3440	4.48	471	3850	4.30	470
47	4200	5.92	431	4500	5.38	430

Table 11: 2-pole 3-phase, 7.5 kW, 3-bladed propeller

Speed, rpm	Diameter: 1.3 m		
	F_{thrust} N	P_{in} kW	Prop. code
69	3000	8.50	289

Table 12: 2-pole 3-phase, 12 kW, 3-bladed propeller

Speed, rpm	Diameter: 1.3 m		
	F_{thrust} N	P_{in} kW	Prop. code
80	4000	13.00	219

03/12/18

Xylem |'zīləm|

1) The tissue in plants that brings water upward from the roots
2) A leading global water technology company

We're a global team unified in a common purpose: creating innovative solutions to meet our world's water needs. Developing new technologies that will improve the way water is used, conserved, and re-used in the future is central to our work. We move, treat, analyze, and return water to the environment, and we help people use water efficiently, in their homes, buildings, factories and farms. In more than 150 countries, we have strong, long-standing relationships with customers who know us for our powerful combination of leading product brands and applications expertise, backed by a legacy of innovation.

For more information on how Xylem can help you, go to xyleminc.com

Refer to www.xylemwatersolutions.com/contacts/ for contact details of your local sales and service representative.

xylem
Let's Solve Water

Xylem Water Solutions Global
Services AB
361 80 Emmaboda
Sweden
Tel: +46-471-24 70 00
Fax: +46-471-24 47 01
http://tpi.xyleminc.com

Visit our Web site for the latest version of this document and more information

The original instruction is in English. All non-English instructions are translations of the original instruction.

© 2012 Xylem Inc

882632_5.0_en-US_2015-07_TS_4410_4430_4460_50Hz

03/12/18

DNV·GL

MANAGEMENT SYSTEM CERTIFICATE

Certificate No:
2007-SKM-AQ-2512 / 2007-SKM-AE-1239

Initial certification date:
13, June, 2007

Valid:
31, December, 2016 -15, September, 2018

This is to certify that the management system of

Xylem Europe

Bleicheplatz 6, 8200 SCHAFFHAUSEN, Switzerland
and the sites as mentioned in the appendix accompanying this certificate

has been found to conform to the Management System standards:
ISO 9001:2008/ ISO 14001:2004
(See specification in Appendix)

This certificate is valid for the following scope:
Providing water, wastewater and fluid technologies and solutions including associated parts and services.

Place and date:
Solna, 21, December, 2016

SWEDAC ACKREDITERING
1053
ISO/IEC 17021

For the issuing office:
DNV GL - Business Assurance
Box 6046/Hemvärnsgatan 9, 171 06,
Solna, Sweden

Ann-Louise Pått
Management Representative

Lack of fulfilment of conditions as set out in the Certification Agreement may render this Certificate invalid.
ACCREDITED UNIT: DNV GL Business Assurance Sweden AB, Box 6046, 171 06 Solna. Sweden. TEL: +46 8 587 940 00. http://assurance.dnvgl.com

03/12/18

Certificate No: 2007-SKM-AQ-2512 / 2007-SKM-AE-1239
Place and date: Solna, 21, December, 2016

Appendix to Certificate

Xylem Europe GmbH
Locations included in the certification are as follows:

Site Name	Site Address	Site Scope	ISO 9001	ISO 14001
Headquarters				
Xylem Europe GmbH	Bleicheplatz 6, 8200 SCHAFFHAUSEN, Switzerland	Management, Business Development, Marketing and Procurement of Pumping, Mixing, Monitoring & Control Systems, Aeration Systems, integrated treatment systems and associated parts and services.	X	X
Service and manufacturing companies				
Xylem Manufacturing Austria GmbH	Ernst Vogel Straße 2, 2000 STOCKERAU, Austria	Manufacturing of pumps, control units, pumping stations and booster units. Production of general machinery items.	X	X
Xylem Service Austria GmbH	Ernst Vogel Straße 2, 2000 STOCKERAU, Austria	Design of pumps, control units, pumping stations and booster units. Marketing of monitoring and control units. Technical engineering support (intercompany) and customer training for pump units.	X	X
Xylem Water Solutions Metz SAS	Rue Marcel Dassault, F-57365 ENNERY, France	Distribution and Stockholding of Pumping and Mixing Systems and associated parts and products.	X	
Xylem Water Solutions Herford GmbH	• Boschstr. 4 – 14, 32051 HERFORD, Germany • Ruhrtalstraße 94, ESSEN, Germany	Manufacturing of components and systems for water treatment using UV-light and ozone technology and of UV-lamps including commissioning.	X	X
Xylem Services GmbH	Boschstr. 4 – 14, 32051 HERFORD, Germany	Research, Development and Sales of components and systems for water treatment using UV-light and ozone technology and of UV-lamps including commissioning and technical service.	X	X

03/12/18

Certificate No: 2007-SKM-AQ-2512 / 2007-SKM-AE-1239
Place and date: Solna, 21, December, 2016

Xylem Service Hungary Kft.	2700, CEGLÉD, Külső-Kátai 41, Hungary	Design and sales of: wet rotor circulators, condensate removal pumps and computer cooling pumps.	X	X
Xylem Water Systems Hungary Kft.	2700, CEGLÉD, Külső-Kátai 41, Hungary	Production of: wet rotor circulators, condensate removal pumps and computer cooling pumps.	X	X
Lowara Vogel Polska Sp. z o.o.	Ul. Kazimiera Wielkiego 5, 57100 Strzelin, Poland	Production of submersible pumps, hydraulic components, electrical motors, circulators and end suction pumps, by means of machining, welding, painting, assembly, testing and packaging.	X	X
Lowara S.r.l. Unipersonale	Via Dottor Vittorio Lombardi, 14 - 36075 MONTECCHIO MAGGIORE - Italy	Production of: SES (Sump Effluent and Sewage) pumps, centrifugal pumps, vertical and horizontal multistage, self-priming pumps, peripheral pumps, surface motors, prefabricated lifting station for waste water entrained solids, boosters in line pumps.	X	
Xylem Service Italia S.r.l.	Via Dottor Vittorio Lombardi, 14 - 36075 MONTECCHIO MAGGIORE - Italy	Design, trade, sales and services of: submersible deep well pumps, SES (Sump Effluent and Sewage) pumps, centrifugal pumps, vertical and horizontal multistage, self-priming pumps, peripheral pumps, submersible motors, surface motors, prefabricated lifting station for waste water entrained solids, boosters, in line pumps, circulators, frequency converters, filters, accessories for water pumping applications.	X	
Xylem Water Solutions Manufacturing AB	361 80 EMMABODA, Sweden	Manufacturing and Procurement of Pumping and Mixing Systems and associated parts and products.	X	X
Xylem Water Solutions Global Services AB	361 80 EMMABODA, Sweden	Management, Procurement, Distribution and Stockholding of Pumping and Mixing	X	X

03/12/18

Certificate No: 2007-SKM-AQ-2512 / 2007-SKM-AE-1239
Place and date: Solna, 21, December, 2016

		Systems and associated parts and products.		
Xylem Water Solutions Global Services AB	Gesällvägen 33, 174 87 SUNDBYBERG, Sweden	Management, Business Development, Product Development, Marketing and Procurement of Pumping, Mixing, Monitoring & Control Systems, Aeration Systems and associated parts and services.	X	X
Xylem Water Process Ltd	Bingley Road, HODDESDON, Herts, EN11 0BU, United Kingdom	Manufacture of: marine engine cooling pumps, flexible impeller pumps, rotary lobe pumps for the processing industry, general industrial customer requirements for the following industries, chemical, pharmaceutical, engineering, food and automotive. Air and electrical operated pumps for a variety of fluid handling systems in the beverage and food service markets.	X	X
Xylem Water Services Ltd	Bingley Road, HODDESDON, Herts, EN11 0BU, United Kingdom	Design and development of: marine engine cooling pumps, flexible impeller pumps, rotary lobe pumps for the processing industry, general industrial customer requirements for the following industries, chemical, pharmaceutical, engineering, food and automotive. Air and electrical operated pumps for a variety of fluid handling systems in the beverage and food service markets.	X	X
Xylem Water Services Ltd	Quenington Cirencester Gloucestershire GL7 5BX UK	Design of centrifugal pumping equipment and system packages.	X	
Xylem Dewatering Solutions UK Ltd	Quenington Cirencester Gloucestershire GL7 5BX UK	Manufacture of centrifugal pumping equipment and system packages.	X	

03/12/18

Certificate No: 2007-SKM-AQ-2512 / 2007-SKM-AE-1239
Place and date: Solna, 21, December, 2016

Sales companies				
Xylem Water Solutions Austria GmbH	• Ernst Vogel Straße 2, 2000 STOCKERAU, Austria • Haidestraße 41, 4600 WELS, Austria • Messerschmittweg 7a, 6175 KEMATEN, Austria	Sales, after sales, service and repair of pumps, control units, pumping stations and booster units. Technical engineering support for end users and customer training for pumps units.	X	X
Xylem Water Solutions France SAS	• Parc des Aqueducs Chemin du Favier CD 42, 69230 ST-GENIS-LAVAL, France • PARC de la Plaine, 13 Allee de la Briqueterie, 59493 VILLENEUVE DASCQ, France • 31 Rue D´Athenes, ZI les Estroublans 13127 VITROLLES, France • Route d´Ingremare, 27400 HEUDEBOUVILLE, France • ZI Magellan, 12 rue Eugene Chevreul, BP70177, 33607 PESSAC, France • ZAC de la Richardière - 12 rue Lépine, 35530 NOYAL SUR VILLAINE, France • Rue de l'Industrie, BP40425, 67412 ILLKIRCH, France • 8 allée Paul Harris, CS 62504, 31018 TOULOUSE CEDEX 2, France • Aéronef - Bat B 27, Rue de la Milletière, 37073 TOURS, France • 36 rue de Grande Bretagne cedex, 5805, 44470 CARQUEFOU CEDEX, France • Parc de L´Ile 29 Rue du Port, 92022 NANTERRE CEDEX, France	Marketing, Sales, Installation, Rental, Service and Maintenance of Pumps, Mixers, Monitoring & Control Systems, Aeration Systems, integrated treatment systems and associated parts and products.	X	
Xylem Water Solutions Deutschland GmbH	• Oststrasse 28, 22844 NORDERSTEDT, Germany • Bayernstraße 11, 30855 LANGENHAGEN, Germany	Marketing, Sales, Installation, Rental, Service and Maintenance of Pumps, Mixers, Monitoring & Control systems, Aeration Systems,	X	

03/12/18

Certificate No: 2007-SKM-AQ-2512 / 2007-SKM-AE-1239
Place and date: Solna, 21, December, 2016

		integrated treatment systems and associated parts and products.		
Xylem Water Solutions Nederland BV	Pieter Zeemanweg 240, 3316GZ DORDRECHT, Netherlands	Marketing, Sales, Installation, Rental, Service and Maintenance of Pumps, Mixers, Monitoring & Control Systems, Aeration Systems, integrated treatment systems and associated parts and products.	X	
Xylem Water Solutions Italia S.r.l	• Via G. Rossini 1/a - 20020 LAINATE – MI, Italy • Via Nicola Tridente, 22 - 70125 BARI – Italy • P.za Ruggeri, 3 - 09030 ELMAS - CA – Italy • Via Acicastello, 15/D - 95126 CATANIA – Italy • Centro Direzionale - Viale della, Costituzione, Is. A3 Sc. A - int.502-503 - 80143 NAPOLI - Italy • Centro Direzionale Benelli - Via Mameli, 42 int. 110-111 - 61100 PESARO – Italy • Via Sansovino, 217 - 10151 TORINO – Italy • Via Tito Speri 27/29 - 00040 POMEZIA -RM – Italy • Via Emilia Romagna, 23 - 35020 SAONARA-PD, Italy • Via G. pastore, 47 Zona artigianale di Viserba Monte – 47811 RIMINI – RN - Italy	Marketing, Sales, Installation, Rental, Service and Maintenance of Pumps, Mixers, Monitoring & Control Systems, Aeration Systems, integrated treatment systems and associated parts and products.	X	
Xylem Water Solutions Ireland Ltd	• 50, Broomhill Close Airton Road, DUBLIN, 24, Ireland • Unit 5 & 7 Hydepark Commercial Centre, 10 Hydepark Road, Mallusk, Newtownabbey, BELFAST, BT36 4PY UK, United Kingdom	Engineering, Design, Marketing, Sales, Supply, Installation, Rental, Service and Maintenance of water and wastewater process equipment, monitoring & control systems aeration, ozone, UV treatment, Variable Speed Drives and associated equipment, involved in water and wastewater pumping	X	X

03/12/18

Certificate No: 2007-SKM-AQ-2512 / 2007-SKM-AE-1239
Place and date: Solna, 21, December, 2016

		systems, waste water treatment systems, tankerage, oil separators and drainage systems.		
Xylem Water Solutions UK Ltd	• Private Road Number 1, Colwick, Industrial Est, Colwick, NOTTINGHAMN, NG4 2AN, United Kingdom • Milwey Rise Ind Est, AXMINSTER, United Kingdom • Unit 2 A1 Parkway Orton, SOUTHGATE, PE2 6YN, United Kingdom • Unit 6D/E, Bandeath Ind Estate Throsk, STIRLING, FK7 7 NP, United Kingdom • Unit 2, Church End Farm, Ware, LITTLE HADAM, SG11 2DY, United Kingdom • Unit 9/10 Chunnel Estate, Victoria Crecent, ASHFORD, Kent, TN23 7HL, United Kingdom • Busby Stoop Trading Estate, Ripon Road, THIRSK, Yorkshire, YO7 4EQ, United Kingdom • 28 Rufford Court, Woolston, WARRINGTON, United Kingdom • 1 Longman Drive, INVERNESS, IV1 1SU UK, United Kingdom • 106 Hawley Lane, Farnborough, Hampshire, FARNBOROUGH, GU14 8JE, United Kingdom • Unit 1500 Blueprint Industrial Estate Dundas Spur Portsmouth Hampshire PO3 5RN, United Kingdom	Engineering, Design, Marketing, Sales, Supply, Installation, Rental, Service and Maintenance of water and wastewater process equipment, monitoring & control systems aeration, ozone, UV treatment, Variable Speed Drives and associated equipment, involved in water and wastewater pumping systems, waste water treatment systems, tankerage, oil separators and drainage systems.	X	X
Xylem Water Solutions UK Ltd	Bingley Road, HODDESDON, Herts, EN11 0BU, United Kingdom	Sales of: marine engine cooling pumps, flexible impeller pumps, rotary lobe pumps for the processing industry, general industrial customer requirements	X	X

03/12/18

Certificate No: 2007-SKM-AQ-2512 / 2007-SKM-AE-1239
Place and date: Solna, 21, December, 2016

		for the following industries, chemical, pharmaceutical, engineering, food and automotive. Air and electrical operated pumps for a variety of fluid handling systems in the beverage and food service markets.		
Xylem Water Solutions Norge AS	• Evjenveien 108, 9024 TROMSÖ, Norway • Pålsvei 1, 8008 BODÖ, Norway • Stålfjæra 14, 0975 OSLO, Norway • Forusskogen 1, 4031 STAVANGER, Norway • Hardangerveien 72, 5224 BERGEN, Norway • Birkebeinerveien 21, 2301 HAMAR, Norway • Skibåsen 42 C, 4636 KRISTIANSAND, Norway • Fossegrenda 13 B, 7038 TRONDHEIM, Norway • Myrabakken Naerringssenter, 6022 ÅLESUND, Norway	Marketing, Sales, Installation, Rental, Service and Maintenance of Pumps, Mixers, Monitoring & Control Systems, Aeration Systems, integrated treatment systems and associated parts and products.	X	X
Xylem Water Solutions Sweden AB	• Gesällvägen 33, 174 53 SUNDBYBERG, Sweden • 361 80 EMMABODA, Sweden • Pjältvägen 10, 616 34 ÅBY, Sweden • Betongvägen 9, 982 38 GÄLLIVARE, Sweden • Boställsvägen 4, 702 27 ÖREBRO, Sweden • Boplatsgatan 2A, 213 76 MALMÖ, Sweden • Torpslingan 17, 973 47 LULEÅ, Sweden • Timmervägen 6, 857 53 SUNDSVALL, Sweden • Vaksala-Eke, Hus G, 755 94 UPPSALA, Sweden • Exportgatan 38 D, 422 46 HISINGS BACKA, Sweden • Förrådsgatan 32, 542 35 MARIESTAD,	Marketing, Sales, Installation, Rental, Service and Maintenance of Pumps, Mixers, Monitoring & Control Systems, Aeration Systems, integrated treatment systems and associated parts and products.	X	X

03/12/18

Certificate No: 2007-SKM-AQ-2512 / 2007-SKM-AE-1239
Place and date: Solna, 21, December, 2016

	Sweden • Stormgatan 15, 652 21 KARLSTAD, Sweden • Norra Obbolavägen 89, 904 22 UMEÅ, Sweden			
Grindex AB	Gesällvägen 33, 174 53 SUNDBYBERG, Sweden	Management, Business Development, Marketing, Sales and Rental of pumping systems and associated parts and products. The following processes are outsourced within Xylem: Engineering & Design, Production and Distribution of pumping systems, Stockholding and Supply of associated parts and products.	X	X

03/12/18

ROBUSCHI
GARDNER DENVER S.r.l. - Divisione ROBUSCHI
Via S.Leonardo, 71/A - 43122 Parma – Italy
Phone +39 0521 274911
info.italy@gardnerdenver.com
www.robuschi.com

ROBOX

SELECTION

International Measuring System (S.I.)

ROBUSCHI QUALITY ASSURED COMPANY ICIM ISO 9001

MODEL : ES 65 /2 P

Quantity :

GENERAL DATA

Ref.	:	Plant	: Denilovgrad
Customer	: KARKANIAS	Item	: Aeration Tank
		Service	: Waste water treatement

FLUID

Fluid	: Atmospheric air				
Spec. W.ght (kg/m^3)	: 1.134	Spec. Heat Cp (kJ/kg°C)	: 1.010	Spec. Heat Cv (kJ/kg°C)	: 0.723
Altitude (m)	: 0	Pressure (mbar)	: 1,013	Temperature (°C)	: 35
Relative humidity (%)	: 50				

TECHNICAL DATA

Delivery (m^3/h)	Q1	: 930 FAD	*Delivery (Nm^3/h)	Q2	: 776	*Delivery (kg/h)	Q3 : 1,003
			***Delivery T (Nm^3/h)	Q2T	: 798	***Delivery T (kg/h)	Q3T : 1.021
Delivery (m^3/h)	Q4	:	*Delivery (Nm^3/h)	Q4	:	*Delivery (kg/h)	Q4 :
Speed (rpm)	n4	:	***Delivery T (Nm^3/h)	Q4T	:	***Delivery T (kg/h)	Q4T :
Dif.pressure (mbar)	DP	: 620	Inlet press. (mbar a)	P1	: 1,013	Outlet pres.(mbar a)	P2 : 1,633
Temp.rise(°C)	DT	: 70	Inlet temp.(°C)	T1	: 45	Outlet temp.(°C)	T2 : 115
			Spec.W.ght (kg/m^3)	SW	: 1.098	H2O injection (lt/min)	ia : 0.00
Abs.ed Power (kW)	N	: 22.0	**Sound Pressure Level (dBA)		: 74	Heat radiation (kW)	Wd : 1.9
Speed (rpm)	n	: 3,366	n/nmax (%)		: 86		
Volumetric efficiency (%)		: 85.3	Adiabatic efficiency (%)		: 83.6	Total efficiency (%)	: 60.9

*The Nm3/h and kg/h capacity are referred to the dry part of the conveyed gas/vapour mixture according DIN 1343
**Estimated sound pressure level at 1 m, free field with soundproof piping

***The Nm3/h and kg/h capacity are referred to total conveyed gas/vapour mixture

FAD measured as per ISO1217, performances tolerances as per Robuschi procedure TE1.S.0015 (Q1 =±5%*nmx/n; N=±5%)

ELECTRIC MOTOR

IEC Motor	: 200LA	Hz	: 50		
Power (kW)	: 30.0	Poles	: 2	V	: 380-420 D / 660-690 Y
Speed (rpm)	: 2,945	Size	:		

TRANSMISSION

Coupling type :

V-belt type	: XPA	Length (mm)	: 1,522	Shaft centres (mm)	: 525
Grooves	: 4	Mot.pulley Diam. (mm)	: 160	Blower pulley diam. (mm)	: 140
(Int.Code C479)		(Int.Code 110M)		(Int.Code S108)	

WARNING

No warning

03/12/18

ROBUSCHI
GARDNER DENVER S.r.l. - Divisione ROBUSCHI
Via S.Leonardo, 71/A - 43122 Parma – Italy
Phone +39 0521 274911
info.italy@gardnerdenver.com
www.robuschi.com

ROBOX

OPERATING CURVES

International Measuring System (S.I.)

ROBUSCHI QUALITY ASSURED COMPANY ICIM ISO 9001

MODEL : **ES 65 /2 P** Quantity :

GENERAL DATA

Ref.	:	Plant	: Denilovgrad
Customer	: KARKANIAS	Item	: Aeration Tank
		Service	: Waste water treatement

FLUID

Fluid	: Atmospheric air				
Spec. W.ght (kg/m^3)	: 1.134	Spec. Heat Cp (kJ/kg°C)	: 1.010	Spec. Heat Cv (kJ/kg°C)	: 0.723
Altitude (m)	: 0	Pressure (mbar)	: 1,013	Temperature (°C)	: 35
Relative humidity (%)	: 50				

OPERATION POINT

Inlet press. (mbar a)	P1	: 1,013	Inlet temp.(°C)	T1	: 45	Spec.W.ght (kg/m^3)	SW : 1.098
Delivery (Nm^3/h)	Q2	: 776	Dif.pressure (mbar)	DP	: 620	Cp / Cv	: 1.4
Abs.ed Power (kW)	N	: 22.0	Speed (rpm)	n	: 3,366	n/nmax (%)	: 86

FAD measured as per ISO1217, performances tolerances as per Robuschi procedure TE1.S.0015 (Q1 =±5%*nmx/n; N=±5%)

Operating curve (Q2 , N) ==> n

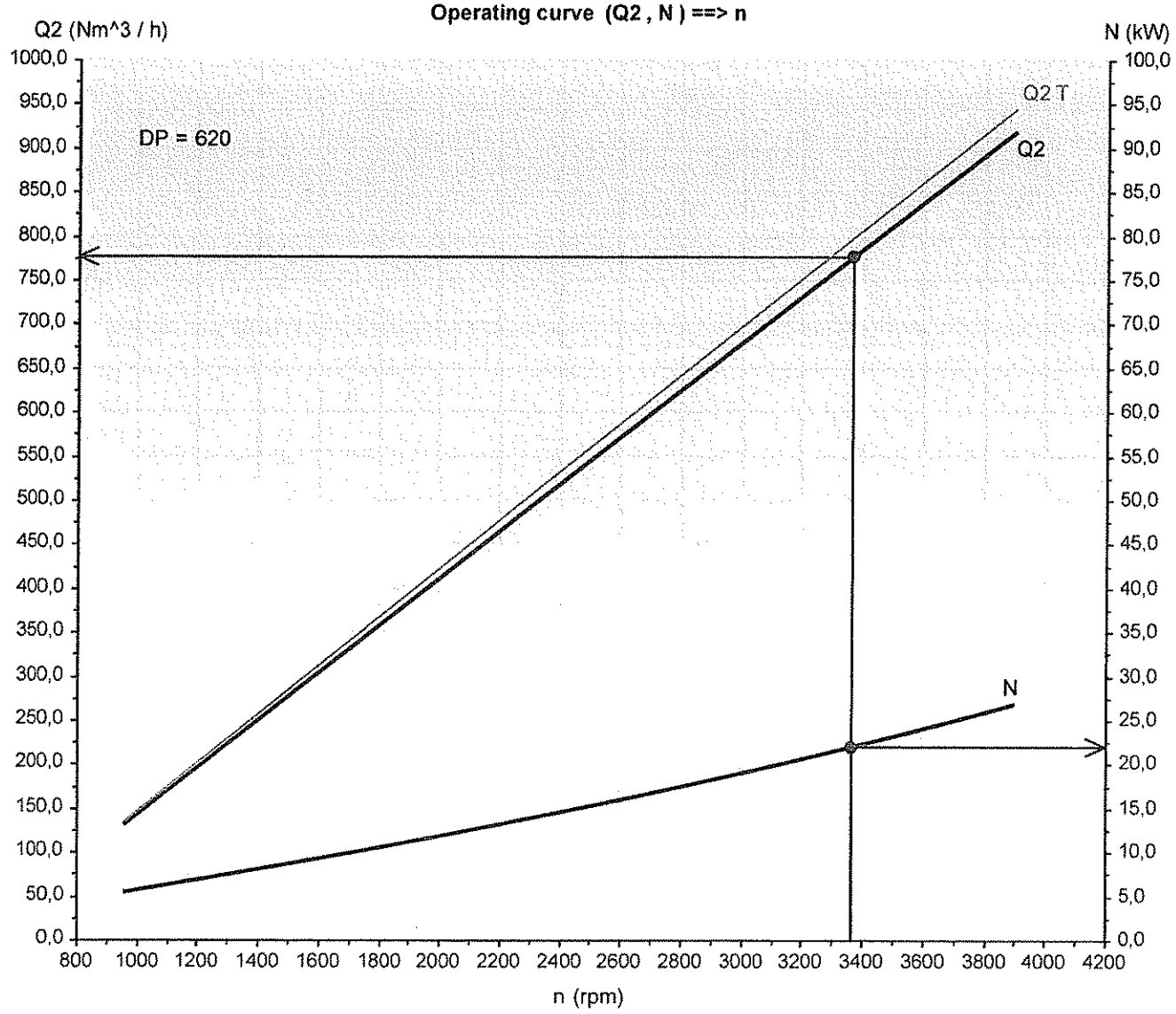

03/12/18

ROBUSCHI
GARDNER DENVER S.r.l. - Divisione ROBUSCHI
Via S.Leonardo, 71/A - 43122 Parma – Italy
Phone +39 0521 274911
info.italy@gardnerdenver.com
www.robuschi.com

ROBOX

OPERATING CURVES

International Measuring System (S.I.)

ROBUSCHI QUALITY ASSURED COMPANY ICIM ISO 9001 - Cert. n. 0251

MODEL : **ES 65 /2 P** Quantity :

GENERAL DATA

Ref.	:	Plant	: Denilovgrad
Customer	: KARKANIAS	Item	: Aeration Tank
		Service	: Waste water treatement

FLUID

Fluid	: Atmospheric air				
Spec. W.ght (kg/m^3)	: 1.134	Spec. Heat Cp (kJ/kg°C)	: 1.010	Spec. Heat Cv (kJ/kg°C)	: 0.723
Altitude (m)	: 0	Pressure (mbar)	: 1,013	Temperature (°C)	: 35
Relative humidity (%)	: 50				

OPERATION POINT

Inlet press. (mbar a)	P1	: 1,013	Inlet temp.(°C)	T1	: 45	Spec.W.ght (kg/m^3)	SW : 1.098
Delivery (Nm^3/h)	Q2	: 776	Dif.pressure (mbar)	DP	: 620	Cp / Cv	: 1.4
Temp.rise(°C)	DT	: 70	Speed (rpm)	n	: 3,366	n/nmax (%)	: 86

FAD measured as per ISO1217, performances tolerances as per Robuschi procedure TE1.S.0015 (Q1 =±5%*nmx/n; N=±5%)

Operating curve (Q2 , DT) ==> n

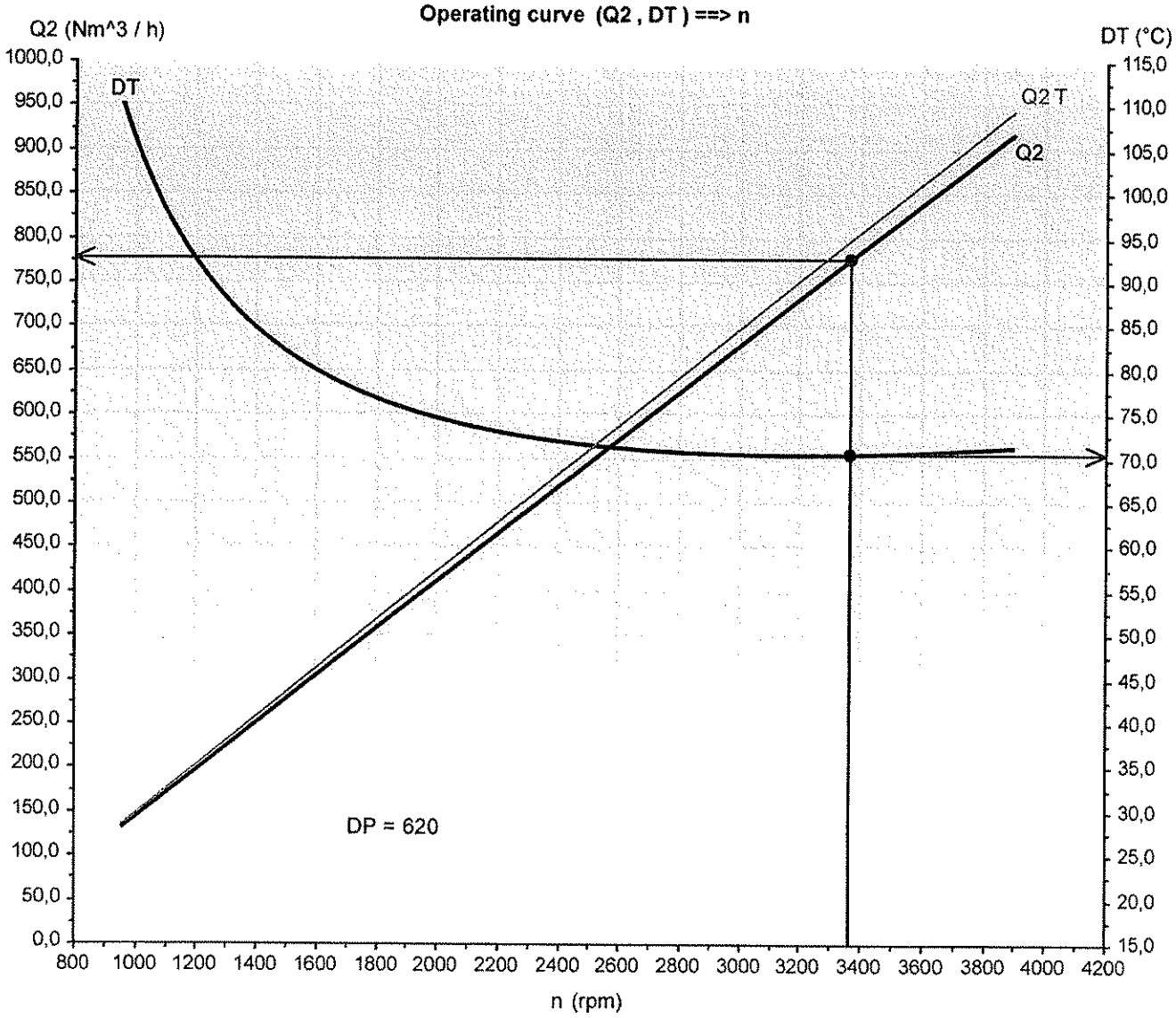

03/12/18

CISQ is a member of

IQNet

www.iqnet-certification.com

IQNet, the association of the world's first class certification bodies, is the largest provider of management System Certification in the world. IQNet is composed of more than 30 bodies and counts over 150 subsidiaries all over the globe.

ICIM

www.icim.it

CERTIFICATO n. / *CERTIFICATE No.* **0251/7**

SI CERTIFICA CHE IL SISTEMA DI GESTIONE PER LA QUALITA' DI
WE HEREBY CERTIFY THAT THE QUALITY MANAGEMENT SYSTEM OPERATED BY

Gardner Denver S.r.l.
Divisione ROBUSCHI

UNITA' OPERATIVE
OPERATIVE UNITS

Via S. Leonardo, 71/A - 43100 Parma (PR)
Italia

E' CONFORME ALLA NORMA
IS IN COMPLIANCE WITH THE STANDARD

UNI EN ISO 9001:2008

PER LE SEGUENTI ATTIVITA'
FOR THE FOLLOWING ACTIVITIES

EA: 18

Progettazione, produzione e assistenza di compressori a lobi, compressori a vite, pompe centrifughe e pompe per vuoto ad anello liquido.

Design, production and service of blowers, screw compressors, centrifugal pumps and liquid ring vacuum pumps.

Riferirsi al Manuale della Qualità per l'applicabilità dei requisiti della norma di riferimento.
Refer to Quality Manual for details of application to reference standard requirements

Il presente certificato è soggetto al rispetto del regolamento per la certificazione dei sistemi di gestione per la qualità delle aziende.
The use and the validity of this certificate shall satisfy the requirements of the rules for the certification of company quality management systems.

Data emissione *First issue*	Emissione corrente *Current issue*	Data di scadenza *Expiring date*
16/01/1995	11/12/2015	14/09/2018

ICIM S.p.A.
Piazza Don Enrico Mapelli, 75 - 20099 Sesto San Giovanni (MI)

CISQ è la Federazione Italiana di Organismi di Certificazione dei sistemi di gestione aziendale.

CISQ is the Italian Federation of management system Certification Bodies.

ACCREDIA
ENTE ITALIANO DI ACCREDITAMENTO

SGQ N° 004A SSI N° 008G
SGA N° 005D PRD N° 093B
SCR N° 006F ISP N° 046E
PRS N° 082C GHG N° 035M

Membro degli Accordi di Mutuo Riconoscimento EA, IAF e ILAC
Signatory of EA, IAF and ILAC Mutual Recognition Agreements

FEDERAZIONE CISQ

www.cisq.com

03/12/18

ROBUSCH®

Environmental Solutions

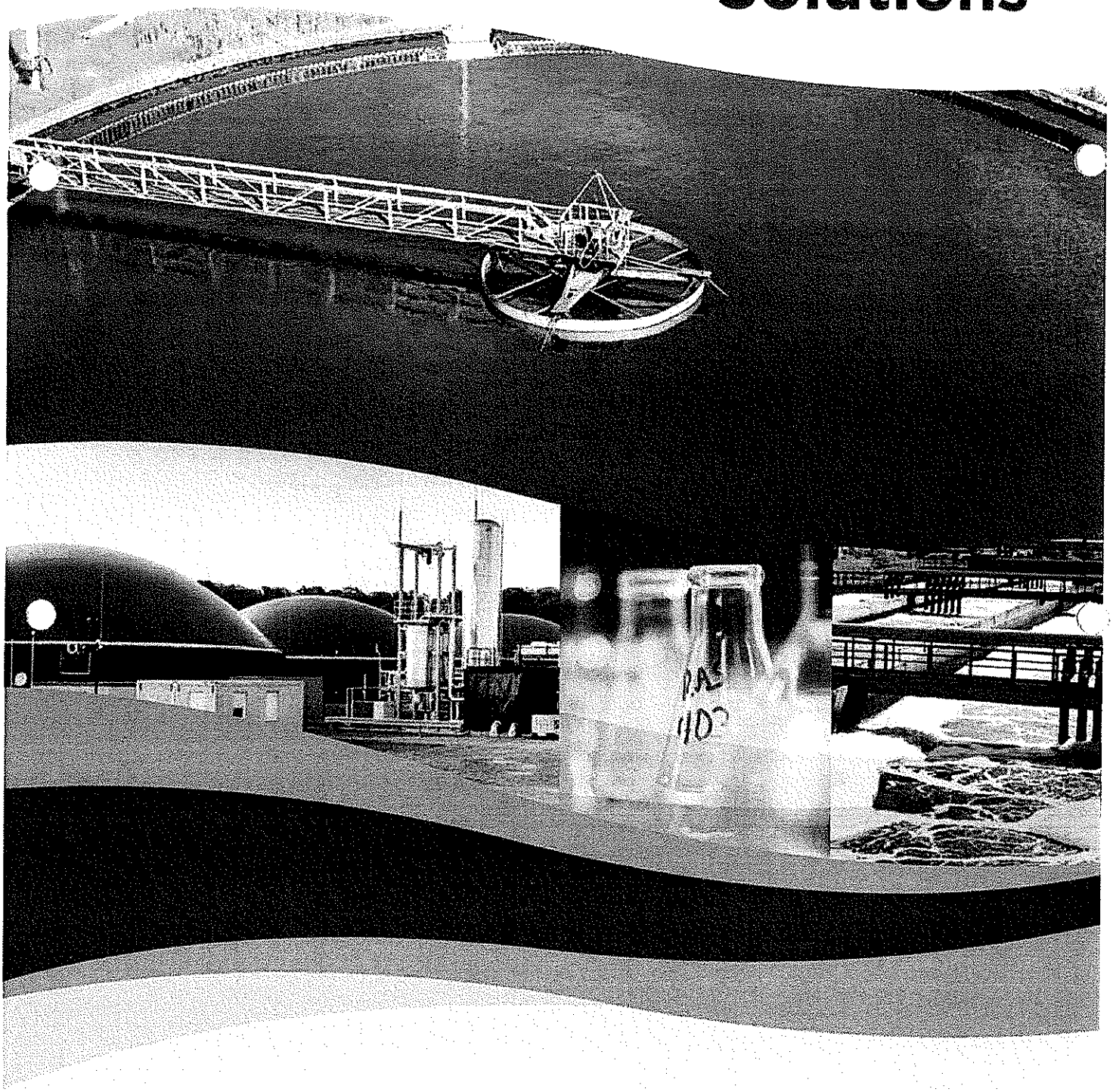

03/12/18

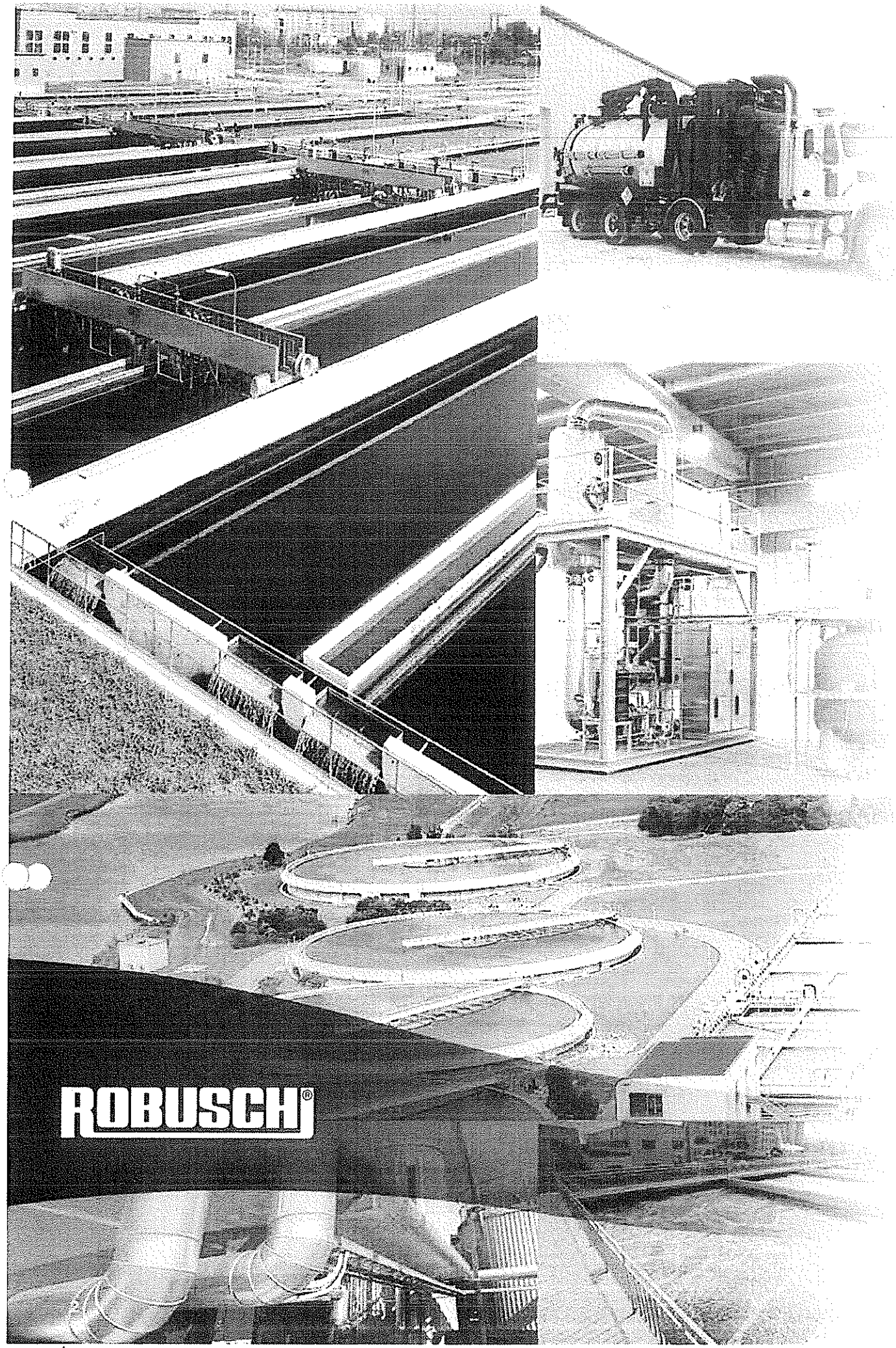

03/12/18

Wastewater Treatment
Biogas
Sewage Handling
Tertiary Treatment for Wastewater

In a competitive and evolving global market, our long history of supplying aeration equipment in wastewater treatment plants that best meets customer specific requirements, makes Robuschi a trusted and reliable partner for the environmental industry. Cost-effective solutions for new plants or refurbishments of existing installations are a major focus of our product excellence and application expertise.

Nowadays, our strategy of combining products and services extends to an ever-wider array of environmental solutions, such us -biogas, mechanical vapor recompression, sewage handling and many more.

Therefore, as a global supplier of environmental solutions, we lead the market in developing innovative technologies that support our customers in reducing life cycle costs, increasing efficiency, meeting legal requirements and, finally, improving the quality of product or services they want to provide to their own customers.

Ecological sustainability is part of the Robuschi strategy, focusing on promoting environmentally friendly solutions, enhancing energy saving and protecting natural resources.

- **Top energy efficiency**
- **Low life cycle costs**
- **Low noise operation**
- **Ease of maintenance**
- **Tailor-made offer**

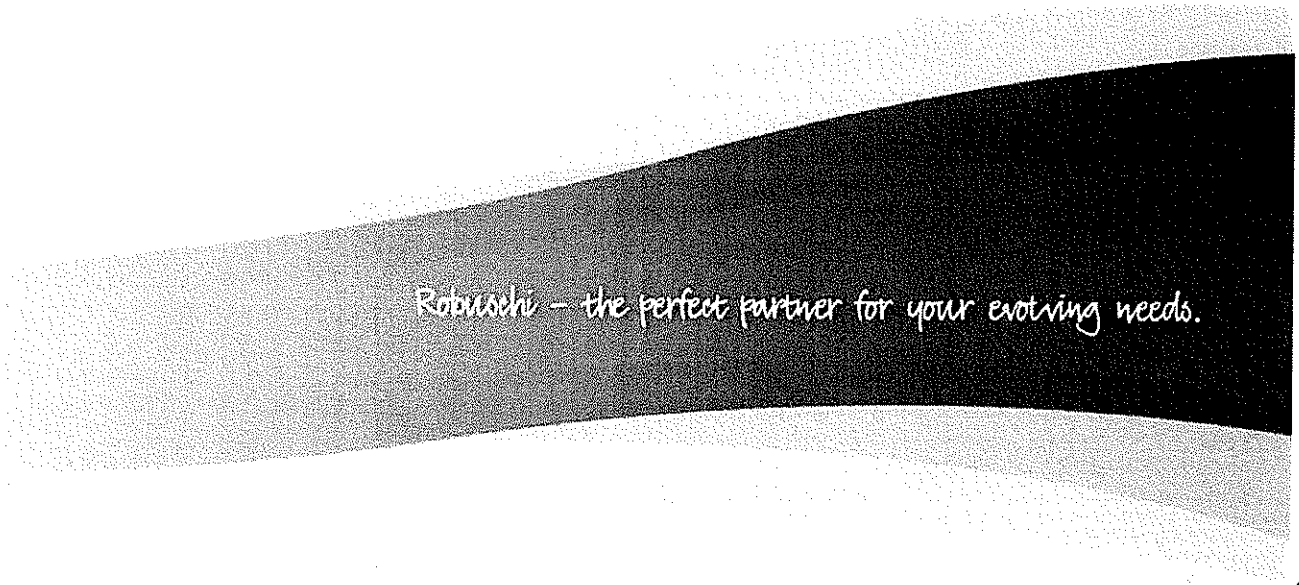

03/12/18

Environmental Specialist

- **Energy efficiency**
  In wastewater treatment plants power consumption mainly comes from aeration machines.
  Robuschi screw compressors can provide significant energy saving, depending on plant configuration.

- **Oil free**
  Environmental processes require clean and oil free air.
  Robuschi packages are totally oil free (Class 0 certification, according to ISO 8573-1).

- **Flexibility**
  More and more applications demand high turn down capability along with intermittent mode operation.
  Robuschi PD blowers and screw compressors perfectly fit this requirement.

- **Low noise**
  Low noise emission is one of the main evaluation criteria for residential areas and industrial facilities.
  All Robuschi packages have been designed for reducing the noise impact, satisfying customer requirements.

- **User and maintenance friendly**
  Thanks to its simple and robust design, all Robuschi equipment demands little maintenance during its operation and when the machines need to be serviced; every operation is easy and quick.

- **References**
  We are one of the leading suppliers of state-of-the art vacuum and pressure technology for environmental applications.
  Robuschi customers, all over the world, from municipalities to consultants, have put their trust into our engineers and products.
  We are the benchmark for the industry and will continue to work closely with our business partners around the globe.

ROBUSCHI

03/12/18

Robuschi Solutions

Wastewater Treatment

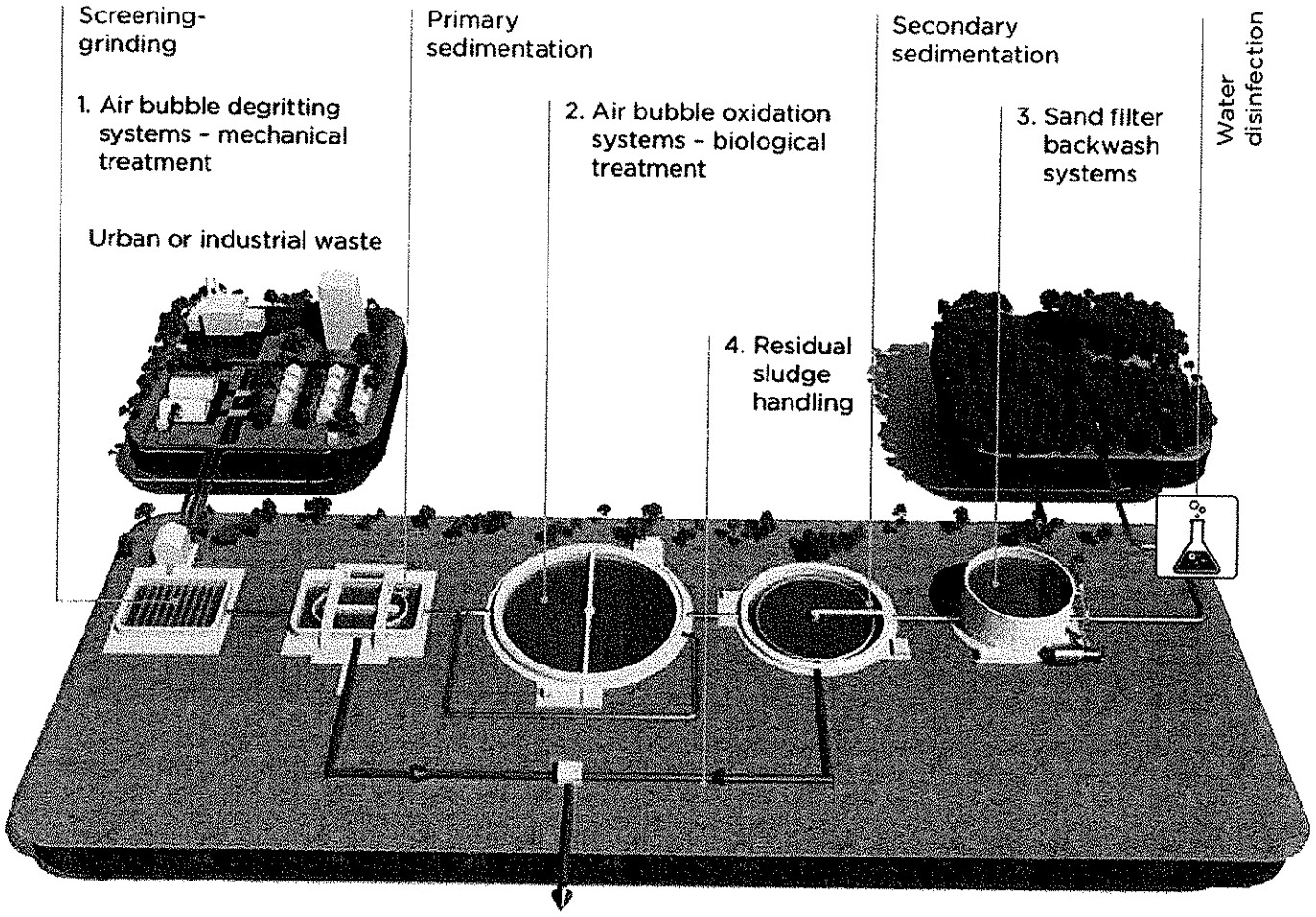

1 PD Blower
RBS - ROBOX evolution - pressure up to 1,000 mbar (g) - capacity up to to 25,000 m³/h
Screw Compressor
ROBOX screw Low pressure up to 1,000 mbar (g) - capacity up to 10,500 m³/h

2 PD Blower
RBS - ROBOX evolution - pressure up to 1,000 mbar (g) - capacity up to 25,000 m³/h
Screw Compressor
ROBOX screw Low pressure up to 1,000 mbar (g) - capacity up to 10,500 m³/h
ROBOX screw Hi pressure up to 2,500 mbar (g) - capacity up to 9,500 m³/h

3 PD Blower
RBS - ROBOX evolution - pressure up to 1,000 mbar (g) - capacity up to 10,500 m³/h
Screw Compressor
ROBOX screw Low pressure up to 1,000 mbar (g) - capacity up to 10,500 m³/h

4 Centrifugal Pump
PROMIX - UNI PN 10 - capacity up to 2,000 m³/h

03/12/18

Tertiary treatment for Wastewater

Mechanical vapor recompression

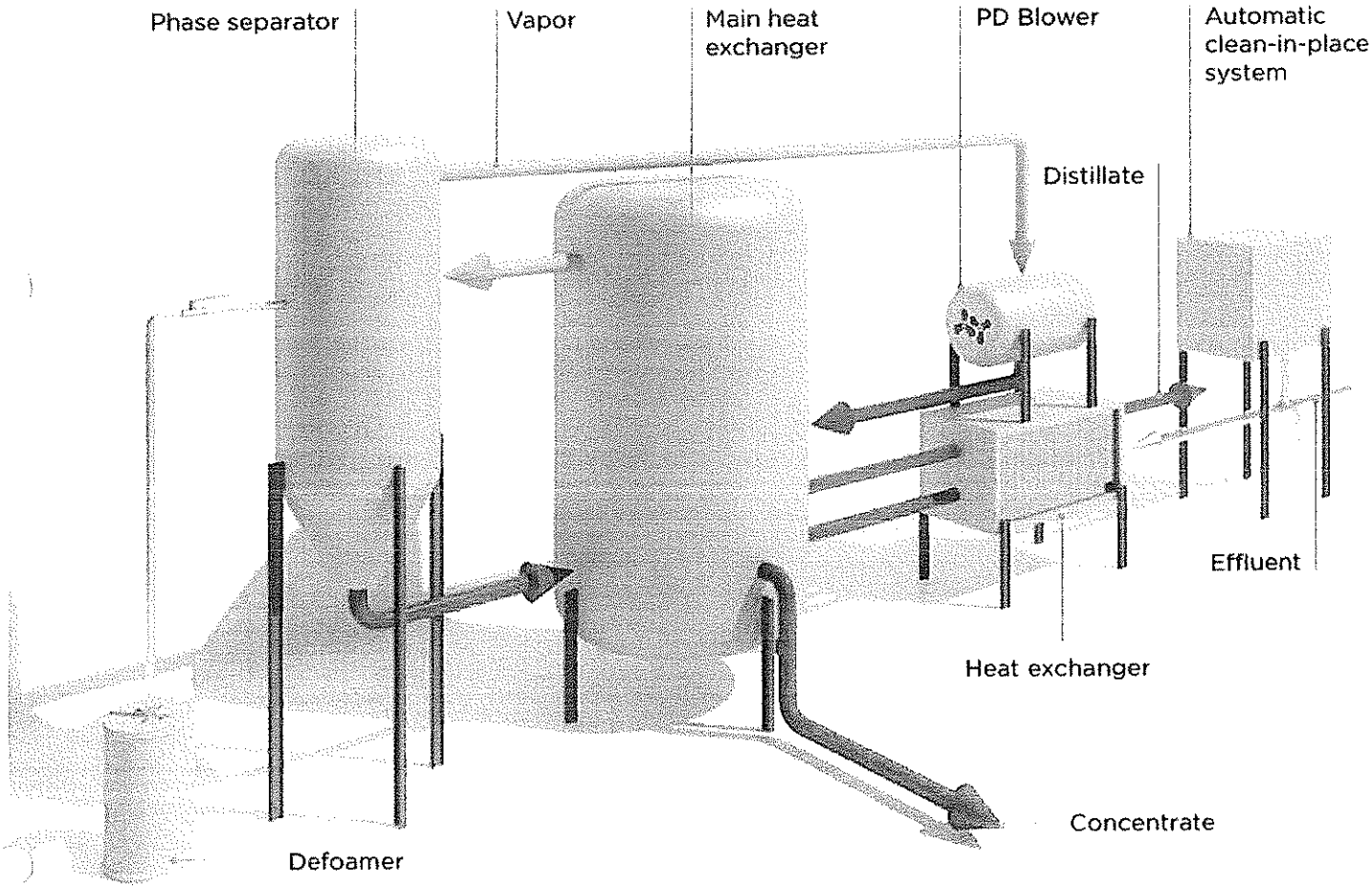

PD Blower
RBS INOX - pressure up to 1,000 mbar (g) - vacuum up to 200 mbar (a)
- capacity up to 14,000 m³/h

Tertiary treatment includes reverse osmosis, desalination and ozone processes. Robuschi PD blowers are ideally suited to respond to specific plant requirements.

ROBUSCHI

03/12/18

Robuschi Solutions

Biogas

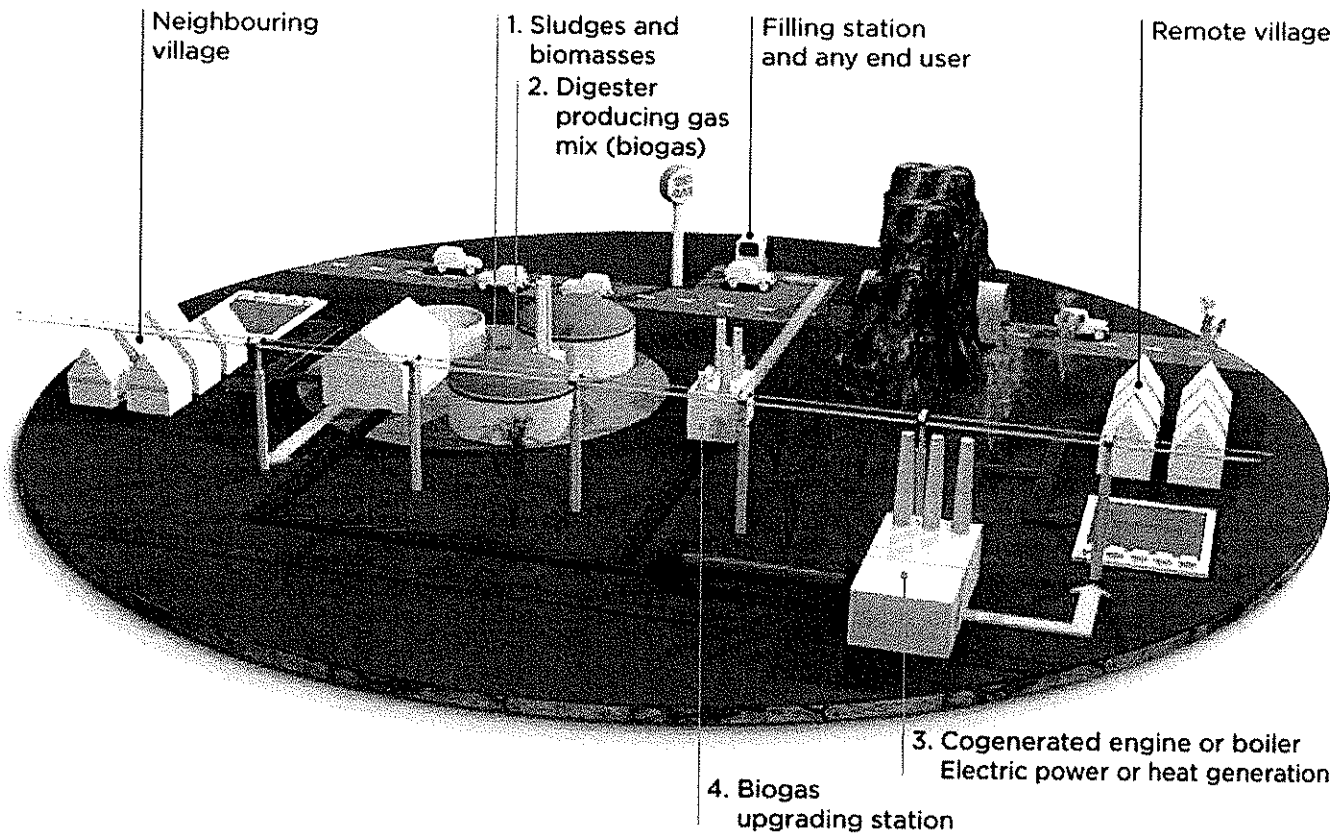

1 Centrifugal Pump
PROMIX (stainless steel execution) - UNI PN 10 - capacity up to 700 m³/h

2 Liquid Ring Compressor
RVS - pressure up to 2,000 mbar (g) - capacity up to 4,200 m³/h

3-4 PD Blower for Biogas
CRBIO - GRBIO up to 400 mbar (g) - capacity up to 3,280 m³/h
ROBOX evolution BIOGAS up to 1,000 mbar (g) - capacity up to 2,850 m³/h

ROBUSCHI

03/12/18

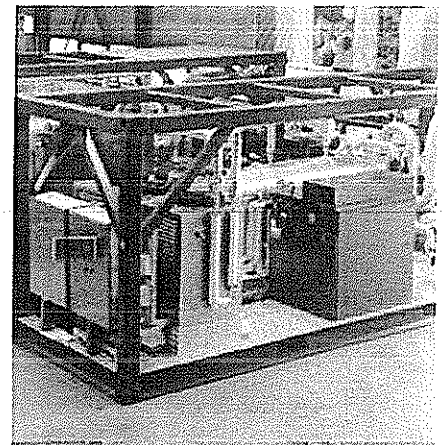

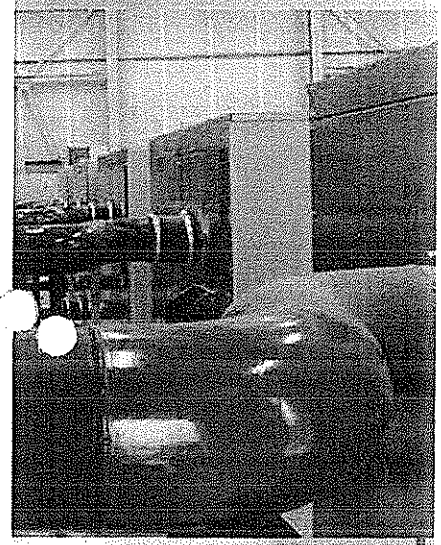

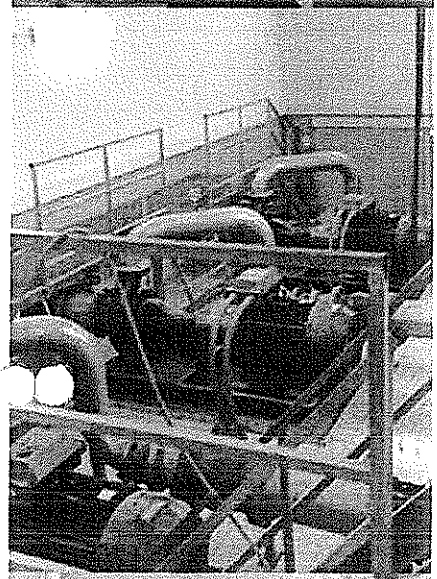

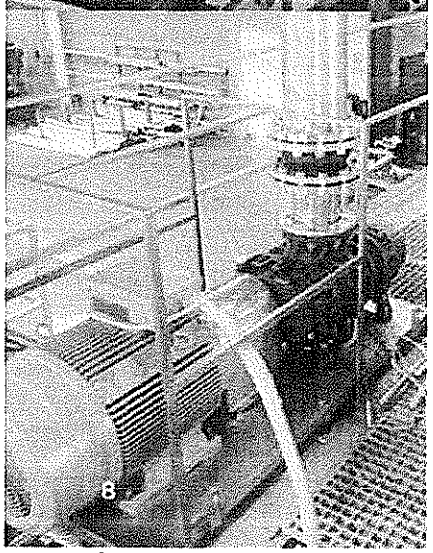

Effective Solutions for Environmental Processes

The spectrum of applications and the process complexity in the environmental industry need the choice of specific products. Thanks to its wide range of technologies, Robuschi manages to offer the most suitable one, providing a solution that combines superior efficiency, small footprint, minimum maintenance and operating costs, long service life and low noise emission.

Application	Description	Products
Primary sedimentation	In the primary sedimentation stage, sewage flows through large tanks. These tanks are used to settle sludge while the grease and oil rises to the surface and is skimmed off. Primary settling tanks are usually equipped with mechanically-driven scrapers that drive the collected sludge continually towards a hopper in the base of the tank where it is pumped to treatment facilities using PD blowers or similar technologies. As a result biological materials remain on the surface and the heavy components (mainly sand) are isolated.	**PD Blowers** **Screw Compressors**
Aeration process in wastewater treatment plants	The aeration tanks in wastewater treatment plants are activated with oxygen by using compressed air. A thorough mixing of the sludge with oxygen increases the gas yield and reduces its retention time in the tank. Even better results are achieved with warm compressed air. Blower or screw blower technologies can be found in various types of wastewater treatment plants,including aerobic activated sludge systems, SBR, nitrification-denitrification in a single basin and MBR.	**PD Blowers** **Screw Compressors**
Desalinisation	Desalinisation is the process of removing dissolved salts from seawater or brackish water. Desalting technologies can be used for many applications, most commonly to produce potable water for domestic or municipal purposes.	**PD Blowers** **Screw Compressors**

03/12/18

Application	Description	Products
Slurry liquid pumping	Using slurry pumps, tough, abrasive, viscous liquids and particles in suspension can be transferred from one tank to another of the wastewater treatment plant.	**Centrifugal Pumps**
Back washing sand Filtration	Air is used to expand the filter bed, breaking up compacted material. Clean backwash water is pumped in, suspending the loose material from where the particles are lifted through and carried away.	**PD Blowers** **Screw Compressors**
Biogas production	The biomass produced in activated sludge and clarifying tanks is stabilised in the digestion tower and used to produce biogas. A thorough mixing of the sludge increases the gas yield and reduces its retention time in the reactor. During the process, gas is withdrawn from the upper part of the digestion tower, compressed and reintroduced through the nozzles at the bottom.	**Liquid Ring Compressors** **Centrifugal Pumps**
Biogas recovery	This is the process of transfering the biogas from the digestor to the endothermic coogenerating engine or from digestors to upgrading stations.	**PD Blowers Biogas**
Slurry drying process	Farm processes install a phase-separation plant to dry slurryusing PD blowers for vapour recompression processing.	**PD Blowers**

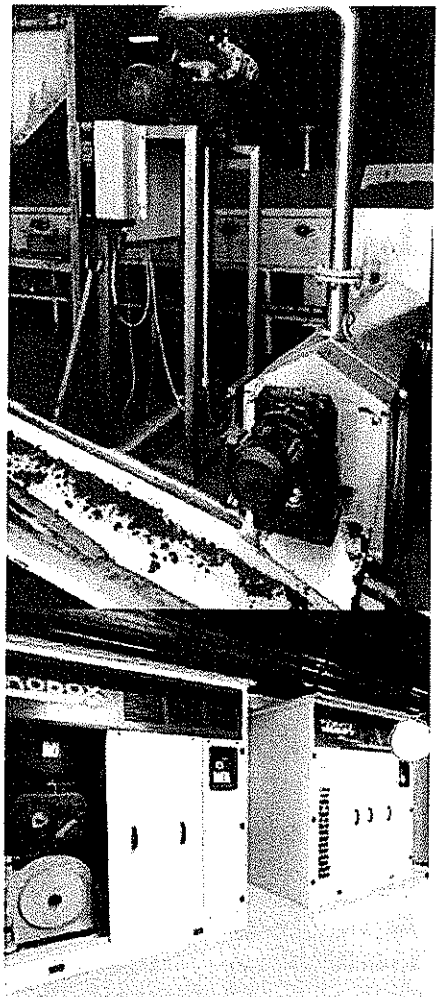

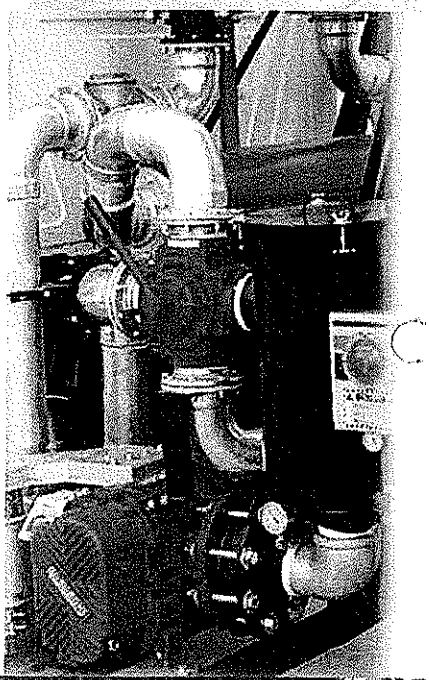

03/12/18

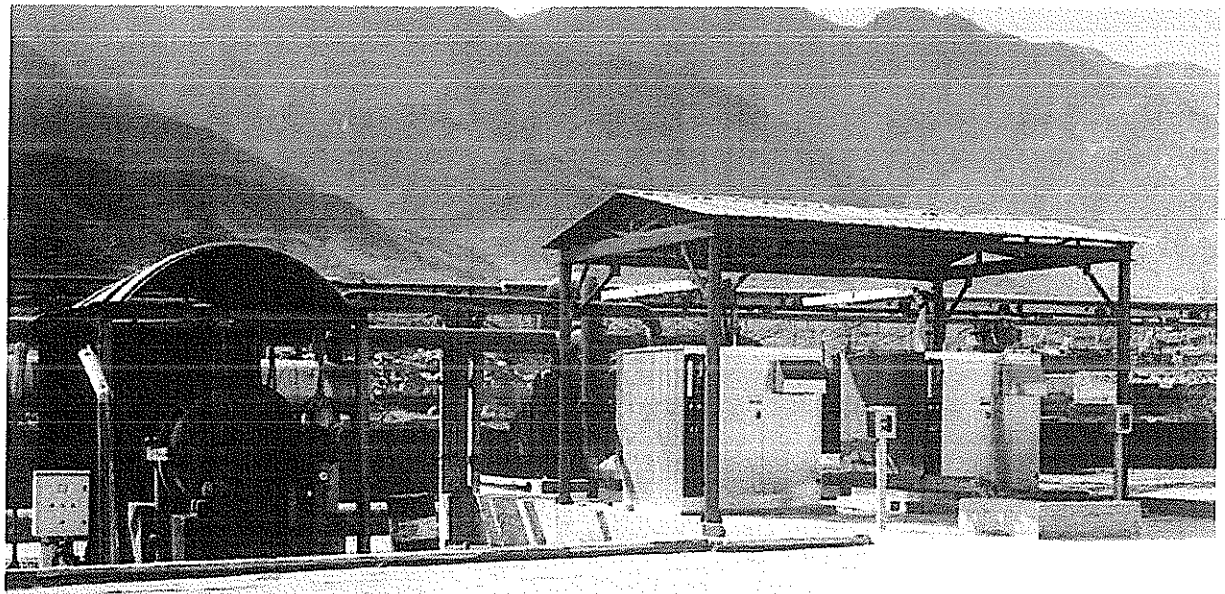

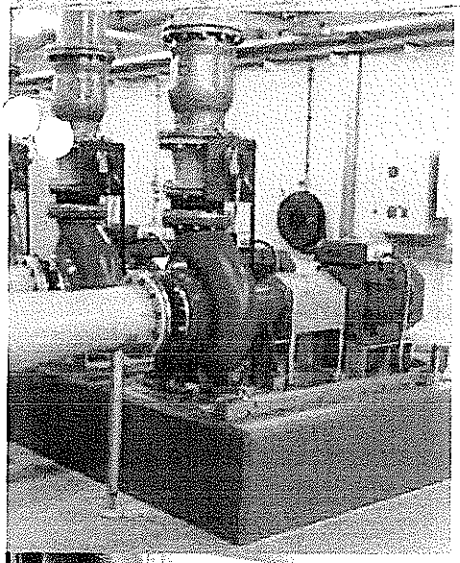

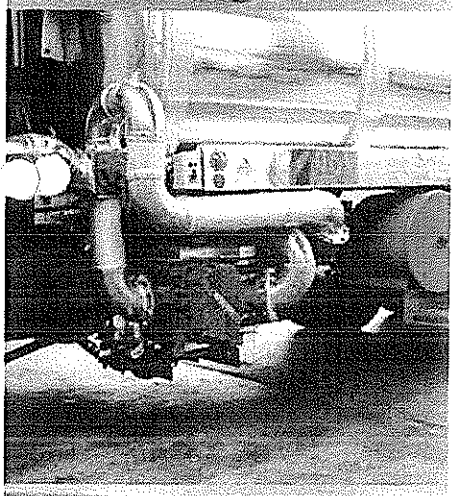

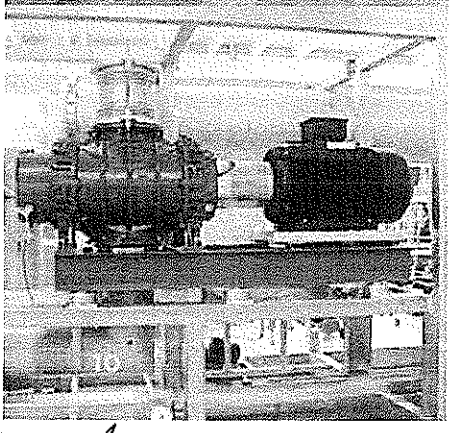

Application	Description	Products
Fish pond aeration	The water's oxygen content can be substantially increased using PD blowers, which increases the volumes of fish that can be kept in a pond. In this process, air is drawn from the atmosphere and forced through an inlet into the tube aerator. It is then diffused into the water through tiny openings and rises in fine bubbles. The oxygen in the water causes the fish to grow and multiply more rapidly, significantly increasing the yield.	**PD Blowers** **Screw Compressors**
Landfill gas recovery	The digestion of covered household waste produces landfill gas. The gas is collected and removed from the landfill, where it is compressed by gas compressors or blowers. This gas can then be used as a heating fuel, converted into electricity or used as liquefied gas.	**PD Blowers Biogas**
Soil gas extraction	This is an approved method for the reclamation of soil polluted with hydrocarbons. Depending on the volume, distribution and saturation pressure of the pollutants and the air flow through the soil, vacuum blowers are used with operating depth range between 10 - 80 m. Disposal of the extracted air must be carried out in compliance with air quality legislation.	**Vacuum Blowers**

03/12/18

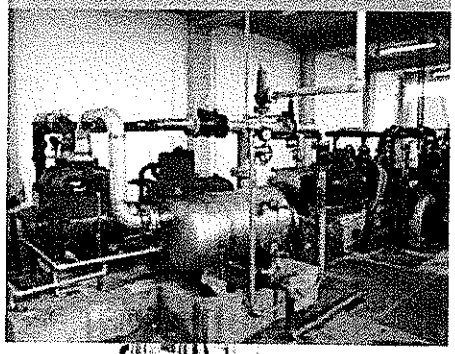

Application	Description	Products
Suction vehicles for wastewater	Vacuum pumps provide suction pressure for removing and flushing out contaminants in wastewater and for cleaning sewer networks.	**Vacuum Blowers**
Mechanical vapor compression & recompression	This process uses thermo-compression to extract water as clean condensate from polluted fluids. Because only the heavy residuals are required to be sent for further treatment, a considerable amount of water is recyclable. The distillation process acts inside an evaporator, where a PD blower is used to pressurise the vapor, in order to produce clean water condensate. Since this vapour is generally acidic and chemically aggressive, the PD blower must be encased in stainless steel and use special seals, to avoid the vapour contact the oil pumps.	**PD Blowers**
Truck-Hydroexcavation	The process uses pressurised water and an industrial-strength vacuum to excavate and evacuate soil simultaneously. After the soil is broken up, it is conveyed by vacuum, along with the water slurry to a debris tank.	**Vacuum Blowers**

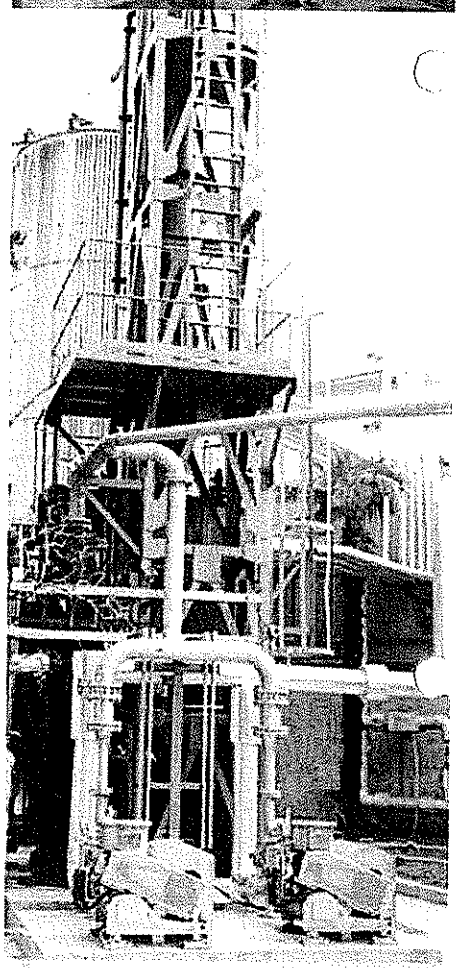

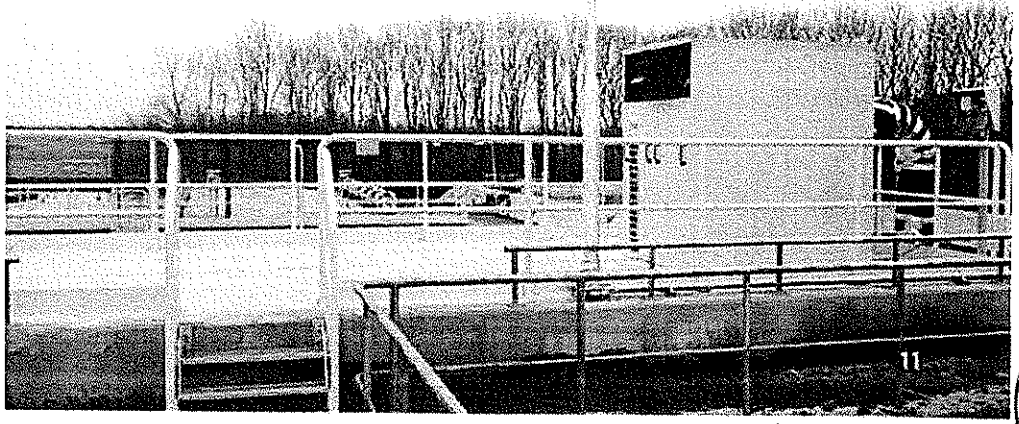

03/12/18

Product Range

PD Blowers

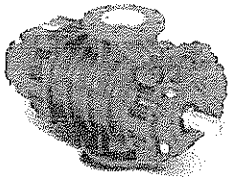

RBS is the innovative three lobe rotary positive displacement blower equipped with a special low pulse system to reduce pressure pulsations.

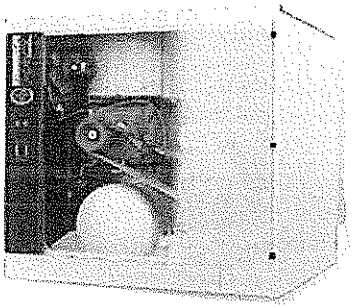

ROBOX evolution is the low pressure blower package, based on RBS series, operated by an electric motor through a special belt drive, including all accessories and noise enclosure.

- Robust
- Cost efficient
- Dry running (Class 0 certification, according to ISO 8573-1)
- Maintenance friendly

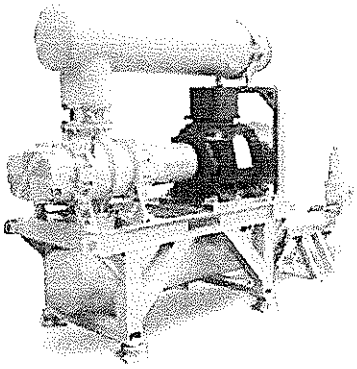

CRBS - GRBS consist of table top blower packages with RBS series and fitted with all the necessary accessories.

ROBOX evolution BIOGAS and **CRBIO - GRBIO** are blower packages, especially developed for the conveying and compression of biogas, as well as natural and landfill gases.

- Reliable
- Safe
- Resistant
- Full range of accessories
- ATEX certification
- Customised solutions for different biogas applications

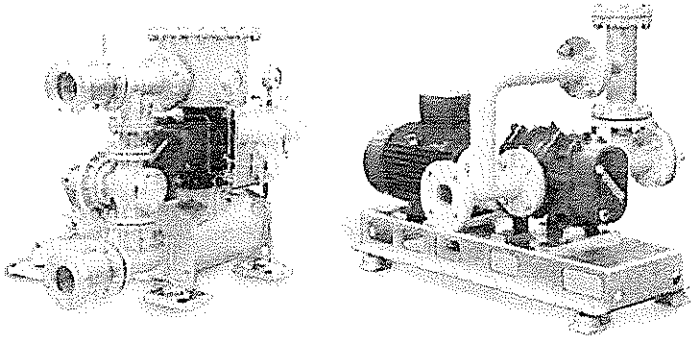

03/12/18

Product Range

PD Blowers

RBS INOX
All components in the PD blower series are constructed from stainless steel (AISI 316 or DUPLEX), to provide excellent corrosion resistance in a variety of heavy-duty applications such as wastewater treatment, ozone and evaporation processes.

- Different configurations available with various sealing systems
- Excellent resistance to corrosion
- Maintenance friendly

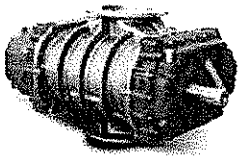

RB-DV (air injection vacuum blower) are three-lobe rotary blowers suitable to operate as dry exhausters up to 90% of vacuum.

- Patented and unique air inlet design
- Low noise
- Cool operating temperatures (not overheating on a dead head)
- Low maintenance thanks to its robustness and heavy-duty operation

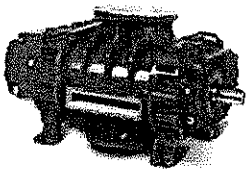

Screw Compressors

The low-pressure compressor unit, ROBOX screw, combines unique characteristics of the "oil-free" RSW screw compressor, with the consolidated characteristics of ROBOX compact units. It is available in two versions: **ROBOX SCREW Hi pressure** up to 2,500 mbar and **ROBOX SCREW Low pressure** up to 1,000 mbar.

- Efficient thanks to its unique RSW patented rotors, which reduce the number of revolutions and enhance the capacity-pressure ratio
- Low noise as a result of high-efficiency internal compression, silencers and advanced enclosure
- Simple installation
- Flexible to ensure the operation at the point of best efficiency
- Oil free for a more environmentally-friendly operation (Class 0 certification, according to ISO 8573-1)
- Ease of maintenance thanks to its simple and robust construction
- Customised with a wide range of options available

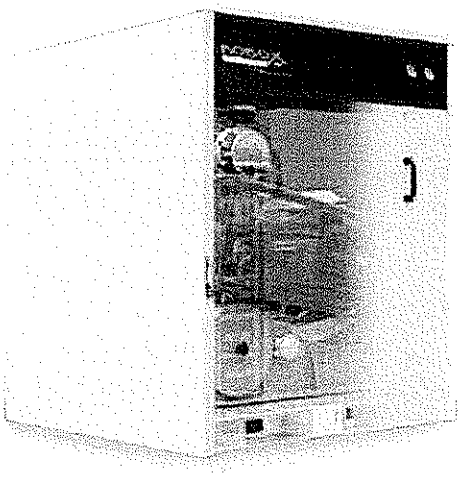

03/12/18

Product Range

Liquid Ring Vacuum Pumps and Compressors

The **RVS** series are liquid ring vacuum pumps, able to suck gas as well as vapours, achieving up to 33 mbar (a). Furthermore, the vacuum portfolio is wide-ranging with complete packages (LRVS, CRVS, KRVS) in total or partial water and oil recirculation versions. They can also be used as compressors for pressures up to 2 bar g. max.

- Reduced noise and vibrations
- Separation of service liquid from compressed gas
- No contact between cooling and service liquid (KRVS packages)
- Easy installation and maintenance

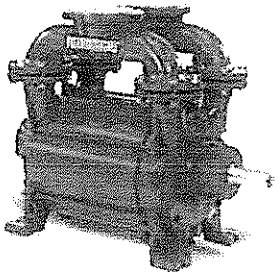

Centrifugal Pumps

The **PROMIX** family is capable of conveying any type of inert, aggressive, viscous liquid containing high percentages of suspended solid particles including sludge and the **PROCHEM** series is suitable for conveying clean or slightly murky liquids.

- Large inlet nozzle, allowing slurry suction and reducing the wear of the impeller
- Shaft protected from the conveyed liquid, preventing any corrosion event
- Stainless steel version and special models available

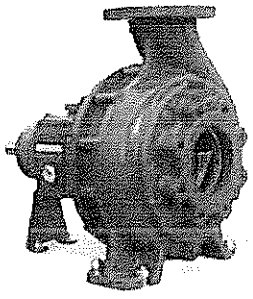

03/12/18

Performances

Pressure (mbar g)

	400	1,000	2,000	2,500
RBS				
ROBOX evolution				
CRBS - GRBS				
ROBOX evolution BIOGAS				
CRBIO - GRBIO				
RBS INOX				
ROBOX SCREW HI pressure				
ROBOX SCREW Low pressure				
RVS				
PROMIX - PROCHEM	Available in PN 10 - PN 16 compliance			

Vacuum (mbar a)

	500	200	100	33
RBS				
ROBOX evolution				
CRBS - GRBS				
RBS INOX				
RB-DV				
RVS				

Capacity (m³/h)

	800	2,600	2,850	3,280	4,200	6,000	9,500	10,500	14,000	25,000
RBS										
ROBOX evolution										
CRBS - GRBS										
ROBOX evolution BIOGAS										
CRBIO - GRBIO										
RBS INOX										
RB-DV										
ROBOX SCREW HI pressure										
ROBOX SCREW Low pressure										
RVS										
PROMIX - PROCHEM										

03/12/18

Gardner Denver

Your Ultimate Source
For Pressure and Vacuum

GARDNER DENVER
Headquarter

GARDNER DENVER S.r.l.
Divisione ROBUSCHI

Manufacturing facilities
Via S. Leonardo, 71/A
43122 Parma - Italy
Phone +39 0521 274911/91
Fax +39 0521 771242
info@robuschi.com

www.robuschi.com

GARDNER DENVER
Industrials Group

Head office
222 East Erie Street,
Milwaukee (WI) 53202
Phone +1 414-212-4700

www.gdindustrials.com

A1-1D15-C ROBUSCHI reserves the right to make any modification aimed at the continual improvement of their products.

03/12/18

PLATE MOUNTED AXIAL FLOW FANS
COMPACT Series type HCFB-HCFT (Plastic impellers) and HCBB-HCBT (Aluminium impellers)

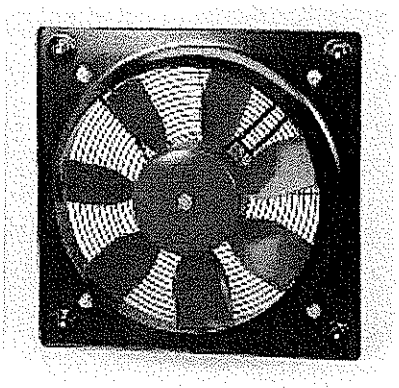

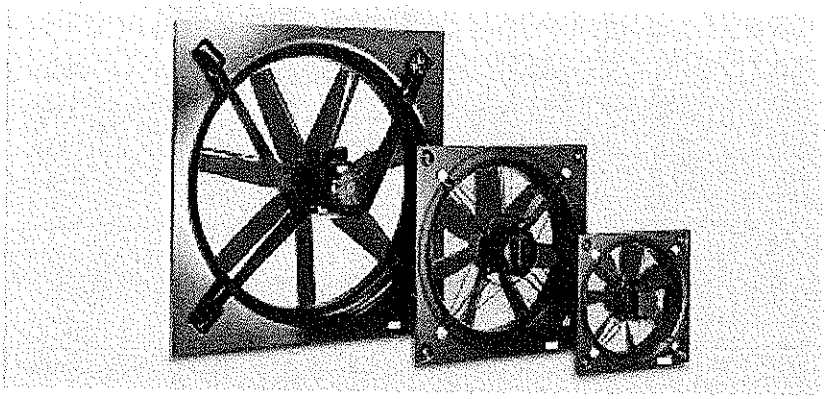

Description

The S&P Compact Plate Mounted Axial Fans feature, as the name suggests, an extremely compact design created by the combination of an internal rotor motor with factory matched direct drive wrap around impeller hub. This very low profile design optimises airflow performance whilst minimising noise generation. The Compact Plate Mounted Axial Fan series require an absolute minimum depth for any given wall, ceiling or panel mounted installation. Designed to be installed directly into walls, ceilings or panels, the Compact Plate Mounted Axial Fan series are suitable for use within a wide range of residential, commercial and industrial ventilation applications.

Applications

- General Ventilation:
  Shops , Offices, Cafes, Bars, Warehouse premises, Garages
- Agricultural Ventilation:
  For agricultural ventilation applications the Compact Plate Mounted Axial Fan series can be supplied with special high corrosion resistant constructional features. The specific application should be specified when ordering. Please see information concerning "Special Versions."
- Industrial Ventilation
  OEM equipment applications

The range

The Compact Plate Mounted Axial Fan series is available in eleven (11) standard nominal diameters from 250 to 1000mm, and depending upon the model, available with single or three phase motors in 2, 4, 6 & 8 poles.
Air volume performance ranges from 1,200 to 54,000 m^3/hr.

IP 65*

* IP55: Models 2-315, 2-355, 800 & 1000

Construction

All COMPACT Plate Mounted Axial Fans include a one piece bell mouth inlet and mounting plate manufactured from high grade galvanised steel. The motor and fan impeller are firmly supported within this mounting plate by a strong electrowelded steel support frame. All models up to and including size 710, include a steel finger proof guard as standard mounted to the inlet side of the fan. This whole assembly is protected by a two stage cataforesis primer and tough black polyester paint finish. This particular coating has been evaluated as being suitable for Outdoor Equipment usage, by Underwriters Laboratories, Inc (USA).
All models are supplied with a pre-wired wiring junction box located on the back of the motor hub for easy wiring access. This wiring junction box protects all wiring connections against the ingress of dust and moisture. IP65 Rated*.
All standard Compact Plate Mounted Axial Fans are supplied in Form (A) configuration. Airflow over Motor - Impeller.

Motors
All Compact Plate Mounted Axial fans incorporate asynchronous induction motors with a squirrel cage rotor. All motors are manufactured in accordance with UNE-113 and CEI-34-1 standards. The motor casings are constructed from die cast aluminium with integrated cooling fins and finished with a tough (black) weatherproof polyester paint.
As standard, the Compact Plate Mounted Axial fans incorporate the following motor specifications:
- IP65 (IP55 for models 2-315, 2-355, 800 & 1000).
- Class F Insulation (-40 °C to +70 °C working temperatures).
- Suitable for usage in environments up to 95% RH.
- Speed Controllable (except 2 pole models, /4-630, 710, 800 & 1000 and explosion proof versions).
- Three Phase models can be supplied to special order for use with frequency inverters speed controllers. Please enquire.
- PG-11 cable glands on terminal boxes.
- Thermal protection

Motors can be supplied suitable for the following electrical supplies:
- Single Phase 230V 50 Hz.
- Three Phase 230/400V 50 Hz.
- Three Phase 400V 50Hz.

For other special voltages and frequencies, please enquire.
All single phase motors are supplied complete with a capacitor which is located inside the wiring terminal box.

Special versions

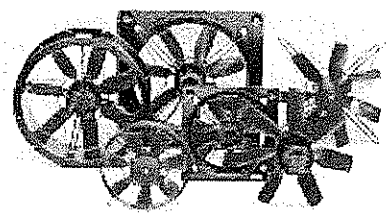

Special versions of the Compact Plate Axial Fan are available, i.e.:

- Agricultural construction.
- Deep guard for OEM applications.

Depending upon the application requirements please enquire.

Before installation, it is important to check that the product electrical characteristics listed on the data plate label (voltage, power, frequency etc), match those of the intended electrical supply.

03/12/18

Reference

H	C	F	T	/	4	-	4	0	0	/	H		A			
1	2	3	4		5		6				7		8	9		

1 - H: Compact Plate Axial Fan

2 - C: Series designation

3 - Impeller Type:

- **F:** Plastic (fibre-reinforced) Ø 250-Ø 630, single part plastic impeller and hub. Ø 710 - Ø 1000, separate plastic impeller with aluminium hub
- **G:** Plastic (fibre-reinforced) Ø 250-Ø 630,* separate plastic impeller and hub
- **B:** Die Cast Aluminium Ø 250-Ø 400, single part aluminium impeller and hub Ø 450 - Ø 1000, separate aluminium impeller with aluminium hub

4 - Electrical Connection:

B: Single Phase **T:** Three Phase

* Only in special 60Hz versions under request

5 - Number of Poles (fan speed):

- **2:** (approx. 2900 r.p.m. - 50 Hz)
- **4:** (approx. 1400 r.p.m. - 50 Hz)
- **6:** (approx. 900 r.p.m. - 50 Hz)
- **8:** (approx. 700 r.p.m. - 50 Hz)

6 - : Nominal Diameter of Fan. (mm).

7 - : Pitch Angle. H – high or L – low

8 - Direction of Air:

- **A:** Motor-Impeller (standard for plate mounted models)
- **B:** Impeller-Motor

9 - Special Construction

- **W:** With remote mounted wiring terminal box
- **M:** Without wiring terminal box
- **X:** Motor support without inlet finger guard
- **P:** Deep motor support
- **N:** Without plate
- **S:** Motor and impeller only
- **L:** Weatherproof Protected
- **C:** Condensation Protected
- **Ex:** Explosion proof versions in accordance to ATEX Directive, for three phase models:
  - Increased safety Ⓔx II2G EExeIIT3
  - Flame proof, only for models 800 and 1000
    Ⓔx II2G EExdIIBT5 or EExdIICT4
- **G:** Special corrosion treatment for agricultural applications

Supply Voltages and Frequencies

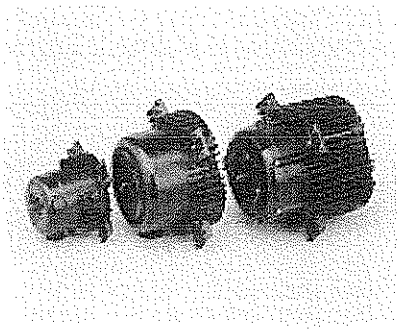

Mains supply voltage	Motor Type	Connection	Speed
SINGLE PHASE 220-240V 50Hz	230V 50Hz	-	High
THREE PHASE 220-240V 50Hz	230/400V 50Hz	△	High
		Y	Low*
THREE PHASE 380-415V 50Hz	230/400V 50Hz	Y	High
	400V 50Hz	△	High
		Y	Low*

*from sizes 450 up to 630 mm diameter.

Acoustic characteristics

The sound levels -NPS- illustrated in the tabulated performance data for the S&P COMPACT Plate Mounted Axial fans, correspond to the value of sound pressure dB(A), measured in free field conditions at a distance equivalent to three times the diameter of the impeller or a minimum of 1.5 meters whichever is the greater.
Sound power level spectrum in dB(A) at the corresponding octave band averages.

LwA ASP QMAX	63	125	250	500	1000	2000	4000	8000
2-250	50	61	68	73	74	74	67	58
2-315	51	62	82	77	85	85	79	71
2-355	58	63	87	83	89	92	86	79

LwA ASP QMAX	63	125	250	500	1000	2000	4000	8000
4-250	44	50	57	58	60	59	53	42
4-315	37	47	57	61	66	63	57	48
4-355	39	59	56	65	70	66	61	52
4-400	41	62	58	67	74	70	66	43
4-450	40	65	62	68	77	71	67	58
4-500	50	68	67	73	79	77	72	61
4-560	47	72	70	82	82	79	74	65
4-630	52	75	73	81	86	83	77	68
4-710	56	78	76	84	89	86	81	71
4-800/L	61	83	81	89	95	91	86	77
4-800/H	64	86	84	92	98	94	89	80
4-1000/L	68	90	88	96	102	98	93	84
4-1000/H	71	93	91	99	105	101	96	87

LwA ASP QMAX	63	125	250	500	1000	2000	4000	8000
6-355	39	45	46	52	53	54	48	37
6-400	34	46	49	59	60	60	53	41
6-450	35	50	52	61	64	62	56	45
6-500	39	52	55	63	67	65	59	49
6-560	41	55	60	67	71	70	64	53
6-630	43	59	62	70	71	69	67	56
6-710	51	65	68	77	80	79	73	62
6-800/L	56	70	73	82	85	84	78	67
6-800/H	58	72	75	84	87	86	80	69
6-1000/L	63	77	80	89	92	91	85	74
6-1000/H	66	80	83	92	95	94	88	77

LwA ASP QMAX	63	125	250	500	1000	2000	4000	8000
8-450	42	42	47	55	57	58	49	39
8-500	42	42	51	56	59	59	52	42
8-560	46	46	55	60	62	62	55	45
8-630	45	48	57	63	63	64	58	46
8-710	57	57	64	71	73	73	65	55
8-800/L	61	61	69	75	77	77	70	60
8-800/H	63	63	71	77	79	79	72	62
8-1000/L	68	68	76	82	84	84	77	67
8-1000/H	72	72	80	86	88	88	81	71

03/12/18

Technical characteristics with PLASTIC impellers

Type	Speed	Maximum power absorbed	Maximum current (A)		Sound pressure level	Maximum air volume	Weight	Speed* controller
	(r.p.m.)	(W)	at 230 V	at 400 V	(dB(A))	(m^3/h)	(kg)	
			SINGLE PHASE 2 POLES					
HCFB/2-250/H	2500	250	1,2	–	65	2160	5	–
			SINGLE PHASE 4 POLES					
HCFB/4-250/H	1330	60	0,3	–	52	1215	5	REB-1
HCFB/4-315/H	1300	100	0,6	–	54	2350	7	REB-1
HCFB/4-355/H	1225	200	1,0	–	58	3490	8	REB-2,5
HCFB/4-400/H	1200	340	1,6	–	60	5070	9	REB-2,5
HCFB/4-450/H	1290	480	2,3	–	65	6760	13	REB-2,5
HCFB/4-500/H	1290	650	3,0	–	68	9200	16	REB-5N
HCFB/4-560/H	1250	980	4,9	–	71	12480	22	REB-5N
HCFB/4-630/H	1200	1700	7,6	–	72	17060	25	–
			SINGLE PHASE 8 POLES					–
HCFB/6-355/H	800	90	0,5	–	50	2210	8	REB-1
HCFB/6-400/H	750	110	0,6	–	52	3400	9	REB-1
HCFB/6-450/H	835	220	1,2	–	53	4550	13	REB-2,5
HCFB/6-500/H	840	290	1,6	–	56	5820	16	REB-2,5
HCFB/6-560/H	900	420	2,4	–	59	7870	22	REB-2,5
HCFB/6-630/H	800	510	2,6	–	60	10750	25	REB-5N
HCFB/6-710/H	900	1300	5,7	–	66	17570	27	–
			SINGLE PHASE 8 POLES					
HCFB/8-450/H	625	130	0,7		46	3500	13	REB-1
HCFB/8-500/H	605	160	0,9		49	4660	16	REB-1
HCFB/8-560/H	610	240	1,3		52	5990	22	REB-2,5
HCFB/8-630/H	585	320	1,7		53	8340	25	REB-2,5
HCFB/8-710/H	625	480	2,4		59	11960	27	–
			THREE PHASE 2 POLES					
HCFT/2-250/H	2500	250	0,9	0,5	65	2160	5	–
			THREE PHASE 4 POLES					
HCFT/4-250/H	1330	60	0,3	0,2	52	1220	5	RMT-1,5
HCFT/4-315/H	1300	150	0,6	0,3	54	2350	7	RMT-1,5
HCFT/4-355/H	1260	200	0,8	0,5	58	3490	8	RMT-1,5
HCFT/4-400/H	1350	300	1,4	0,8	60	5070	9	RMT-1,5
HCFT/4-450/H	1230	500	1,7	1,0	65	6760	13	RMT-1,5
HCFT/4-500/H	1350	660	2,7	1,6	68	9200	16	RMT-3,5
HCFT/4-560/H	1320	1210	3,9	2,3	71	12480	22	RMT-3,5
HCFT/4-630/H	1420	1550	5,2	3,0	72	17060	25	–
HCFT/4-710/H	1350	2200	7,0	4,0	75	22150	27	–
HCFT/4-800/L-X (1,5kW)	1420	2300	6,6	3,8	79	24960	37	–
HCFT/4-800/H-X (3kW)	1430	4200	12,6	7,3	82	32600	52	–
HCFT/4-1000/L-X (3kW)	1400	4400	12,3	7,1	84	42000	67	–
HCFT/4-1000/H-X (5,5kW)	1460	7200	–	12,0	87	54000	95	–
			THREE PHASE 6 POLES					
HCFT/6-355/H	875	90	0,5	0,3	50	2210	8	RMT-1,5
HCFT/6-400/H	830	110	0,5	0,3	52	3400	9	RMT-1,5
HCFT/6-450/H	835	190	0,8	0,5	53	4550	13	RMT-1,5
HCFT/6-500/H	840	250	0,9	0,5	56	5820	16	RMT-1,5
HCFT/6-560/H	900	410	1,6	0,9	59	8260	22	RMT-1,5
HCFT/6-630/H	810	460	2,0	1,2	60	11000	25	RMT-1,5
HCFT/6-710/H	920	1100	4,9	2,8	66	16500	27	–
HCFT/6-800/L-X (0,55kW)	900	1180	3,9	2,2	70	19370	31	–
HCFT/6-800/H-X (0,75kW)	940	1220	4,3	2,5	72	22000	36	–
HCFT/6-1000/L-X (1,1kW)	940	1400	5,6	3,2	75	28000	54	–
HCFT/6-1000/H-X (1,5kW)	950	2330	7,6	4,4	78	36400	62	–
			THREE PHASE 8 POLES					
HCFT/8-450/H	660	130	0,7	0,4	46	3500	13	RMT-1,5
HCFT/8-500/H	625	150	0,7	0,4	49	4660	16	RMT-1,5
HCFT/8-560/H	610	230	1,0	0,6	52	5990	22	RMT-1,5
HCFT/8-630/H	635	310	1,3	0,8	53	8340	25	RMT-1,5
HCFT/8-710/H	670	450	2,0	1,2	59	11960	27	–
HCFT/8-800/L-X (0,25kW)	710	580	2,2	1,3	63	14000	63	–
HCFT/8-800/H-X (0,37kW)	690	700	3,0	1,7	65	17160	64	–
HCFT/8-1000/L-X (0,37kW)	700	720	3,0	1,7	68	20490	68	–
HCFT/8-1000/H-X (0,75kW)	725	1100	4,6	2,7	72	27040	71	–

* Three phase speed controllers (RMT) are suitable for 400 V 50 Hz electrical connection only.

03/12/18

Technical characteristics with ALUMINIUM impellers

Type	Speed	Maximum power absorbed	Maximum current absorbed (A)		Sound pressure level	Maximum air volume	Weight	Speed* controller
	(r.p.m.)	(W)	at 230 V	at 400 V	(dB(A))	(m^3/h)	(kg)	
			SINGLE PHASE 2 POLES					
HCBB/2-250/H	2500	250	1,2	-	65	2160	5	-
HCBB/2-315/H (0,37kW)	2550	730	3,6	-	75	4800	8	-
HCBB/2-355/H (0,55kW)	2500	1200	5,0	-	81	7000	9	-
			SINGLE PHASE 4 POLES					
HCBB/4-250/H	1330	60	0,3	-	52	1215	5	REB-1
HCBB/4-315/H	1300	100	0,6	-	54	2350	7	REB-1
HCBB/4-355/H	1225	200	1,0	-	58	3490	8	REB-2,5
HCBB/4-400/H	1200	340	1,6	-	60	5070	9	REB-2,5
HCBB/4-450/H	1290	480	2,3	-	65	6760	13	REB-2,5
HCBB/4-500/H	1290	650	3,0	-	68	9200	16	REB-5N
HCBB/4-560/H	1250	980	4,9	-	71	12480	22	REB-5N
HCBB/4-630/H	1200	1700	7,6	-	72	17060	25	-
			SINGLE PHASE 6 POLES					-
HCBB/6-355/H	800	90	0,5	-	50	2210	8	REB-1
HCBB/6-400/H	750	110	0,6	-	52	3400	9	REB-1
HCBB/6-450/H	835	220	1,2	-	53	4550	13	REB-2,5
HCBB/6-500/H	840	290	1,6	-	56	5820	16	REB-2,5
HCBB/6-560/H	900	420	2,4	-	59	7870	22	REB-2,5
HCBB/6-630/H	800	510	2,6	-	60	10750	25	REB-5N
HCBB/6-710/H	900	1300	5,7	-	66	17570	27	-
			SINGLE PHASE 8 POLES					
HCBB/8-450/H	625	130	0,7		46	3500	13	REB-1
HCBB/8-500/H	605	160	0,9		49	4660	16	REB-1
HCBB/8-560/H	610	240	1,3		52	5990	22	REB-2,5
HCBB/8-630/H	585	320	1,7		53	8340	25	REB-2,5
HCBB/8-710/H	625	480	2,4		59	11960	27	-
			THREE PHASE 2 POLES					
HCBT/2-250/H	2500	250	0,9	0,5	65	2160	5	-
HCBT/2-315/H (0,37kW)	2750	750	2,1	1,2	75	4800	8	-
HCBT/2-355/H (0,55kW)	2700	1200	3,3	1,9	81	7000	9	-
			THREE PHASE 4 POLES					
HCBT/4-250/H	1330	60	0,3	0,2	52	1220	5	RMT-1,5
HCBT/4-315/H	1300	150	0,6	0,3	54	2350	7	RMT-1,5
HCBT/4-355/H	1260	200	0,8	0,5	58	3490	8	RMT-1,5
HCBT/4-400/H	1350	300	1,4	0,8	60	5070	9	RMT-1,5
HCBT/4-450/H	1230	500	1,7	1,0	65	6760	13	RMT-1,5
HCBT/4-500/H	1350	660	2,7	1,6	68	9200	16	RMT-3,5
HCBT/4-560/H	1320	1210	3,9	2,3	71	12480	22	RMT-3,5
HCBT/4-630/H	1420	1550	5,2	3,0	72	17060	25	-
HCBT/4-710/H	1350	2200	7,0	4,0	75	22150	27	-
HCBT/4-800/L-X (1,5kW)	1420	2300	6,6	3,8	79	24960	37	-
HCBT/4-800/H-X (3kW)	1430	4200	12,6	7,3	82	32600	52	-
HCBT/4-1000/L-X (3kW)	1400	4400	12,3	7,1	84	42000	67	-
HCBT/4-1000/H-X (5,5kW)	1460	7200	-	12,0	87	54000	95	-
			THREE PHASE 6 POLES					
HCBT/6-355/H	875	90	0,5	0,3	50	2210	8	RMT-1,5
HCBT/6-400/H	830	110	0,5	0,3	52	3400	9	RMT-1,5
HCBT/6-450/H	835	190	0,8	0,5	53	4550	13	RMT-1,5
HCBT/6-500/H	840	250	0,9	0,5	56	5820	16	RMT-1,5
HCBT/6-560/H	900	410	1,6	0,9	59	8260	22	RMT-1,5
HCBT/6-630/H	810	460	2,0	1,2	60	11000	25	RMT-1,5
HCBT/6-710/H	920	1100	4,9	2,8	66	16500	27	-
HCBT/6-800/L-X (0,55kW)	900	1180	3,9	2,2	70	19370	31	-
HCBT/6-800/H-X (0,75kW)	940	1220	4,3	2,5	72	22000	36	-
HCBT/6-1000/L-X (1,1kW)	940	1400	5,6	3,2	75	28000	54	-
HCBT/6-1000/H-X (1,5kW)	950	2330	7,6	4,4	78	36400	62	-
			THREE PHASE 8 POLES					
HCBT/8-450/H	660	130	0,7	0,4	46	3500	13	RMT-1,5
HCBT/8-500/H	625	150	0,7	0,4	49	4660	16	RMT-1,5
HCBT/8-560/H	610	230	1,0	0,6	52	5990	22	RMT-1,5
HCBT/8-630/H	635	310	1,3	0,8	53	8340	25	RMT-1,5
HCBT/8-710/H	670	450	2,0	1,2	59	11960	27	-
HCBT/8-800/L-X (0,25kW)	710	580	2,2	1,3	63	14000	63	-
HCBT/8-800/H-X (0,37kW)	690	700	3,0	1,7	65	17160	64	-
HCBT/8-1000/L-X (0,37kW)	700	720	3,0	1,7	68	20490	68	-
HCBT/8-1000/H-X (0,75kW)	725	1100	4,6	2,7	72	27040	71	-

* Three phase speed controllers (RMT) are suitable for 400 V 50 Hz electrical connection only.

03/12/18

Installation

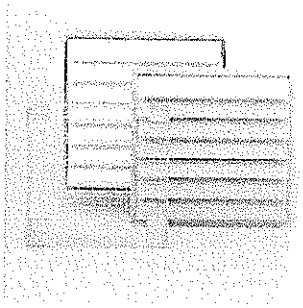

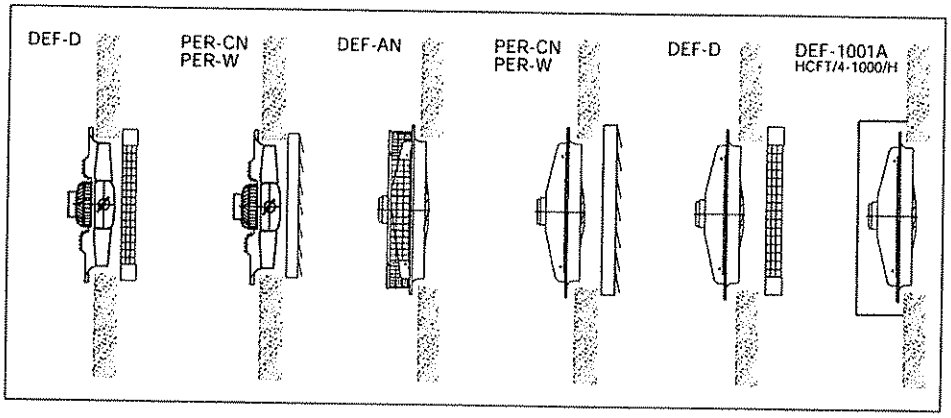

Compact model Type	Wire Protection Guards		Exhaust Side Louvre Shutters	
	Outlet	Inlet	Plastic	Aluminium
HCFB / HCFT 250	DEF-250 D	-	PER-250 W	PER-250 CN
HCFB / HCFT 315	DEF-325 D	-	PER-355 W	PER-355 CN
HCFB / HCFT 355	DEF-375 D	-	PER-355 W	PER-355 CN
HCFB / HCFT 400	DEF-450 D	-	PER-400 W	PER-400 CN
HCFB / HCFT 450	DEF-450 D	-	PER-450 W	PER-450 CN
HCFB / HCFT 500	DEF-525 D	-	PER-500 W	PER-500 CN
HCFB / HCFT 560	DEF-630 D	-	PER-560 W	PER-630 CN
HCFB / HCFT 630	DEF-630 D	-	PER-630 W	PER-630 CN
HCFB / HCFT 710	DEF-800 D	-	PER-710 W	PER-710 CN
HCFT 800	DEF-800 D	DEF- 800 AN	PER-800 W	PER-800 CN
HCFT 1000	DEF-1000 D	DEF-1000 AN	PER-1000 W	PER-1000 CN
HCFT / 4-1000 / H	DEF-1000 D	DEF-1001 A	PER-1000 W	PER-1000 CN

Electrical accessories

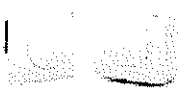

REB
Electronic, single phase speed controller.
See accessories pages for further details.

RMB/RMT
Auto transformer, single and three phase speed controller.
See accessories pages for further details.

03/12/18

Dimensions (mm)

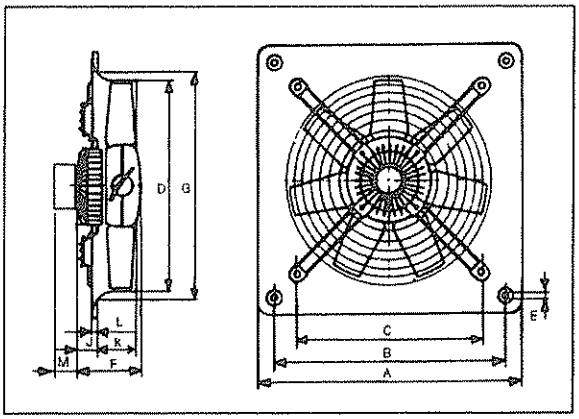

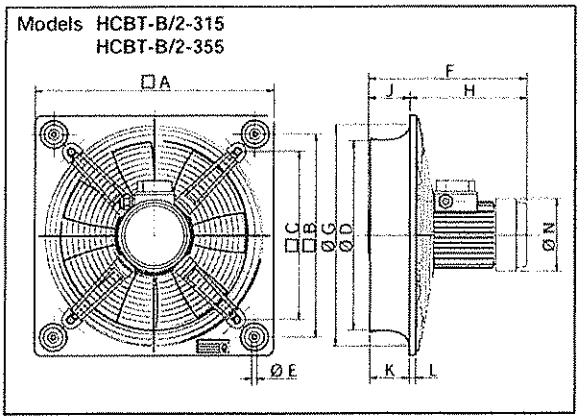

Type	⧄ A	⧄ B	⧄ C	Ø D	Ø E	F Number of Poles /2	F /4	F /6	F /8	Ø G	J Number of Poles /2	J /4	J /6	J /8	K	L	M 3 Ph	M 1 Ph
250	315	260	220	254	10	122	122			294	59	59			53	12	40	65
315	400	330	280	315	10		122			329		32			68	12	40	65
355	450	380	315	355	10		129	129		371		45	45		75	12	40	65
400	500	420	355	400	10		129	129		422		40,5	40,5		78	12	40	65
450	560	480	400	450	10		150	150	150	476		48	48	48	91	12	40	65
500	630	560	450	500	10		150	150	150	536		44,5	44,5	44,5	97	12	40	65
560	710	630	510	560	10		218,5	150	150	596		110,5	42	42	98,5	12	40	65
630	800	710	580	630	12		218,5	150	150	674		110,5	41	41	103	12	40	65
710	900	800	636	710	12		218,5	218,5	218,5	733		134	134	134	91,5	16,5	40	65

Type	⧄ A	⧄ B	⧄ C	Ø D	Ø E	F	Ø G	H	J	K	L	Ø N
HCBT-B/2-315	400	330	280	315	10	298	329	220,5	77,5	68	12	135
HCBT-B/2-355	450	380	315	355	10	298	371	219	79	75	12	135

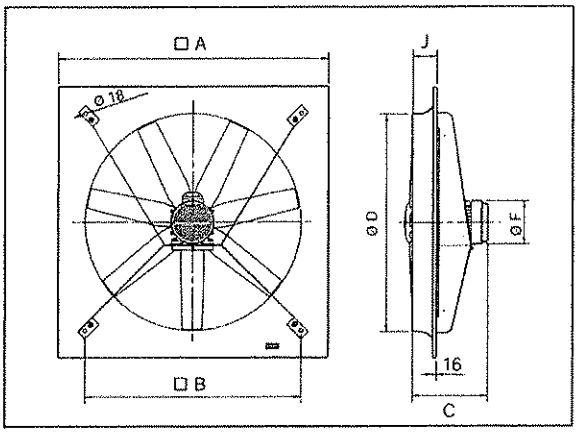

Type	⧄ A	⧄ B	Ø D	J	E	Ø G	C /4 L	C /4 H	C /6 L	C /6 H	C /8 L	C /8 H	Ø F /4 L	Ø F /4 H	Ø F /6 L	Ø F /6 H	Ø F /8 L	Ø F /8 H
HCBT-800	1000	800	800	92	189	926	345	380	310	345	310	345	181	203	162	181	162	181
HCBT-1000	1250	1000	1000	110	174	1154	380	-	345	380	345	380	203	-	181	203	181	203

03/12/18

Performance curves - HCFB/HCFT - HCBB/HCBT

- Q = Air volume in, m^3/hr and m^3/s
- Pe = Static pressure in mmWG and Pa.
- Dry air at 20 °C and 760 mmHg.
- Air flow data in accordance with the following standards: UNE 100-212-89, BS 848, Part 1, AMCA 210-85 and ASHRAE 51-1985.

Typical fan selection:

Do not select an airflow performance in the area of the graph left of the dashed line (as shown to the right - coloured area).
To find the working point of the fan at a required volume, it is first necessary to plot a system resistance curve. The working point of the fan lies at the intersection of the system resistance curve and that of the fan performance curve - as illustrated to the right.

Example: Required air volume 10,000 m^3/h at 3 mmWG.
Fan working point 11,300 m^3/h at 4 mmWG.

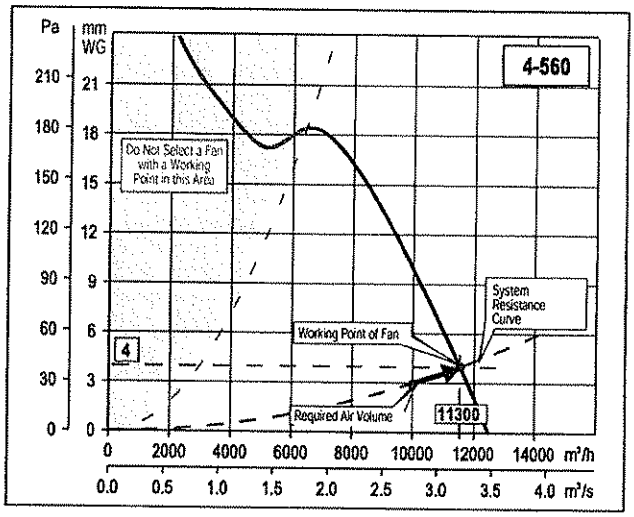

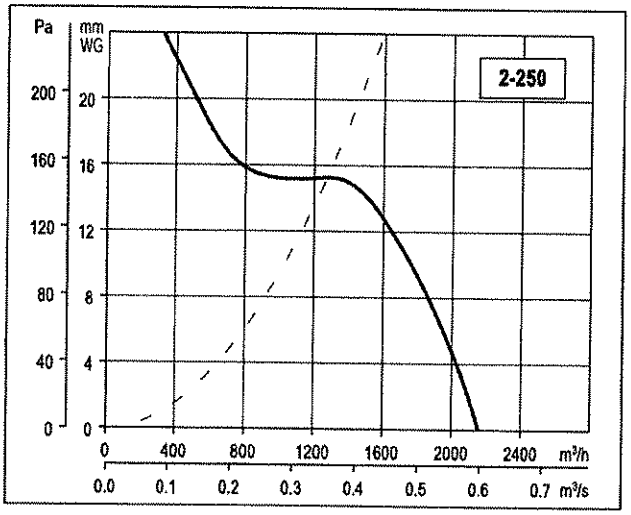

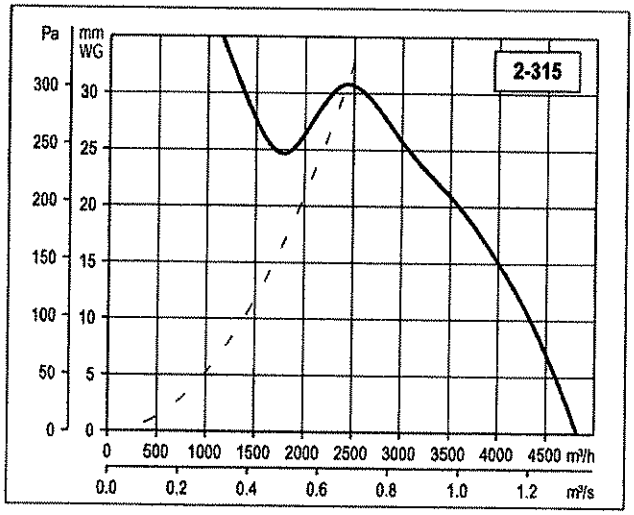

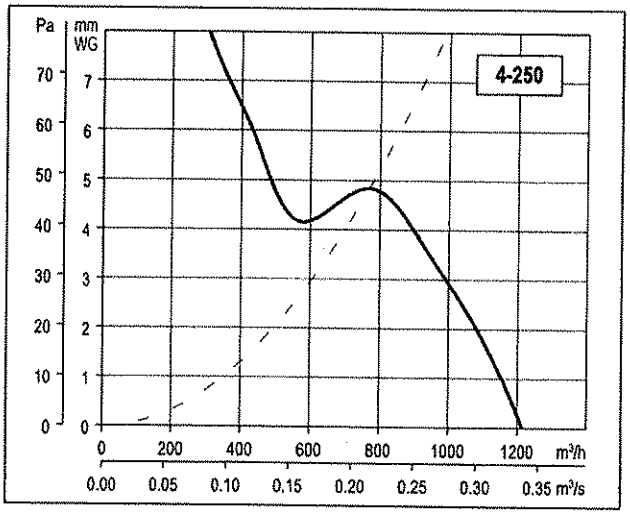

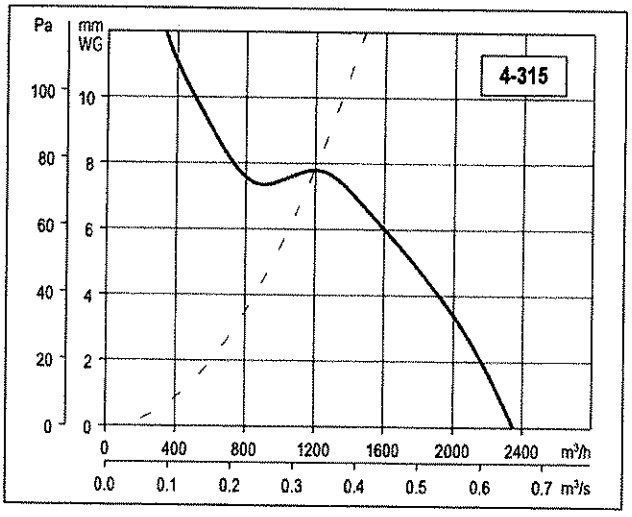

03/12/18

Performance curves - HCFB/HCFT - HCBB/HCBT

- Q = Air volume in, m^3/hr and m^3/s
- Pe = Static pressure in mmWG and Pa.
- Dry air at 20 °C and 760 mmHg.
- Air flow data in accordance with the following standards: UNE 100-212-89, BS 848, Part 1, AMCA 210-85 and ASHRAE 51-1985.

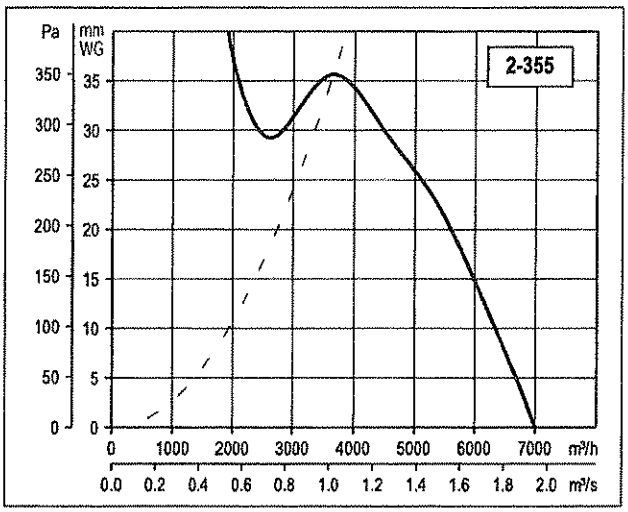

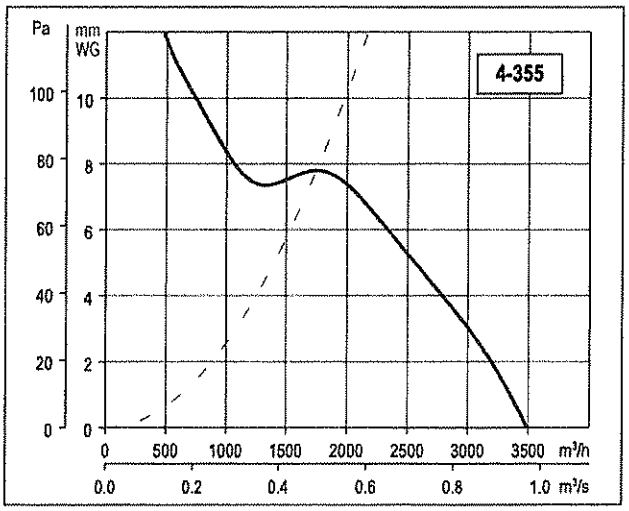

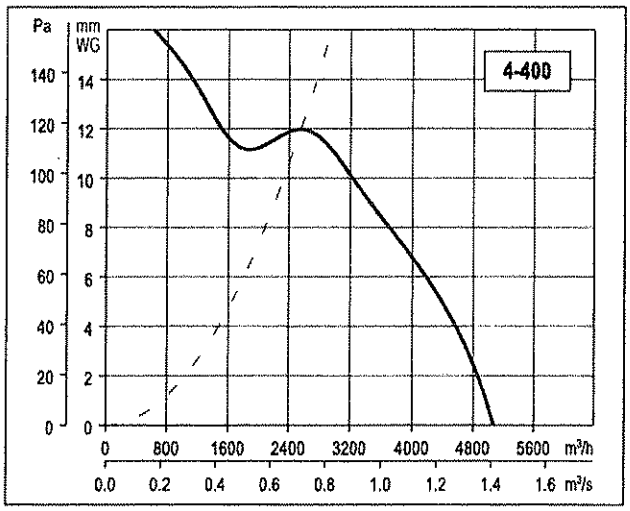

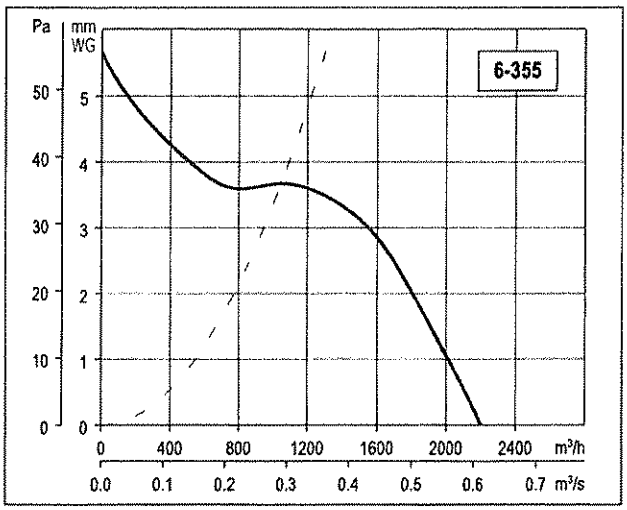

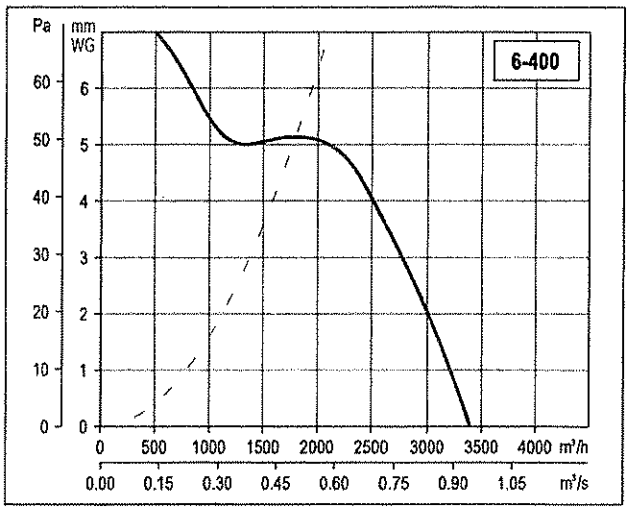

03/12/18

Performance curves - HCFB/HCFT - HCBB/HCBT

- Q = Air volume in, m^3/hr and m^3/s
- Pe = Static pressure in mmWG and Pa.
- Dry air at 20 °C and 760 mmHg.
- Air flow data in accordance with the following standards: UNE 100-212-89, BS 848, Part 1, AMCA 210-85 and ASHRAE 51-1985.

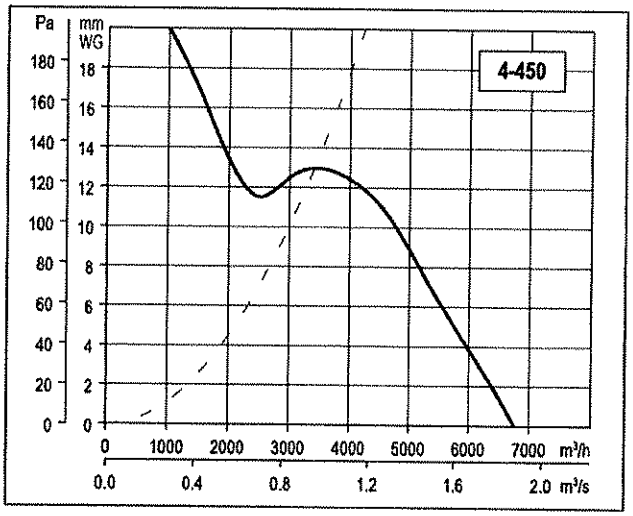

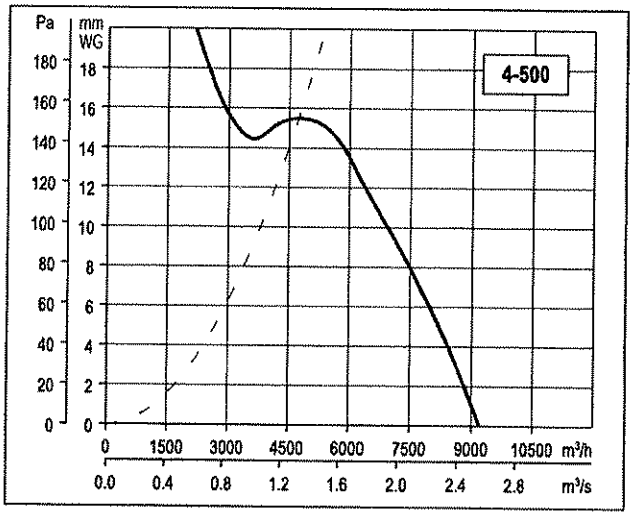

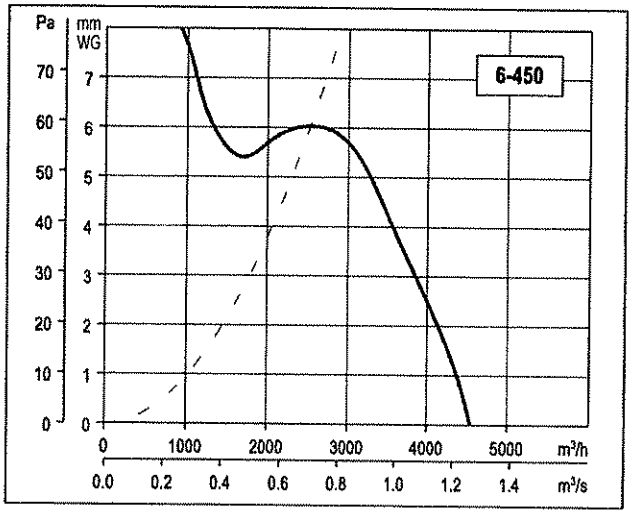

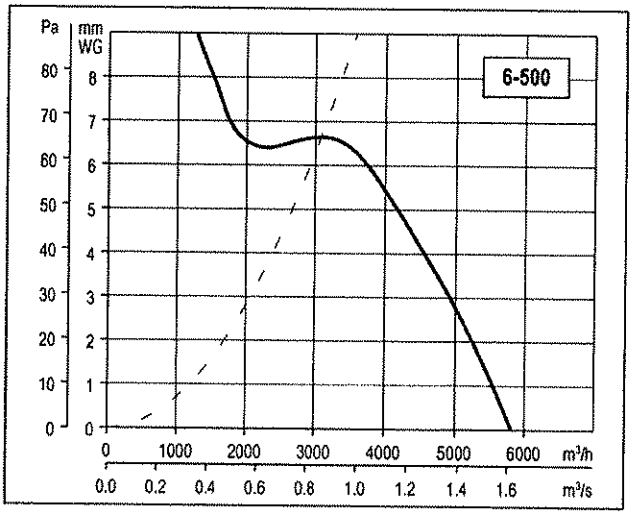

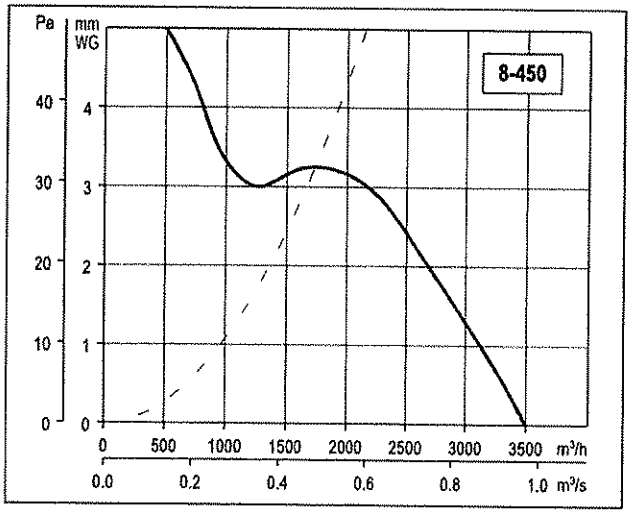

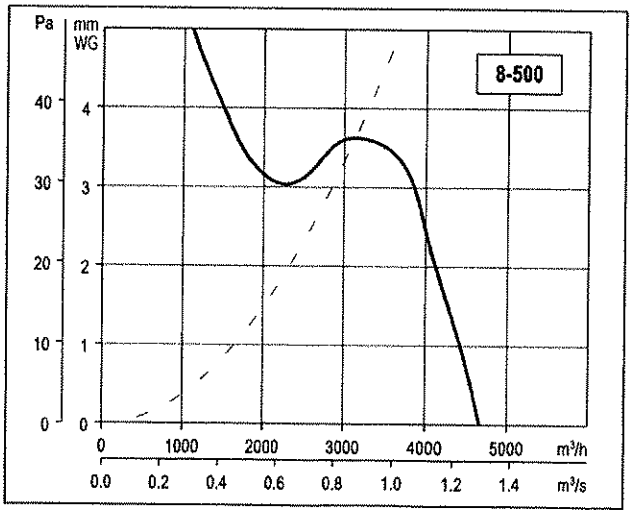

03/12/18

Performance curves - HCFB/HCFT - HCBB/HCBT

- Q = Air volume in, m^3/hr and m^3/s
- Pe = Static pressure in mmWG and Pa.
- Dry air at 20 °C and 760 mmHg.
- Air flow data in accordance with the following standards: UNE 100-212-89, BS 848, Part 1, AMCA 210-85 and ASHRAE 51-1985.

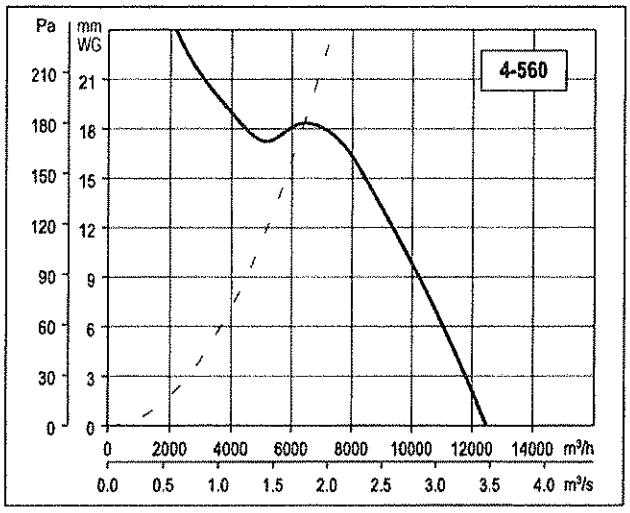

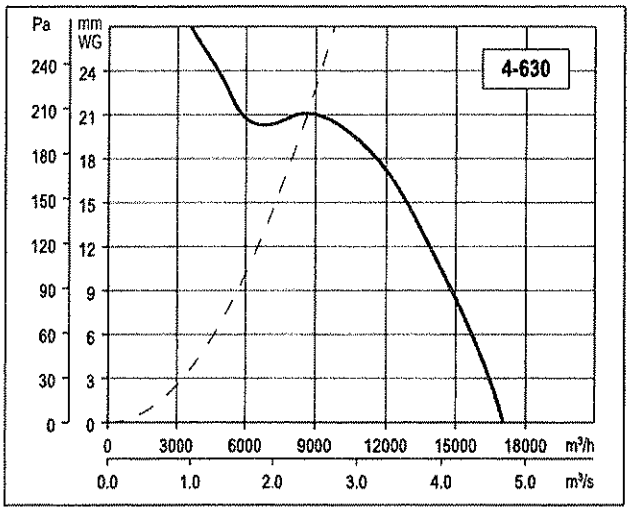

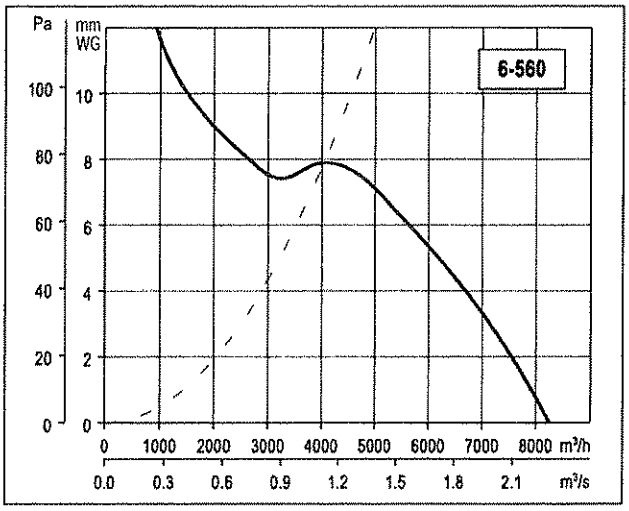

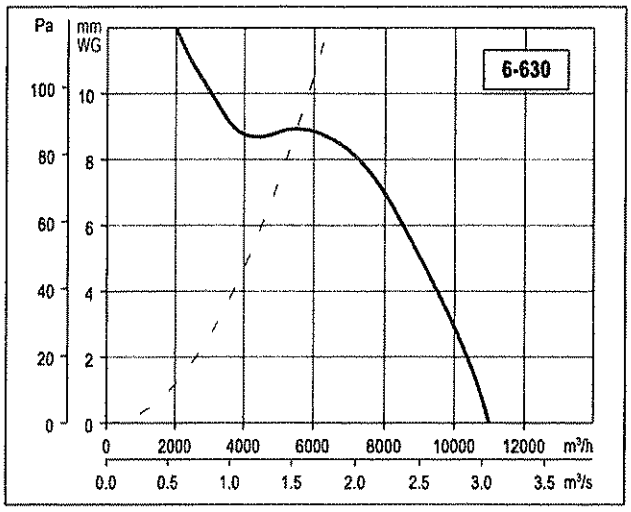

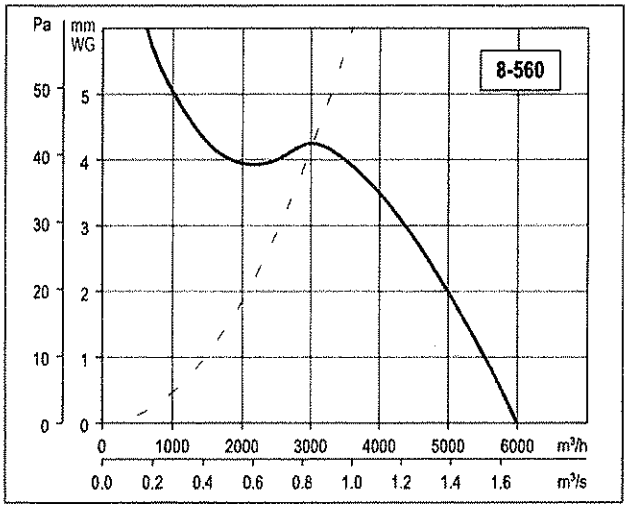

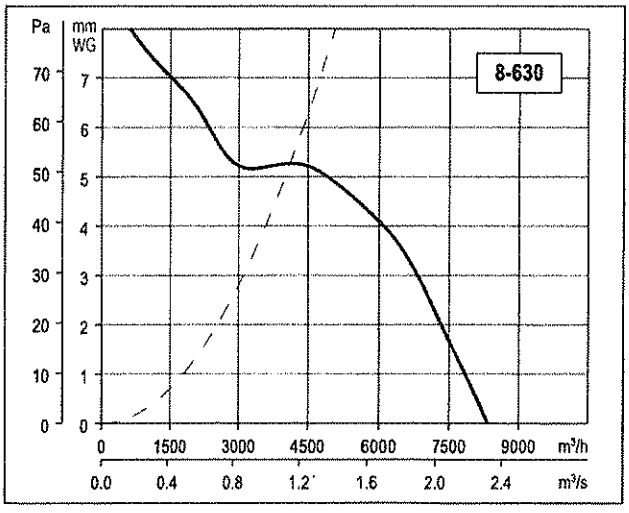

03/12/18

Performance curves - HCFB/HCFT - HCBB/HCBT

- Q = Air volume in, m^3/hr and m^3/s
- Pe = Static pressure in mmWG and Pa.
- Dry air at 20 °C and 760 mmHg.
- Air flow data in accordance with the following standards: UNE 100-212-89, BS 848, Part 1, AMCA 210-85 and ASHRAE 51-1985.

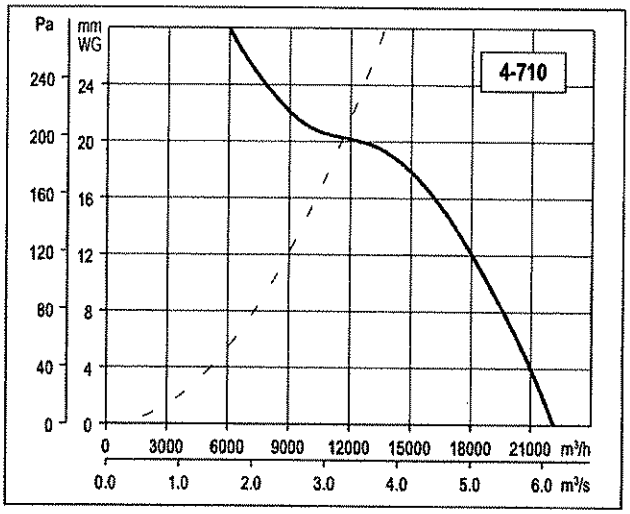

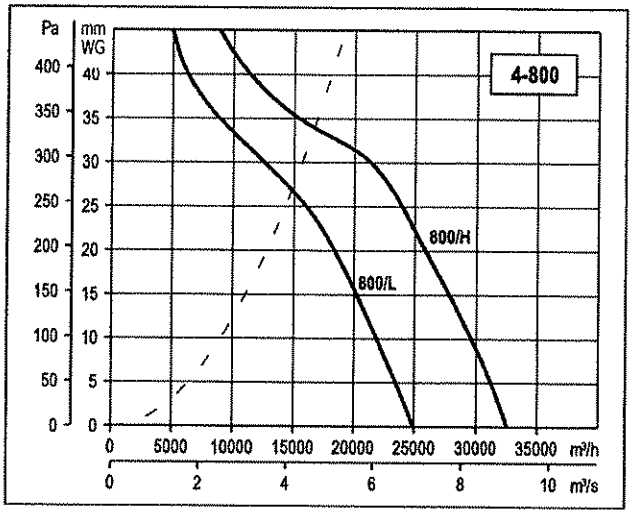

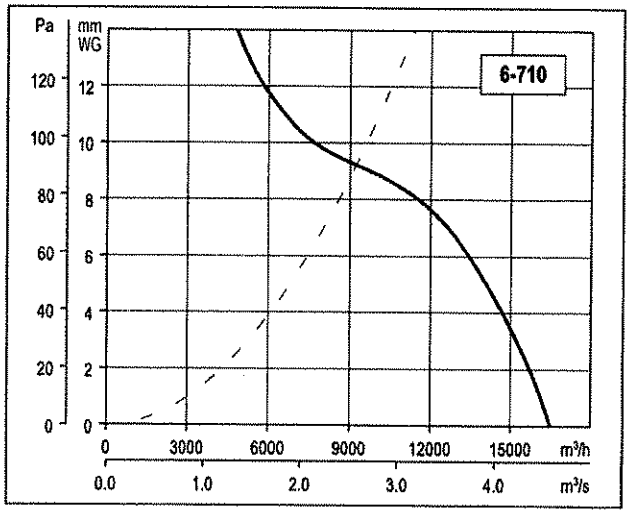

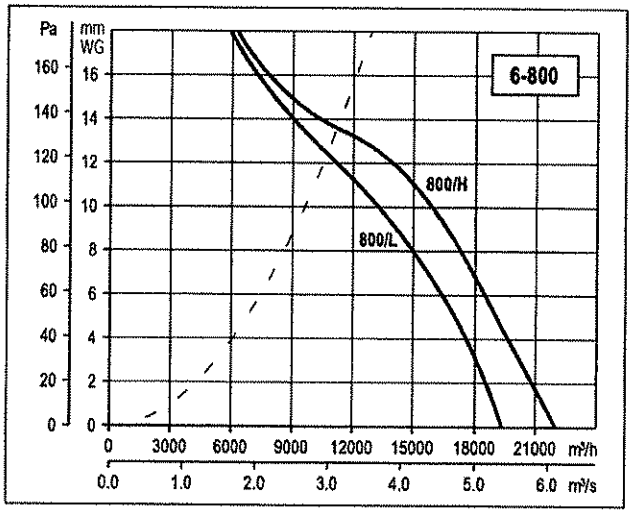

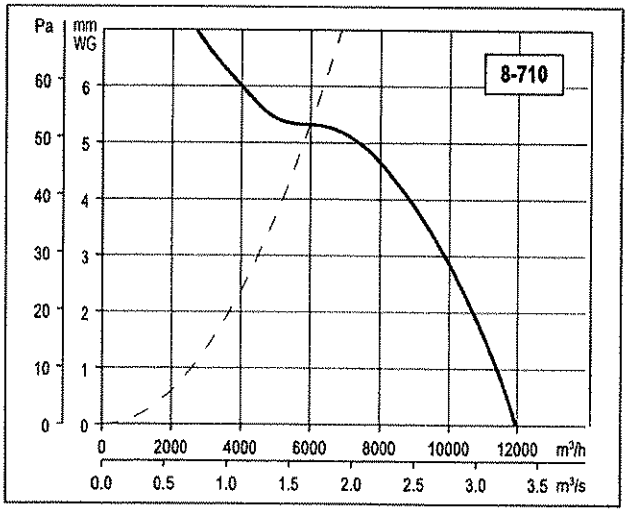

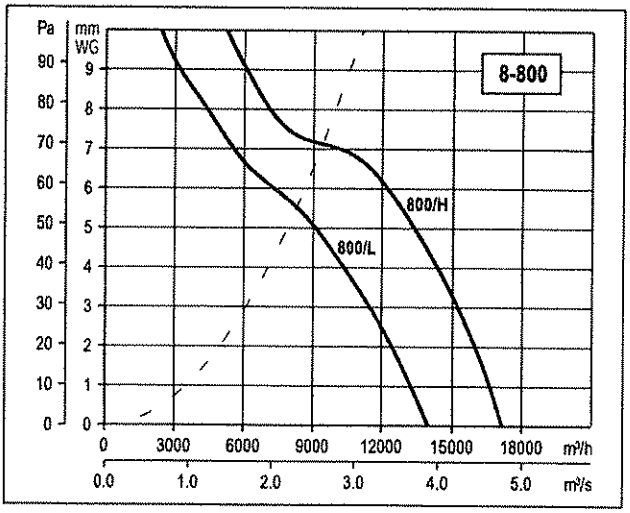

03/12/18

Performance curves - HCFB/HCFT - HCBB/HCBT

- Q = Air volume in, m^3/hr and m^3/s
- Pe = Static pressure in mmWG and Pa.
- Dry air at 20 °C and 760 mmHg.
- Air flow data in accordance with the following standards: UNE 100-212-89, BS 848, Part 1, AMCA 210-85 and ASHRAE 51-1985.

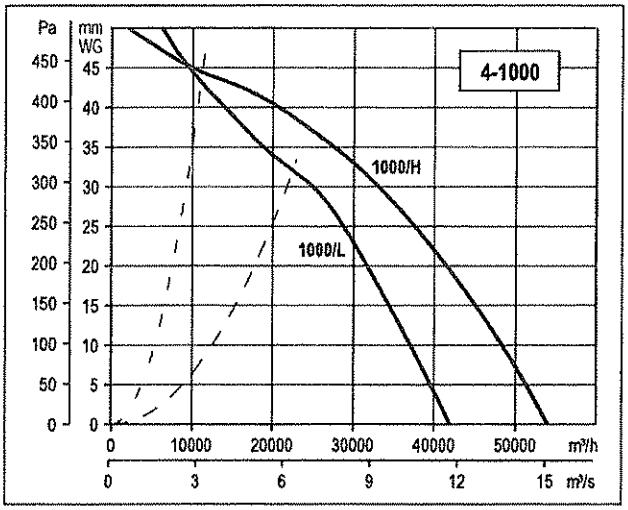

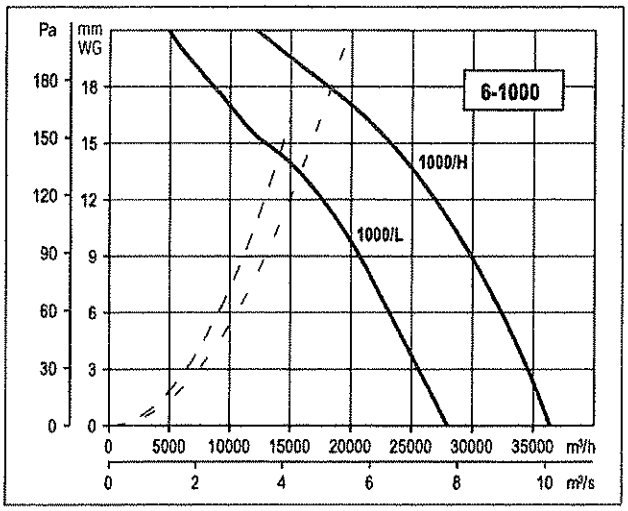

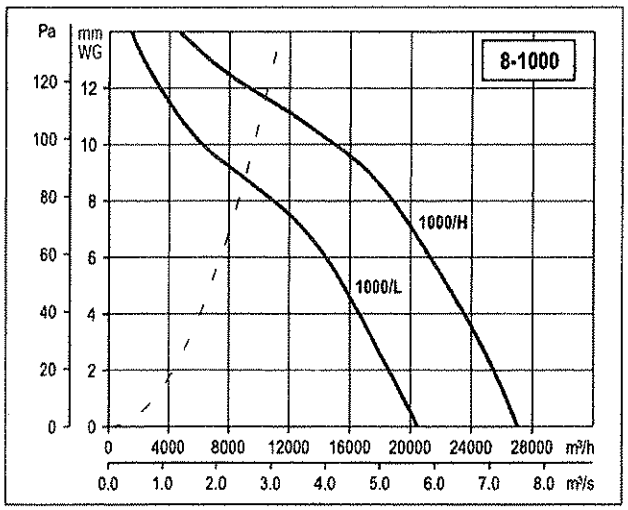

03/12/18

SANITAIRE
a xylem brand

Aeration Design Analysis

KARKANIAS AERATION 2

Created by: Michalis Roubeas

03/12/18

Project Information

Project name	KARKANIAS AERATION 2
Project number	
Project description	
Customer name	
Rep/Distributor name	
WWTP name	
WWTP location	
Sales company	IDATOR WASTEWATER SA
Created by	WORLD\MROUMBEA
Design engineer	Michalis Roubeas
Modified by	WORLD\MROUMBEA
Creation date	9/6/2017
Modification date	9/6/2017

03/12/18

Project Input Data

Tank Geometries

Parameter	Unit	Tank 1:Pass 1	Tank 1:Pass 2			
Tank geometry (7), (8)		Racetrack	Racetrack			
No of zones		2	2			
Divider wall length	m	21	21			
Channel width	m	4.525	4.525			
Divider wall thickness	m	0.3	0.3			
Water depth	m	5	5			

Design Conditions

Parameter	Unit	System condition 1				
Design based on		SOR				
Oxygen requirement	kg/h	72				

Standard Oxygen Correction Factors

Site elevation	m	0				
Ambient pressure	kPa	101.3				
Water temperature	C	20				

Oxygen/Air Distribution

Distribution	Tank 1:Pass 1:Zone 1	Tank 1:Pass 1:Zone 2	Tank 1:Pass 2:Zone 1	Tank 1:Pass 2:Zone 2	Total	
Distribution 1	50	0	50	0	100%	

03/12/18

Design Summary

Performance Data

Parameter	Unit	System condition 1 : Distribution 1				
No. of operating disc diffusers		192				
SOR	kg/h	72				
SOTE average	%	31.01				
Total air flow (9)	Nm³/h	774.5				
Air flow per diffuser, min (9)	Nm³/h	4.03				
Air flow per diffuser, max (9)	Nm³/h	4.03				
Top of dropleg pressure, max (4)	kPa	53.2				
Diffuser DWP at min air	kPa	4.18				
Diffuser DWP at max air	kPa	4.18				
Dropleg velocity at min air	m/s	9.68				
Dropleg velocity at max air	m/s	9.68				

Equipment and Grid Design Information

Parameter	Unit	Tank 1:Pass 1:Zone 1	Tank 1:Pass 2:Zone 1			
Product		9" SSII 2802	9" SSII 2802			
Grid count		1	1			
No of operating disc diffusers per grid		96	96			
Header count per grid		6	6			
Dropleg/Manifold		110mm PVC	110mm PVC			
At/Ad number		8.662	8.662			

Notes:

03/12/18

Detailed Performance Data

System condition 1 : Distribution 1

Input Data

Parameter	Unit	Tank 1:Pass 1:Zone 1	Tank 1:Pass 2:Zone 1			
Floor length	m	7	7			
Floor width	m	4.525	4.525			
Water depth	m	5	5			
Submergence	m	4.77	4.77			
Volume	m^3	158.4	158.4			
Distribution	%	50	50			
SOR	kg/h	36	36			
Water temperature	C	20	20			

Performance Data

Safety factor	%	0	0			
Mixing criteria	$Nm^3/h/m$	2.04	2.04			
Mixing air (9)	Nm^3/h	64.567	64.567			
Process air (for SOR) (9)	Nm^3/h	387.25	387.25			
Design air (1), (9)	Nm^3/h	387.25	387.25			
Air flow per diffuser, (9)	Nm^3/h	4.03	4.03			
Delivered SOR (2)	kg/h	36	36			
Actual Distribution	%	50	50			
Delivered SOTE (3)	%	31.01	31.01			
Top of dropleg pressure (4)	kPa	53.2	53.2			
Dropleg velocity	m/s	9.68	9.68			

03/12/18

Headloss Summary

System condition 1 : Distribution 1

Grid Design

Parameter	Unit	Tank 1:Pass 1:Zone 1	Tank 1:Pass 2:Zone 1			
Grid count		1	1			
No. of disc diffusers per grid		96	96			
Dropleg/Manifold		110mm PVC	110mm PVC			
Header count per grid		6	6			
Header spacing	mm	435	435			
Manifold length	m	2.17	2.17			
Header length	m	5.43	5.43			
Manifold location		End	End			
Dropleg location		End	End			

Grid Pressure

Air flow per grid (9)	Nm³/h	387.25	387.25			
Diffuser air flow (9)	Nm³/h	4.03	4.03			
Submergence	m	4.77	4.77			
Orifice diameter	mm	5 mm	5 mm			
Static header pressure differential in assembly	kPa	6.14E-2	6.14E-2			
Average header pressure in assembly	kPa	53.127	53.127			
A: Average Headloss from top of dropleg to headers	kPa	1.03E-1	1.03E-1			
B: Diffuser orifice headloss	kPa	2.21E+0	2.21E+0			
C: Diffuser dynamic wet pressure	kPa	4.18E+0	4.18E+0			
D: Static pressure	kPa	46.735	46.735			
Total pressure required at top of dropleg (A+B+C+D)	kPa	53.23	53.23			
Friction headloss (A+B)	kPa	2.31E+0	2.31E+0			

03/12/18

Notes

(1)	Design air is the maximum of process air or mixing air.
(2)	Delivered oxygen based on design air.
(3)	Performance based on diffuser density (At/Ad), submergence, and diffuser unit air flow.
(4)	The pressure at top of dropleg is defined above the water surface, including a 90° elbow.
(5)	The pressure at bottom of dropleg is defined under the water surface, where the PVC plastic dropleg pipe connects to the stainless steel dropleg pipe.
(6)	If the AOR/SOR parameter is not given, then its value will be evaluated later if suitable alpha, beta, D.O., theta, pressure, and temperature data is supplied.
(7)	Round tanks are evaluated as rectangular tanks diameter equal to length and equal surface area.
(8)	Annular tanks are evaluated as rectangular tanks of width equal to the annular width and equal surface area.
(9)	Nm^3/h, air flow defined at 0°C.
(10)	Specified volume is used to design basins with irregular geometries. Specified volume can also be given directly by the client. By default, Xylem calculates basin volume with standard formulas for regular solids given basin footprint dimensions and water depth.

03/12/18

AOR/SOR Calculation

The ratio of actual site oxygen transfer to standard condition oxygen transfer, (AOR/SOR), is dependent on a number of factors:

20°C:	Standard Condition Temperature	Beta:	Field/Std. Condition O2 Saturation Ratio
T°C:	Operating Water Temperature	Theta:	Operating Water Temperature Factor
P_{std}:	Std. Condition Ambient Pressure (1 Atmosphere)	DO:	Operating Oxygen Concentration
C_{surfT}:	Clearwater Surface O2 Saturation at operating Temperature	C^*_{sat20}:	Std. Condition Aerated O2 Saturation in the tank
P_{site}:	Site Ambient Pressure	9.09:	Clearwater Surface o2 Saturation av 20C
Alpha:	Field/std. Condition KIA Ratio		

$$\frac{AOR}{SOR} = \frac{\alpha\theta^{(T-20)}\left[\beta C^*_{sat20}\left(\frac{P_{site}}{Pstd}\right)\left(\frac{C_{surfT}}{9.09}\right) - DO\right]}{C^*_{sat20}}$$

03/12/18

Glossary of Terms

# Zones	Number of taper zones or zones of unique diffuser count in the pass.
Air Distribution Header	Pipes connecting to the manifold to which the diffusers are mounted. In the case of PVC systems, the diffuser holders are glued onto the crown or top of the air distribution header. For stainless steel systems, diffuser connectors are welded onto the invert or bottom of the pipe.
Air Header	See Air Distribution Header.
Annular Tank	Sometimes called a doughnut tank. This tank consists of a center circular tank, commonly a clarifier and an outer wall. The resulting annulus is segregated into compartments for process functions like digestion or aeration.
At/Ad	The ratio of tank area over the fine bubble diffuser area. The reciprocal of At/Ad is the percentage of floor coverage by fine bubble diffusers.
Center Wall Width	Thickness of the dividing wall for an oxidation ditch.
Channel Width	For ditch geometry, channel width refers to the dimension between the dividing wall and the outer wall of the ditch.
Delivered SOR	The Standard Condition Oxygen transfer rate delivered at the Design Air flow rate.
Delivered SOTE	The Standard Oxygen Transfer Efficiency at the Delivered SOR and Process air rate.
Design Air	The air flow used to determine system performance. It is the maximum of the Mixing Air and Process Air.
Dropleg	Vertical pipe connecting air main at top of tank to the floor mounted aeration equipment.
Floor Length	For Slope wall tanks, refers to the length measured at the floor of the basin. Aeration design uses this value in designing the piping layout.
Floor Width	For Slope wall tanks, refers to the width measured at the floor of the basin. Aeration design uses this value in designing the piping layout.
Geometry	Refers to general shape of the tank: Rectangular (Square), Circular, Slope Wall (Trapezoidal), Annular, or Oxidation Ditch
Grid	A single unit of aeration equipment consisting of a dropleg, diffusers, and manifold. Depending on the number of air distribution headers, the manifold may be omitted. Frequently, coarse bubble, stainless steel systems may not have a manifold. PVC systems almost always have a manifold.
Grid Length	For ditch geometry, the grid length dimension allows modifying the grid dimensions to accommodate mixers or other appurtenances in the ditch. If aeration design will design 1, 2, 3, or 4 ditches per basin. User must input number of parallel tanks as 1,2,3, or 4 and set grid length to an appropriate value. For example, a straight length of 100' and 4 grids means the grid length must be less than 50'.
Header	See Air Distribution Header.
Manifold	Horizontal pipe that is the terminating point of the dropleg. The manifold has connections to feed air to the air distribution headers.
Mixing Air	The air flow rate based on Mixing Criteria.

03/12/18

Mixing Criteria	Aeration systems serve two purposes: oxygenation and mixing of the suspended growth process. A certain amount of mixing energy is required to keep the solids mixed and suspended. In some processes, the air required for the oxygen transfer is not enough to keep the solids mixed. This situation is described as 'mixing limited'. In these cases, the air flow must be adjusted to the mixing criteria. By default, Sanitaire applies the WEF MOP/8 mixing criteria (Design of Municipal Wastewater Treatment Plants, Fourth Edition, WEF Manual of Practice 8, ASCE Manual and Report on Engineering Practice No. 76, pg. 11-83) of 0.12 scfm/ft² (2.19 m³/hr/m²). Spiral roll aeration systems generally require 15 - 25 scfm/kcf for mixing. Users may use any value for mixing criteria. Note Fine Bubble Mixing Criteria is air/area and Coarse Bubble Mixing Criteria is air/volume.
Oxidation Ditch	An oval shaped tank described as a rectangle with a half circle at either end. The rectangular area is bisected along its length by a dividing wall.
Oxygen Distribution	Number of taper zones or zones of unique diffuser count in the pass
Pass	A pass is a subdivision of a train. A single train (tank) with a serpentine flow path comprises a multiple pass system. A single tank with transverse baffle walls comprises a multiple pass system. Likewise, a single trains with several discrete basins is a multiple pass system.
Process Air	The air flow required for a given oxygen transfer rate.
SOR	Standard Oxygen Transfer Rate. Oxygen transfer rate defined at 20°C, 1 Atmosphere ambient pressure and clear water (alpha=1; beta=1).
Straight Length	For ditch geometry, straight length refers to the dimension from the end of one curve to the start of the second curve.
Surface Length	For Slope wall tanks, refers to the length measured at the elevation equal to the water depth of the basin.
Trains	A train is a treatment unit. Broadly, a train is a single treatment tank.
Trapezoidal Tank	A slope wall tank having rectangular footprint at both the floor and the water surface.

03/12/18

The selected mixer/mixers in this aeration system, must be manually positioned according to the Xylem Mixer Positioning Principles.

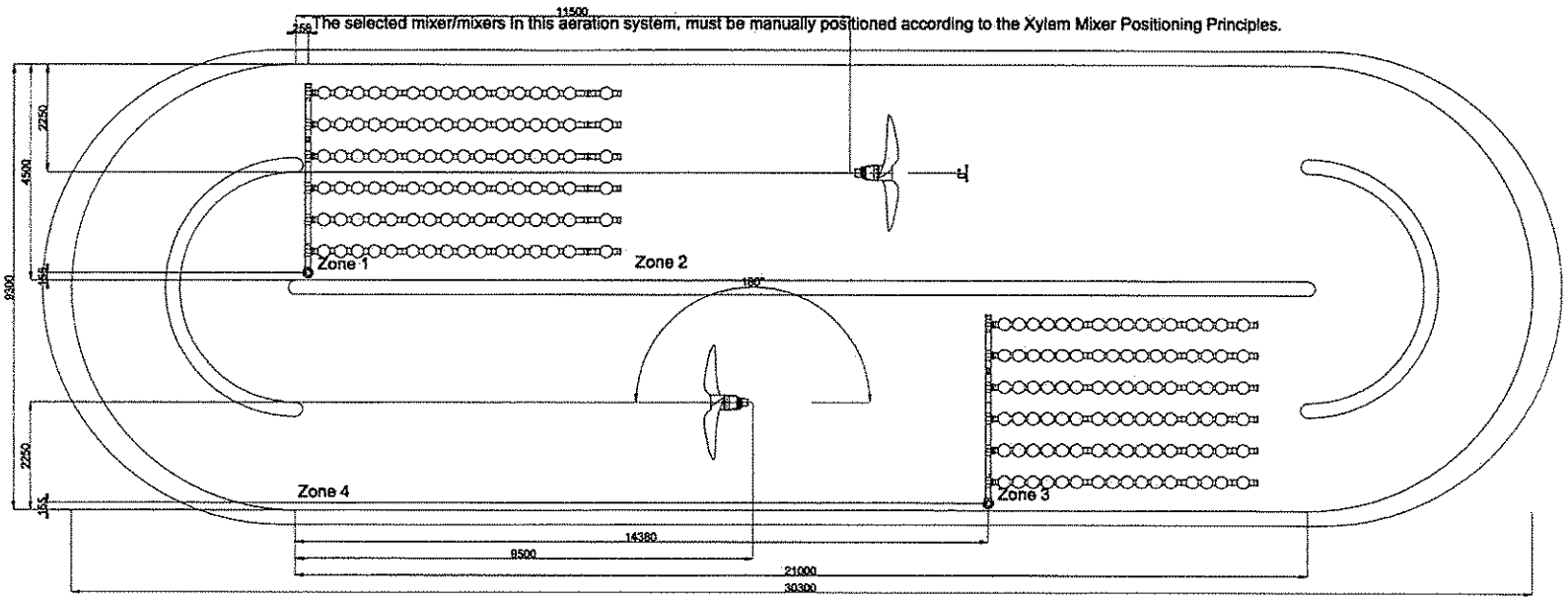

SECAD Aeration

Product	Diffuser			Header Pipe	SS Grade
A	9" SS# 2802, 5 mm orifice			110mm PVC	SS 304

Zone	Product	Diffusers	Total Diffuser Area [m²]	Nominal Header Spacing [mm]	Nominal Diffuser Spacing [mm]	Manifold	Zone Length
1	A	96	3.96	860	350	110mm	7.00 m
3	A	96	3.96	860	300	110mm	7.00 m

Mixers

Zone	Mixers	Mixer model	Propeller code	Propeller diameter [mm]	Min. Submergence [mm]	Min. distance propeller to bottom [mm]	Min. distance propeller to wall [mm]
2	1	4410	Not available	2.50	Not available	0.30	0.30
4	1	4410	Not available	2.50	Not available	0.30	0.30

Disclaimer
The accuracy of the output is based on the accuracy of the input data, and it is the responsibility of those supplying that information to verify that the data is correct. The drawing is supplied for reference only, based on Flygt equipment, and is meant for preliminary sump design and system evaluation. A professional engineer, licensed in the appropriate field of engineering, should always conduct the final evaluation of the application if there are liabilities involved.

A1

Designed by	Drawn by	Date	Scale
Checked by	Date 9/6/17	Description Conceptual drawing	Scale 1:50
Approved by			
Approved by			

xylem

This document may not without the permission, be copied, shown or handed out to competitors or any other unauthorized persons.

Drawing No. Aeration[2]

SECAD™ 5.2.4.1 (5.2) Standard

03/12/18

FLYGT SANITAIRE®

xylem
Let's Solve Water

Aeration products

FOR ENERGY-EFFICIENT BIOLOGICAL TREATMENT

03/12/18

Greater energy savings are in the air

Stricter environmental regulations and rising energy costs are forcing wastewater treatment plants to ensure wastewater discharge compliance and at the same time make operations more energy efficient. One of the main areas for environmental and cost savings lies just below the surface of your biological tanks.

Uncover submerged energy savings
Aeration systems today represent an estimated 30 to 70 percent of the total energy costs at a typical wastewater treatment plant. By making your plant's biological treatment processes more efficient, you can realize big energy savings and lower your operating costs.

Reliable cost-effective aeration solutions
Proven reliable for more than 40 years, comprehensive aeration solutions from Sanitaire and Flygt meet virtually every need and operating condition. From fine-bubble diffusers complete with framework, piping, supports and energy-saving blowers to coarse-bubble diffusers and stand-alone mechanical aerators, our aeration systems reduce both your capital expenditures and operating and maintenance costs. Plus they are backed by precise monitoring and control systems.

Optimizing your aeration processes
Although we offer the best aeration equipment, equipment isn't everything. Competence is. Our engineers put more than four decades of expertise and a true passion for high oxygen transfer to work to ensure environmentally sound operations at your plant. So everything you need to know about improving your aeration processes is available through a single and reliable partner.

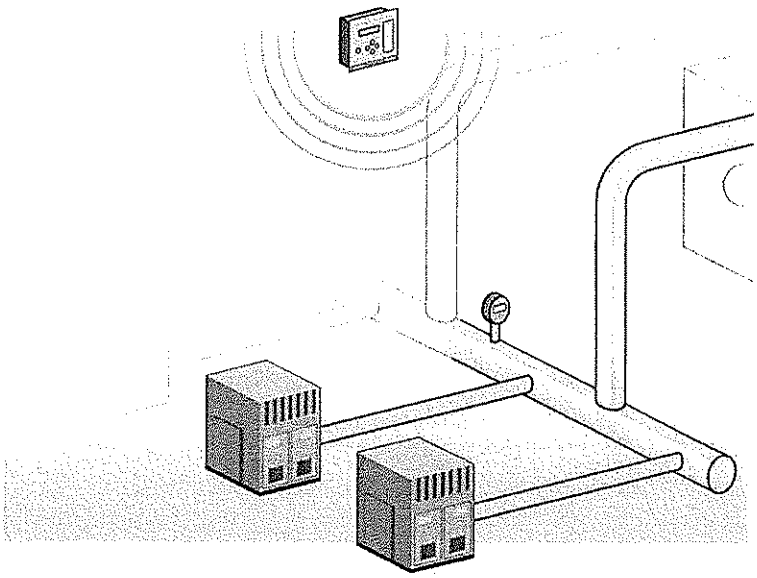

Contents

	Page
Diffused aeration	**4-11**
· Sanitaire Gold Series diffusers	5
· Sanitaire Silver Series II diffusers	6
· Sanitaire ceramic diffusers	7
· Sanitaire diffuser holders	8
· Sanitaire grid components	9
· Sanitaire coarse bubble wide-band diffusers	10
· Blowers	11
Mechanical aeration	**12-13**
· Flygt jet aerators	12
Monitoring and control	**14**
Support and service	**15**

03/12/18

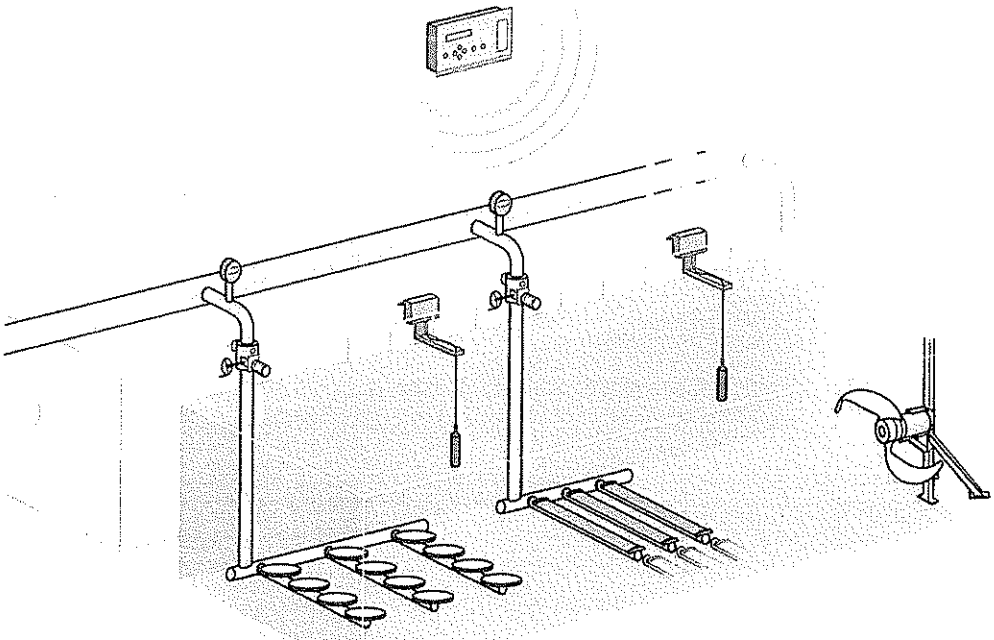

To optimize your process, we design, deliver, commission and, through control systems, support the operation and maintenance of your aeration system – from blowers to diffusers.

We understand how different operating strategies and equipment selection affect energy consumption and costs. So we can determine where additional operational efficiencies can be realized. Introducing an automated monitoring and control system or combining diffusers with mixers, for instance, can drastically boost efficiency and energy savings.

Whatever the challenge, be sure to take advantage of our vast aeration engineering expertise. This not only will improve aeration efficiency at your plant, but enable you to focus on increasing the profitability of your core business.

More oxygen delivered per kilowatt hour

Factors to consider when designing your aeration system:

Standard oxygen transfer efficiency (SOTE)

Used to compare oxygen transfer efficiency, SOTE is the ratio between the amount of oxygen transferred and the amount actually delivered. Per-formance can reach up to 60% depending on the water depth and airflow rate.

Standard aeration efficiency (SAE)

SAE is the ratio between the amount of oxygen transferred to the water and the amount of energy used. Typical values are 1-2 kg O_2/kWh for mechanical aeration systems and 2-8 kg O_2/kWh for diffused aeration systems.

SAE reflects both SOTE as well as blower efficiency and the system pressure loss.

Which aerator is right for you?

Treatment stages	Applications	Diffused aeration	Mechanical aeration
Preliminary and primary	Grit chamber	Coarse bubble	
	Retention basin	Coarse bubble/Fine bubble	Jet aerator
Secondary	Biological aeration	Fine bubble	Jet aerator
Tertiary	Aeration before discharge	Fine bubble	
Sludge	Aerobic digestion		Jet aerator
	Sludge holding	Coarse bubble/Fine bubble	Jet aerator
	Odor control	Fine bubble	Jet aerator

03/12/18

Dissolving into thin air

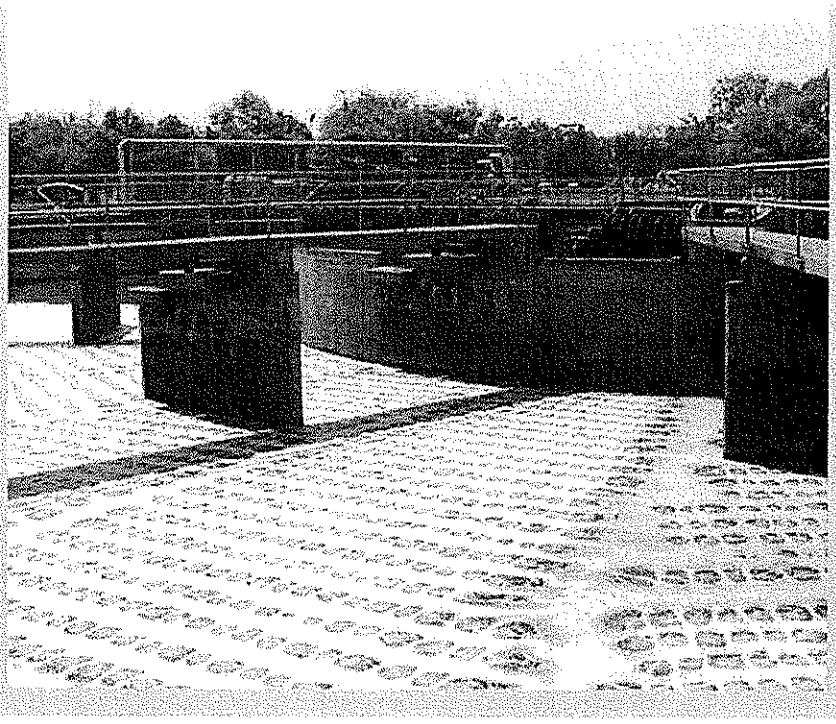

Grid components

To support Sanitaire fine bubble diffused aeration systems, we offer standardized grid components.

See page 9.

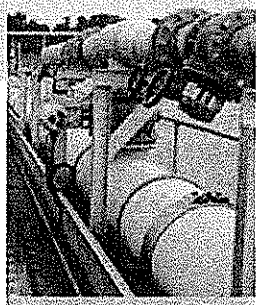

Air supply

No aeration system would be complete without an air supply and distribution system. Using in-house tools, we optimize designs for temperature and pressure considerations. We also complement Sanitaire aeration system with dependable blowers.

See page 11.

For reliable oxygen transfer in all types of wastewater aeration applications, choose Sanitaire® diffused aeration systems. No matter the tank geometry or process application, Sanitaire systems have proven effective in thousands of communities and industries worldwide.

Customize your system
Select the right components from the Sanitaire range and combine them with an air piping system, required support and an energy-efficient blower.

Fine-bubble diffusers
Sanitaire fine-bubble diffusers are generally employed for biological aeration, pre-discharge aeration and sludge holding odor control. Choose between Sanitaire Gold Series for high efficiency, Sanitaire Silver Series II membrane diffusers for standard and low-pressure aeration applications and the durable Sanitaire ceramic diffusers for applications that require corrosion resistance.

Coarse-bubble diffusers
For tougher applications such as sludge or industrial wastewater, Sanitaire coarse-bubble diffusers are the preferred technology. Typically used in grit chambers, retention tanks and sludge holding tanks, the Sanitaire wide-band diffuser doesn't disappoint.

03/12/18

Sanitaire Gold Series diffusers

Sanitaire Gold Series membrane diffusers are the latest innovation in fine-bubble aeration technology. Wherever high-density coverage and low flux rates are required, these can be tightly packed across any given basin floor area to provide unsurpassed aeration efficiency.

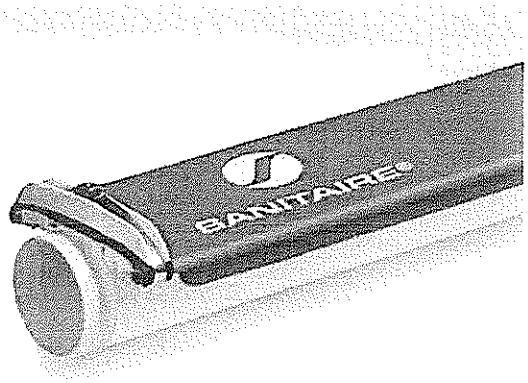

Energy efficiency
The unique diffuser geometry, and advanced micro-punched membrane enable high-density basin floor coverage and low air flux, which together provide high oxygen transfer using the lowest possible amount of energy. The membrane is engineered for low head loss thereby reducing energy consumption further.

High reliability
Thick, highly pliable polyurethane membranes outlast others in accelerated aging tests. Dependability is further enhanced by the watertight construction of the end fittings and sealing system, which withstand the stress of daily operation. It has even proven to be adapted to air-on/air-off applications.

Ease of installation
Compactness makes these complete, pre-assembled diffusers easy to install. This translates into faster commissioning, smarter use of resources and, ultimately, higher productivity.

Modularity
Modular design facilitates installation as well as low-cost, no-hassle retrofits because all Sanitaire components are interchangeable to enable optimization of aeration system performance.

Performance curves
Gold Series

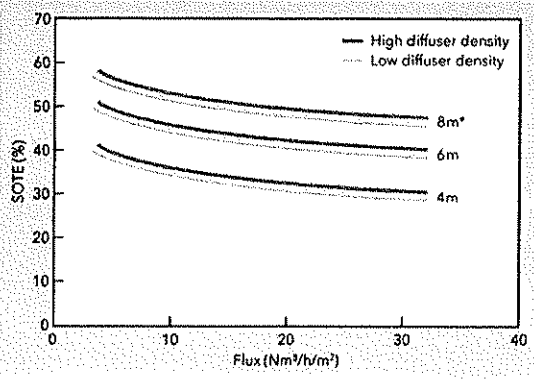

*Submergence

Technical data

Membrane material	Polyurethane
Lengths	2,286 mm (90 in) 1,500 mm (59 in) 700 mm (28 in)
Airflux range	3.7-37 Nm³/h /m² 0.2-2 scfm /ft²
Standard oxygen transfer efficiency (SOTE)	7-10% per m submergence 2.2-3% per ft
Standard aeration efficiency (SAE)	3-8 kg O_2 /kWh 8-15 lbs O_2 /hph

03/12/18

Sanitaire Silver Series II diffusers

For a combination of high aeration efficiency and low operating costs, there's the Sanitaire Silver Series II membrane diffuser - the most widely used fine bubble diffused aeration system available today.

High oxygen transfer efficiency
The Sanitaire Silver Series II membrane features a unique slit pattern and slit shapes, which disperse air bubbles in an extremely fine, uniform pattern for optimal oxygen transfer.

Long service life, low maintenance
The high elasticity and degradation-resistance of specially blended high-grade EPDM elastomer compounds contribute to a service life of 10 or more years.

Operating efficiency
The unique membrane shape, integrated O-ring and top-sealing threaded retainer ring eliminates leakage. This reduces energy consumption and raises operating efficiencies.

Great application flexibility
A highly effective, integrated check valve enables the aeration zones to easily be shut down for air-on/air-off applications.

Sanitaire Silver Series II LP
This 9" low-pressure version of the Sanitaire Silver Series II membrane features a modified slit pattern to handle airflow up to 17Nm³/h (11 scfm) with minimal pressure loss. It is an excellent choice for sludge and other heavy-duty applications.

Performance curves
Silver Series II

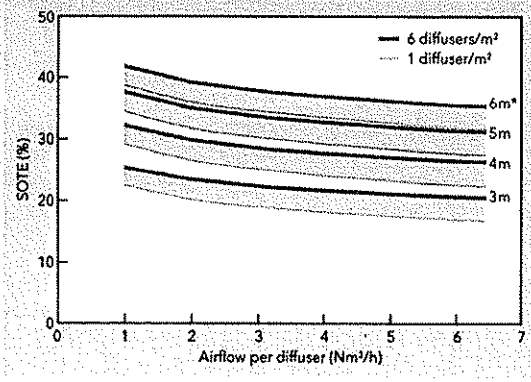

*Submergence

Technical data

Disc material	Specially blended high-grade EPDM
Diameter	178 or 229 mm (7 or 9 in)
Airflow range per disc	0.8-7 Nm³/h (0.5-4.5 scfm)
Standard oxygen transfer efficiency (SOTE)	Approx. 6.5% per m submergence (2% per ft)
Standard aeration efficiency (SAE)	2.5-6 kg O_2 /kWh (4-10 lb O_2 /hph)

03/12/18

Sanitaire ceramic diffusers

Sanitaire ceramic diffusers handle aeration of aggressive, highly corrosive wastewater, delivering high oxygen transfer both efficiently and cost effectively.

Low total cost of ownership
Sanitaire ceramic discs are specially compression-molded to achieve optimal contours for high oxygen transfer efficiency at low operating pressures. Variable areas of density across the disc surface promote uniform airflow distribution. This contributes to low system head loss, low energy consumption, low operating costs and, thereby, a low total cost of ownership.

Energy efficiency
Sanitaire ceramic discs feature a top-sealing threaded retainer ring, which ensures an airtight seal. As air pressure increases, the sealing force on the O-ring increases thus creating an airtight seal. Because there are no air leaks, no energy is wasted.

20-year-long life expectancy
Durable, reliable and clog-resistant, Sanitaire ceramic discs are low-maintenance diffuser elements that typically last 20 or more years. To prolong service life further, an optional in-place gas cleaning system enhances continuous performance.

Performance curves
9" ceramic

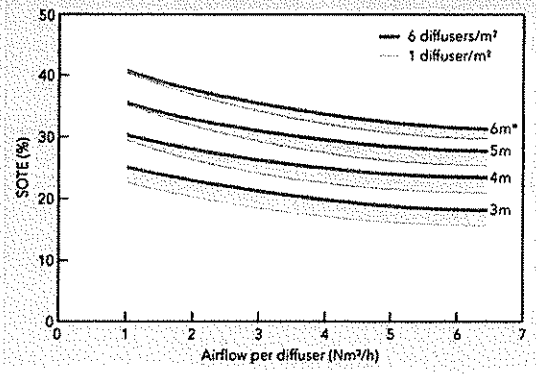

*Submergence

Technical data

Disc material	Special compression-molded ceramic
Diameter	178 or 229 mm (7 or 9 in)
Airflow range per disc	0.5–4.7 Nm³/h (0.3–3 scfm)
Standard oxygen transfer efficiency (SOTE)	Approx. 6.5% per m submergence (2% per ft)
Standard aeration efficiency (SAE)	2.5–6 kg O_2 /kWh (4–10 lb O_2 /hph)

03/12/18

Sanitaire diffuser holders

These easy-to-install Sanitaire diffuser holders provide superior mechanical strength to support Sanitaire Gold Series and Silver Series II membranes and Sanitaire ceramic discs.

Sanitaire 2300 holder
Designed for use with Sanitaire Silver Series II membranes, Sanitaire Silver Series II LP membranes and Sanitaire ceramic discs.

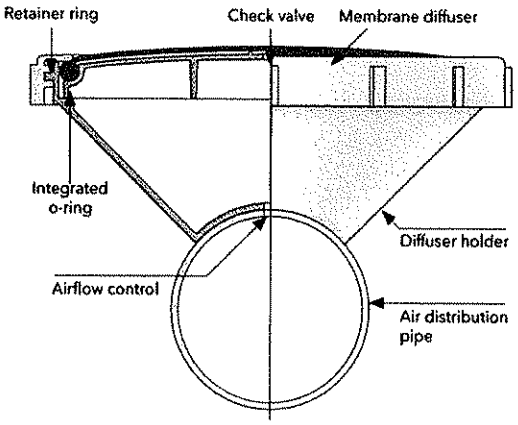

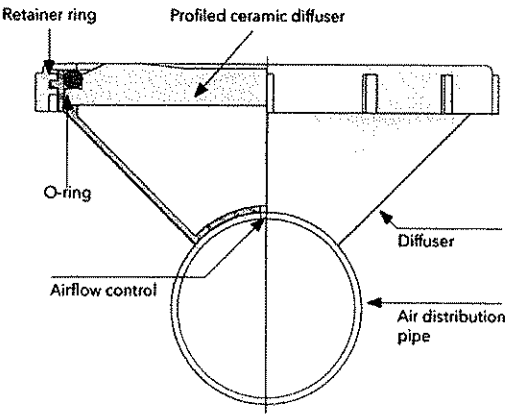

Sanitaire 2802 holder
A cost-effective alternative, the Sanitaire 2802 is designed for use with the Sanitaire Silver Series II and Silver Series II LP membranes.

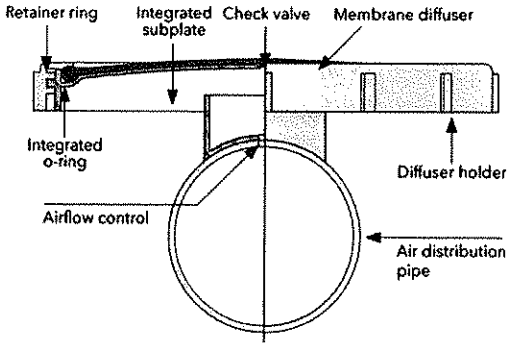

Sanitaire Gold Series holder
Designed for use with Sanitaire polyurethane membranes and based on the highly efficient cross-section of the 7" holder.

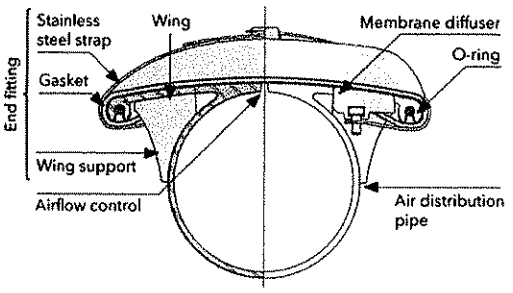

03/12/18

Sanitaire grid components

Beneath every Sanitaire diffused aeration system is a solid foundation. These components are integral to the Sanitaire fine bubble range and hold important supporting roles.

Solid framework
Patented Sanitaire spline joints ensure firm connection of air supply pipes from the dropleg to the diffusers. Engineered to withstand thermal expansion and contraction, water hammer and other dynamic stress, these spline joints securely fasten the pipes, thereby preventing air leakage, pipe blowapart and pipe rollover.

Upstanding system support
Made of durable corrosion-resistant stainless steel, Sanitaire guide supports securely anchor Sanitaire diffused aeration systems. These robust threaded supports feature an infinite height adjustment mechanism to ensure accurate grid leveling. The pipe bracing assembly accommodates pipe expansion while providing a stable foundation. Specially reinforced Sanitaire guide supports are available for high velocity and mixer zones.

Easy to adapt
Sanitaire air distribution pipes are delivered with factory-welded diffuser holders and Sanitaire Gold Series are delivered as pre-assembled units, to facilitate installation. Moreover, Sanitaire grid components are fully interchangeable with your existing system. To meet more stringent emissions requirements, for example, it's easy to replace Sanitaire ceramic discs with Sanitaire Gold Series or Silver Series II membranes.

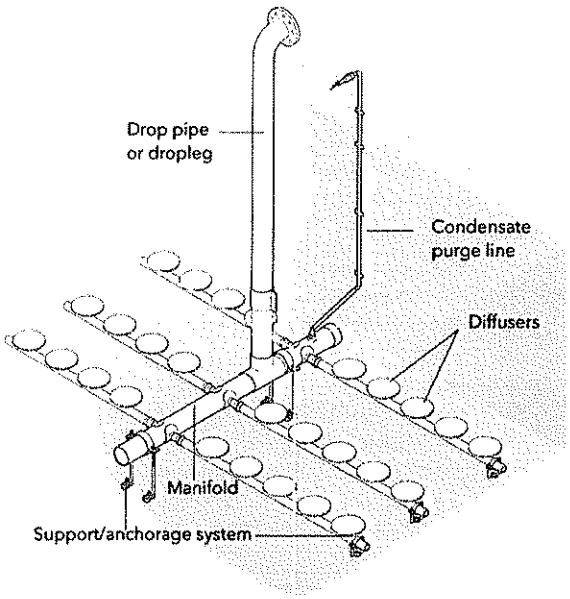

Aeration purging
After condensation, water levels in the manifold can rise and extend to the headers. To deal with water buildup, we offer a separate purge system that removes condensate from the lowest point in the system.

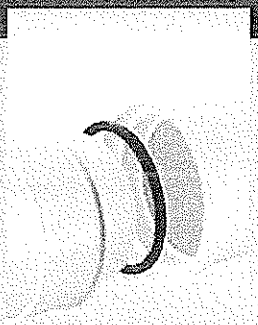
Spline joints

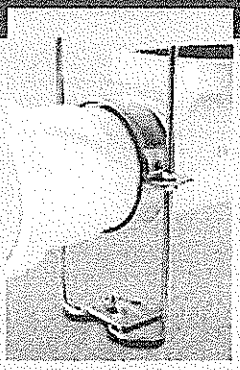
Adjustable grid support

Technical data	
Dropleg	Stainless steel AISI 304 or 316
Manifolds	Stainless steel, specially formulated polyvinyl chloride (PVC) to prevent UV degradation.
Distribution headers	PVC or CPVC for higher temperatures
Supports and anchor bolts	Stainless steel AISI 304 or 316
Gaskets	EPDM

03/12/18

Sanitaire coarse bubble wide-band diffuser

The Sanitaire stainless steel wide-band diffuser is an excellent choice and a smart alternative to mechanical aeration. It is especially suited to tough sludge-related applications such as aerobic sludge digestion, grit chambers, flow equalization and channel aeration.

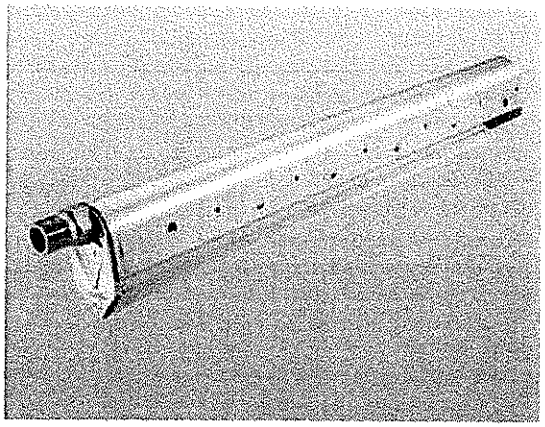

Clog-resistant, maintenance-free design
The Sanitaire wide-band diffuser features an innovative inverted air reservoir. This stores a sufficient air volume at the centre of the diffuser for use to ensure continuous and uniform airflow. This prevents clogging. Another smart feature is a bottom deflector, which prevents the entry of debris into the diffuser and reduces the need for maintenance.

Erosion/corrosion resistance
Thanks to immersion passivation after fabrication, the Sanitaire wide-band diffuser is erosion/corrosion-resistant and maintains full structural integrity even in welded heat-affected zones. This prolongs service life.

Solid oxygen transfer efficiency
Dual horizontal levels of diffusion ports on the diffuser side ensure uniform air distribution and aeration efficiency.

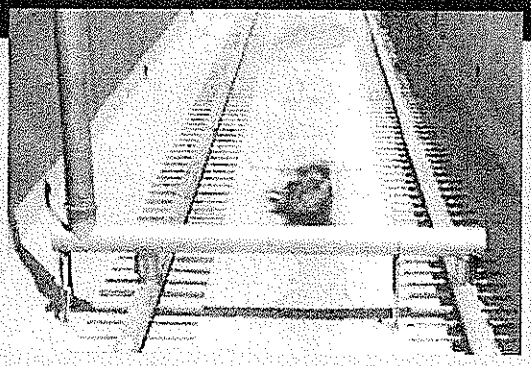

Technical data	
Material	Stainless steel AISI 304 or 316
Length	305 or 610 mm (12 or 24 in)
Airflow range per band	15–63 Nm³/h (10–40 scfm)
Standard oxygen transfer efficiency (SOTE)	1.6–2.5% per m submergence (0.5–0.8% per ft)
Standard aeration efficiency (SAE)	0.7–2 kg O_2 /kWh (1.1–3.5 lbs O_2 /hph)

03/12/18

Blowers

Optimizing your aeration systems is of paramount importance. Which is why we can complement every Sanitaire diffused aeration system with a fully packaged blower system that is reliable, energy-efficient and easy to maintain.

It takes experience and expertise to select the right blower for your aeration system. We have both. We understand the parameters that influence blower selection - from energy efficiency and reliability to life cycle cost, operational flexibility and installation footprint through to noise levels and maintenance requirements.

Whatever your aeration needs, we help you select the right blower from among these technologies, which are typically found in a wastewater treatment plant.

Rotary lobe blowers
A pair of spinning rotors delivers a fixed volume of air for each rotation. Rotary lobe blowers rely upon external compression whereby the air is compressed by the system backpressure. While these offer the advantage of low capital investment costs upfront, they also provide low efficiency.

Screw rotor blowers
A pair of intermeshing screws progressively reduces the volume of air as it moves along the length of the screw element. These provide higher efficiency than other positive displacement blowers due to the use of internal compression.

Multi-stage centrifugal blowers
Multiple impellers are mounted on a single low-speed shaft normally operating at a fixed speed. These are employed for larger flows and require less capital investment than other types of centrifugal blowers, however are also generally less efficient.

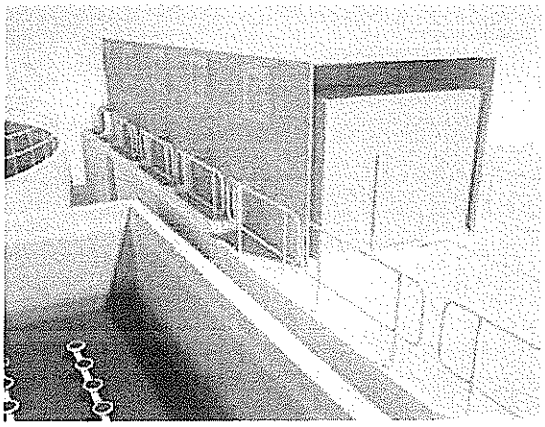

Single-stage, integrally geared centrifugal blowers
A single impeller achieves higher rotational speed via a step-up gear. These can be equipped with variable inlet guide vanes and diffuser vanes to achieve high efficiency over a range of operating flows. Single-stage, integrally geared blowers are more efficient than positive displacement and multi-stage centrifugal blowers.

Variable-speed, single-stage direct-drive centrifugal blowers
A single or dual impeller is mounted directly on to the shaft of a high-speed motor with low-friction magnetic or air foil bearings. These have integrated VFD (variable frequency drive) to match pressure and flow rate demands. While more expensive than positive displacement and multistage centrifugal blowers, these are more efficient, with magnetic bearing blowers often being more efficient than those with air foil bearings.

03/12/18

Flygt jet aerators

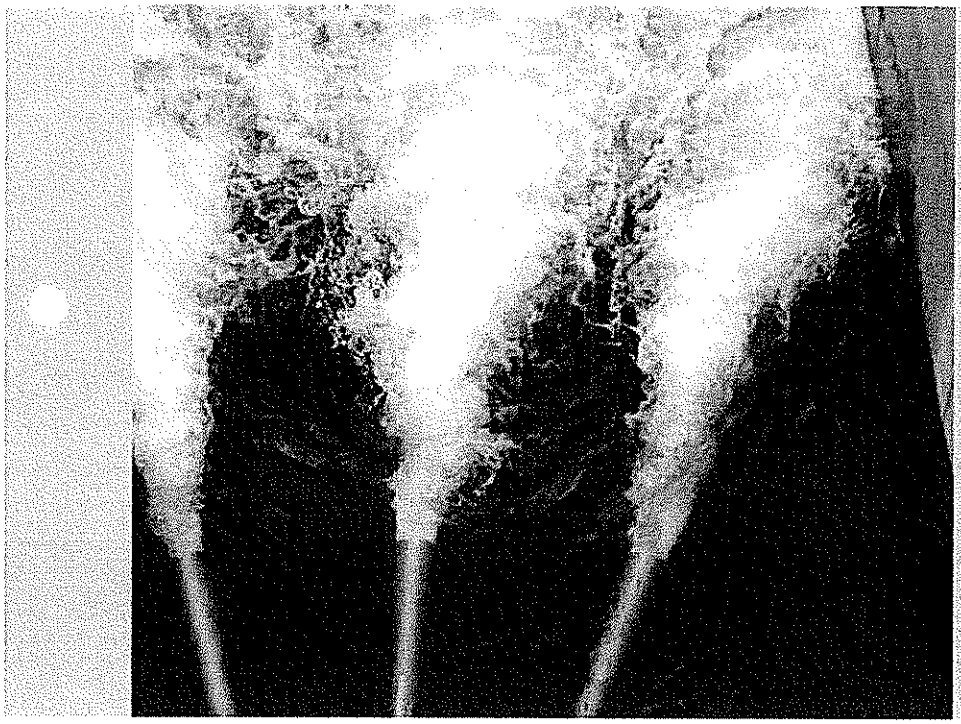

Mechanical aeration systems from Flygt provide an affordable alternative to our highly efficient diffused aeration systems. Convenient lift-in, lift-out solutions, submersible Flygt jet aerators provide reliable, low-cost oxygen transfer for small to medium-sized sludge tanks, retention tanks and bio-reactors.

Quick, low-cost installation
Convenience doesn't come easier than with Flygt jet aerators. Simply lift and position these stand-alone aeration systems into any small to medium-sized tank without having to empty it, using the Flygt pump lift and chains. Installation is complete. Then plug in Flygt jet aerators and let them work. No blowers, special housing or superstructures are required.

Proven long-term reliability
Flygt jet aerators provide maximum uptime and minimal maintenance. Proven N-technology, a specially engineered Flygt ejector assembly and air suction pipe bend combine to provide high operational reliability.

Better working environment
Because the submersible Flygt jet aerator rests on the tank bottom, there's significantly less spray and lower noise levels and vibrations. This greatly improves the working environment.

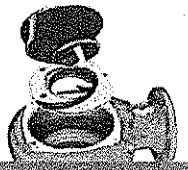

Proven N-technology

Flygt jet aerators feature Flygt N-pumps with N-technology, renowned for its non-clogging design and high efficiency.

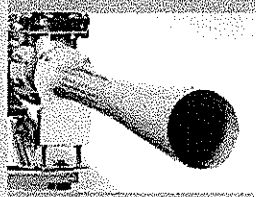

Ejector assembly

The robust, non-clogging ejector assembly creates high turbulence where wastewater combines with air to form a liquid jet containing fine air bubbles.

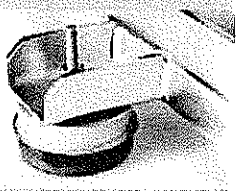

Pump feet

Robust stand with damper feet prevents vibration, which could damage the ejector system.

03/12/18

Operational flexibility
Compact Flygt jet aerators fit into any tank regardless of size or shape. Choose the Flygt pump capacity, number of mechanical ejectors and materials that match your requirements. Pumps can serve between one and three ejectors.

Erosion/corrosion-resistant operation
Greater durability can be achieved by choosing the stainless steel ejector assembly and Hard-Iron™ N-impeller over the standard galvanized steel ejector assembly and cast iron N-impeller.

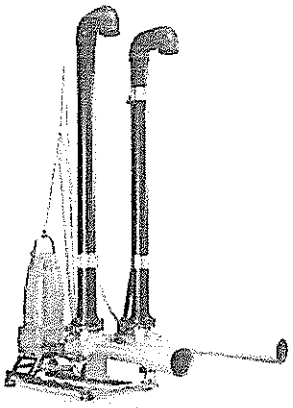

The Flygt jet aerator consists of air suction pipes, an N-pump, ejector housings and ejectors.

Performance curves

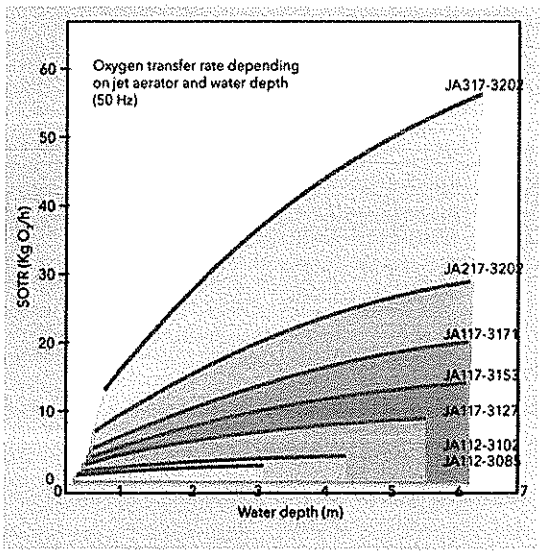

Working principle; The velocity of the water creates air suction which is mixed in the ejector and transferred into the wastewater tank.

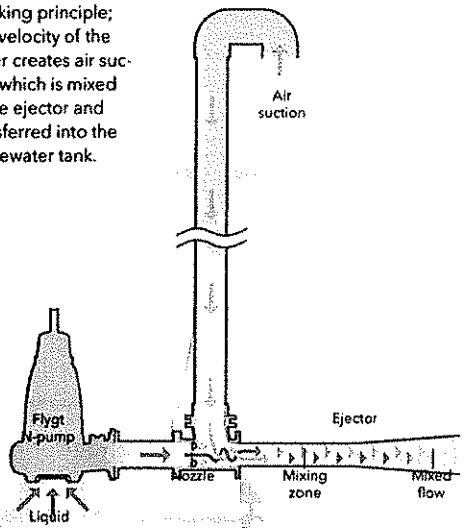

Technical data

Model	JA112	JA212	JA117	JA217	JA317	JA317	JA317
SOTR at 4m (13 ft) depth							
50Hz, kgO_2/h	1.5*	3.2	7.5	11	15	22	40
60Hz, kgO_2/h ($lbsO_2/h$)	2.2 (4.8)	3.3 (7.3)	7.8 (17)	12 (26)	17 (37)	30 (66)	43 (95)
Ejectors	1	1	1	1	1	2	3
Nozzle outlet diameter (mm)	55	55	95	95	95	95	95
Flygt N-pump	3085 MT	3102 MT	3127 MT	3153 MT	3171 MT	3202 MT	3202 LT
Rated power, kW (hp)							
50 Hz	2	3.1	5.9	9	15	22	37
60 Hz	2.2 (3)	3.7 (5)	7.5 (10)	11.2 (15)	18.6 (25)	34 (45)	45 (60)
Cooling jacket	–	–	–	•	•	•	•
Standard aeration efficiency (SAE)	‹---------- 0.5-1.2 kgO_2/kWh (0.8-2 $lbsO_2$ /hph) ----------›						

* *At 3m (10 ft) depth.*

03/12/18

Empowering system performance

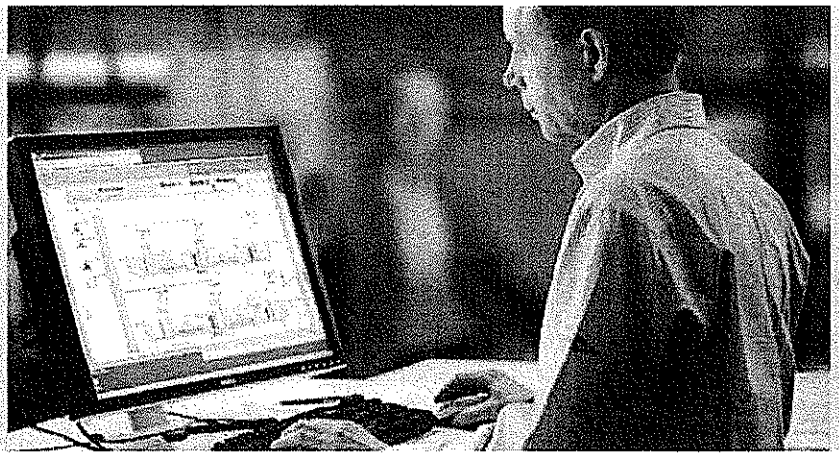

Take command of the performance of your aeration systems with our monitoring and control systems. To help you meet your responsibilities in a constantly changing environment, you can rely on us to put you in total control of your entire plant or plant subsystem/s.

Saving energy on a daily basis
The Flygt APX process controller automatically adapts the air supply to your oxygen requirements based on daily and seasonal variations. This drastically reduces power consumption and boosts energy savings by up to 40%. The information in our systems flows seamlessly to most existing third-party control system. So after installation, you can immediately begin saving more energy.

Total control, total performance
For full end-to-end control of your entire plant, combine the Flygt APX process controller with the Flygt AquaView SCADA system. Both are based on open standards, no special interfaces are required to communicate with most programmable logic controllers (PLCs) or SCADA systems. This makes continuous real-time monitoring of individual components possible. It also provides detailed data on events to identify trends and diagnose problems before they even occur. With total control, you can boost energy efficiency every step of the way and raise performance at your plant.

Total peace of mind
We understand that system reliability is of paramount importance. With us as your single reliable partner, you not only can improve control over your operations, but improve productivity and profitability. Managing your plant from any remote location is easy, thanks to web-based tools and online support. What's more, our control systems are flexible, scalable and future-proof and can accommodate additional equipment in virtually any treatment plant configuration.

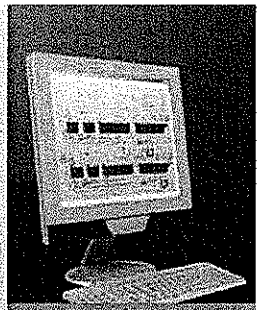

Flygt AquaView SCADA system

- Provides a complete plant overview
- Collects and stores data to identify trends and diagnose problems before they occur
- Provides extensive alarm handling

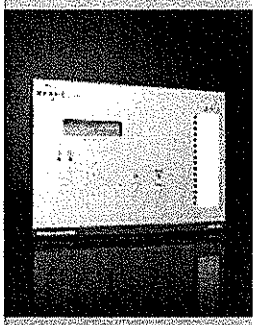

Flygt APX 700 process controller

- Distributes the required oxygen to tanks and grids
- Operates blowers at optimal efficiency
- Provides extensive alarm handling

03/12/18

Aeration expertise runs deep

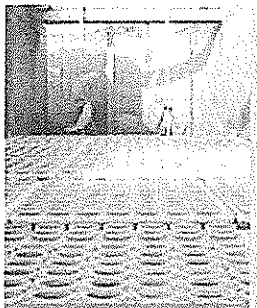

Combining aeration & mixing technologies

To deliver high oxygen transfer and mixing efficiencies with minimal energy consumption, you can rely on our engineers to share their knowledge about system design.

Comprehensive system design services

- System simulation utilizing CFD
- Engineering software development
- Advisory services
- System design assistance
- System specification assistance
- Oxygen transfer testing
- Model testing

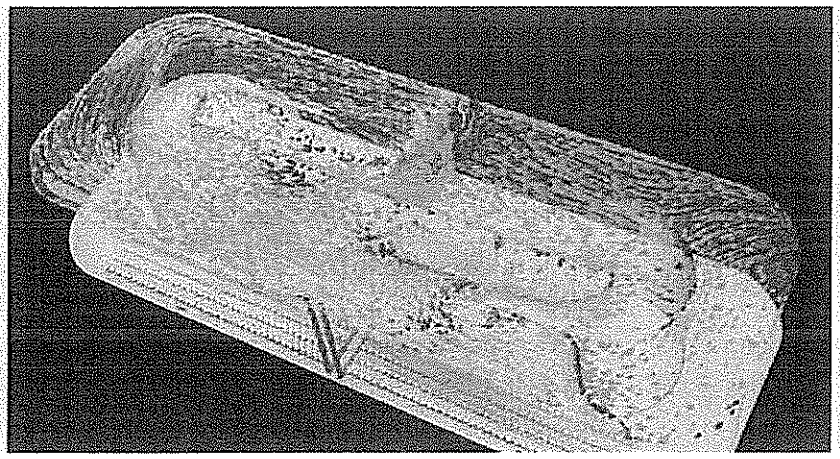

We are passionate about the design and execution of comprehensive aeration treatment solutions. We have knowledge and understanding of the aeration process to safeguard the wellbeing of your business and the environment.

Extensive systems engineering
Our competence in systems engineering runs deep. We can assist you every step of the way - from developing mixing and aeration specifications to shop testing. Through thorough aeration design analysis, we are able to achieve the highest possible oxygen transfer while using the least possible amount of energy.

Smart tools to analyze aeration design
Our engineers combine their experience and expertise with specially developed software programs and tools so that we can design new and existing aeration installations tailored to your requirements.

Computational fluid dynamics (CFD) programs enable our engineers to simulate your aeration operating conditions, determine how best to optimize flow turbulence in your tanks and minimize energy consumption.

We use system temperature and pressure calculations to determine the optimal conditional for every single component in your entire aeration system - from blower to grid.

Grid configuration is another area where we excel. We tailor your grid to meet your requirements for oxygen transfer.

Support all along the way
Customers worldwide have come to rely on us for comprehensive range of aeration system components and accessories, spare parts and support. Whatever your requirements, we support you all the way - from designing and commissioning to optimizing and maintaining your aeration systems.

03/12/18

Xylem |'zīləm|

1) The tissue in plants that brings water upward from the roots;
2) a leading global water technology company

We're 12,000 people unified in a common purpose: creating innovative solutions to meet our world's water needs. Developing new technologies that will improve the way water is used, conserved, and re-used in the future is central to our work. We move, treat, analyze, and return water to the environment, and we help people use water efficiently, in their homes, buildings, factories and farms. In more than 150 countries, we have strong, long-standing relationships with customers who know us for our powerful combination of leading product brands and applications expertise, backed by a legacy of innovation.

For more information on how Xylem can help you, go to **www.xyleminc.com**

FLYGT

SB004-460 • Sanitaire Aeration Products Brochure • 04/2012 • US

xylem
Let's Solve Water

Xylem, Inc.
14125 South Bridge Circle
Charlotte, NC 28273
Tel 704.409.9700
Fax 704.295.9080
www.xyleminc.com

Flygt is a trademark of Xylem Inc. or one of its subsidiaries
© 2012 Xylem, Inc. FEB 2012

03/12/18

sc1000 MULTI-PARAMETER UNIVERSAL CONTROLLER

Applications

- Drinking Water
- Wastewater
- Power
- Industrial Water

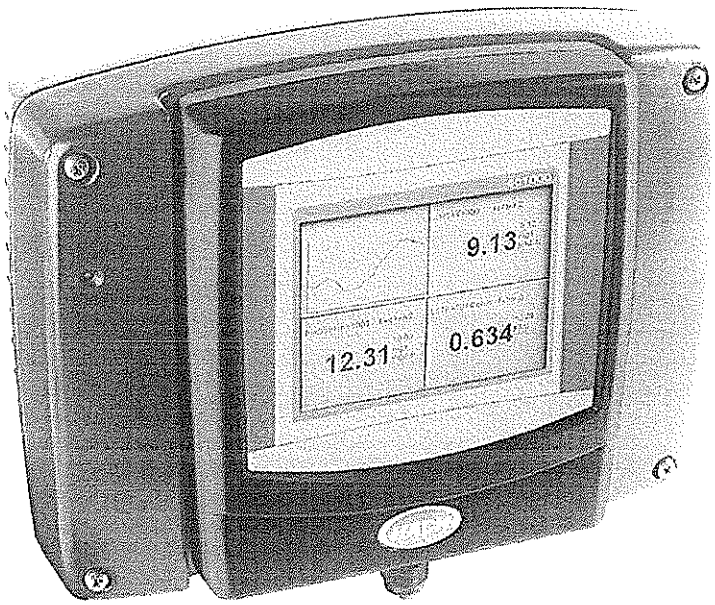

PROGNOSYS™ READY

A fully modular system consisting of a display module and one or more probe modules.

More Confidence in Your Instrument's Performance

Available exclusively on the sc1000, PROGNOSYS predictive diagnostics uses patented multivariable diagnostic software to read multiple inputs from your instrument and alert you to the instrument's overall performance. An easy-to-read dashboard provides instant indication of measurement reliability and service requirements.

Plug and Play Operation

There's no complicated wiring or set up procedures with the sc1000 controller. Plug any Hach digital sensor into a Probe Module and it's ready for use. No special ordering or software configuration is needed.

Communication Options to Fit Any Application Need

The sc1000 controller features state-of-the-art Modbus TCP/IP communications protocol for seamless integration into a network of devices that support TCP/IP sockets. Use a standard Ethernet cable or connect wirelessly using GSM/GPRS to communicate with your SCADA, PLC, or other network. The sc1000 also offers up to 12 analog outputs for measured values and up to 12 analog or digital values from non-digital sensors.

Expandable and Upgradable

The sc1000 Controller can adapt to your needs. Add or change probes without having to change the controller. Plus, with a single Display Module, additional Probe Modules and associated sensors can be added or removed depending on operational needs. Fully upgradable software ensures that this system will not be obsolete. Hach service plans are available.

Expandable and Upgradable

The Hach sc1000 Controller can adapt to your needs. Change probes without changing the controller. With a single Display Module, additional Probe Modules can be added or removed depending on operational needs. Fully upgradable software ensures that this system will not be obsolete. Hach service plans are available.

HACH®
Be Right™

03/12/18

Specifications*

Operating Temperature Range	-20 to 55 °C (-4 to 131 °F), 0 to 95% relative humidity, non-condensing
Storage Conditions	-20 to 70 °C (-4 to 158 °F), 0 to 95% relative humidity, non-condensing
Power Requirements (Voltage)	100 - 240 V AC, 24 V DC
Power Requirements (Hz)	50/60 Hz
Display	1/4 inch VGA graphical backlit TFT color Glas/Glas-Touch screen, high resistance, 320 x 240 pixels
Display Viewing Area	11.4 x 8.6 cm (4.5 x 3.4 in)
Alarm	Low alarm point, low alarm point deadband, high alarm point, high alarm point deadband, off delay, and on delay
Relays	Up to four SPDT, user-configurable contacts rated 100 to 230 VAC, 5 Amp resistive maximum per probe module. Additional relays are available with additional probe modules.
Inputs	Up to 12 analog 0-20 mA, maximum impedance 500 Ohms per probe module. Additional analog inputs are available with additional probe modules.
Outputs	Up to 12 analog 0/4-20 mA, maximum impedance 500 Ohms per probe module. Additional analog outputs with additional probe modules. Optional digital communcations via Modbus® (RS485) and Profibus® DP/V1.
Analogue Output Functional Mode	PID, high/low phasing, setpoint, deadband, overfeed timer, off delay, on delay
Communication	Modbus® (RS485): Advanced communications/networking with PLC or SCADA system directly from analyzer Profibus® DP/V1 (certified) GSM/GPRS Quad-band cellular module (FCC and IC approved, EU and US only) Ethernet service port, RJ45, 10 MB/s
Mounting Configurations	Surface, panel, and pipe (horizontal and vertical) with optional sun shield
Enclosure Rating	IP65
Material Enclosures	ABS (display module) and metal (probe module) enclosure with corrosion resistant finish
Dimensions Metric (H x W X D)	150 mm x 315 mm x 250 mm
Certifications	North American Certifications: cTUVus to UL 61010A-1 and CSA C22.2 No. 1010.1 FCC ID QIPMC56 / IC ID 267W-MC56 European Certifications: CE per 73/23/EEC and 89/336/EEC TUV-GS to EN 61010-1 EN 61326 Amd's 1 & 2
Weight	Approximately 14.33 lbs. (6.5 kg) depending on configuration
Warranty	1 year

Subject to change without notice.

03/12/18

Dimensions

The sc1000 controller unit can be installed on a pole, wall, or a floor stand.
No tools are needed to connect the controller unit to any Hach digital sensor.

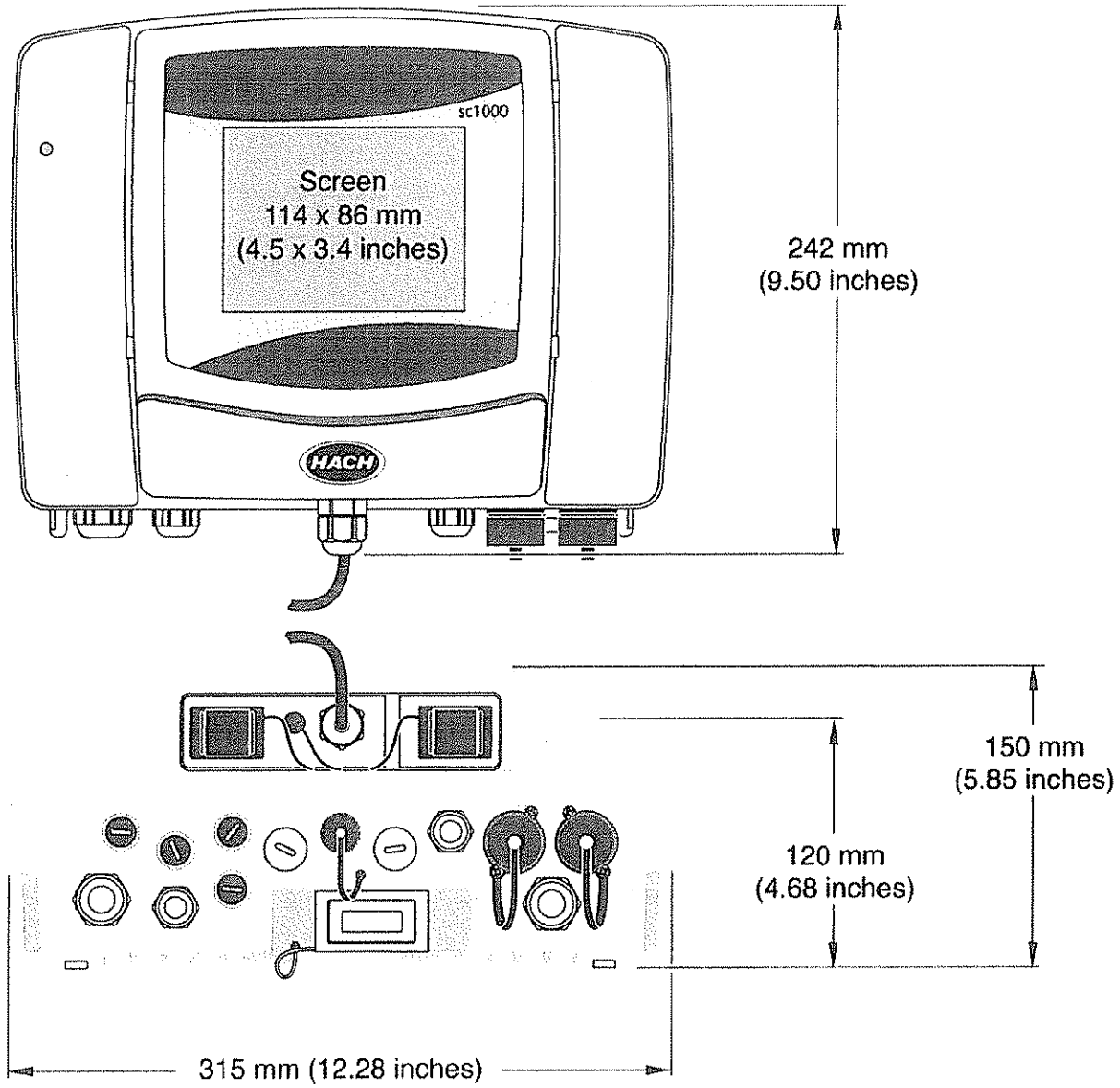

03/12/18

Ordering Information

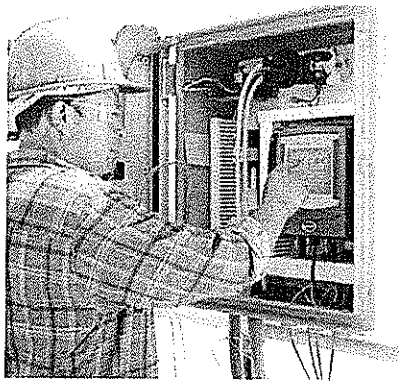

sc1000 Display Modules

LXV402.99.00002	sc1000 Display Module
LXV402.99.01002	sc1000 Display Module with GSM/GPRS Protocol
LXV402.99.10002	sc1000 Display Module with Modbus® TCP/IP Protocol
LXV402.99.12002	sc1000 Display Module with Modbus® TCP/IP and GSM/GPRS Protocols

sc1000 Probe Modules

LXV400.99.1R572	sc1000 Probe Module, 4 sensors, 4 mA Out, 4 mA In, 4 Relays, 110-230V
LXV400.99.1B572	sc1000 Probe Module, 4 sensors, 4 mA Out, 4 mA In, 4 Relays, Modbus® RS485, 110-230V
LXV400.99.1F572	sc1000 Probe Module, 4 sensors, 4 mA Out, 4 mA In, 4 Relays, Profibus® DP, 110-230V
LXV400.99.1R582	sc1000 Probe Module, 6 sensors, 4 mA Out, 4 mA In, 4 Relays, 110-230V
LXV400.99.1H082	sc1000 Probe Module, 6 sensors, Prognosys Software, Modbus® RS485, 110-230V
LXV400.99.1G082	sc1000 Probe Module, 6 Sensors, Prognosys Software, 110-230V

Note: Additional Probe Module configurations are available. Please contact Hach Technical Support or your Hach representative.

Network and Communication Cards

YAB021	sc1000 Internal Modbus® RS485 Card
YAB020	sc1000 Internal Profibus® Card
YAB076	sc1000 Internal Relay Card
YAB018	sc1000 Internal 0/4-20 mA Analog/Digital Inputs Card
YAB019	sc1000 Internal 0/4-20 mA Analog/Digital Outputs Card

Accessories

6169900	sc1000 Panel Mount Kit
LZX958	sc1000 Sun Shield
LZY598	Modbus® TCP/IP License Kit for Field Upgrade (Display Module serial number required when ordering)
LZY488	sc1000 Bus Cable for Flexible Installations (Order per foot)
LZY489	sc1000 Bus Cable for Fixed Installations (Order per foot)
5448800	North American Power Cord Kit with Strain Relief, 125V
5448900	European Power Cord Kit with Strain Relief, 230V

HACH COMPANY World Headquarters: Loveland, Colorado USA

United States: 800-227-4224 tel 970-669-2932 fax orders@hach.com
Outside United States: 970-669-3050 tel 970-461-3939 fax int@hach.com
hach.com

LIT2403 Rev 3
F14 Printed in U.S.A.
©Hach Company, 2014. All rights reserved.
In the interest of improving and updating its equipment, Hach Company reserves the right to alter specifications to equipment at any time.

HACH® Be Right™

03/12/18

DISSOLVED OXYGEN: HACH LDO® PROBE, MODEL 2

Applications

- Wastewater
- Industrial Water
- Drinking Water

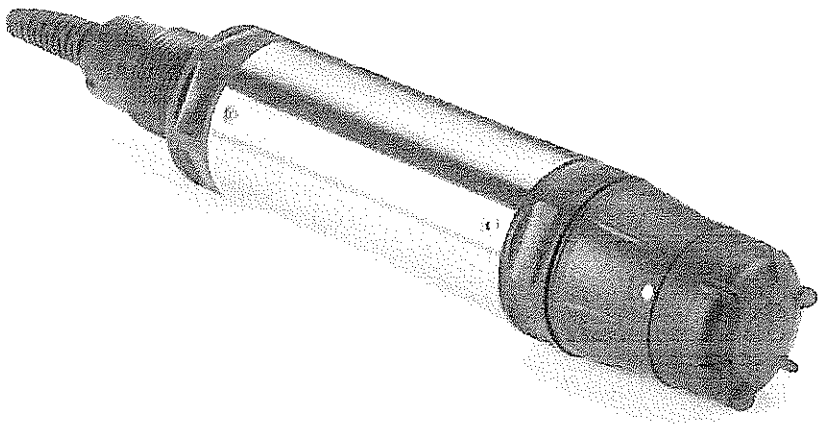

Take "No" for an answer when measuring dissolved oxygen with the next generation Hach LDO probe.

No Calibration Required

The Hach LDO probe is ready to work in your process right out of the box with no calibration required for the entire 2 year life of the sensor cap.

No Membranes to Replace

There is virtually no maintenance with Hach's breakthrough luminescent technology. There are no membranes to replace, no electrolyte solution to replenish, and no anode or cathode to clean.

No Missed Cleaning Cycles

Customizable service indicators trigger a service message so that a cleaning cycle is never missed.

No Drift

A cutting-edge, 3D calibration procedure at the factory makes oxygen measurement with the Hach LDO probe more accurate than ever before.

No Complications

A robust new design gives the Hach LDO enhanced durability and reduced size for easier handling.

HACH®
Be Right™

03/12/18

Specifications*

Range	0 to 20.00 ppm
	0 to 20.0 mg/L (or ppm)
	0 to 200 % air saturation
Accuracy	± 0.05 ppm below 1 ppm
	± 0.1 ppm below 5 ppm
	± 0.2 ppm above 5 ppm
Response Time	T_{95} < 60 s
	T_{90} < 40 s
Resolution	0.01 ppm DO 0.1% saturation
Repeatability	± 0.1 (mg/L) ppm
Flow Rate	None required
Sensor Immersion Depth	Down to 345 kPa 345 kPa (50 psi), maximum; accuracy may not be maintained at this depth
Transmission Distance	1000 m (3280 ft.) maximum when used with a termination box
Cable Length	10 m (options with 30m, 60m, 100m)
Dimensions (D x L)	1.9 in x 10 in (48.25 mm x 254 mm)
Weight	2.2 lbs. (1 kg), probe only

**Subject to change without notice.*

Principle of Operation

The HACH LDO sensor is coated with a luminescent material. Blue light from an LED is transmitted to the sensor surface. The blue light excites the luminescent material. As the material relaxes it emits red light. The time it takes for the red light to be emitted is measured. Between the flashes of blue light, a red LED is flashed on the sensor and used as an internal reference.

Increased oxygen in the sample decreases the time it takes for the red light to be emitted. The time measurements correlate to the oxygen concentration.

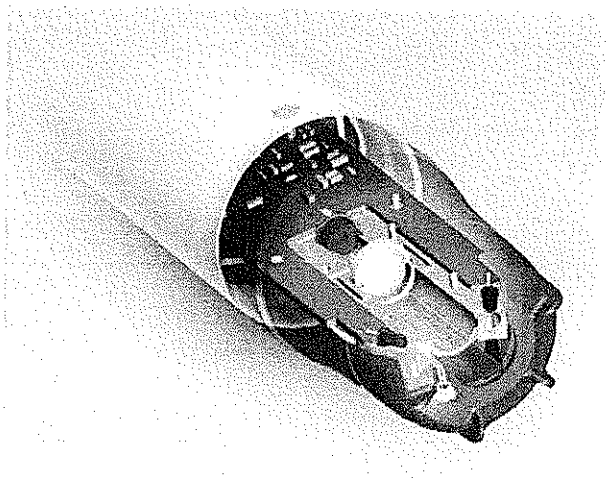

03/12/18

Dimensions

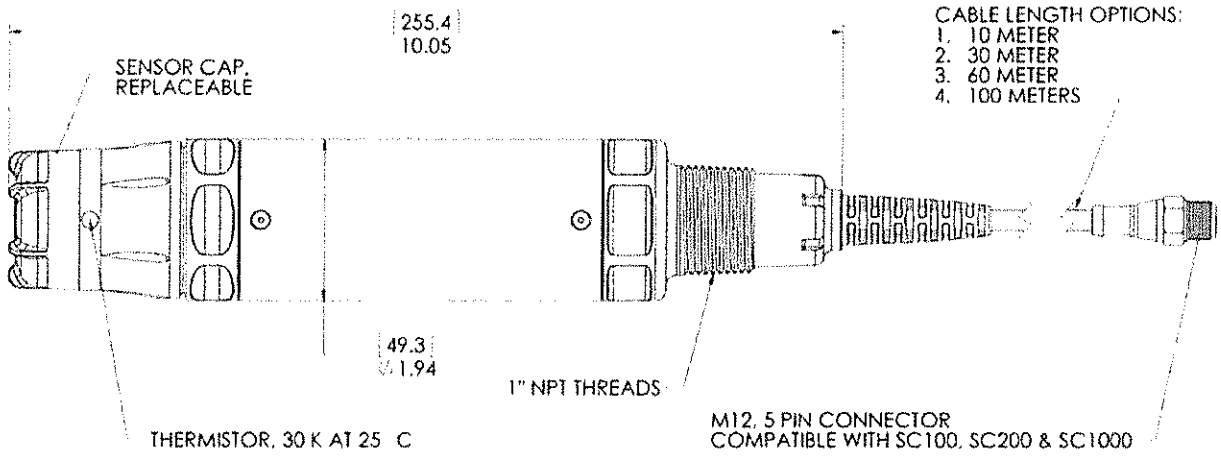

Installation / Mounting

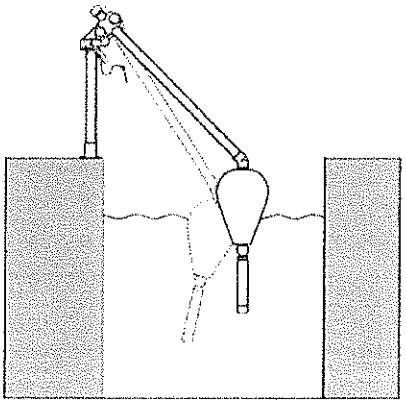

Float Mount Kit

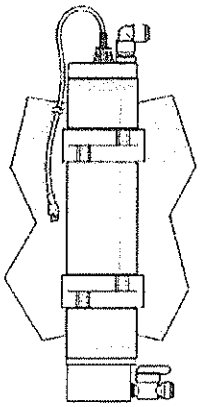

Flow Cell

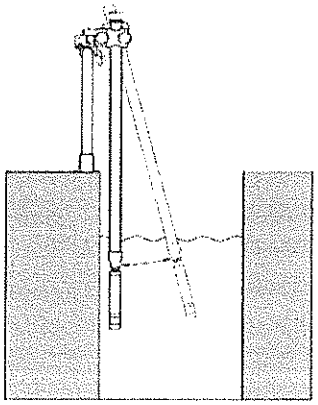

Pole Mount Kit

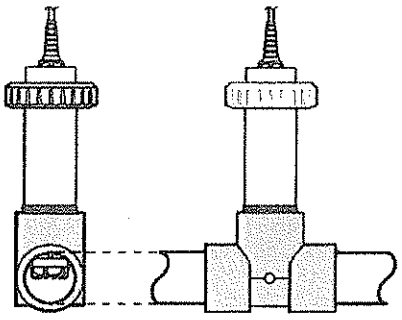

Union Mount Kit

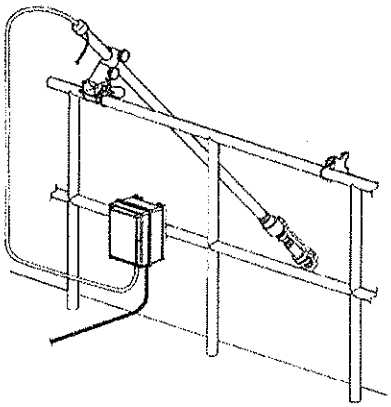

Air Blast Cleaning System

03/12/18

Ordering Information

9020000	Hach LDO Model 2 Probe
9020000-UPGRADE	LDO Probe, Mounting Conversion Adapter
9020000-SC200	LDO Probe, Mounting Conversion Adapter, sc200 controller with 2 channels

Accessories

5867000	Digital Termination Box
5796000	Digital Extension Cable, 7.7 m (25 ft.)
5796100	Digital Extension Cable, 15 m (50 ft.)
5796200	Digital Extension Cable, 31 m (100 ft.)
6860000	High Output Air Blast Cleaning System, 115 Vac
6860100	High Output Air Blast Cleaning System, 230 Vac
9253500	Air Blast Hardware Components

Replacement Parts

9021100	LDO Model 2 Sensor Cap Replacement Kit

Mounting Kits

9253000	Pole Mount Kit, PVC
9253100	Ball Float Mount Kit, PVC
9257000	Union Mount Kit, PVC
9253400	Mounting Conversion Adapter, LDO Model 1 to LDO Model 2
7300800	1 NPT sc Sensors Flow Cell

Controllers

sc200 Digital Controllers

LXV404.99.00552	sc200 controller, 2 channel, digital
LXV404.99.00542	sc200 controller, 2 channel, digital & mA input
LXV404.99.00502	sc200 controller, 1 channel, digital
LXV404.99.00512	sc200 controller, 2 channel, digital & pH/DO
LXV404.99.00522	sc200 controller, 2 channel, digital & Conductivity
LXV404.99.00532	sc200 controller, 2 channel, digital & Flow

sc1000 Digital Controllers

LXV402.99.00002	sc1000 Display Module
LXV400.99.1R572	sc1000 Probe Module, 4 sensors, 4 mA Out, 4 mA In, 4 Relays, 110-230V
LXV400.99.1B572	sc1000 Probe Module, 4 sensors, 4 mA Out, 4 mA In, 4 Relays, Modbus RS485, 110-230V
LXV400.99.1F572	sc1000 Probe Module, 4 sensors, 4 mA Out, 4 mA In, 4 Relays, PROFIBUS DP, 110-230V
LXV400.99.1R582	sc1000 Probe Module, 6 sensors, 4 mA Out, 4 mA In, 4 Relays, 110-230V

HACH COMPANY World Headquarters: Loveland, Colorado USA

United States 800-227-4224 tel 970-669-2932 fax orders@hach.com
Outside United States 970-669-3050 tel 970-461-3939 fax int@hach.com
hach.com

LIT2455 Rev 3
A14 Printed in U.S.A.
©Hach Company, 2014. All rights reserved.
In the interest of improving and updating its equipment, Hach Company reserves the right to alter specifications to equipment at any time.

HACH® Be Right™

03/12/18

Certificate

Standard	**ISO 9001:2008**
Certificate Registr. No	01 100 4412

Certificate Holder:

HACH LANGE GmbH
Königsweg 10 • D - 14163 Berlin

including the locations:

HACH LANGE GmbH
Willstätterstraße 10 • D - 40549 Düsseldorf

Scope:

development, manufacture, sales and service
of measuring systems for water analysis
inclusively retraction of used reagents and
their environmentally responsible disposal

Proof has been furnished by means of an audit that the requirements of ISO 9001:2008 are met

Validity

The certificate is valid from 2016-02-22 until 2018-09-14.
First certification 1995

2016-02-18

TÜV Rheinland Cert GmbH
Am Grauen Stein · 51105 Köln

www.tuv.com

DAkkS

TÜVRheinland

03/12/18

SOLITAX sc TURBIDITY & SUSPENDED SOLIDS SENSORS

Applications

- Drinking water
- Wastewater
- Beverage
- Industrial water
- Power

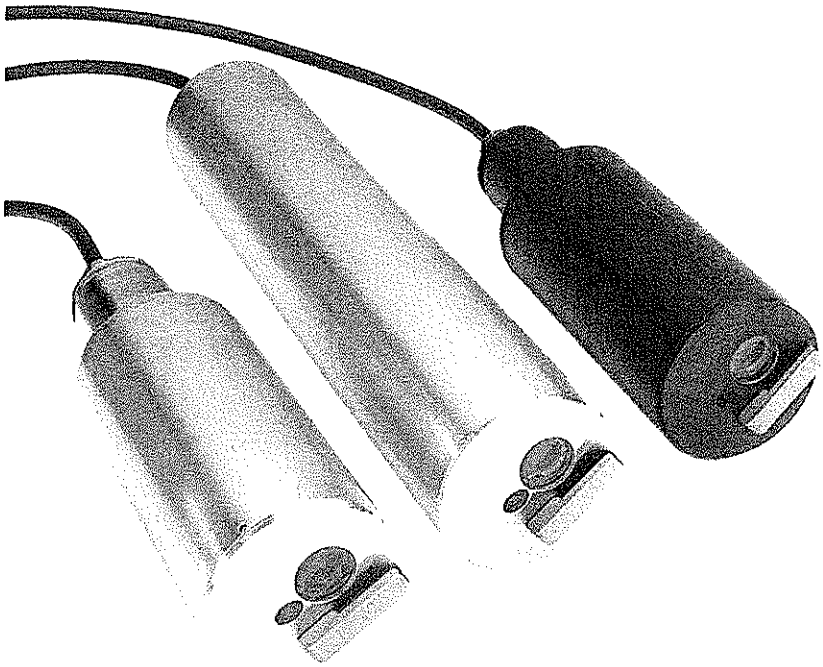

PROGNOSYS® READY

Accurate, colour-independent suspended solids and turbidity measurements

Greater accuracy, less maintenance

Hach®'s Solitax sc sensors provide accurate, colour-independent measurement of turbidity and suspended solids in drinking water, wastewater and industrial process applications. A self-cleaning device prevents biological growth and interference of gas bubbles. This system's reliable performance and full data communication capability help improve process control and reduce treatment costs associated with polymer use, digester volume, and sludge handling.

Excellent correlation to laboratory analysis

Solitax sc sensors show an exceptional correlation to laboratory analysis. On-line measurement not only saves time on manual analysis, but also provides critical real-time measurements that can be used to operate the plant more efficiently.

Fully serviceable sensors

Conventional turbidity and suspended solids sensors are potted and are discarded when they no longer function. Solitax sc sensors are fully serviceable, which often doubles the useful life of the sensor.

Easy one-point calibration

Factory calibrated in conformity with DIN EN ISO 7027 for long-term calibration stability. Calibration is easy with a simple correction factor procedure.

Multi-channel, multi-parameter system

Multiple Solitax sc sensors can be installed on one Hach SC Controller. The same controller can also accommodate any combination of parameters. All of Hach's model sc sensors are "plug and play" with no complicated wiring or set-up procedure necessary.

HACH®
Be Right™

03/12/18

Technical Data*

	For insertion in pipes		For immersion in open tanks		
Model	Solitax inline sc	Solitax highline sc	Solitax t-line sc	Solitax ts-line sc	Solitax hs-line sc
Parameters	Suspended Solids, Turbidity	High Range Suspended Solids, Turbidity	Turbidity	Suspended Solids, Turbidity	High Range Suspended Solids, Turbidity
Measuring range turbidity	0.001 - 4000 NTU	0.001 - 4000 NTU	0.001 - 4000 NTU	0.001 - 4000 NTU	0.001 - 4000 NTU
Measuring range TSS	0.001 - 50 g/L	0.001 - 500 g/L (the upper range is dependent on the sample property)	—	0.001 - 50 g/L	0.001 - 500 g/L (the upper range is dependent on the sample property)
Units	Turbidity: User selectable - NTU, FNU, or TE/F Suspended Solids: User selectable - g/L, mg/L, ppm, or % solids				
Accuracy	Turbidity up to 1000 NTU: without calibration < 5 % of the measured value ±0.01 NTU with calibration < 1 % of the measured value ±0.01 NTU				
Repeatability	TSS content: < 3 %				
	Turbidity: < 1 %				
Response time	1 – 300 s adjustable				
Calibration method	Turbidity: Formazin or StablCal Standard (at 800 NTU). Suspended Solids: Sample specific, based on gravimetric TSS analysis with a correction factor procedure.				
Certifications	CE				
Flow	Max. 3 m/s (the presence of air bubbles affects the measurement)				
Operating temperature range	0 - 40 °C				
Pressure range	Stainless steel insertion sensor: 6 bar or 60 m		PVC: 1 bar or 10 m	Stainless steel immersion sensor: 6 bar or 60 m PVC: 1 bar or 10 m	
Material	Optics carrier and sleeve: stainless steel 1.4571 or black PVC Wiper arm: stainless steel 1.4581; Wiper blade: silicone (standard) Optional: Viton (LZX578); Wiper shaft: stainless steel 1.4571 Threaded cable fitting: stainless steel 1.4305 or white PVC				
Weight	Immersion: Stainless steel: 1.38 kg; PVC: 0.52 kg Insertion: Stainless steel: 2.4 kg				
Cable length	10 m (optional extension cables available)				

Subject to change without notice.

03/12/18

Principle of Operation

Solitax sc ts-line sensor with dual-beam optics and added backscatter detector

- Dual infrared light beams. LED light source transmits light at 45° to sensor face.
- Nephelometric photoreceptors detect light at 90° to the transmitted light beam.
- Backscatter photoreceptor (included on all models except the Solitax sc t-line) detects light at 140° to the transmitted light beam to measure suspended solids in heavily loaded sample streams.
- Self-cleaning wiper, optional.
- T-line probes measure turbidity only. TS, HS, inline, and highline sensors measure either turbidity or suspended solids.

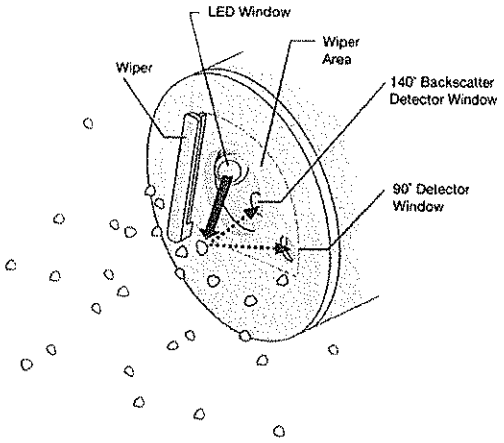

Dimensions

Hach Solitax sc sensors can be fixed to the rim of the tank for immersion applications or inserted directly through the sidewall of a pipeline for insertion applications. A variety of installation kits are available.

Solitax sc Insertion Probe

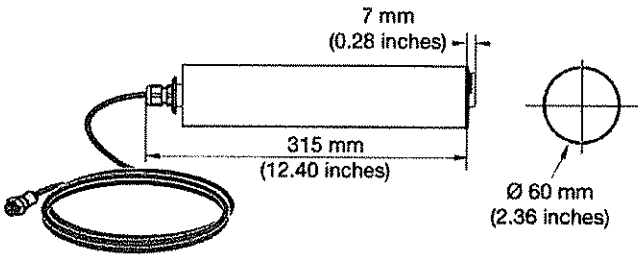

Solitax sc Immersion Probe

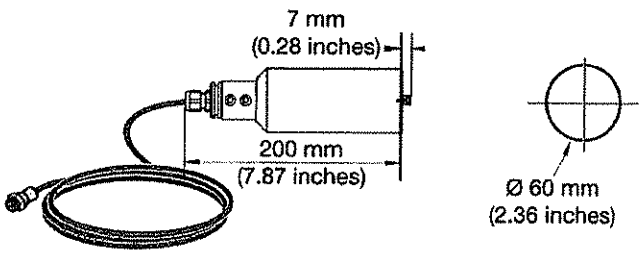

Installation/Mounting

Installation for mounting Solitax sc for immersion in open tanks. (Stainless steel pole mount kit, Prod. No. LZY714.99.53120)

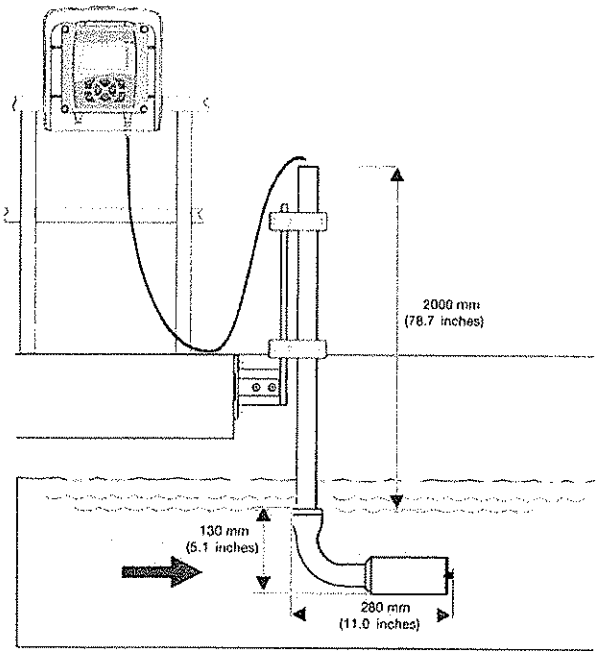

Fixture with ball valve for mounting Solitax sc models inline and highline sensors in pipes., minimum pipe size 100 mm (4-in.) (Prod. No. LZX337, max pressure 6 bar; Prod. No. LZX936, max. pressure 1 bar.

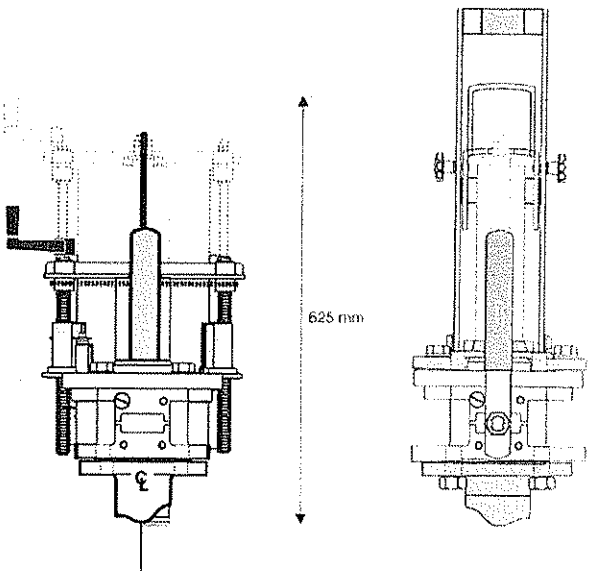

03/12/18

Order Information

Solitax sc Probes

Immersion Probes

LXV423.99.10000	Solitax t-line sc Turbidity immersion probe, 0.001 - 4000 NTU, with wiper, PVC
LXV423.99.12000	Solitax t-line sc Turbidity immersion probe, 0.001 - 4000 NTU, w/o wiper, PVC
LXV423.99.10100	Solitax ts-line sc Turbidity (0.001-4000 NTU) and Suspended Solids (0.001-50 g/L) immersion probe, with wiper, PVC
LXV423.99.12100	Solitax ts-line sc Turbidity (0.001-4000 NTU) and Suspended Solids (0.001-50 g/L) immersion probe, w/o wiper, PVC
LXV423.99.00100	Solitax ts-line sc Turbidity (0.001-4000 NTU) and Suspended Solids (0.001-50 g/L) immersion probe, with wiper, stainless steel
LXV423.99.02100	Solitax ts-line sc Turbidity (0.001-4000 NTU) and Suspended Solids (0.001-50 g/L) immersion probe, w/o wiper, stainless steel
LXV423.99.10200	Solitax hs-line sc Turbidity (0.001-4000 NTU) and Suspended Solids (0.001-500 g/L) immersion probe, with wiper, PVC
LXV423.99.12200	Solitax hs-line sc Turbidity (0.001-4000 NTU) and Suspended Solids (0.001-500 g/L) immersion probe, w/o wiper, PVC
LXV423.99.00200	Solitax hs-line sc Turbidity (0.001-4000 NTU) and Suspended Solids (0.001-500 g/L) immersion probe, with wiper, stainless steel
LXV423.99.02200	Solitax hs-line sc Turbidity (0.001-4000 NTU) and Suspended Solids (0.001-500 g/L) immersion probe, w/o wiper, stainless steel

Insertion Probes

LXV424.99.00100	Solitax inline sc Turbidity (0.001-4000 NTU) and Suspended Solids (0.001-50 g/L) built-in probe, with wiper, stainless steel
LXV424.99.02100	Solitax inline sc Turbidity (0.001-4000 NTU) and Suspended Solids (0.001-50 g/L) built-in probe, w/o wiper, stainless steel
LXV424.99.00200	Solitax highline sc Turbidity (0.001-4000 NTU) and Suspended Solids (0.001-500 g/L) built-in probe, with wiper, stainless steel
LXV424.99.02200	Solitax highline sc Turbidity (0.001-4000 NTU) and Suspended Solids (0.001-500 g/L) built-in probe, w/o wiper, stainless steel

Installation Accessories

LZY714.99.53120	Stainless Steel pole mount kit for Solitax t-line, ts-line, and hs-line sc immersion sensors, including 10 cm base and 2 m pole with sensor adapter
LZX337	Stainless steel ball valve safety armature/extraction fitting for Solitax sc inline and highline probes, maximum operating pressure 6 bar
LZX936	Stainless steel ball valve armature, maximum operation pressure 1 bar
LZX660	Non-coped stainless steel welding flange for insertion kit
LZX661	Non-coped carbon steel welding flange for insertion kit

Be certain in your measurements with a first class Service Partner. Be confident with Hach Service.

By having regular on-site preventative maintenance and calibration, you maximise your measurement reliability and instrument uptime. Hach Service Programs give you full assurance that your instruments stay in compliance, and you stay within your budget.

Start-Up:
Commissioning will ensure you get the best performance from your instrumentation from the first day you use it.

Service Agreements:
Hach offers a wide range of service agreements that can be tailored to you to help maximise your measurement reliability and instrument uptime.

Contact us to get a service offering designed for you.

DOC053.52.35118.Dec16

HACH® Be Right™

03/12/18

5.5 FINAL SETTLING TANK

3/12/18

KARKANIAS-ENVIRONMENTAL TECHNOLOGY S.A.

Industrial Area of Larisa - T.B. 3053, P.C. 41004 Larisa
Tel +302410541386 Fax +302410541354

Circular Sedimentation tank

EQUIPMENT

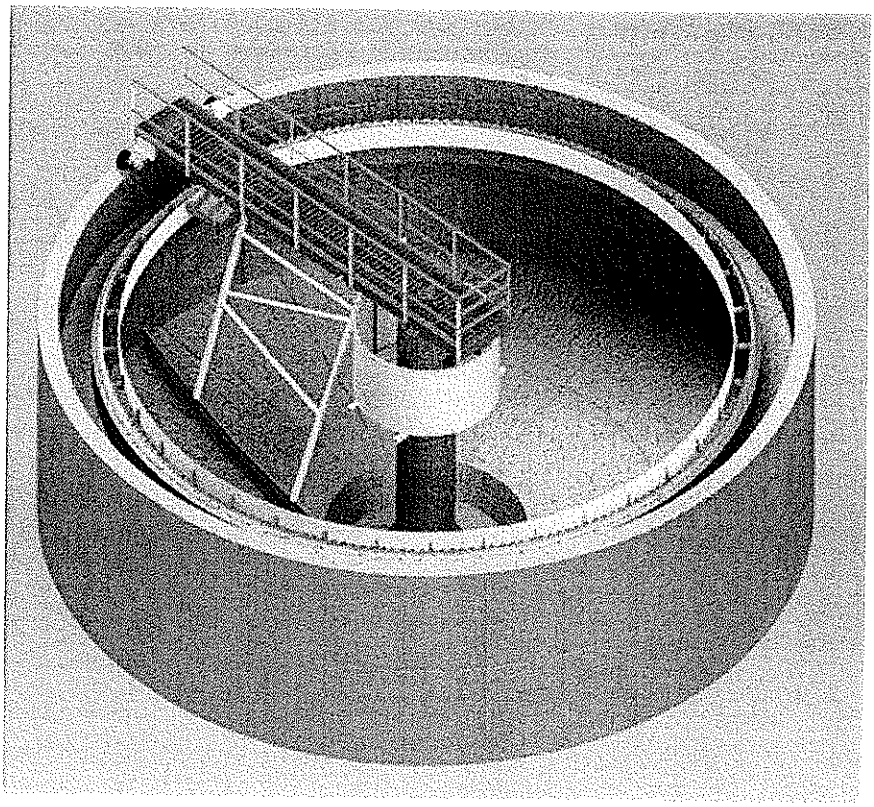

The equipment is classified as follows:
-Protection provided against electric shock: Class II
-Protection provided against the intrusion of solid objects, dust, and water: IP44

The scraper bridge is manufactured according to the following instructions and standards:
- EN 292-1: Safety of machinery - Basic concepts, general principles for design. Basic terminology, methodology
- EN 292-2: Safety of machinery - Basic concepts, general principles for design. Technical principles and specifications
- EN 60204-1: Safety of machinery - Electrical equipment of machines. General requirements

3/12/18

Prospect

KARKANIAS-ENVIRONMENTAL TECHNOLOGY S.A.

Industrial Area of Larisa - T.B. 3053, P.C. 41004 Larisa
Tel. +302410541386 Fax. +302410541354

SPECIFICATIONS of SCRAPPER BRIDGE

Type	: ROTATING / DK05
Bridge Length	: 8,50 m
Walkway Width	: 0,80 m

Gear Motor

Manufacturer	: BONFIGLIOLI RIDUTTORI
Type of reducer	: MVF44_86FC_700
Type of electric motor	: P71 BN71B B4
Motor Power	: 0.37 KW, 400 V, 50 Hz, class F
Torque	: 474 Nm
Speed	: 2 rpm^{-1}

Power Transmission

Directly to the gearbox

TECHNICAL DESCRIPTION

The rotating half bridge scraper is designed to remove settled sludge and scum from circular settlement tanks. The equipment in a tank comprises a galvanized fabricated bridge structure of channel or universal beam sections complete with a galvanized chequer plate walkway and suitable handrails. The scraper bridge is constituted also from the central pivot, a rotation unit, the bottom scraper, the surface scraper with scum box and the central deflecting hood while additional equipment is offered which consists of scum board and weir. All the emerged parts of the structure are made of hot-dip galvanized carbon steel S235JR and the immersed parts of stainless steel type AISI 304L.

Bridge structure

The bridge frame is a frame structure made from standard open section beams. The designation of the Chanel profiles depends on the dimensions of the bridge. Its walkway flooring consists of galvanized chequer plate while double-row tubular handrailing of 1m height is supplied.

Central pivot

The scraper bridge is supplied with a central heavy duty bearing unit that is adapted to the tank's center part. This unit is suitable to bear all the loads (axial, radial and torque) safely and will not be affected from the level differences of the peripheral wall. Slip ring collector for supplying electricity to the motor is included.

3/12/18

Prospect

The central support of the tank can be made of either of reinforced concrete or of stainless steel beam (in case of small diameter tanks).

Drive unit

The drive unit is located at the outer end of the bridge and consists of a motor reducer and two wheels, one driving wheel and one driven wheel. The motor reducer is placed on the driving wheel in order to achieve the bridge motion. The gear motor is suitable for continuous operation in outdoor installation (weatherproof). The wheels are manufactured from cast iron and wear-resistant rubber, supported by ball bearings.

Bottom scraper

A series of bottom scraper blades are attached on the bridge by vertical tubular supports and remove the settled sludge from the tank floor. The scrapers are arranged to form a continuous volute (spiral) pattern to ensure that sludge is directed towards a central hopper in the tank floor. The angle of the spiral is so calculated, to ensure optimal scanning of the sludge without dead spots in the center of the tank.

Surface scraper with scum box

Surface scraper is also located under the bridge at the water level of the tank and moves the floating scum towards the periphery where is located the scum box.

Energy dissipating well

The energy dissipating well made of stainless steel intends to calm the water, distributing it evenly throughout the enclosure.

Scum board and weir

The scum board is made of stainless steel and prevents the escape of floating scum in the weir. The perimeter weir is a triangular V-notch weir and is also made of stainless steel sheet.

3/12/18

Prospect

KARKANIAS-ENVIRONMENTAL TECHNOLOGY S.A.

Industrial Area of Larisa – T.B. 3053, P.C. 41004 Larisa
Tel. +302410541386 Fax. +302410541354

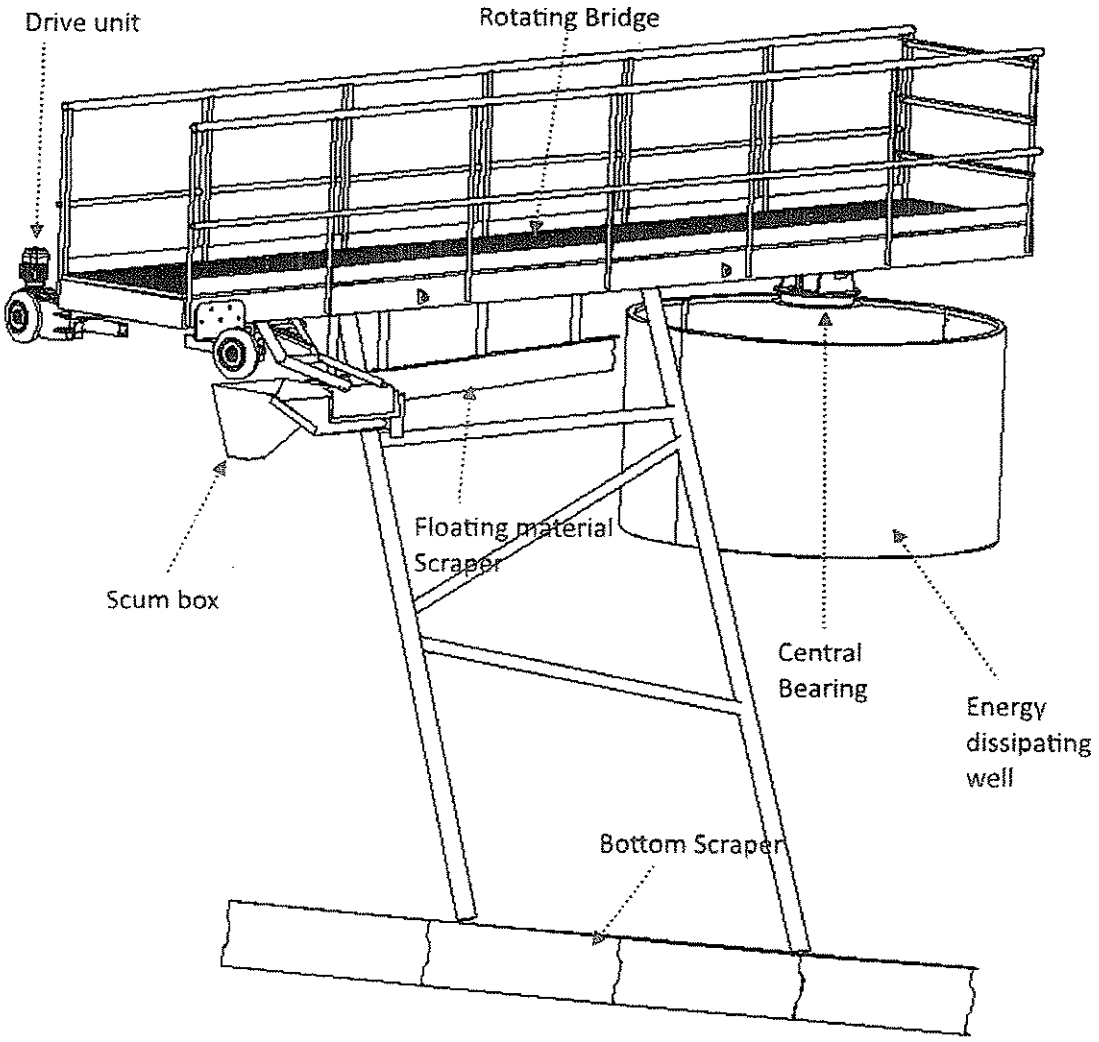

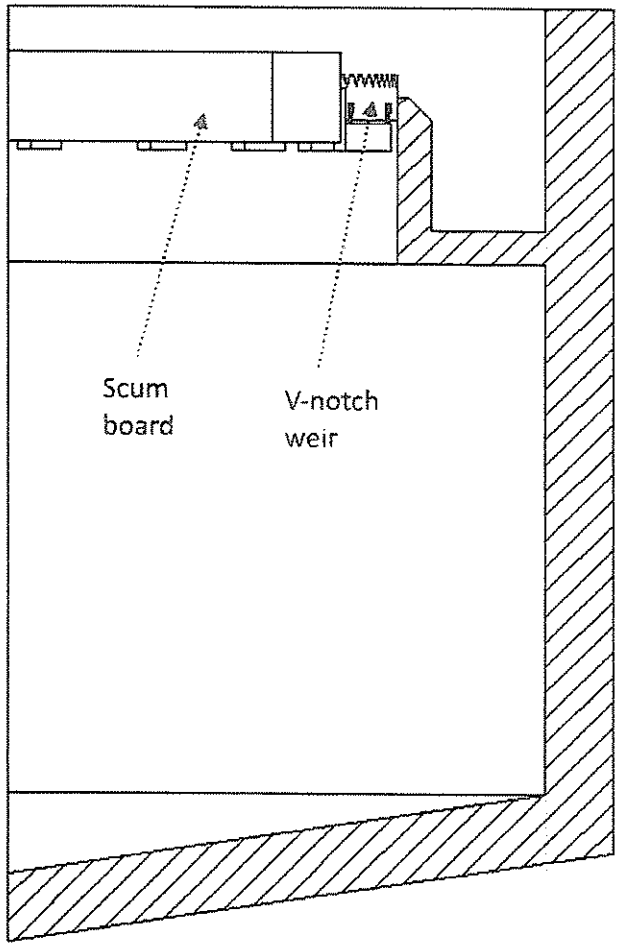

3/12/18

KARKANIAS-ENVIRONMENTAL TECHNOLOGY S.A.

Industrial Area of Larisa – T.B. 3053, P.C. 41004 Larisa
Tel. +302410541386 Fax. +302410541354

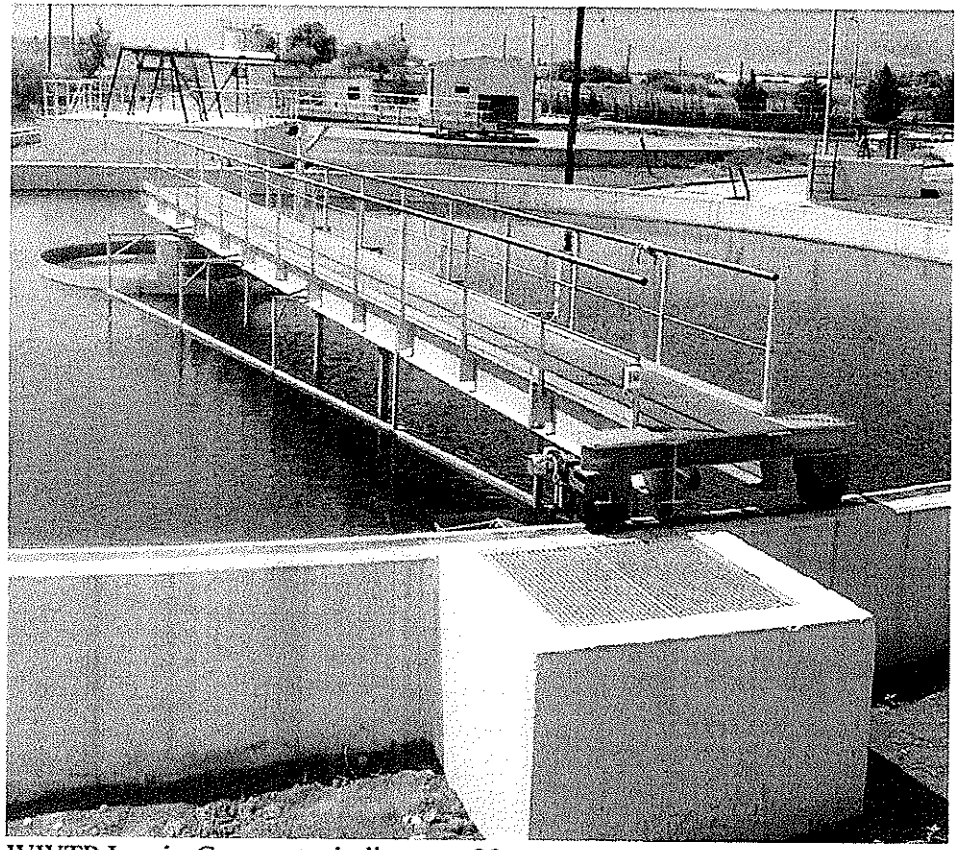

WWTP Lamia-Greece, tank diameter 30 m

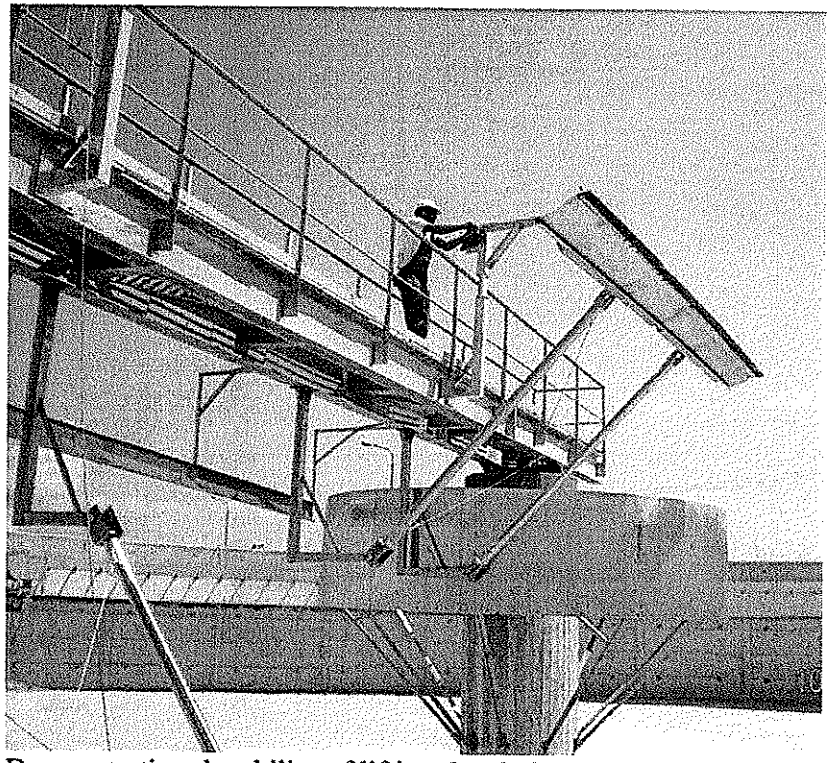

Demonstrating the ability of lifting the sludge scraper

3/12/18

Prospect

KARKANIAS-ENVIRONMENTAL TECHNOLOGY S.A.

Industrial Area of Larisa – T.B. 3053, P.C. 41004 Larisa
Tel. +302410541386 Fax. +302410541354

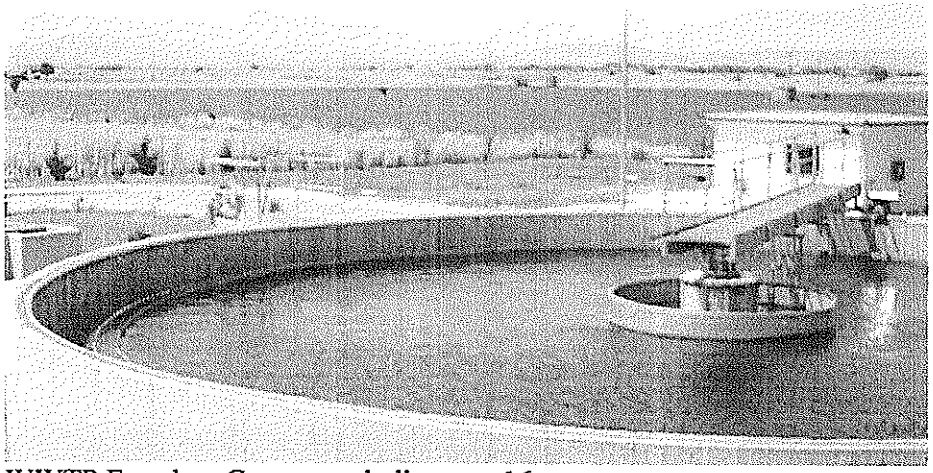

WWTP Farsala – Greece, tank diameter 16 m

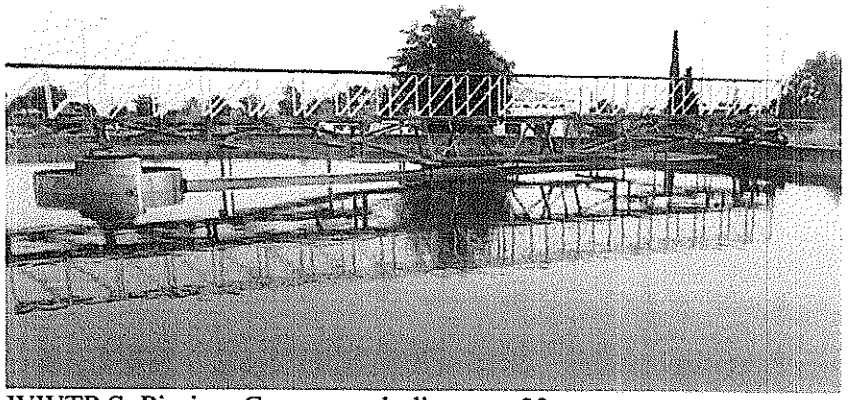

WWTP S. Pieria – Greece, tank diameter 32 m

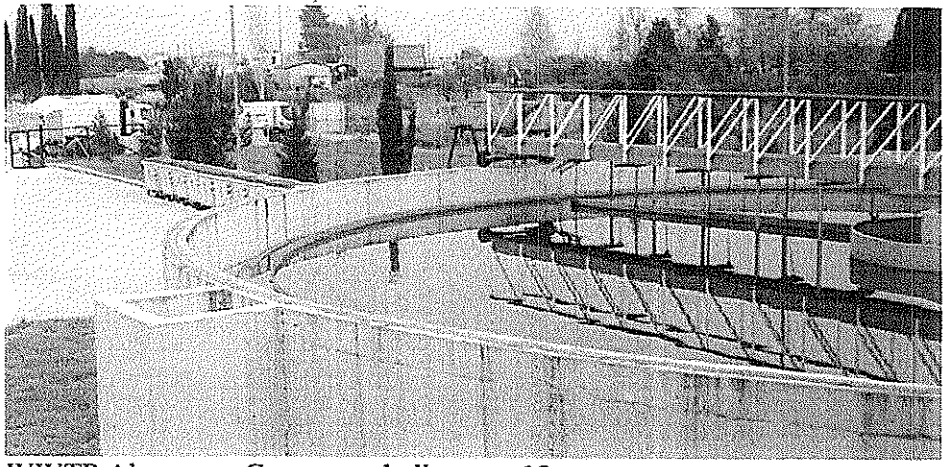

WWTP Almyros – Greece, tank diameter 18 m

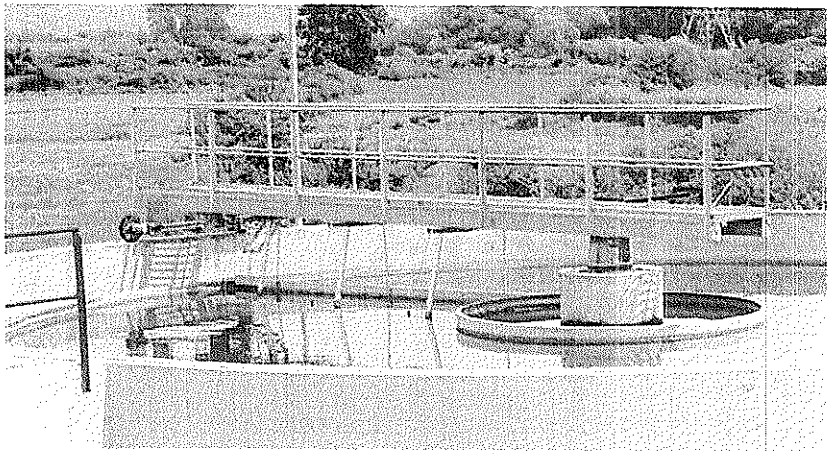

WWTP Filippiada – Greece, tank diameter 15 m

3/12/18

Prospect

5.6 RETURN ACTIVATED SLUDGE AND EXCESS SULDGE PUMPING STATION

3/12/18

Έργο: Ημερ/νία: 2017-09-06
Αριθμός Έργου: Συντάκτης:

Τεχνικά στοιχεία

Υποβρύχια αντλία λυμάτων Rexa PRO C10 DA-518 / EAD0X4-T0035-540-O

Αντλία							
Τύπος αντλίας		PROC10 D A - 518		Είδος εγκατάστασης		Einhängevorrichtung	
Πτερωτή (διάμ.)	Μέγ. Δυνατή	195	mm			DN100/2RK	
	Τυπικό (βασικό)	195	mm	Ελεύθερο πέρασμα		100	mm
	Σχεδιασμ.	195	mm	Στόμιο αναρ.	Βαθμ. PN	PN10	
	Ελάχ. Δυνατή	195	mm		Ονομ. διάμ.	DN100	
Ονομαστ. αριθμός στροφών		1450	1/min		Πρότυπο	WILO-S	
Συχνότητα		50	Hz	Στόμιο κατάθλ.	Βαθμ. PN	PN10	
Τύπος πτερωτής		Μονοκάναλη			Ονομ. διάμ.	DN100, Size 4	
Κατασκευή πτερωτής		Κλειστή			Πρότυπο	WILO-D	

Βάρη				
Βάρος υδραυλ. τμήματος αντλίας	Μέγ. 41	kg	Βάρος συγκροτήματος	Μέγ. 85 kg
Βάρος κινητήρα	44	kg		

Υλικά κατασκευής			
Κέλυφος αντλίας	EN-GJL-250		
Δακτύλ. διαρροής	1.4308		
Πτερωτή	EN-GJL-250		
Περιστρεφ. δακτύλ. φθοράς	1.4462/1.4470		

Κινητήρας				
Ονομασία κινητήρα	P 13.2-16/EAD0X4-T-L01		Αριθμός πόλων	4
Ονομ. ισχύς	3,45	kW	Ονομαστ. ταχύτ. Περιστροφής	1393 rpm
Απορρόφηση ισχύος σε Ονομ. ισχύ				4,45 kW
Ονομ. τάση				400 ~3 V
Απορρόφ. ρεύματος στην ονομ. ισχύ				8,1 A
Βαθμός απόδ. στην ονομ. ισχύ				77,6 %
συνφ στην Ονομ. ισχύ	0,8		Ονομ. συχνότητα	50 Hz
συνφ εκκίνησης	0,5		Είδος λειτουργίας: υγρή	S1
Ρεύμα εκκίνησης DOL	53	A	Είδος λειτουργίας: ξηρή	S2 30, S3 25%
Ρεύμα εκκίνησης Y/Δ	17,5	A	Μέγ. θερμοκρασία ρευστού	40 °C
Ροπή στρέψης εκκίνησης	67	Nm	Μέγ. αριθμ. ωριαίων εκκιν.	50
Ροπή αδράνειας μάζας	0,0042	kg m²	Βαθμός προστασίας	IP 68
Επιλεγμ. αντιεκρ. Προστασία	ATEX		Αριθμός Ex	BVS 11 ATEX E 119 X
Σήμανση Ex	II 2G Ex db IIB T4 Gb			
Καλώδιο σύνδεσης κινητήρα			7G1,5 H07RN-F	

Στοιχεία σημείου λειτουργίας					
Παροχή	99,8	m³/h	Ρευστό μέσον	Νερό, καθαρό	
Μαν. ύψος	7,7	m	Τιμή NPSH της αντλίας		m
Ισχύς στον άξονα P_2	2,95	kW	Ταχύτητα περιστροφής	1397	rpm
Βαθμός απόδ. Αντλίας	72,3	%	Ολικός βαθμός απόδοσης	$= \frac{P_2 * \text{Βαθμός απόδ. Αντλίας}}{P_1}$	
Απορροφώμενη ισχύς P_1	3,75	kW			
Μέγ. παροχή	155,8 m³/h	Μαν. ύψος σε Μέγ. Παροχή	6 m	Μαν. ύψος σε μηδεν. παροχή	12,7 m
Σημείο βέλτ. Απόδ. Q (ΣΒΑ)	143,1	m³/h	Σημείο βέλτιστης απόδοσης H (ΣΒΑ)	3	m
Νο είδους	6076772				

3/12/18

Έργο: Ημερ/νία: 2017-09-06
Αριθμός Έργου: Συντάκτης:

wilo

Τεχνικά στοιχεία

Υποβρύχια αντλία λυμάτων Rexa PRO C10 DA-518 / EAD0X4-T0035-540-O

Τεχνική περιγραφή
Υποβρύχια αντλία λυμάτων, ως υποβρύχιο συγκρότημα με κινητήρα, για σταθερή, κατακόρυφη τοποθέτηση, για άντληση ανεπεξέργαστων, χημικά και μηχανικά μη διαβρωτικών για την αντλία, λυμάτων. Ακτινικά διατεταγμένο στόμιο κατάθλιψης και αξονική αναρρόφηση. Το συγκρότημα είναι κατασκευασμένο με τρόπο εύκολο για τη συντήρηση. Οι παροχές πρέπει να εξασφαλίζονται κατά ISO 9906 Παρ. A.

3/12/18

Έργο: Ημερ/νία: 2017-09-06
Αριθμός Έργου: Συντάκτης:

wilo

Καμπύλες απόδοσης

Υποβρύχια αντλία λυμάτων — Rexa PRO C10 DA-518 / EAD0X4-T0035-540-O

Στοιχεία ισχύος σε σχέση με: Νερό, καθαρό [100%] ; 20°C; 998,19kg/m³; 0,0036014m³/h
Απόκλιση κατά ISO 9906 / Παράρτημα A.2

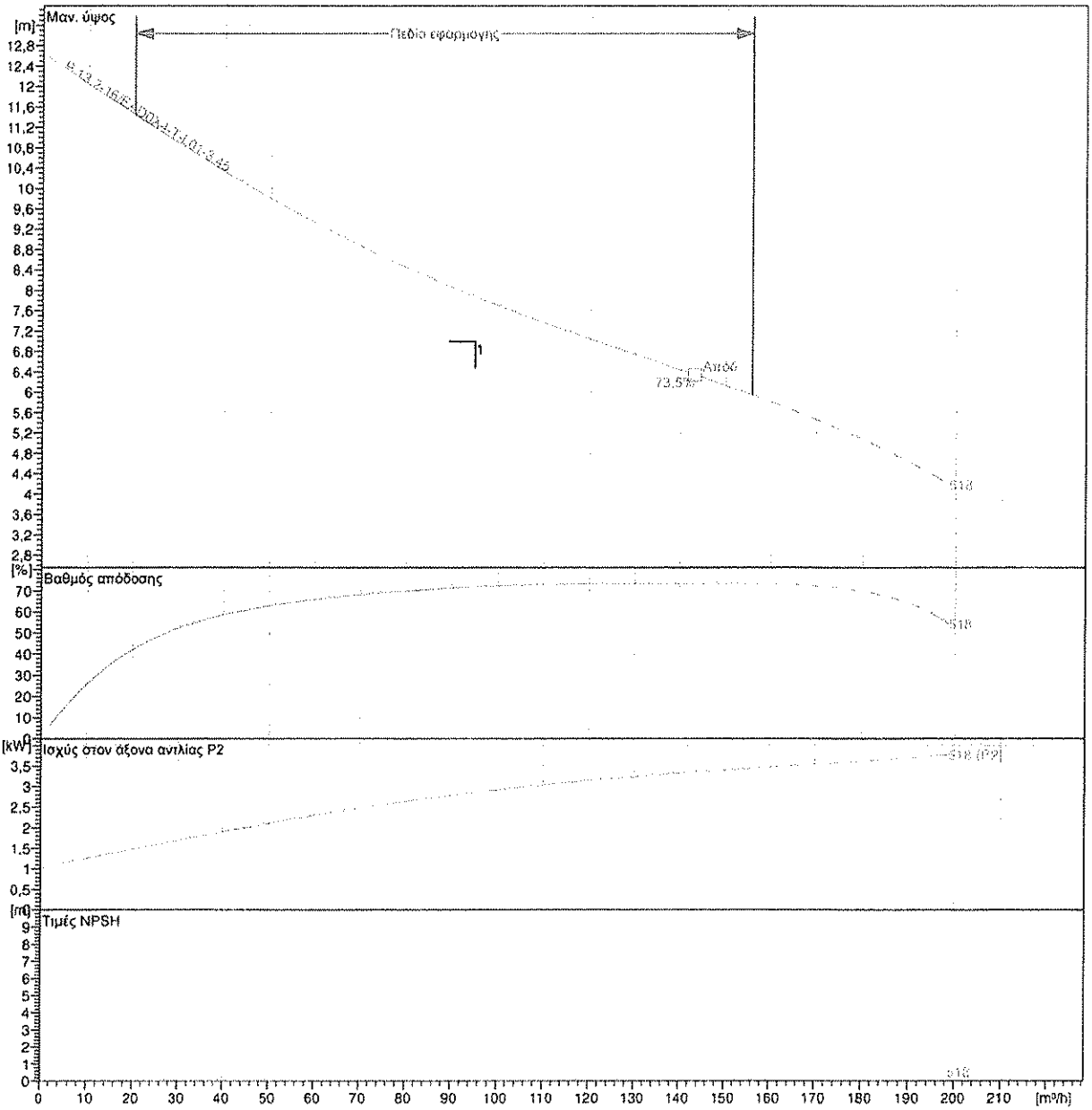

Αντλία			Στοιχεία σημείου λειτουργίας		
Πτερωτή (διάμ.) Σχεδιασμ.	195	mm	Παροχή	99,8	m³/h
Ονομαστικός αριθμός στροφών	1450	rpm	Μαν. ύψος	7,7	m
Συχνότητα	50	Hz	Ισχύς στον άξονα P_2	2,95	kW
Τύπος πτερωτής	Μονοκάναλη		Βαθμός απόδ. Αντλίας	72,3	%
Κινητήρας			Απορροφώμενη ισχύς P_1	3,75	kW
Ονομ. ισχύς	3,45	kW	Τιμή NPSH της αντλίας		m
Επιλεγμ. αντιεκρ. Προστασία	ATEX		Ταχύτητα περιστροφής	1397	rpm

3/12/18

Έργο:
Αριθμός Έργου:

Ημερ/νία: 2017-09-06
Συντάκτης:

wilo

Τεχνικά στοιχεία

Υποβρύχια αντλία λυμάτων

Rexa PRO C10 DA-518 / EAD0X4-T0035-540-O

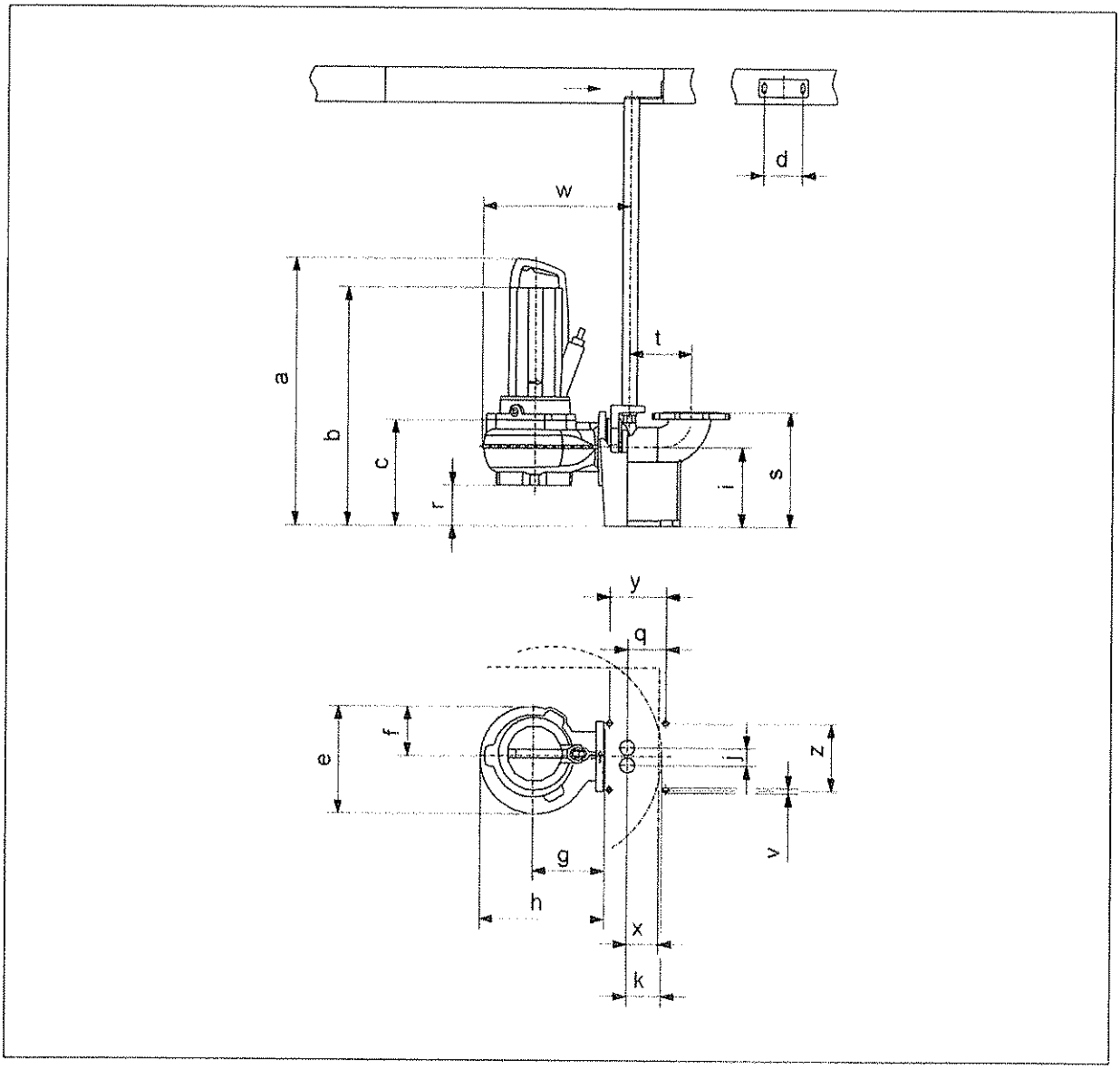

Διαστάσεις σε mm				Συνδέσεις
a	790	r	110	Στόμιο αναρ. DN100 PN10
b	707	s	325	
c	327	t	176	
d	110	v	15	
e	346	w	523	Στόμιο κατάθλ. DN100, Size 4 PN10
f	179	x	90	
g	200	y	160	
h	368	z	190	
i	225			Einhöngevorrichtung DN100/2RK
j	50			
k	98			
q	109			

3/12/18

Έργο: Ημερ/νία: 2017-09-06
Αριθμός Έργου: Συντάκτης:

wilo

Στοιχεία κινητήρα

P 13.2-16/EAD0X4-T-L01-3,45 3,45 kW 400 V 50Hz 3~

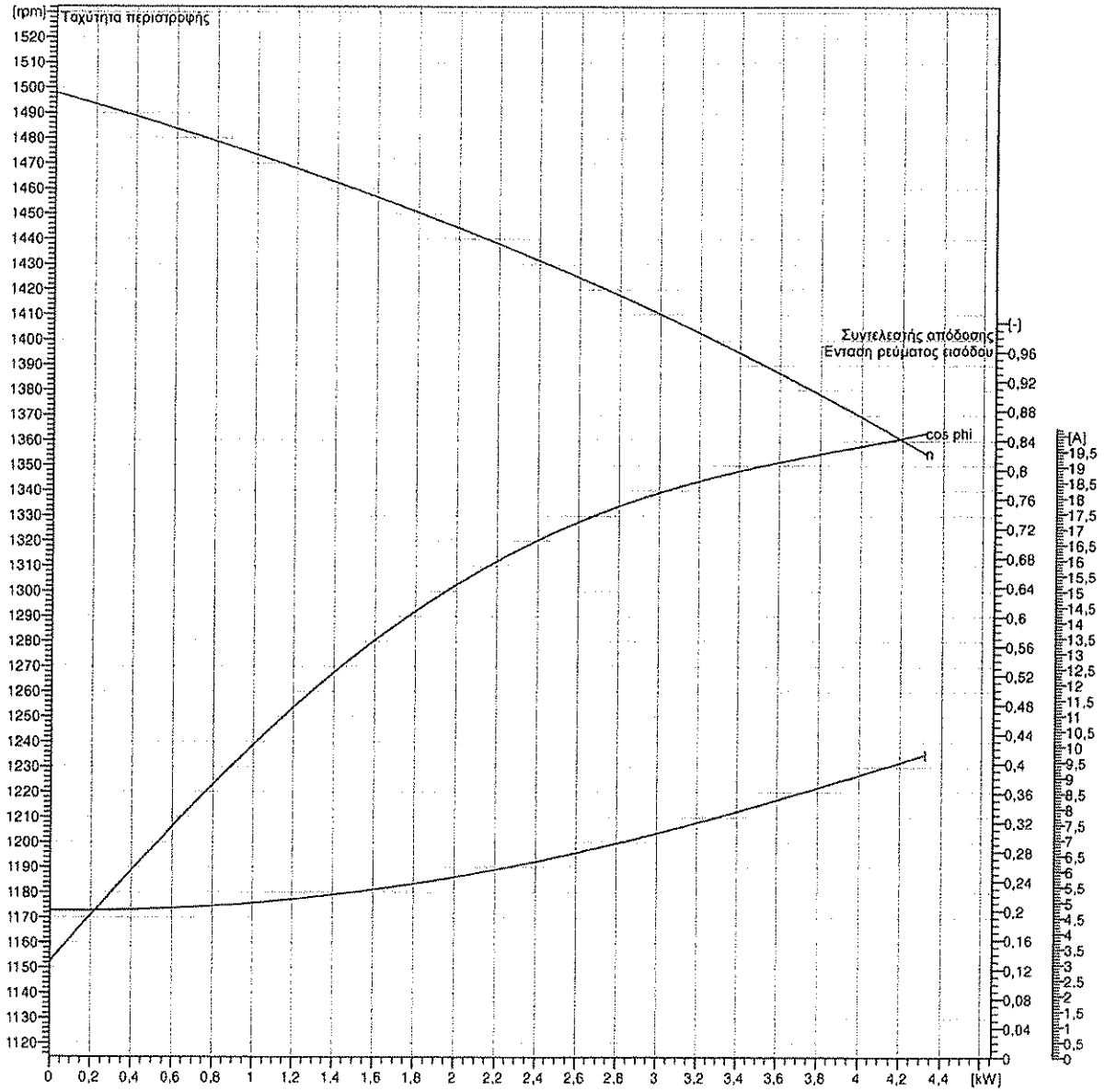

Στοιχεία εφαρμογής			Στοιχεία κινητήρα		
Είδος υποβρύχιας λειτουργίας	S1		Απορρόφηση ισχύος σε Ονομ. ισχύ	4,45	kW
Είδος λειτουργίας: ξηρή	S2 30, S3 25%		Ονομ. ισχύς	3,45	kW
Συντελεστής Service	1		Ονομαστ. ταχύτ. Περιστροφής	1393	rpm
Μέγ. θερμοκρασία ρευστού	40	°C	Απορρόφ. ρεύματος στην ονομ. ισχύ	6,1	A
Αντιεκρηκτική προστασία			Μέγ. αριθμ. ωριαίων εκκιν.	50	
Επιλεγμ. αντιεκρ. Προστασία	ATEX		Βάρος κινητήρα	44	kg
Αριθμός Ex	BVS 11 ATEX E 119 X		Βαθμός απόδ. στην ονομ. ισχύ	77,6	%
Σήμανση Ex	II 2G Ex db IIB T4 Gb		συνφ στην Ονομ. ισχύ	0,8	
Καλώδιο σύνδεσης κινητήρα			Ρεύμα εκκίνησης DOL	53	A
Καλώδιο σύνδ. κινητ.για εκκίνηση DOL	7G1,5 H07RN-F		συνφ εκκίνησης	0,5	
Καλώδιο σύνδ. κινητ. για εκκίνηση Y/Δ			Ροπή στρέψης εκκίνησης	67	Nm
Μέγ. δυνατό καλ. σύνδ. Κινητήρα	7x1,5	mm²	Ροπή αδράνειας μάζας	0,0042	kg m²

3|12|18

CERTIFICATE

This is to certify that

WILO SE

Nortkirchenstraße 100
44263 Dortmund
Germany

with the organizational units/sites as listed in the annex

has implemented and maintains a **Quality Management System**.

Scope:
Development, manufacture, sales and service of pumps and pump systems for Building Services, Water Management and Industry.

Through an audit, documented in a report, it was verified that the management system fulfills the requirements of the following standard:

ISO 9001 : 2008

Certificate registration no.	060313 QM08
Date of revision	2016-04-24
Valid from	2015-04-30
Valid until	2018-04-29
Date of certification	2015-04-30

DAkkS
Deutsche
Akkreditierungsstelle
D-ZM-16074-01-00

DQS GmbH

G. Blechschmidt

Götz Blechschmidt
Managing Director

3/12/18

Annex to Certificate
Registration No. 060313 QM08

WILO SE

Nortkirchenstraße 100
44263 Dortmund
Germany

Location	Scope
522452 **WILO SE** **Felicitasstraße 5** **44263 Dortmund** **Germany**	Development, manufacture, sales and service of pumps and pump systems for Building Services, Water Management and Industry.
522453 **WILO SE** **Strümpenbusch 3** **44357 Dortmund** **Germany**	Development, manufacture, sales and service of pumps and pump systems for Building Services, Water Management and Industry.
283115 **WILO SE** **Heimgartenstraße 1-3** **95030 Hof** **Germany**	Development, Manufacture, Sales and Service of: -pumps and electrical motors for water supply, lowering of water level and booster plants -pumps and electrical motors for sewage disposal and treatment -pumps and electrical motors for drainage of pits, sumps, building sites and so on -submersible mixers and electrical motors for flow generation or for mixing of liquids for communal or industrial applications -technical equipment for sewage treatment plants, digester gas plants, waterworks and pumping stations
070047 **WILO SE** **Anderslebener Straße 161** **39387 Oschersleben** **Germany**	Development and manufacture of pumps and pump systems for Building Services, Water Management and Industry.
521114 **WILO INTEC SAS** **50, avenue Eugene Casella** **18700 Aubigny-sur-Nère** **France**	Design, manufacturing and sales of circulators and hydraulic units for Heating Ventilation Air Conditioning industry.

This annex (edition: 2016-04-24) is only valid in connection with the above-mentioned certificate.

3/12/18

Annex to Certificate
Registration No. 060313 QM08

WILO SE

Nortkirchenstraße 100
44263 Dortmund
Germany

Location	Scope
527816 **WILO INTEC SAS organizačná zložka** **Slovakia** **Zlatovská 2193/33** **91105 Trenčin** **Slovakia**	Manufacturing of circulators for Heating Ventilation Air Conditioning industry.
520706 **Wilo Salmson France SAS** **80 boulevard de l'Industrie** **CS 90527** **53005 Laval Cedex** **France**	Development, manufacture, sales and service of pumps and pump systems for Building Services, Water Management an Industry.
522448 **Wilo Salmson France SAS** **ZA Autoroutière 1005 bd de la Communication** **53950 Louverné** **France**	Development, manufacture, sales and service of pumps and pump systems for Building Services, Water Management an Industry.
521111 **Wilo Salmson France SAS** **30, rue du 35e Regiment d'Aviation** **69673 Bron** **France**	Development, manufacture, sales and service of pumps and pump systems for Building Services, Water Management an Industry.
520707 **Wilo Salmson France SAS** **53, boulevard de la République Espace Lumière, Bât. 6** **78400 Chatou** **France**	Development, manufacture, sales and service of pumps and pump systems for Building Services, Water Management and Industry.

3/12/18

This annex (edition: 2016-04-24) is only valid in connection with the above-mentioned certificate.

Annex to Certificate
Registration No. 060313 QM08

WILO SE

Nortkirchenstraße 100
44263 Dortmund
Germany

Location	Scope
521112 **WILO Pumps Ltd.** **Unit B1 Corcanree Business Park** **Dock Road** **Limerick** **Ireland**	Manufacture of pumps for Building Services.
521113 **STEMMA S.R.L.** **via postale VECCHIA, 20** **36070 Trissino.VI** **Italy**	Manufacture of stainless steel components for pumps and Technical products.
520708 **WILO China Ltd.** **No. 10 Zhaofeng 2nd Street, Zhaofeng Industrial Zone,** **Zhaoquanying, Shunyi District,** **101300 Beijing** **China**	Manufacturing, Sales and After Sales Service of Pumps, Pump Systems and Pump Systems Piece Parts including Control Box for Building, Municipalities, Industry and Agriculture
522450 **WILO China Ltd.** **No.285 Qinhuang West Street,** **Qinhuangdao Economic & Technological Development Zone** **066004 Qinhuangdao, Hebei Province** **China**	Manufacturing, of Pumps for Building, Industry and Agriculture
521117 **WILO ELEC CO. LTD.** **No.285 Qinhuang West Street,** **Qinhuangdao Economic & Technological Development Zone** **066004 Qinhuangdao, Hebei Province** **China**	Research, Design and Production of AC Motors for Pumps

3/12/18

This annex (edition: 2016-04-24) is only valid in connection with the above-mentioned certificate.

Annex to Certificate
Registration No. 060313 QM08

WILO SE

Nortkirchenstraße 100
44263 Dortmund
Germany

Location	Scope
521118 **Wilo Mather and Platt Pumps Private Limited** **S. No. 162,** **Mumbai - Pune Road,** **Chinchwad** **Pune 411 019** **India**	Design, development, manufacture, installation and servicing of centrifugal pumps/pump sets and valves and contracts of pumping system on turnkey basis.
521120 **Wilo Mather and Platt Pumps Private Limited** **Sales** **Sales office, 201to 206,** **Premier Plaza,** **Mumbai - Pune Road,** **Chinchwad** **Pune 411 019** **India**	Design, development, manufacture, installation and servicing of centrifugal pumps/pump sets and valves and contracts of pumping system on turnkey basis.
521119 **Wilo Mather and Platt Pumps Private Limited** **E 25, MIDC,** **Gokul Shirgaon Industrial Area** **Kolhapur 416234** **India**	Design, development, manufacture, installation and servicing of centrifugal pumps/pump sets and valves and contracts of pumping system on turnkey basis.
521116 **WILO Pumps Limited** **46 Mieumsandan 1-ro** **Gangseo-gu** **Busan 618-220** **South Korea**	Design, development, manufacture, sales and service of pumps and pump systems

This annex (edition: 2016-04-24) is only valid in connection with the above-mentioned certificate.

3/12/18

Annex to Certificate
Registration No. 060313 QM08

WILO SE

Nortkirchenstraße 100
44263 Dortmund
Germany

Location	Scope
514915 **WILO Pompa Sistemleri A.Ş.** **Orhanli Mah.** **Mehmet Akif Ersoy Cad. No 91** **Tuzla** **34956 Istanbul** **Turkey**	Sales, Service of Pumps & Pump Systems and Development, Assembly of Pump Systems for Building Services, Water Management and Industry
501447 **WILO Pumpen Österreich GmbH** **WILO Straße 1** **2351 Wiener Neudorf** **Austria**	Sales and service of pumps and pump systems for Building Services, Water Management and Industry.
516442 **WILO nv** **Rusatiralaan 2** **1083 Ganshoren** **Belgium**	Sales and service of pumps and pump systems for Building Services, Water Management and Industry.
522451 **Wilo Polska Sp. z o.o.** **Jedności 5** **05-506 Lesznowola** **Poland**	Implementation to the market, sale and service of pumps, pump systems for heating, ventilation, air conditioning, water supply and sanitary engineering
518368 **WILO Nordic AB** **Isbjörnsvägen 6** **35245 Växjö** **Sweden**	Sales and service of pumps and pump systems for Building Services, Water Management and Industry.
525082 **WILO Magyarország Kft.** **Torbágy u. 14** **2045 Törökbálint** **Hungary**	Sales and service of pumps and pump systems for Building Services, Water Management and Industry.

3/12/18

This annex (edition: 2016-04-24) is only valid in connection with the above-mentioned certificate.

Έργο: Ημερ/νία: 2017-09-06
Αριθμός Έργου: Συντάκτης:

wilo

Τεχνικά στοιχεία

Υποβρύχια αντλία λυμάτων Rexa PRO V05 DA-222 / EAD1X2-T0025-540-O

Αντλία							
Τύπος αντλίας		PROV05 D A - 222		Είδος εγκατάστασης		Suspension device DN50 DN50/2RK	
Πτερωτή (διάμ.)	Μέγ. Δυνατή	110	mm				
	Τυπικό (βασικό)	110	mm	Ελεύθερο πέρασμα		50	mm
	Σχεδιασμ.	110	mm	Στόμιο αναρ.	Βαθμ. PN	PN10	
	Ελάχ. Δυνατή	110	mm		Ονομ. διάμ.	DN50	
Ονομαστ. αριθμός στροφών		2900	1/min		Πρότυπο	WILO-S	
Συχνότητα		50	Hz	Στόμιο κατάθλ.	Βαθμ. PN	PN10	
Τύπος πτερωτής		Πτερωτή Vortex			Ονομ. διάμ.	DN50, Size 2, Rp2	
Κατασκευή πτερωτής		Ανοικτό			Πρότυπο	WILO-D	

Βάρη				
Βάρος υδραυλ. τμήματος αντλίας	Μέγ. 13,8	kg	Βάρος συγκροτήματος	Μέγ. 47,8 kg
Βάρος κινητήρα	34	kg		

Υλικά κατασκευής			
Κέλυφος αντλίας	EN-GJL-250		
Πτερωτή	EN-GJL-250		
Κέλυφος κινητήρα	EN-GJL-250		

Κινητήρας					
Ονομασία κινητήρα	P 13.1-10/EAD1X2-T-L01		Αριθμός πόλων	2	
Ονομ. ισχύς	2,5	kW	Ονομαστ. ταχύτ. Περιστροφής	2848	rpm
Απορρόφηση ισχύος σε Ονομ. ισχύ				3,2	kW
Ονομ. τάση				400 ~3	V
Απορρόφ. ρεύματος στην ονομ. ισχύ				5,5	A
Βαθμός απόδ. στην ονομ. ισχύ				78,6	%
συνφ στην Ονομ. ισχύ	0,84		Ονομ. συχνότητα	50	Hz
συνφ εκκίνησης	0,5		Είδος λειτουργίας: υγρή	S1	
Ρεύμα εκκίνησης DOL	31	A	Είδος λειτουργίας: ξηρή	S2 30, S3 25%	
Ρεύμα εκκίνησης Y/Δ	10,5	A	Μέγ. θερμοκρασία ρευστού	40	°C
Ροπή στρέψης εκκίνησης	21	Nm	Μέγ. αριθμ. ωριαίων εκκιν.	50	
Ροπή αδράνειας μάζας	0,0017	kg m²	Βαθμός προστασίας	IP 68	
Επιλεγμ. αντιεκρ. Προστασία	ATEX		Αριθμός Ex	BVS 11 ATEX E 119 X	
Σήμανση Ex	II 2G Ex db IIB T4 Gb				
Καλώδιο σύνδεσης κινητήρα			7G1,5 H07RN-F		

Στοιχεία σημείου λειτουργίας					
Παροχή	26,1	m³/h	Ρευστό μέσον	Νερό, καθαρό	
Μαν. ύψος	10,1	m	Τιμή NPSH της αντλίας		m
Ισχύς στον άξονα P_2	1,69	kW	Ταχύτητα περιστροφής	2915	rpm
Βαθμός απόδ. Αντλίας	42,5	%	Ολικός βαθμός απόδοσης	$= \frac{P_2 * \text{Βαθμός απόδ. Αντλίας}}{P_1}$	
Απορροφώμενη ισχύς P_1	2,2	kW			
Μέγ. παροχή	49,5 m³/h	Μαν. ύψος σε Μέγ. Παροχή	4,2 m	Μαν. ύψος σε μηδεν. παροχή	16,2 m
Σημείο βέλτ. Απόδ. Q (ΣΒΑ)	20,4	m³/h	Σημείο βέλτιστης απόδοσης H (ΣΒΑ)	11,7	m
Νο είδους	6064724				

3/12/18

Έργο:
Αριθμός Έργου:

Ημερ/νία: 2017-09-06
Συντάκτης:

wilo

Τεχνικά στοιχεία

Υποβρύχια αντλία λυμάτων — Rexa PRO V05 DA-222 / EAD1X2-T0025-540-O

Τεχνική περιγραφή
Υποβρύχια αντλία λυμάτων, ως υποβρύχιο συγκρότημα με κινητήρα, για σταθερή, κατακόρυφη τοποθέτηση, για άντληση ανεπεξέργαστων, χημικά και μηχανικά μη διαβρωτικών για την αντλία, λυμάτων. Ακτινικά διατεταγμένο στόμιο κατάθλιψης και αξονική αναρρόφηση. Το συγκρότημα είναι κατασκευασμένο με τρόπο εύκολο για τη συντήρηση. Οι παροχές πρέπει να εξασφαλίζονται κατά ISO 9906 Παρ. Α.

3|12|18

Έργο:
Αριθμός Έργου:

Ημερ/νία: 2017-09-06
Συντάκτης:

wilo

Καμπύλες απόδοσης

Υποβρύχια αντλία λυμάτων

Rexa PRO V05 DA-222 / EAD1X2-T0025-540-O

Στοιχεία ισχύος σε σχέση με: Νερό, καθαρό [100%] ; 20°C; 998,19kg/m³; 0,0036014m³/h
Απόκλιση κατά ISO 9906 / Παράρτημα A.2

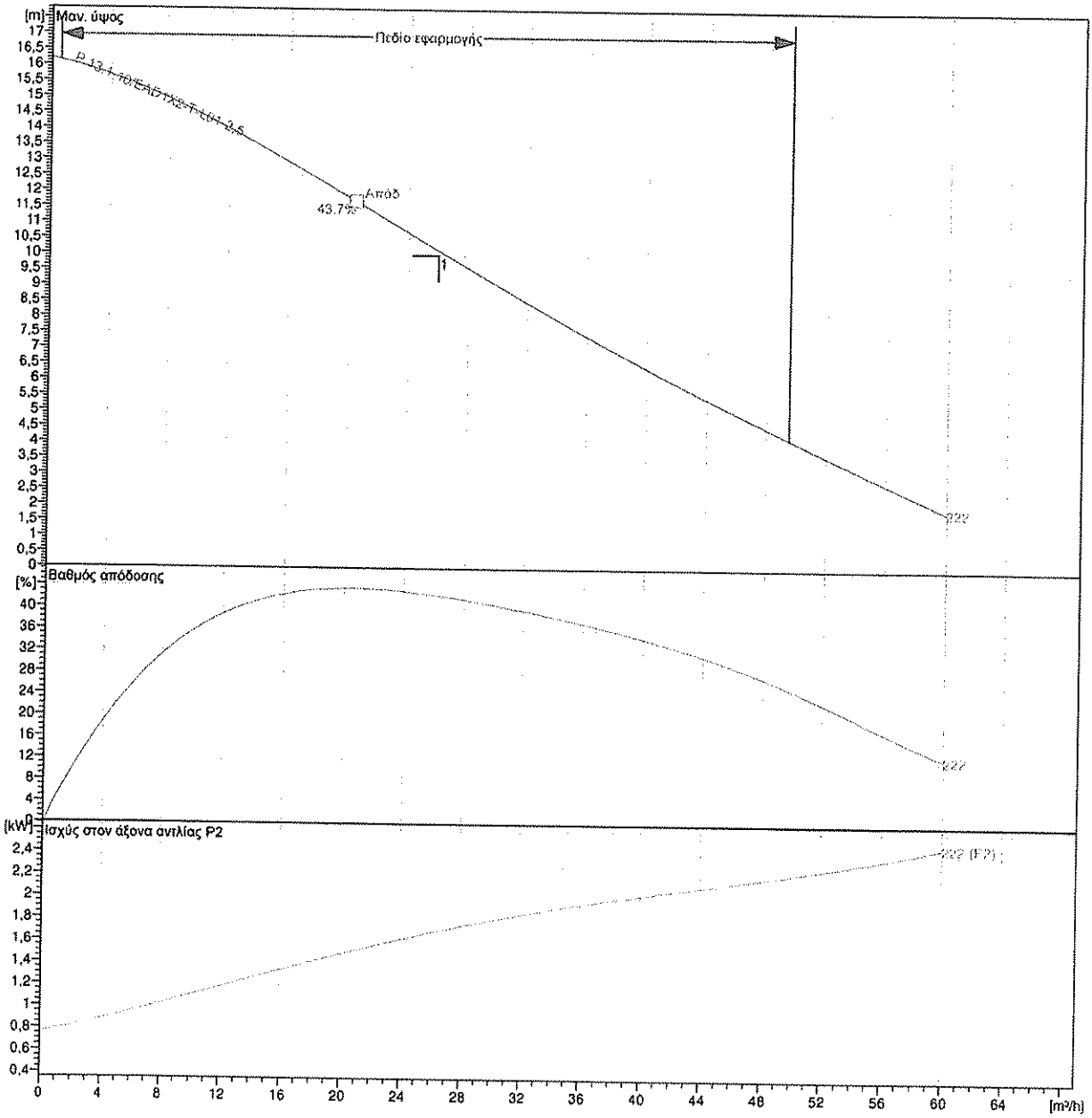

Αντλία				Στοιχεία σημείου λειτουργίας			
Πτερωτή (διάμ.)	Σχεδιασμ.	110	mm	Παροχή		26,1	m³/h
Ονομαστικός αριθμός στροφών		2900	rpm	Μαν. ύψος		10,1	m
Συχνότητα		50	Hz	Ισχύς στον άξονα	P_2	1,69	kW
Τύπος πτερωτής		Πτερωτή Vortex		Βαθμός απόδ. Αντλίας		42,5	%
Κινητήρας				Απορροφώμενη ισχύς	P_1	2,2	kW
Ονομ. ισχύς		2,5	kW	Τιμή NPSH της αντλίας			m
Επιλεγμ. αντιεκρ. Προστασία		ATEX		Ταχύτητα περιστροφής		2915	rpm

3/12/18

Έργο: Ημερ/νία: 2017-09-06
Αριθμός Έργου: Συντάκτης:

wilo

Τεχνικά στοιχεία

Υποβρύχια αντλία λυμάτων Rexa PRO V05 DA-222 / EAD1X2-T0025-540-O

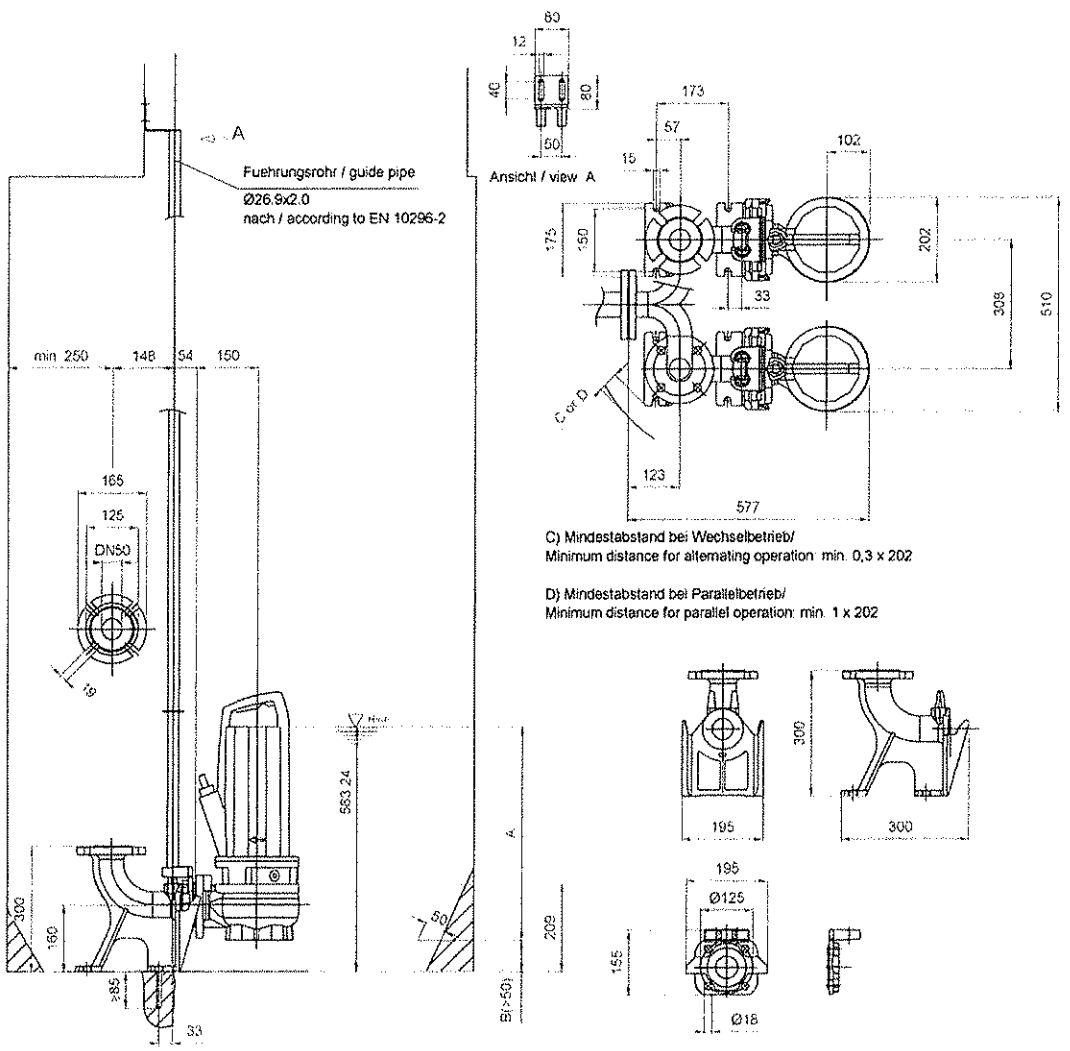

Διαστάσεις σε mm				Συνδέσεις
B	65			Στόμιο αναρ. DN50 PN10
				Στόμιο κατάθλ. DN50, Size 2, Rp2, cutoff PN10
				Suspension device DN50 DN50/2RK

3/12/18

Έργο:
Αριθμός Έργου:

Ημερ/νία: 2017-09-06
Συντάκτης:

wilo

Στοιχεία κινητήρα

P 13.1-10/EAD1X2-T-L01-2,5 2,5 kW 400 V 50Hz 3~

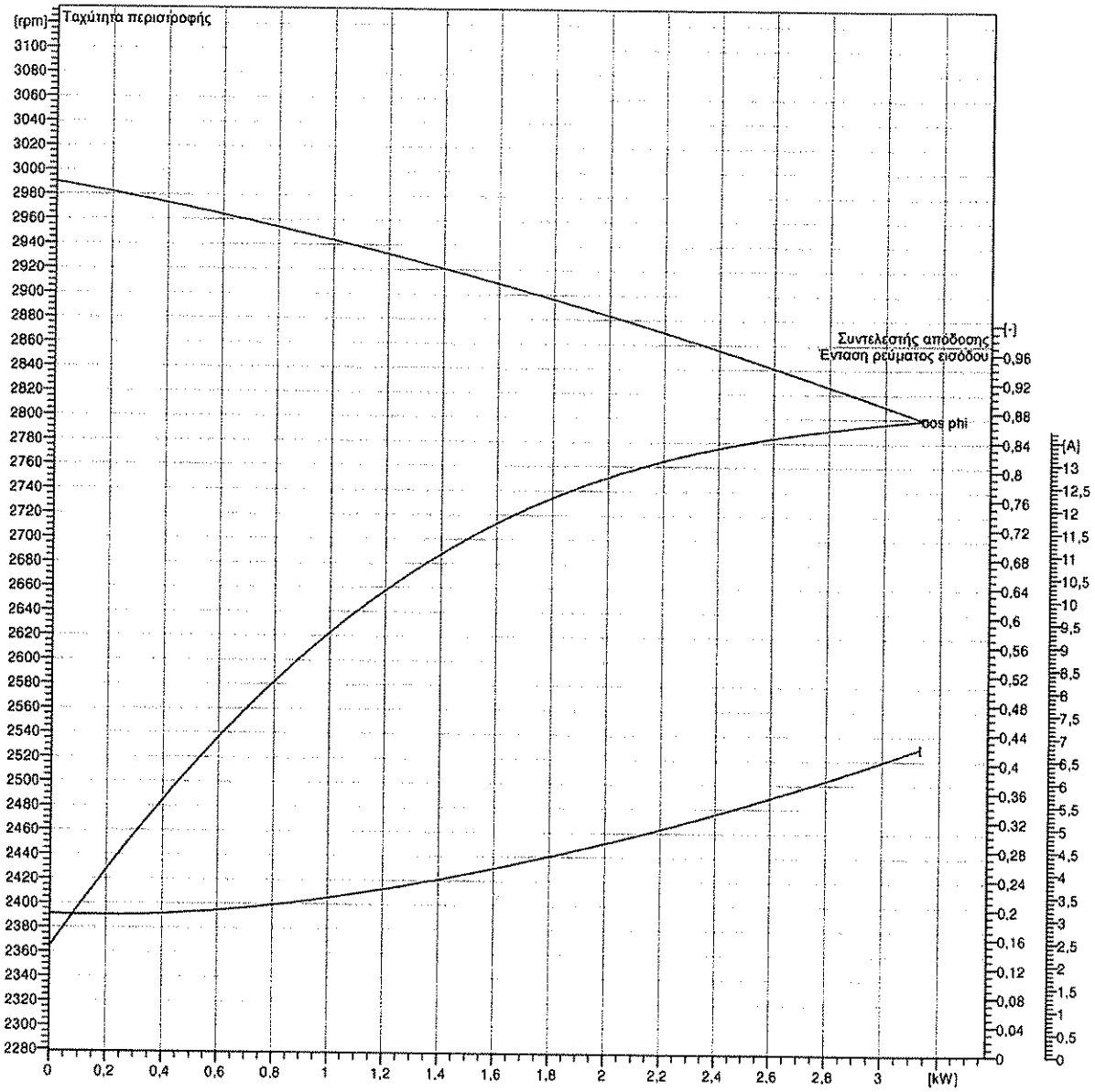

Στοιχεία εφαρμογής			Στοιχεία κινητήρα		
Είδος υποβρύχιας λειτουργίας	S1		Απορρόφηση ισχύος σε Ονομ. ισχύ	3,2	kW
Είδος λειτουργίας: ξηρή	S2 30, S3 25%		Ονομ. ισχύς	2,5	kW
Συντελεστής Service	1		Ονομαστ. ταχύτ. Περιστροφής	2848	rpm
Μέγ. θερμοκρασία ρευστού	40	°C	Απορρόφ. ρεύματος στην ονομ. ισχύ	5,5	A
Αντιεκρηκτική προστασία			Μέγ. αριθμ. ωριαίων εκκιν.	50	
Επιλεγμ. αντιεκρ. Προστασία	ATEX		Βάρος κινητήρα	34	kg
Αριθμός Ex	BVS 11 ATEX E 119 X		Βαθμός απόδ. στην ονομ. ισχύ	78,6	%
Σήμανση Ex	II 2G Ex db IIB T4 Gb		συνφ στην Ονομ. ισχύ	0,84	
Καλώδιο σύνδεσης κινητήρα			Ρεύμα εκκίνησης DOL	31	A
Καλώδιο σύνδ. κινητ.για εκκίνηση DOL	7G1,5 H07RN-F		συνφ εκκίνησης	0,5	
Καλώδιο σύνδ. κινητ. για εκκίνηση Y/Δ			Ροπή στρέψης εκκίνησης	21	Nm
Μέγ. δυνατό καλ. σύνδ. Κινητήρα	7x1,5	mm²	Ροπή αδράνειας μάζας	0,0017	kg m²

3/12/18

5.7 CHEMICAL PHOSPHORUS PRECIPITATION

3/12/18

Alson A.E.

Company name: ALSON SA
Created by:
Phone: 2102855878
Email: info@alson.gr
Date: 05/09/2017

Position	Qty.	Description
	1	**DDA 30-4**

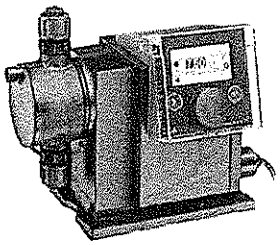

Note! Product picture may differ from actual product

Product No.: 97722256
DDA 30-4 AR-PVC/V/C-F-31U2U2FG

The SMART Digital DDA is a compact positive displacement, diaphragm dosing pump with variable-speed drive (stepper motor) and intelligent control electronics with minimum energy consumption. The SMART Digital Dosing series operates at full stroke length to ensure optimum accuracy, priming and suction, even for high-viscosity or degassing liquids. The duration of each discharge stroke varies according to the capacity set, resulting in optimum smooth and continuous discharge flow.

The click-stop mounting plate allows installation in three different positions without using any additional accessories. The control cube can be turned easily into front, left or right position. The click wheel and the multi-coloured backlit graphical, plain-text LC display make commissioning and operation intuitive. The control elements are protected by a transparent cover.

The dosing head is composed of:
- Long lifetime and universal, chemically resistant full-PTFE diaphragm.
- Double ball valves for highest dosing accuracy.
- Deaeration valve for easy start-up.

Operation modes:
- Manual dosing in ml/h, l/h or gph.
- Pulse control in ml/pulse (incl. memory function).
- Analog control 0/4-20 mA (scalable).
- Pulse-based batch function in ml, l or gal.
- Timer-based batch function (Dosing timer, cycle or week).
- Fieldbus control (Genibus prepared for ProfibusDP E-box).

Other features:
- Auto deaeration during pump standby to avoid breakdowns due to air-locking.
- Two SlowMode steps (anti-cavitation), 50 % (maximum flow: 15 l/h) and 25 % (maximum flow: 7.5 l/h), e.g. for high-viscosity or degassing liquids.
- Service information display to show when service and which wear-part order number is required.
- Two-step key lock function to protect the pump against unauthorised access.
- Additional display function to provide further information, e.g. the actual mA input signal.
- Counter for total dosed volume (resettable), operating hours, etc.
- Save and load customised settings as well as reload of factory settings.

Signal inputs/outputs:
- Input for pulse, analog 0/4-20mA, external stop.
- Input for low-level and empty-tank signal.
- Two potential-free output relays for max. 30 V AC/DC (configurable, e.g. alarm, stroke signal, pump dosing, timer etc.)
- Output analog 0/4-20mA.
- Fieldbus communication interface (GeniBus, also for additional Profibus DP E-box to retrofit).

Technical:

Type key:	DDA 30-4 AR-PVC/V/C-F-31U2U2FG
Max. Flow:	30 l/h
Max. flow in slow mode 50%:	15 l/h
Max. flow in slow mode 25%:	7.5 l/h
Min flow:	30,0 ml/h
Turn-down ratio:	1:1000
Approvals on nameplate:	CE,CSA-US,NSF61,EAC,RCM
Valve type:	Standard

3/12/18

Alson A.E.

Company name: ALSON SA
Created by:
Phone: 2102855878
Email: info@alson.gr
Date: 05/09/2017

Position	Qty.	Description

Maximum viscosity at 100 %: 150 mPas
Maximum viscosity in slow mode 50 %: 600 mPas
Maximum viscosity in slow mode 25 %: 1500 mPas
Accuracy of repeatability: 1 %

Materials:

Dosing head:	PVC (Polyvinyl chloride)
Valve ball:	Ceramic
Gasket:	FKM

Installation:

Range of ambient temperature:	0 .. 45 °C
Maximum operating pressure:	4 bar
Installation set:	NO
Installation type:	No installation set
Pump inlet:	4/6, 6/9, 6/12, 9/12 mm
Pump outlet:	4/6, 6/9, 6/12, 9/12 mm
Max. Suction lift during operation:	6 m
Max. Suction lift during priming:	2 m

Liquid:

Pumped liquid:	Water
Liquid temperature range:	-10 .. 45 °C
Liquid temperature during operation:	20 °C
Density:	998.2 kg/m³

Electrical data:

Maximum power input - P1:	24 W
Mains frequency:	50 Hz
Rated voltage:	1 x 100-240 V
Enclosure class (IEC 34-5):	IP65 / NEMA 4X
Length of cable:	1.5 m
Type of cable plug:	EU
Inrush current:	25A at 230V for 2ms

Controls:

Control variant:	AR
Level control:	YES
Analog input:	0/4-20 MA
Pulse control:	YES
Ext. Stop input:	YES
Analog output:	0/4-20 MA
Output relays:	2
Bus communication:	YES

Others:

Net weight:	3 kg
Gross weight:	4 kg
Color:	GREEN

3/12/18

Certificate DE13/81841218

The management system of

Grundfos Management A/S

Poul Due Jensens Vej 7
8850 Bjerringbro
Denmark

has been assessed and certified as meeting the requirements of

ISO 9001:2008

For the following activities

Development, manufacturing, service, repair, sales and distribution of components, pumps, electrical motors, pump systems, equipment and services in connection with movement of liquids.

This certificate is valid from 15 February 2015 until 14 February 2018 and remains valid subject to satisfactory surveillance audits.
Re certification audit due before 31 December 2017
Issue 5. Certified since 17 June 2011

This is a multi-site certification.
Additional site details are listed on subsequent pages.

Authorised by

SGS United Kingdom Ltd Systems & Services Certification
Rossmore Business Park Ellesmere Port Cheshire CH65 3EN UK
t +44 (0)151 350-6666 f +44 (0)151 350-6600 www.sgs.com

This document is issued by the Company subject to its General Conditions of Certification Services accessible at www.sgs.com/terms_and_conditions.htm Attention is drawn to the limitations of liability, indemnification and jurisdictional issues established therein. The authenticity of this document may be verified at http://www.sgs.com/clients/certified_clients.htm Any unauthorized alteration, forgery or falsification of the content or appearance of this document is unlawful and offenders may be prosecuted to the fullest extent of the law

3/12/18

Grundfos Management A/S

ISO 9001:2008

Issue 5

Detailed scope

Development, manufacturing, service, repair, sales and distribution of components, pumps, electrical motors, pump systems, equipment and services in connection with movement of liquids.

Additional facilities

Production sites

Certificate No. and Issue Date	Country)	Company Name and Address
DE13/81841218.01 15/02/2015	**Denmark**	**Grundfos A/S** Poul Due Jensens Vej 7 8850 Bjerringbro
DE13/81841218.02 15/02/2015	**Finland**	**Grundfos Environment Finland Oy** Kaivokselantie 3 - 5 01610 Vantaa
DE13/81841218.03 15/02/2015	**France**	**Pompes Grundfos S.A.** Route de Faulquemont 57740 Longeville-Les-Saint Avold
DE13/81841218.04 15/02/2015	**England**	**Grundfos Manufacturing Ltd.** Ferryboat Lane Castletown, Sunderland, SR5 3JL
DE13/81841218.05 15/02/2015	**USA**	**Grundfos Pumps Manufacturing Corporation** 5900 E. Shields Avenue 93727 Fresno
DE13/81841218.06 15/02/2015	**P. R. China**	**Grundfos Pumps (Suzhou) Ltd.** Qingqiu Road 72 Suzhou, Jiangsu 215126 P.R.China

UKAS MANAGEMENT SYSTEMS
005

This document is issued by the Company subject to its General Conditions of Certification Services accessible at www.sgs.com/terms_and_conditions.htm Attention is drawn to the limitations of liability, indemnification and jurisdictional issues established therein. The authenticity of this document may be verified at http://www.sgs.com/clients/certified_clients.htm. Any unauthorized alteration, forgery or falsification of the content or appearance of this document is unlawful and offenders may be prosecuted to the fullest extent of the law.

3/12/18

Certificate No. and Issue Date	(Country)	Company Name and Address
DE13/81841218.07 15/02/2015	Germany	**Grundfos Pumpenfabrik GmbH** Willy Pelz Strasse 1-5 23812 Wahlstedt
DE13/81841218.08 15/02/2015	Germany	**Grundfos Water Treatment GmbH** Reetzstrasse 85 76327 Pfinztal
DE13/81841218.09 15/02/2015	Hungary	**Grundfos Hungary Manufacturing Ltd.** Búzavirág u. 14 2800 Tatabánya
DE13/81841218.10 15/02/2015	Russia	**Grundfos Istra OOO** Leshkovo N 188 Istra Area 143581 Moscow region
DE13/81841218.11 15/02/2015	Taiwan	**Grundfos Handels AG Taiwan Branch** 14, Minyou Road Tongluo Township 36646, R.O.C. Miaoli County
DE13/81841218.12 15/02/2015	Serbia	**Grundfos Srbija d.o.o (Manufacturing)** Obilazni put - Sever 21 22320 Indjija
DE13/81841218.20 15/02/2015	Mexico	**Bombas GRUNDFOS de Mexico Manufacturing S.A. de C.V.** Circuito Exportación 272, Parque Industrial Tres Naciones 2da Etapa 78395 San Luis Potosí, S.L.P

Development and Research Sites

DE13/81841218.13 15/02/2015	Denmark	**Grundfos Management A/S** Poul Due Jensens Vej 7 8850 Bjerringbro
DE13/81841218.14 15/02/2015	Germany	**Grundfos Water Treatment GmbH** Reetzstrasse 85 76327 Pfinztal

UKAS MANAGEMENT SYSTEMS 005

This document is issued by the Company subject to its General Conditions of Certification Services accessible at www.sgs.com/terms_and_conditions.htm Attention is drawn to the limitations of liability, indemnification and jurisdictional issues established therein. The authenticity of this document may be verified at http://www.sgs.com/clients/certified_clients.htm. Any unauthorized alteration, forgery or falsification of the content or appearance of this document is unlawful and offenders may be prosecuted to the fullest extent of the law.

3/12/18

Sales and service companies

DE13/81841218.15 15/02/2015	**Denmark**	**Grundfos A/S** Martin Bachs Vej 3 8850 Bjerringbro
DE13/81841218.16 15/02/2015	**England**	**Grundfos Pumps Ltd** Grovebury Road Leighton Buzzard Bedfordshire LU7 4TL
DE13/81841218.17 15/02/2015	**England**	**Grundfos Service Limited** Beswick House Greenfold Way, Leigh Lancashire WN7 3XJ
DE13/81841218.18 15/02/2015	**England**	**Grundfos Watermill Limited** Gemini House Enterprise Way Edenbridge Kent TN8 6HF
DE13/81841218.19 15/02/2015	**Ireland**	**Grundfos (Ireland) Limited** Unit A, Merrywell Business Park Ballymount Road Lower, Dublin 12
DE13/81841218.21 15/02/2015	**Thailand**	**GRUNDFOS (Thailand) Limited** 92 Chaloem Phrakiat Rama 9 Road Dokmai, Pravej Bangkok 10250
DE13/81841218.22 15/02/2015	**Argentina**	**Bombas Grundfos de Argentina S.A.** Ruta Panamericana ramal Campana Km. 37,500 Centro Industrial Garin, Esquina Haendel y Mozart 1619 Pcia. Buenos Aires
DE13/81841218.23 15/02/2015	**South Africa**	**Grundfos (PTY) Ltd** 16 Lascelles Road, Meadowbrook Germiston. 1609 P.O. Box 1456 2008 Bedfordview

UKAS MANAGEMENT SYSTEMS
005

This document is issued by the Company subject to its General Conditions of Certification Services accessible at www.sgs.com/terms_and_conditions.htm Attention is drawn to the limitations of liability, indemnification and jurisdictional issues established therein. The authenticity of this document may be verified at http://www.sgs.com/clients/certified_clients.htm Any unauthorized alteration, forgery or falsification of the content or appearance of this document is unlawful and offenders may be prosecuted to the fullest extent of the law.

3/12/18

HORIZONTAL, SEALLESS PP AND PVDF CENTRIFUGAL PUMP WITH PERMANENT MAGNET DRIVE SYSTEM, NO MECHANICAL SEAL

CM MAG-P

Outline drawings

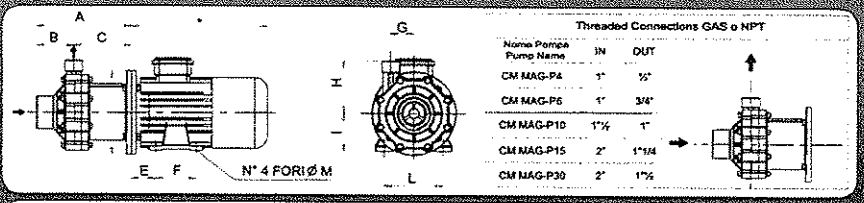

Threaded Connections GAS o NPT

Nome Pompa / Pump Name	IN	OUT
CM MAG-P4	1"	½"
CM MAG-P6	1"	3/4"
CM MAG-P10	1"½	1"
CM MAG-P15	2"	1"1/4
CM MAG-P30	2"	1"½

Pump Name	GR.	A	B	C	D	E	F	G	H	I	L	M
CM MAG-P4	56	114	38.5	75.5	120	36	71	34	80	56	90	5.8
CM MAG-P6	63	143	58	84	140	40	80	46	91	63	100	7
CM MAG-P10	71	180	70.8	109.5	160	45	90	44	100	71	112	7
CM MAG-P15	80	231	81	150	200	50	100	62.5	125	80	125	9.5
CM MAG-P30	90	278	91	187	200	56	100	66.5	140	90	140	10
CM MAG-P30	100/112	296	91	205	250	63	140	66.5	140	100	160	12

Performance curves

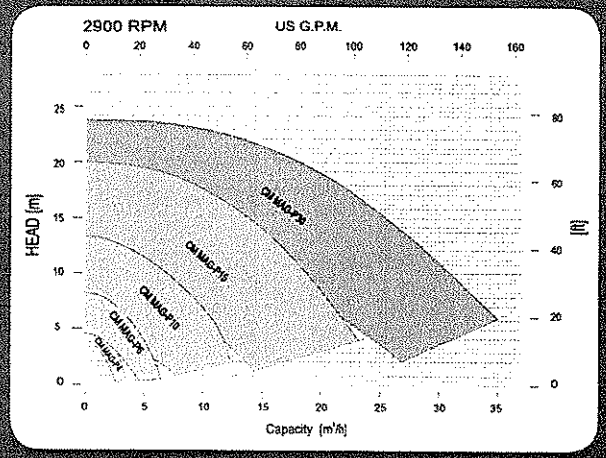

Pump construction and Operative Limits

Close-coupled drivers are conventional drivers mounted directly to pumps frame. No base, coupling or guards are required for this mounting style.

- Connections: Threaded BSP (GAS) & NPT
- Max viscosity: 200 cSt
- Max system pressure: 5 bar
- Flow up: to 35mc/h
- Head up: to 23 m
- Temperature range: from 24 °F (-5 °C) to +194 °F (+90 °C)
- Electric motors from 1,5Kw up to 5kW

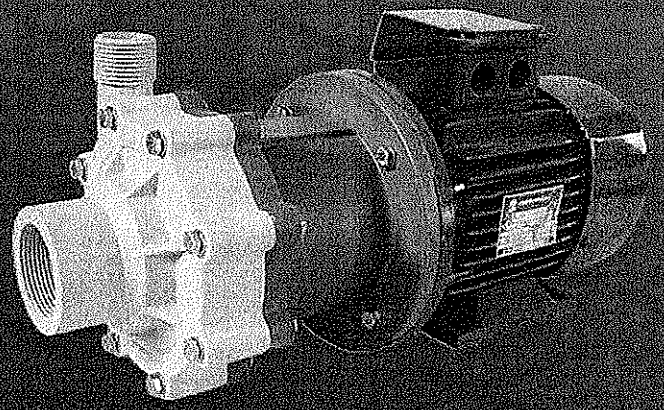

CM MAG-P Series

The separation of liquid chamber/atmosphere by means of an isolation shell is the best solution to pump aggressive chemical, high purity liquids and liquids difficult to seal.

Hermetic sealless injection moulded thermoplastic pumps are the best solution for light duty applications.

A wide range of pumps covers the different performances.

Manufactured by:

M PUMPS

A unit of Mischiatti GROUP

M PUMPS s.r.l. - Via dell'Artigianato, 120
45015 Corbola (Ro) - Italy - www.mpumps.it
Tel. +39 0426 346304 - Fax +39 0426 349126

For more information please contact:

Printed on 06-06-2012

PUMP DETAILS

Making a comparison between this range of pumps and the other two M PUMPS series C MAG-P and C MAG-PL, the correct definition becomes few components (extremely easy maintenance), competitive prices, guaranteed chemical compatibility.

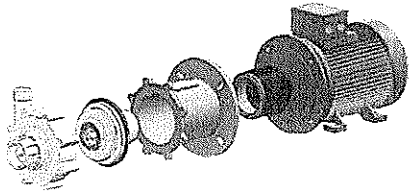

Pump casing shall be one single piece, injection moulded designs, made of GFR PP and CFR PVDF.

RWP QUICK CHANGE CARTRIDGE KIT
to guarantee an easy and fast maintenance, materials PP and PVDF.

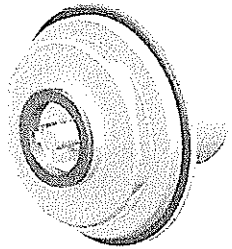

The sealing system with O-Rings prevents from leaking in the atmosphere – different materials available:

- EPDM
- VITON®

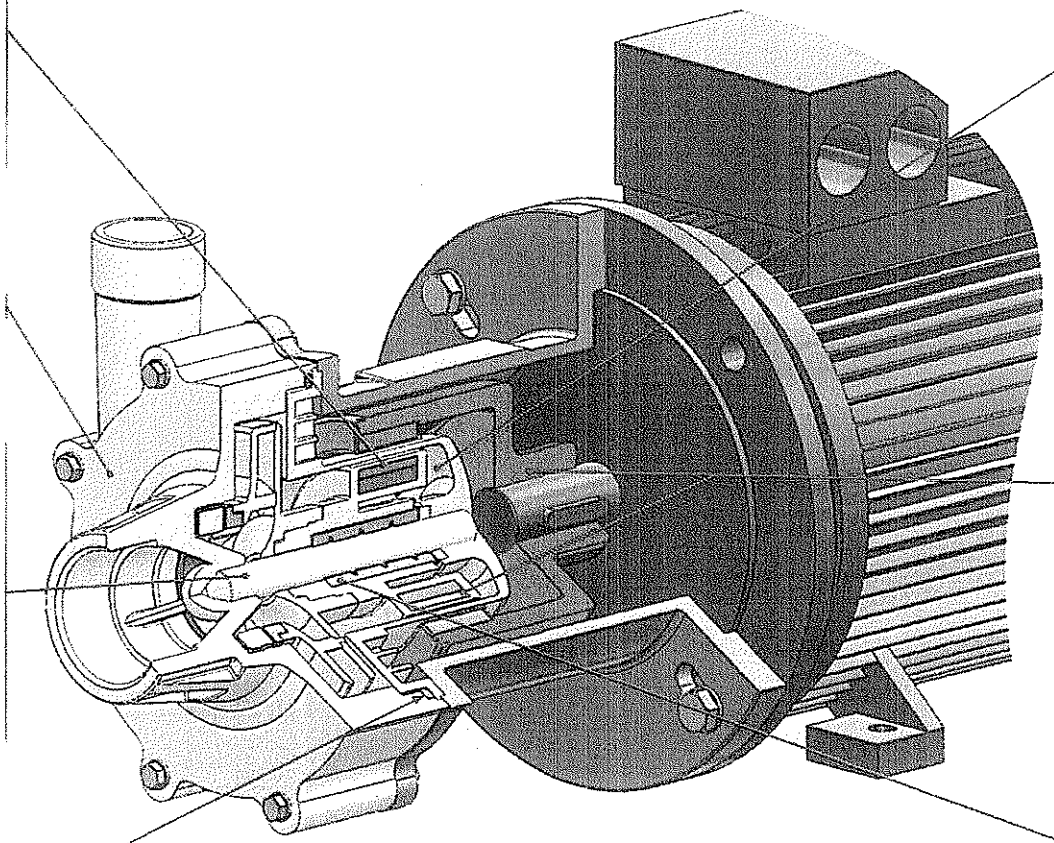

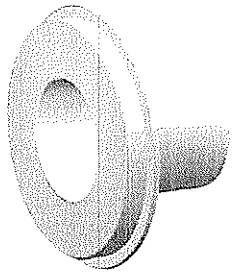

The rear shell is made of thermoplastic materials, ellipsoidal profile, zero magnetic losses, GFR PP or CFR PVDF materials.

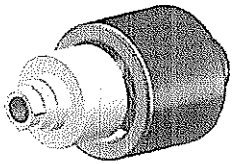

High power synchronous magnetic coupling designed by our Technical Office and with magnetic elements mechanically locked.

Rare earth guarantee the magnetic-balancing to avoid the thrust bearings wear and the heat generation.

Field assembling of the product lubricated bearing arrangement does not require special tools.
The Shaft / Bearing materials are available in two different configurations to provide the best solution for each application:

- PTFEC – ALLUMINA 99,7% (standard)
- CARBON – ALLUMINA 99,7%

Pump performance data		
MODEL: CM MAG-P15	Curve N°: 10017	Rev.:01
ITEM:	Power [kW]: ---	
Project:	2900 RPM	

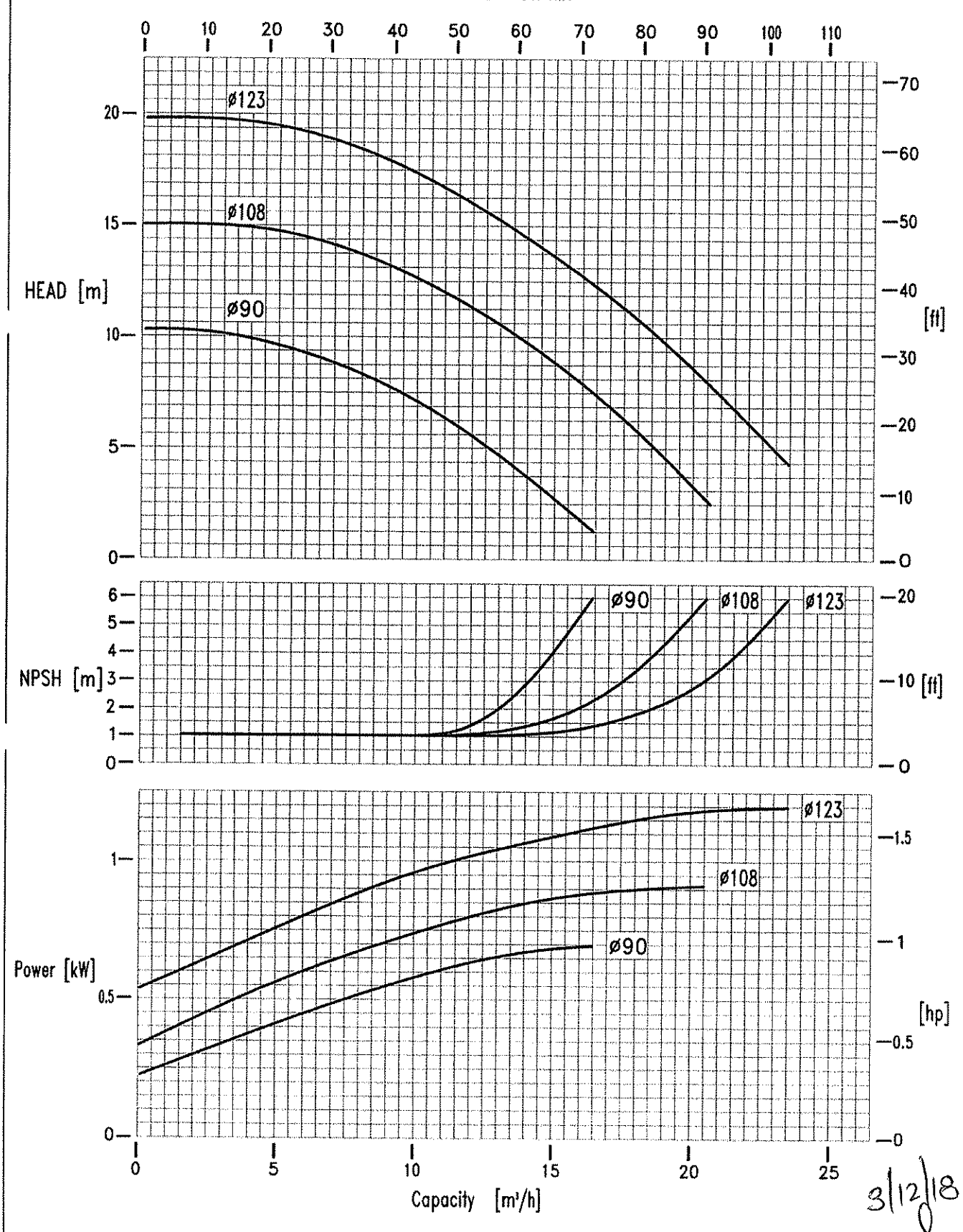

3/12/18

6. FILTRATION UNIT

3/12/18

MICROSCREEN DRUM FILTER

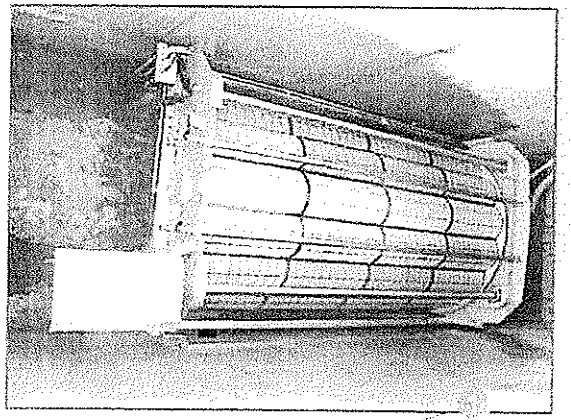

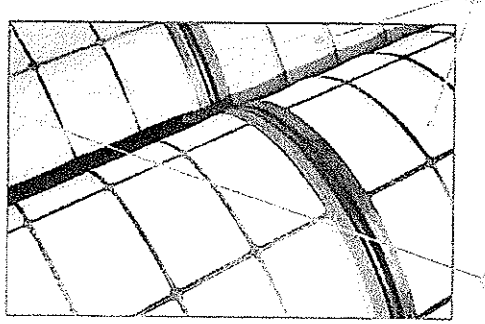

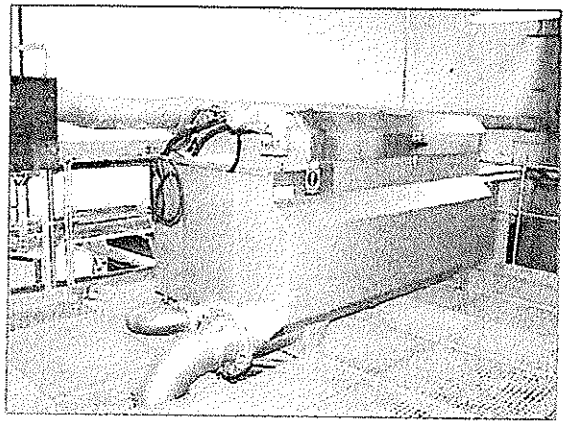

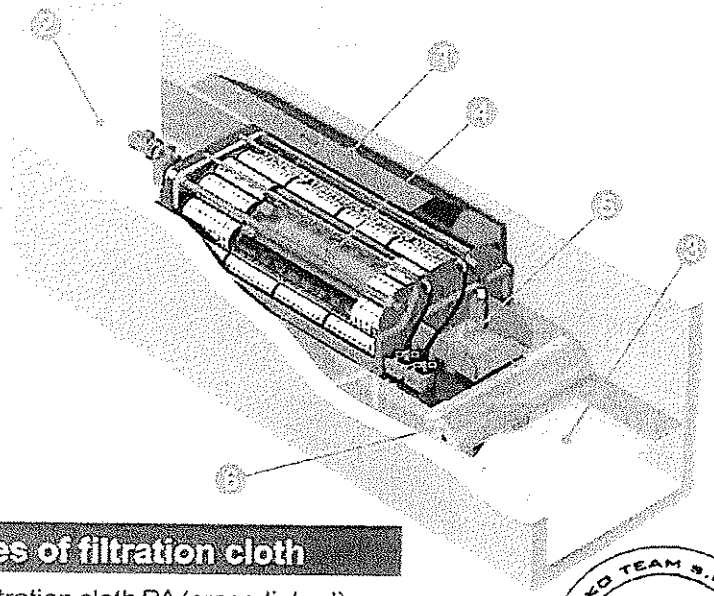

Types of filtration cloth

1. Filtration cloth PA (cross-linked)
2. Stainless steel filter cloth

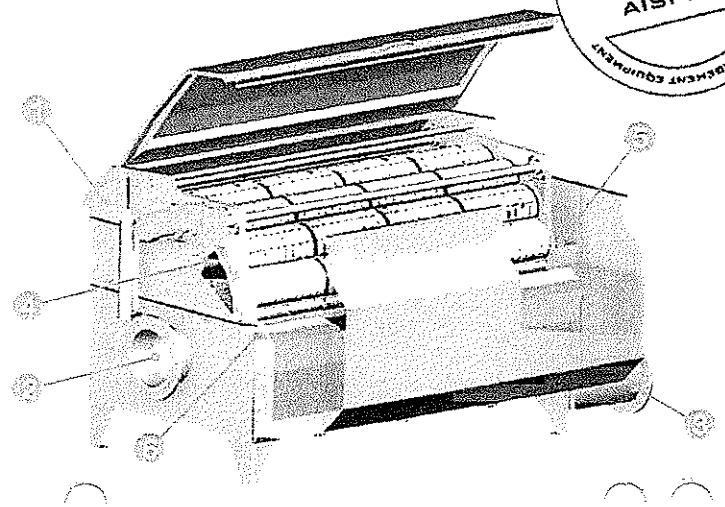

INEKO TEAM S.R.O.
AISI 304
AISI 316
WATER MANAGEMENT EQUIPMENT

Microscreen Drum Filter – version for concrete channels

The Microscreen Drum Filter is simply fitted. and bolted to a prepared concrete channel. The sizes of the concrete channel depend on the filter size. The concrete channel must be equipped by an crest.

1. Microscreen drum filter
2. Inlet
3. Outlet
4. Sludge manger
5. Sludge tank
6. Crest

Microscreen Drum Filter – version for the steel tank

The Microscreen Drum Filter in the steel tank is a compact unit which is mounted on flanges. The sizes of the filter and the flange depend on the filter size.

MICROSCREEN DRUM FILTER

IN-EKO TEAM

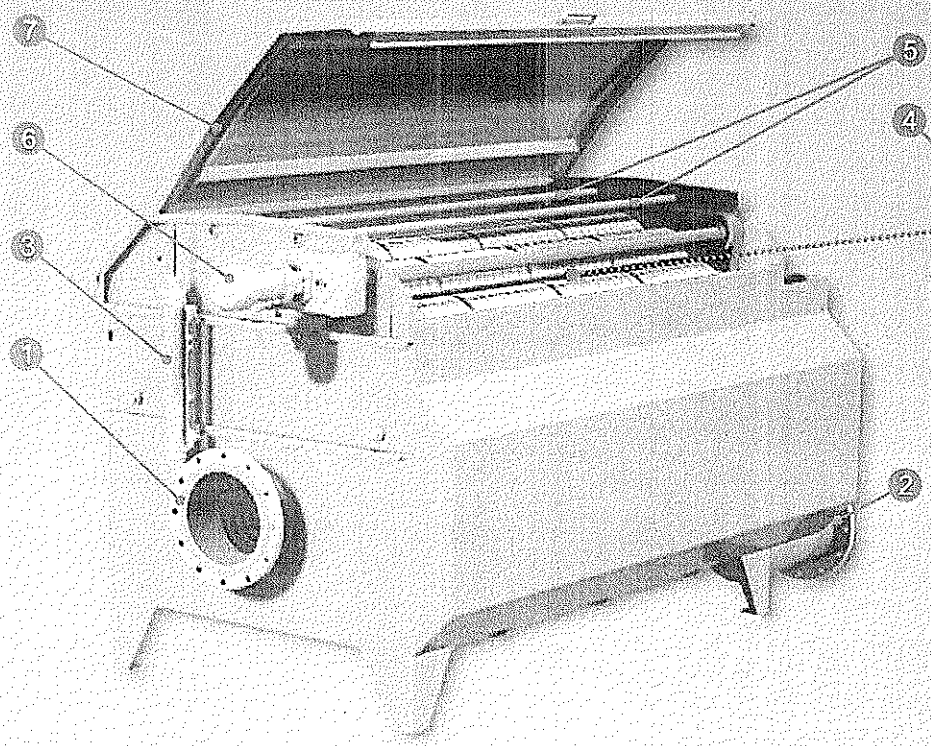

1 inlet
2 outlet
3 water level sensor
4 filtration drum
5 backwash pipes
6 drive
7 cover
8 filtration cartridge

type	filtration area [m2]	No. of cartridges	max. flow [l/s]*
1FB	0,728	7	10
2FB	1,872	18	25
3FB	3,744	36	50
4FB	6,240	60	80
5FB	9,360	90	120
6FB	13,104	126	200

*stated capacities to be considered only as informational

IN - EKO TEAM s.r.o.
Trnec 1734, Tišnov 666 03
Czech Republic
tel.: +420 549 415 234
fax: +420 549 412 383
e-mail: sales@in-eko.cz
e-mail: info@in-eko.cz
www.in-eko.com

CzWA
The Czech Water Association

"cli - clo"

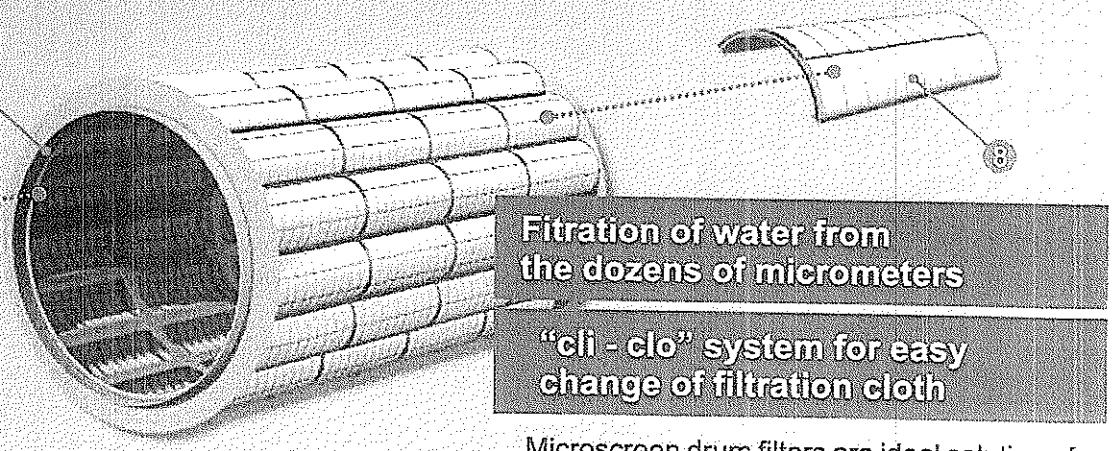

Fitration of water from the dozens of micrometers

"cli - clo" system for easy change of filtration cloth

Microscreen drum filters are ideal solution of filtration of wastewater at WWTP.

Another solution of their use is to filtrate water from papermill and textile industry, power plants, heating plants, fish farms, ZOOs and many other operations.

"CLI-CLO" SYSTEM

Princip is based on uniform cartridge for all the filter sizes.

Montage of filtration cartridge is done very quickly with no need of fixing elemnts neither the tools.

- designed for concrete channels or stainless steel tanks
- removing of SS, COD, BOD5 from the wastewater
- its own emergency overflow
- already filtrered water is used for backwash of filtration cloth
- made of stainless steel

IN-EKO TEAM

MICROSCREEN DRUM FILTER

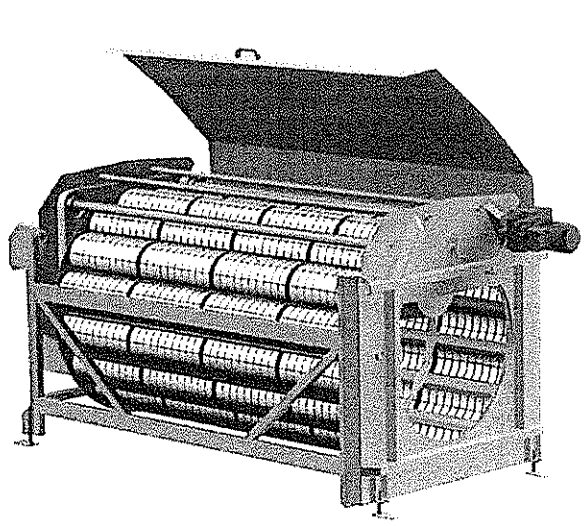

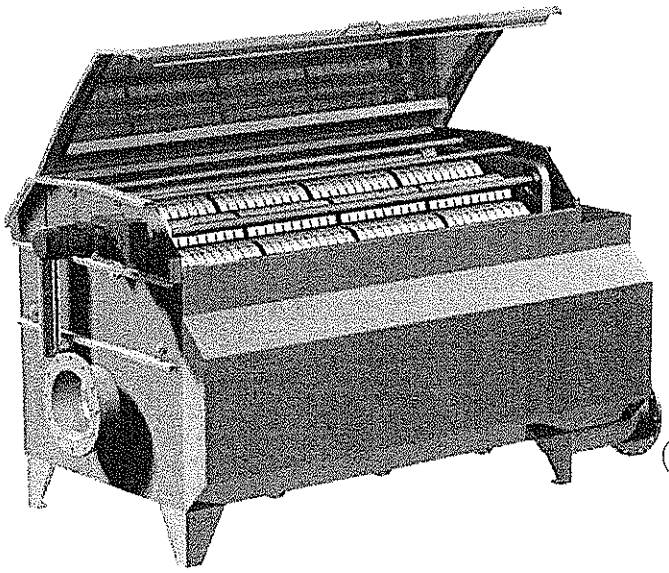

...information for designers...

verze 18072011

3/12/18

TABLE OF CONTENTS

TABLE OF CONTENTS 2
Microscreen drum filter 3
1. Installation into the concrete channel 4
2. Installation into the steel tank 5
Installation of the filter 5
Type designation 6
Innovation of the filter drum 7
FBB 9
Working platform: 16
FBO 17
Dimension chart of steel filters 20
Dimension chart of steel filters 23
Connecting sizes for filter inlet and outlet in the steel tank: 23
Standard switchboards: 25
Contacts 26

3/12/18

Microscreen drum filter

Use

Microscreen drum filters of FB type are suitable for tertiary treatment, mainly for removal of undissolved matter in municipal and industrial waste water treatment plants. Further it is used in fish farms, food processing and paper manufacturing plants and for recycling of cooling water in power plants. In some cases filters can be used for recovery of rare substances.

Operation

Water containing solid particles flows through the inlet pipe (sewer) into the interior part of the filter drum. Impurities are caught on the inner side of the filter cloth and the filtered water flows through the cloth out. The entire filter remains off during this process. As the filter cloth slowly becomes clogged by the increasing amount of filtered debris, its resistance to the flow increases and the water level inside the filter drum rises. When the preset difference between the levels inside and outside of the filter drum is reached, the water level sensor positioned at the front of the filter, is automatically activated. Simultaneously the drum drive and the backwash pump/-s which pumps the filtered water into the jet rinse system are activated. The debris accumulated on the inner side of the filter cloth is removed by the directed jet stream of water from the nozzles and then washed into the waste trough positioned in the inner drum. The debris is then washed into the sludge tank where it is washed out by the sludge pump. This pump is automatically controlled by the level sensors located on the wall of the sludge tank. If there is a gravitational discharge pipe, the sludge pump is not necessary.

After the rinsing process is finished, hydrostatic pressure drops. The rinsed cloth is moved to the bottom of the filter by the rotation of the drum, the difference in levels inside and outside the drum diminishes and the sensor automatically switches off the drum rotation and the pump. The rotating drum and the pump remain off until reactivated. This operation mode repeats in cycles. The ratio of the rest cycle and the rotation cycle depends on the amount of detritus flowing into the filter, its character and the condition of the filter cloth.

As the flow of untreated water remains uninterrupted throughout the entire filtration process, and the flow of the rinse water is taken directly from the filter, no additional backwash trays or sludge trays are needed. This significantly reduces investment costs.

The automatic activation and deactivation of the filter reduces the amount of electricity needed for the operation of the filter. It also improves the average quality of the water filtered (creation of auxiliary filtering layer), increases the density of the effluent sludge and prolongs the life of the entire system.

Right choice

The basic parameter of the filtering capacity of the filter is the effective area of the filter cloth which is given by the selected filter size. The second parameter is the size of pores in the filter cloth and the third is its free functional area. Filtering capacity is also considerably influenced by the **character of filtered solids,** such as shape of filtered solids (flat particles clog pores more easily than round ones), mechanical strength (cohesive particles are easier to filter than non-cohesive, mucous ones) and the proportion of small and big particles in the total volume of influent water. At a certain quantity of cohesive particles bigger than the pores in the filter cloth, a thin layer of sludge is formed – secondary filter layer, capable of catching particles which are considerably smaller than the size of pores in the filter cloth. Therefore it is advisable to select a filter with a bigger filter area so the idle time of the filter is long enough to create a secondary filter layer on the inside part of the filter cloth. This layer is washed away into the waste trough during backwash of the filter cloth.

3/12/18

All the above mentioned criteria, which normally are not constant, influence the immediate filtering capacity of the filter.

Filter cloth with the pore size of 0.04mm have proved to work well for microscreen filters used for tertiary treatment in municipal and industrial waste water treatment plants. In the case of big pollution of waste water or in the case of special usage, the size of the filter and parameters of the filter cloth must be selected based on the experience with filtration in the similar conditions or by a filter test.

In any case it is recommended to consult the type of filter to be used with IN-EKO representative and to know **the average amount of undissolved matter** in water which is to be filtered, proposed **average flow** through the filter and estimated **maximum flow** through the filter.

Filters are manufactured in several versions to satisfy possible requirements of the designers:

1. Installation into the concrete channel

The base is a concrete channel of accurate dimensions according to the design drawing, with an overflow edge. There is also a service area and a by-pass channel.

The overflow edge is not part of the delivery and must be absolutely waterproof!

There must be no reinforcing or other bearing partitions in the channel for the filter e.g. for gratings and they must not, in any way, narrow the channel.

The cover of the channel and service tank must be insulated and made of solid material to prevent it from freezing. The filter can be supplied with an insulated cover, it is used in cases when it is not possible to insulate the channel or when the filter reaches over the channel. This way the cover is protected against freezing and there is no danger of rupture of the filter cloth by ice.

Service area:

- The main advantage of the drum innovation is that it is not necessary to remove the filter from the channel (there is "cli-clo" system) when changing the filter cloth (filter sections). The service area provides good access to the filter.
- Regular check of the filter (checking the function of the level sensors, sludge pump, drive, etc.) can be easily performed from the service area.
- The sizes of the service tank are given in the design drawings. Normally the service area should be at least 700mm wide, and the height of the edge between the filter and the service area should be 1,100mm.

By-pass channel:

- The filter itself has only an auxiliary bypass!
- The basic function of this channel is cheaper and faster service of the filter.
- In the case of excessive flow or breakdown of the filter, water level in front of the filter rises quickly. This is signalled by water level sensors. For the lifespan of the filter it is not good for the drum to rotate with such quantity of water. It is, therefore, necessary to avoid water flow to the filter and to use a bypass facility.
- The bypass channel can be shut in two possible ways:
  - *Passive:* overflow edge
  - *Active:* manual or electrically controlled sluice gate which opens if there is an overflow or breakdown.
- It must be designed in such a way to have enough capacity to manage full bypass of the filter (battery). If there is an overflow edge, it must be designed in such a way to ensure smooth overflow and be long enough.

3/12/18

The inlet area and bypass channel should be covered by a grating.
If there is a danger of freezing, it is necessary to insulate the channel.

The standard delivery of the filter includes a sludge tank and a sludge pump, which is automatically activated by a water level sensor to empty the tank when it is full. There is also a possibility of gravitational discharge upon agreement with the sales representatives of our company.

The filter can be installed to the concrete channel into batteries (more filters for one inlet). Each filter operates independently but all the filters are set to one another to operate fully automatically. There can be only one switchboard for several filters. Each filter should have a service channel either together with another filter or separate.

All filters are equipped with a cover.

2. Installation into the steel tank

The filter can be used on an open area. The filter is connected by pipes. The diameters of the connections can be changed within a certain range. Standard connecting points for inlet and outlet are ended with flanges.

The standard delivery of this filter includes a sludge tank.
Sludge discharge can be done in two possible ways, which can be combined:

- Gravitational discharge, sludge is discharged by gravitational flow
- Sludge pump situated in the tank where sludge is pumped away.

The switchboard, if part of the delivery, is recommended to be positioned directly on the filter. It is necessary to ensure good access to the switchboard.

The filter should be installed in places where it does not freeze. If it is not possible to ensure this, the filter must be equipped with an insulated cover for the filter as well as the sludge tank. Normally, the filter is not insulated all.

Two types of water level sensors can be used for the filter:

- Contact:
  - Three sensors at the inlet of the filter (switch-on, switch-off and emergency)
  - Two sensors in the sludge tank (switch-on and switch-off)
  - It is possible to mechanically set levels by the sensors.

- Pressure:
  - Only one sensor at the inlet of the filter and in the sludge tank (2pcs in total)
  - The switchboard controlling these sensors includes PLC (logo siemens)
  - Levels can be easily set in the PLC.

In both cases level sensors must be cleaned of impurities (see the manual).

Installation of the filter

The filter, mainly when installed in the concrete channel, must be positioned in such a way so the water level on the influent side of the filter ranges within the limits (see the design drawings). The water level in the preliminary devices (secondary settling tank, flotation unit DAF,...) must be at least 100mm higher than maximum (emergency) level of the filter.

3/12/18

The flow of inlet water to the filter must be gradual, water must not splash or whirl or bounce off. Therefore, in the case of the filter to the concrete channel, it is necessary to have a stilling chamber (see the drawing). Another solution is to have inlet under the water level in front of the filter (water flows and does not splash). In the case of the filter installed in the steel tank, the solution is to have a stilling chamber placed in front of the filter.

It must be possible to stop the inlet to the filter (e.g. using a sluice gate) and empty the tank with the filter. The bypass of the filter can be equipped with an overflow edge (**of necessary length**!) or electric sluice gate.
Inlet water to the filter must be removed of impurities exceeding 10mm, sharp impurities, grit, fat and sticky substances.
Every filter produces sludge. The concrete filter usually contains a sludge tank from which the sludge is pumped by a sludge pump. The sizes of connecting points are given in the drawings. In the place of the installation of the filter the coupler for the sludge pump pipe must have a backflow valve. If there is a danger of freezing, the coupler must be insulated or heated. If there is a gravitational discharge pipe for sludge, it is necessary to prepare pipes for connection.

The filter can be equipped with a terminal board, free cables or cable bundle in the gooseneck. This cable line must be preset according to applicable standards as well as the position of the switchboards.

A lifting device for filter assembly must be prepared at the channel with the appropriate load (according to the type of the filter) so the filter can be set in the channel.

Type designation

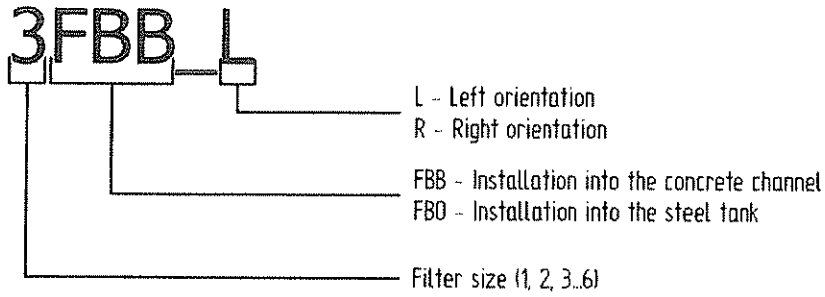

Note:the filter side orientation is established when looked at the filter from the side of the opening cover. When water flows through the filter from left to right, it is the right version and vice versa. (see the figure below)

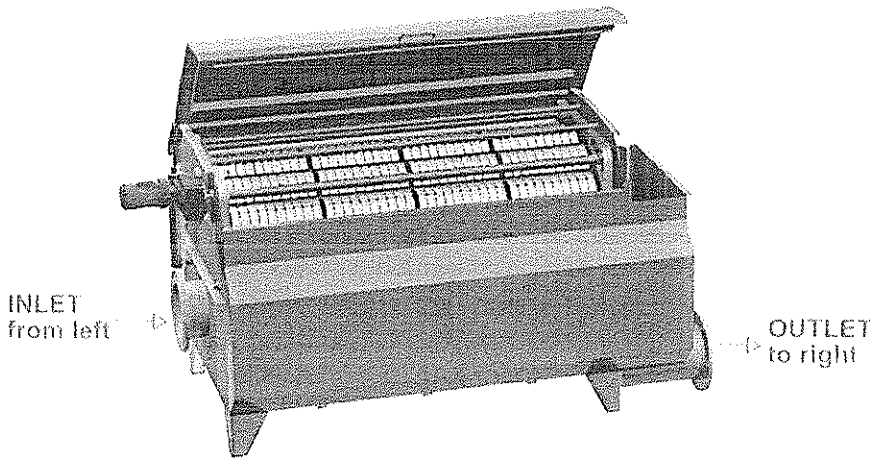

Right-hand model of the filter

3|12|18

Innovation of the filter drum

A new type of filter drum was developed in order to simplify replacement of filter cloth (now filter sections). This easy replacement makes the process faster and the service cost-efficient. Innovation of the filter sections also increases the life span and resistance of the filter cloth.

The size of the filter is given by the number of sections in a row and along the circumference of the filter drum (see Tab. 1)

FILTER TYPE	NUMBER OF SECTIONS IN ONE ROW	NUMBER OF ROWS	TOTAL NUMBER SECTIONS
1FBO	1	7	7
1FBB	1	7	7
2FBO	2	9	18
2FBB	2	9	18
3FBO	3	12	36
3FBB	3	12	36
4FBO	4	15	60
4FBB	4	15	60
5FBO	5	18	90
5FBB	5	18	90
6FBO	6	23	138
6FBB	6	23	138

Tab. 1

The installed section already contains the filter cloth and its replacement is done piece by piece using the "cli-clo" system.

Filter area of the drum

FILTER TYPE	FILTER AREA OF THE DRUM in m^2	APPLICABLE FILTER AREA OF THE DRUM in m^2
1FBO	0.728	0.416
1FBB		
2FBO	1.872	1.109
2FBB		
3FBO	3.744	2.392
3FBB		
4FBO	6.240	4.16
4FBB		
5FBO	9.360	6.24
5FBB		
6FBO	13.104	8.736
6FBB		

3/12/18

Tab. 2

The switchboard must be placed in such a way to enable a visual check of the operation of the filter. If the delivery includes a switchboard and assembly, IN-EKO representative must be informed of the location of the switchboard and cable line one week before the assembly!

Replacement of filter cloth using the "CLI-CLO" system:

- The filter cloth is attached to a plastic frame which constitutes a separate filter section, the same for all filter types. The number of filter sections to be replaced depends on the size of the filter.
- Replacement of filter sections is very easy, there are no fixtures or couplers.
- The lifespan of the filter cloth is considerably higher. The filter cloth can be made of polyamide or stainless steel.

3|12|18

Design drawings:

FBB

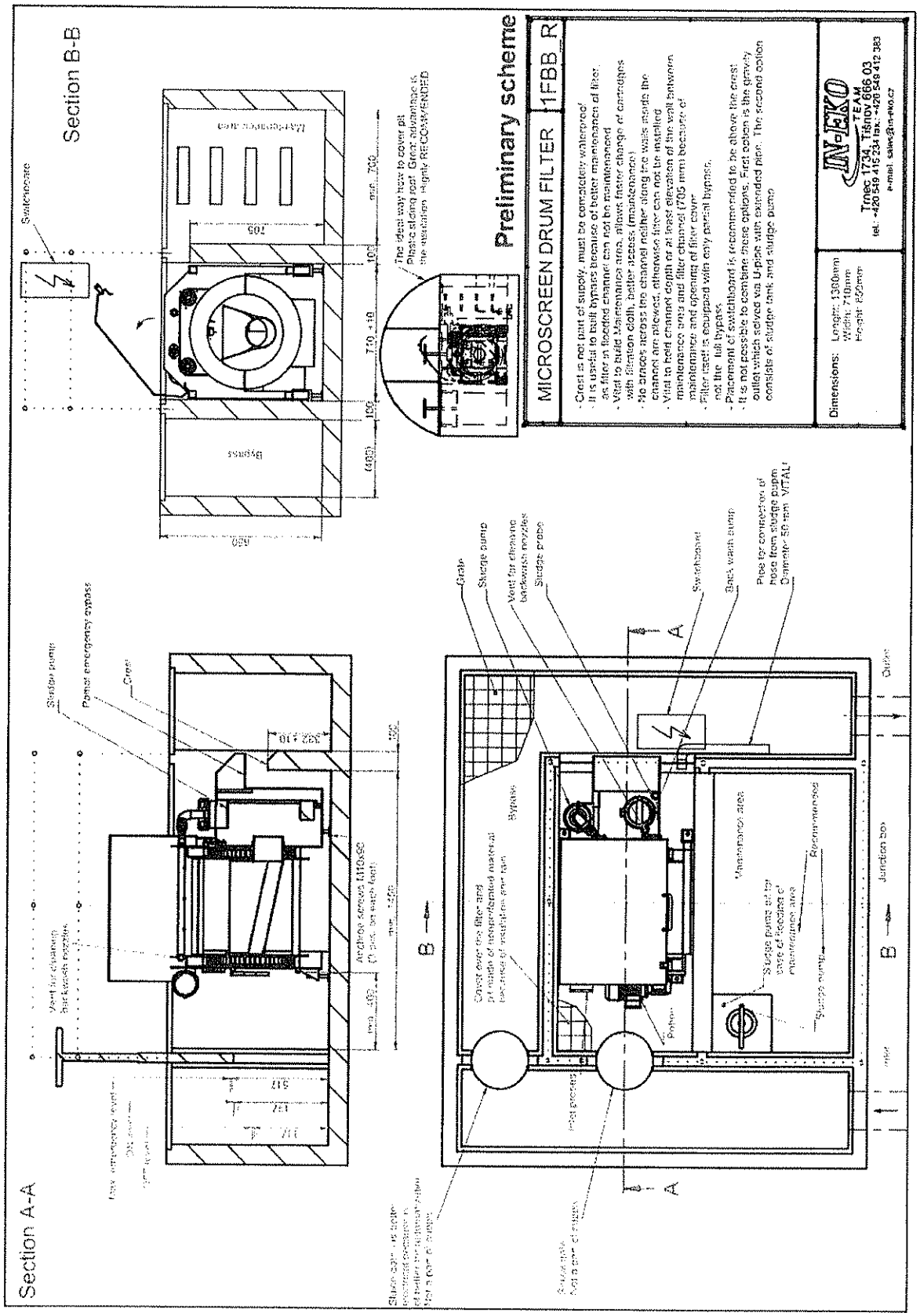

3/12/18

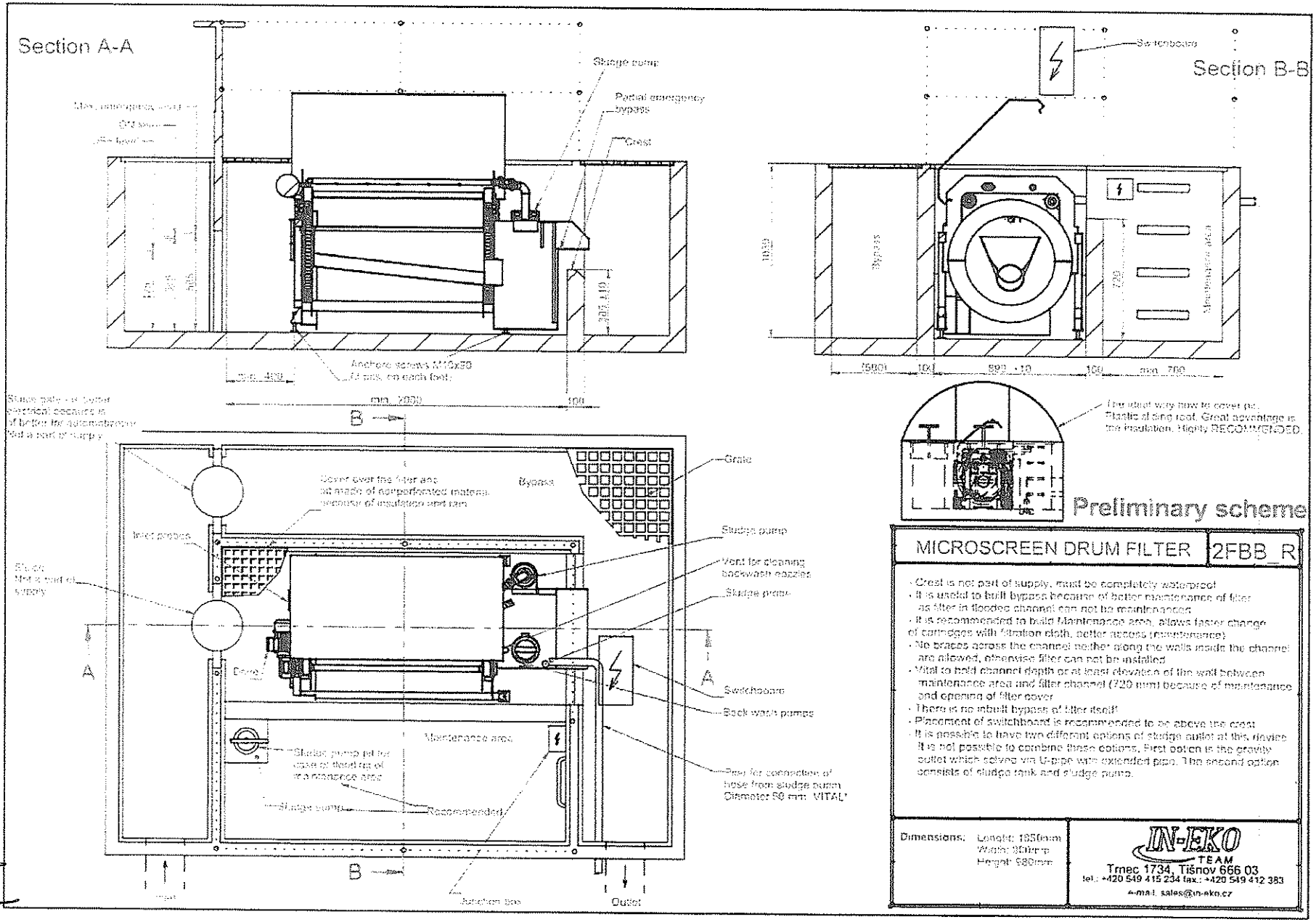
Section A-A
Sludge pump
Partial emergency bypass
Crest
Anchore screws M10x90
(4 pcs. on each foot)
min. 400
min. 2000
100
Section B-B
Switchboard
Bypass
Maintenance area
1030
720
(500)
100
min. 700
The ideal way how to cover pc. Plastic sliding roof. Great advantage is the insulation. Highly RECOMMENDED.
Preliminary scheme
Sluice gate - or better electrical because is of better for automatization. Not a part of supply
B
Cover over the filter and all made of nonperforated material because of insulation and rain
Bypass
Grate
Inlet probes
Sludge pump
Vent for cleaning backwash nozzles
Sludge probe
Sluice. Not a part of supply
A
Switchboard
Back wash pumps
Maintenance area
Sludge pump pit for case of flooding of maintenance area
Sludge pump
Recommended
Pipe for connection of hose from sludge pump. Diameter 90 mm. VITAL
Junction box
Outlet
MICROSCREEN DRUM FILTER
2FBB_R
- Crest is not part of supply, must be completely waterproof
- It is useful to built bypass because of better maintenance of filter as filter in flooded channel can not be maintenanced
- It is recommended to build Maintenance area, allows faster change of cartridges with filtration cloth, better access (maintenance)
- No braces across the channel neither along the walls inside the channel are allowed, otherwise filter can not be installed
- Vital to hold channel depth or at least elevation of the wall between maintenance area and filter channel (720 mm) because of maintenance and opening of filter cover
- There is no inbuilt bypass of filter itself!
- Placement of switchboard is recommended to be above the crest
- It is possible to have two different options of sludge outlet at this device. It is not possible to combine these options. First option is the gravity outlet which solves via U-pipe with extended pipe. The second option consists of sludge tank and sludge pump.
Dimensions: Lenght: 1850mm
Width: 800mm
Height: 980mm
IN-EKO TEAM
Trnec 1734, Tišnov 666 03
tel.: +420 549 415 234 fax.: +420 549 412 383
e-mail: sales@in-eko.cz

3/12/18

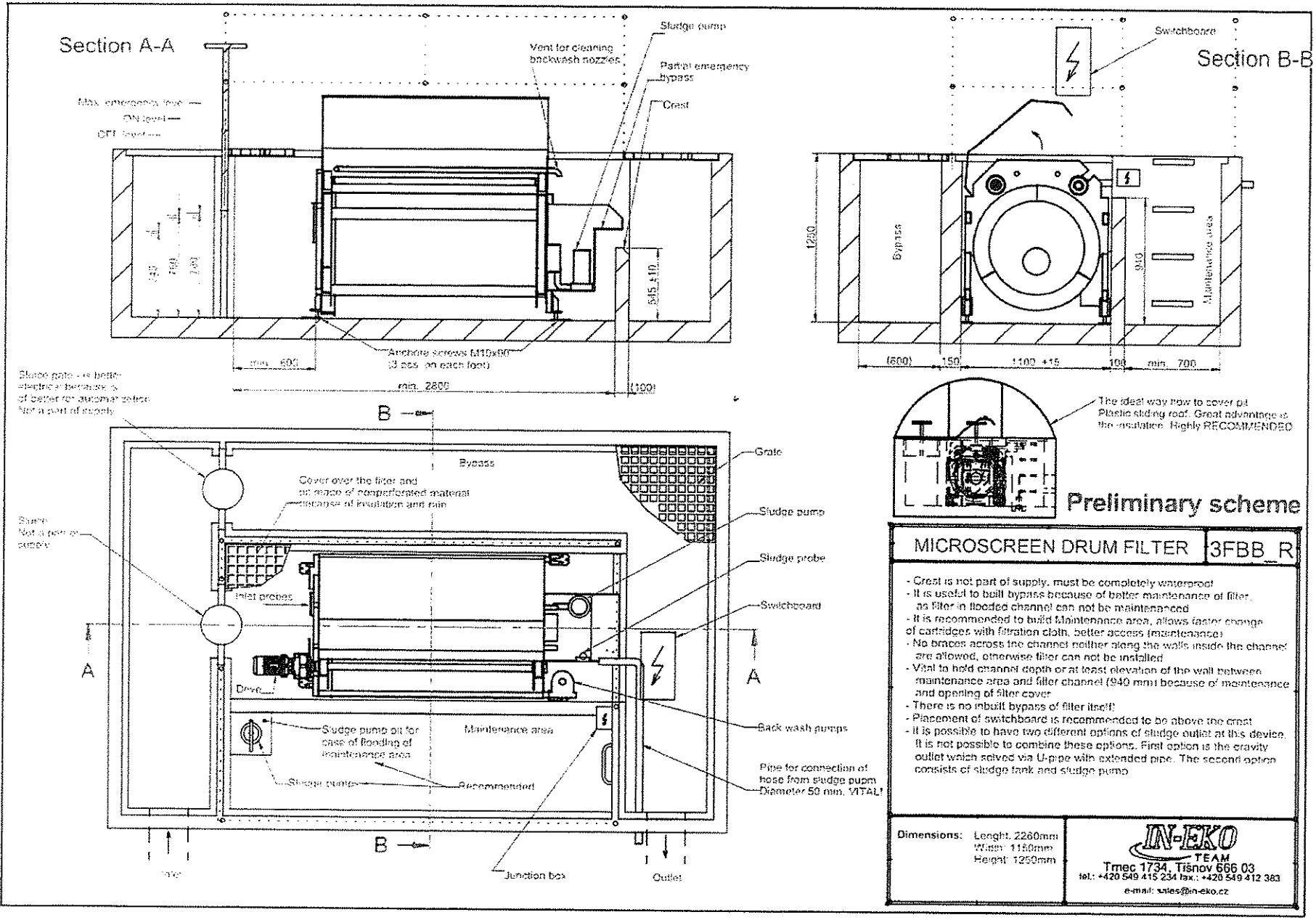
Section A-A
Max. emergency level
ON level
OFF level
Vent for cleaning backwash nozzles
Sludge pump
Partial emergency bypass
Crest
545 ±10
Anchore screws M10x90 (3 pcs. on each foot)
min. 600
min. 2800
(100)
Section B-B
Switchboard
1250
Bypass
940
Maintenance area
(600)
150
1100 +15
100
min. 700
The ideal way how to cover pit
Plastic sliding roof. Great advantage is the insulation. Highly RECOMMENDED
Preliminary scheme
Sludge gate - is better electrical because is of better for automatization
Not a part of supply
B
Bypass
Cover over the filter and pit made of nonperforated material because of insulation and rain
Grate
Sludge pump
Sludge probe
Switchboard
Inlet probes
A
Deve
Sludge pump pit for case of flooding of maintenance area
Maintenance area
Back wash pumps
Sludge pump
Recommended
Pipe for connection of hose from sludge pupm Diameter 50 mm. VITAL!
Junction box
Outlet
MICROSCREEN DRUM FILTER
3FBB_R
- Crest is not part of supply, must be completely waterproof
- It is useful to built bypass because of better maintenance of filter, as filter in flooded channel can not be maintenanced
- It is recommended to build Maintenance area, allows faster change of cartridges with filtration cloth, better access (maintenance)
- No braces across the channel neither along the walls inside the channel are allowed, otherwise filter can not be installed
- Vital to hold channel depth or at least elevation of the wall between maintenance area and filter channel (940 mm) because of maintenance and opening of filter cover
- There is no inbuilt bypass of filter itself!
- Placement of switchboard is recommended to be above the crest
- It is possible to have two different options of sludge outlet at this device. It is not possible to combine these options. First option is the gravity outlet which solved via U-pipe with extended pipe. The second option consists of sludge tank and sludge pump
Dimensions: Lenght: 2260mm
Width: 1150mm
Height: 1250mm
IN-EKO TEAM
Trnec 1734, Tišnov 666 03
tel.: +420 549 415 234 fax.: +420 549 412 383
e-mail: sales@in-eko.cz

3/12/18

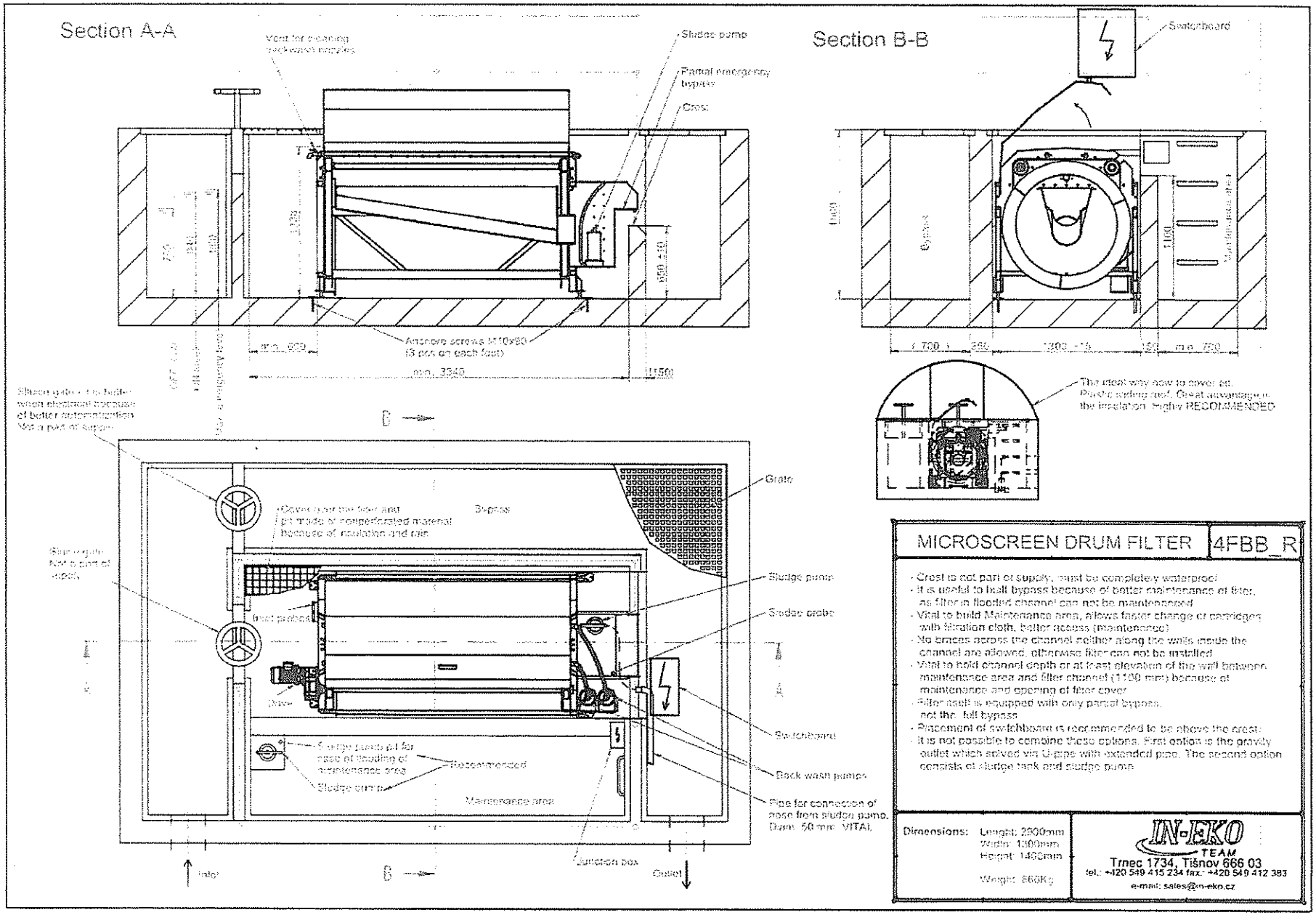
Section A-A
Vent for cleaning backwash nozzles
Sludge pump
Partial emergency bypass
Crest
Anchore screws M10x80 (3 pcs on each foot)
min. 3340
Section B-B
Switchboard
Bypass
Maintenance area
The ideal way now to cover pit. Plastic siding roof. Great advantage is the insulation. Highly RECOMMENDED
Sluice gate - it is better when electrical because of better automatization. Not a part of supply
Cover over the filter and pit made of nonperforated material because of insulation and rain
Bypass
Grate
Sludge pump
Sludge probe
Inlet probes
Drive
Sludge pump pit for case of flooding of maintenance area
Recommended
Sludge pump
Maintenance area
Switchboard
Back wash pumps
Pipe for connection of hose from sludge pump. Diam. 50 mm. VITAL
Junction box
Inlet
Outlet
MICROSCREEN DRUM FILTER
4FBB_R
- Crest is not part of supply, must be completely waterproof
- It is useful to built bypass because of better maintenance of filter, as filter in flooded channel can not be maintenanced
- Vital to build Maintenance area, allows faster change of cartridges with filtration cloth, better access (maintenance)
- No braces across the channel neither along the walls inside the channel are allowed, otherwise filter can not be installed
- Vital to hold channel depth or at least elevation of the wall between maintenance area and filter channel (1100 mm) because of maintenance and opening of filter cover
- Filter itself is equipped with only partial bypass, not the full bypass
- Placement of switchboard is recommended to be above the crest
- It is not possible to combine these options. First option is the gravity outlet which solved via U-pipe with extended pipe. The second option consists of sludge tank and sludge pump
Dimensions: Lenght: 2900mm Width: 1300mm Height: 1400mm
Weight: 860Kg
IN-EKO TEAM
Trnec 1734, Tišnov 666 03
tel.: +420 549 415 234 fax.: +420 549 412 383
e-mail: sales@in-eko.cz

3/12/18

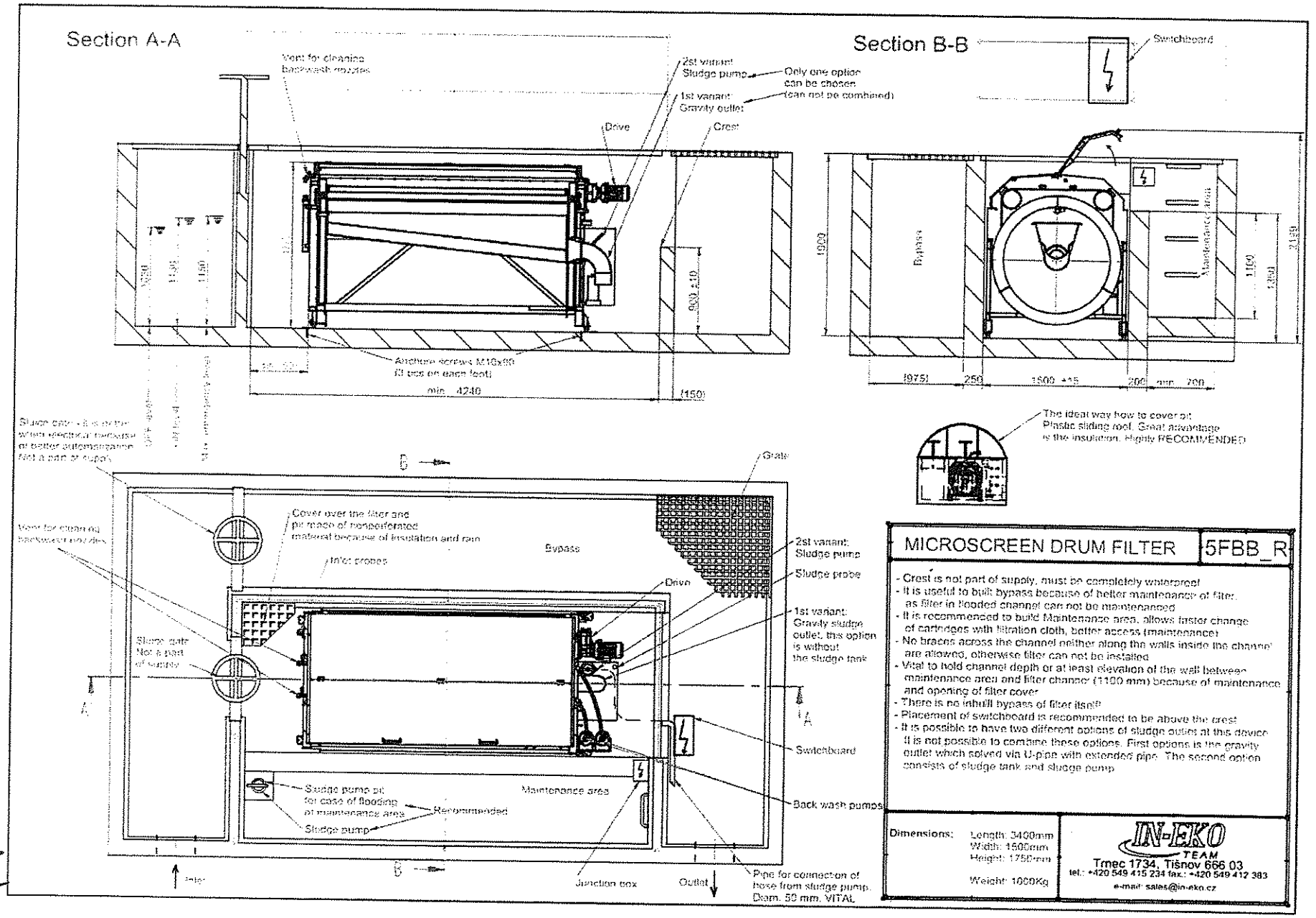

MICROSCREEN DRUM FILTER	5FBB_R

- Crest is not part of supply, must be completely waterproof
- It is useful to built bypass because of better maintenance of filter, as filter in flooded channel can not be maintenanced
- It is recommenced to build Maintenance area, allows faster change of cartridges with filtration cloth, better access (maintenance)
- No braces across the channel neither along the walls inside the channel are allowed, otherwise filter can not be installed
- Vital to hold channel depth or at least elevation of the wall between maintenance area and filter channel (1180 mm) because of maintenance and opening of filter cover
- There is no inbuilt bypass of filter itself
- Placement of switchboard is recommended to be above the crest
- It is possible to have two different options of sludge outlet at this device. It is not possible to combine these options. First option is the gravity outlet which solved via U-pipe with extended pipe. The second option consists of sludge tank and sludge pump

Dimensions:	Length: 3400mm Width: 1500mm Height: 1750mm Weight: 1000Kg

IN-EKO TEAM
Trnec 1734, Tišnov 666 03
tel.: +420 549 415 234 fax.: +420 549 412 383
e-mail: sales@in-eko.cz

3/12/18

Section A-A

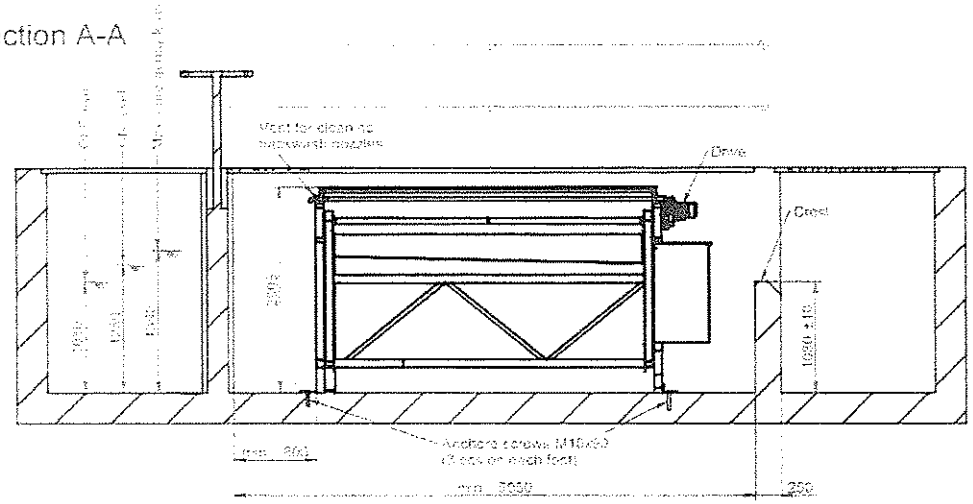

Section B-B

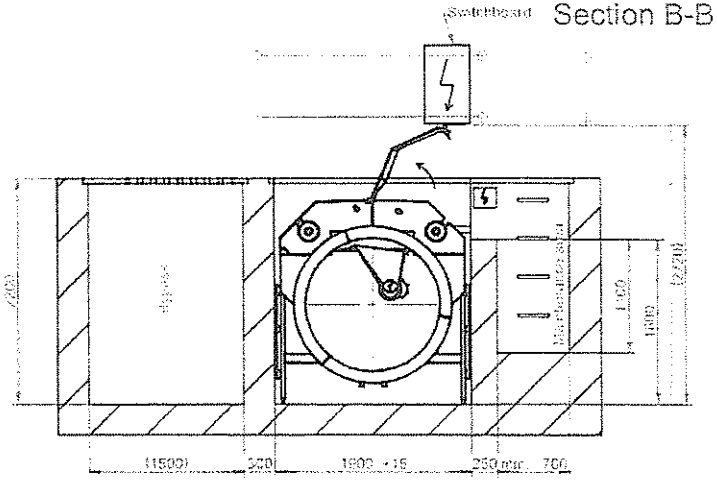

The most way how to cover pit
Plastic sliding roof. Great advantage
is the insulation. Highly RECOMMENDED

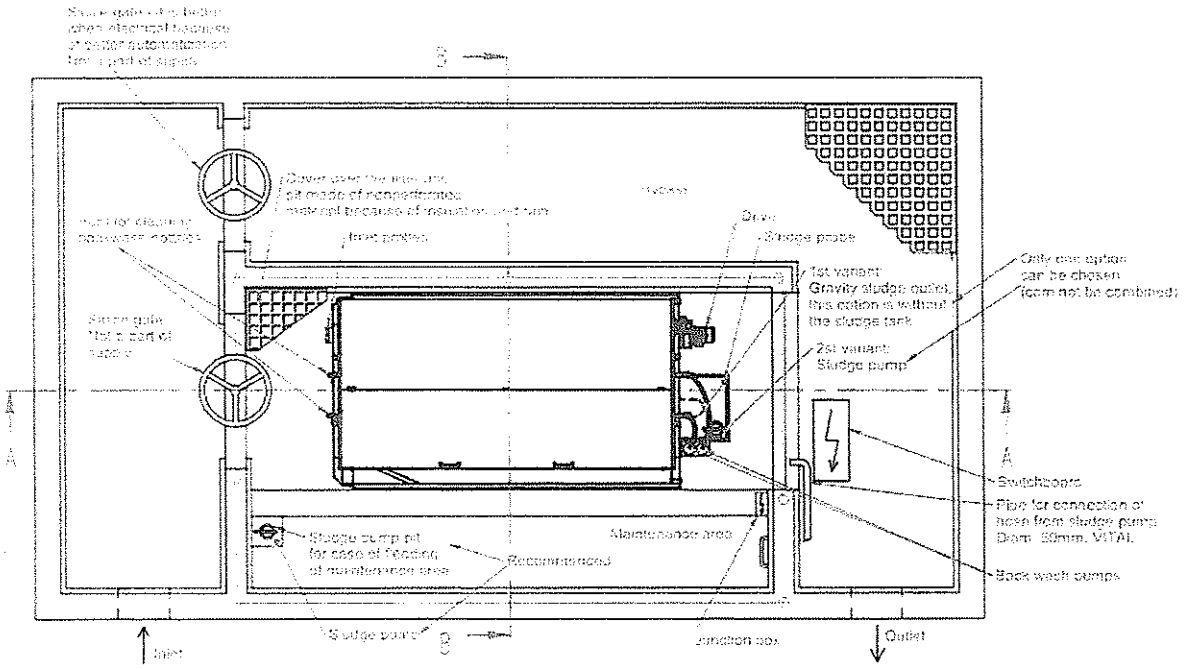

MICROSCREEN DRUM FILTER	6FBB_R

- Crest is not part of supply, must be completely waterproof
- It is useful to built bypass because of better maintenance of filter as filter in floorded channel can not be maintenanced
- It is recommended to build Maintenance area, allows faster change of cartridges with filtration cloth, better access (maintenance)
- No braces across the channel neither down the walls inside the channel are allowed, otherwise filter can not be installed
- Vital to hold channel depth or at least elevation of the wall between maintenance area and filter channel (1100 mm) because of maintenance and opening of filter cover
- There is no inbuilt bypass of filter itself!
- Placement of switchboard is recommended to be above the crest
- It is possible to have two different options of sludge outlet at this device. It is not possible to combine these options. First option is the gravity outlet which served via U-pipe with extended pipe. The second option consists of sludge tank and sludge pump

IN-EKO TEAM
Trnec 1734, Tišnov 666 03
tel. +420 549 415 234 fax: +420 549 412 383
e-mail: sales@in-eko.cz

IN-EKO TEAM

3/12/18

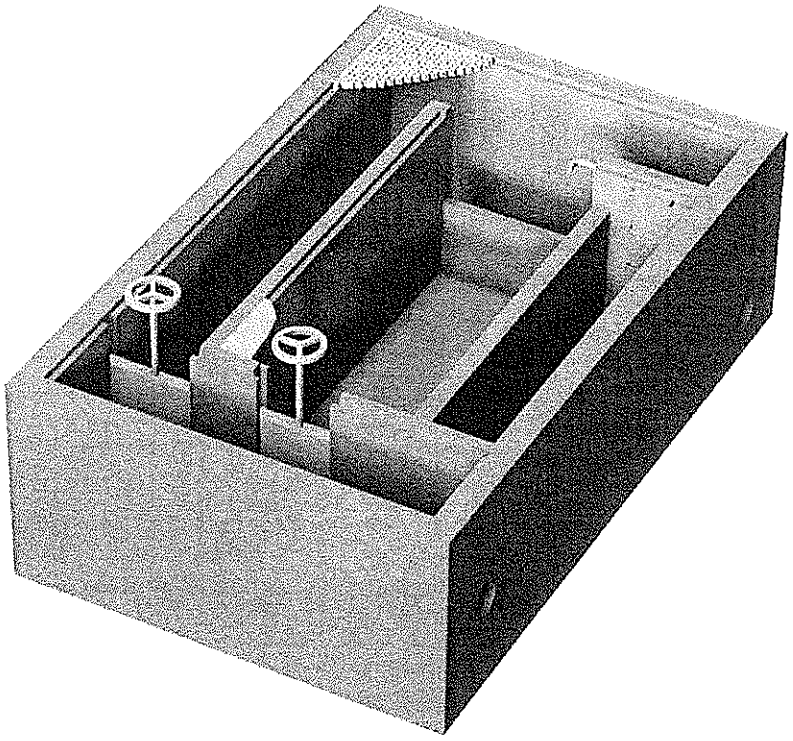

Fig. 1 – Channel - model

REZ

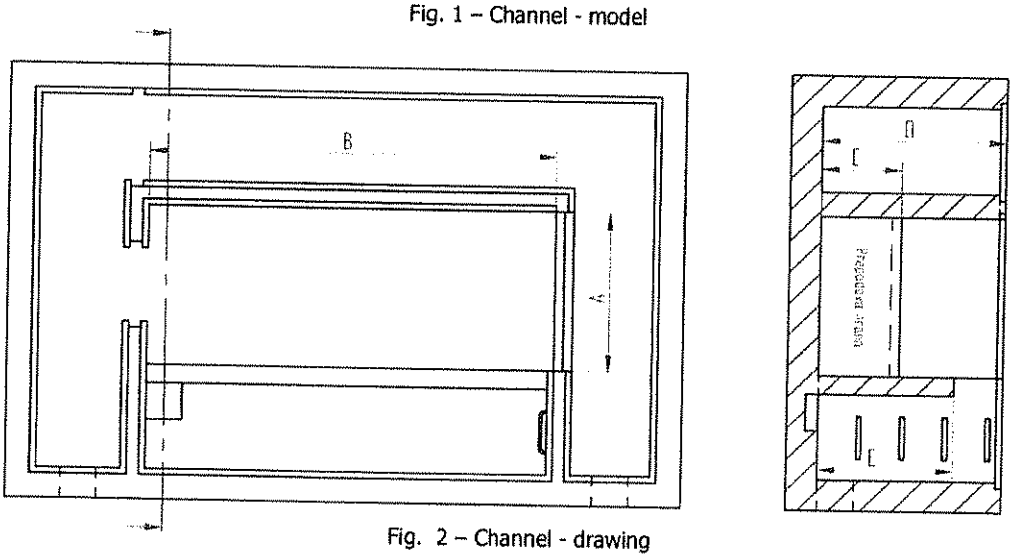

Fig. 2 – Channel - drawing

FILTER TYPE	A [mm]	B [mm]	C [mm]	D [mm]	E [mm]
1FBB	710	1450	332	850	705
2FBB	890	2000	385	1030	720
3FBB	1100	2800	545	1250	940
4FBB	1300	3340	650	1500	1100
5FBB	1500	4240	900	1900	1100
6FBB	1900	5050	1080	2200	1100

Tab. 4

3/12/18

Working platform:

If the filter design does not enable to build a service channel (e.g. due to insufficient space), it is possible to use a working platform, which can be supplied together with the filter upon agreement with the IN-EKO representative. It is a stainless steel platform which enables better access to the filter, which is set deep in the channel.

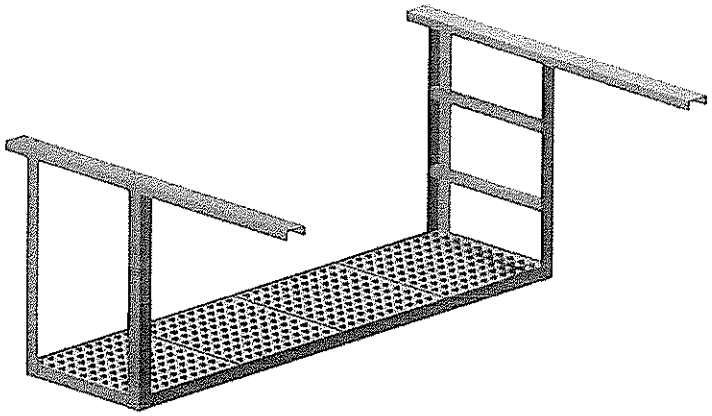

Fig. 3 – Working platform

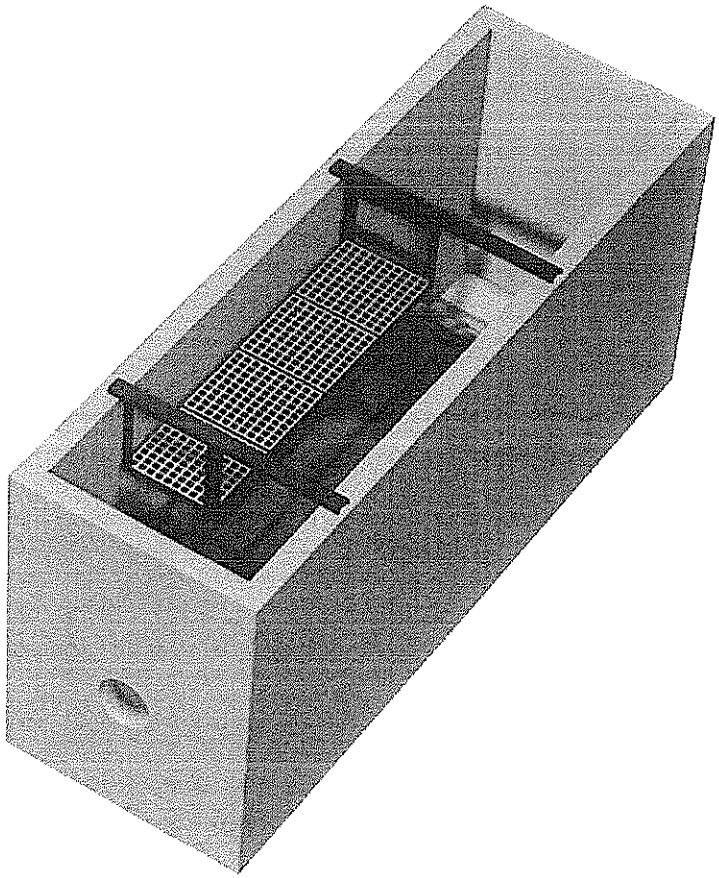

Fig. 4 – Working platform in the channel

3|12|18

FBO

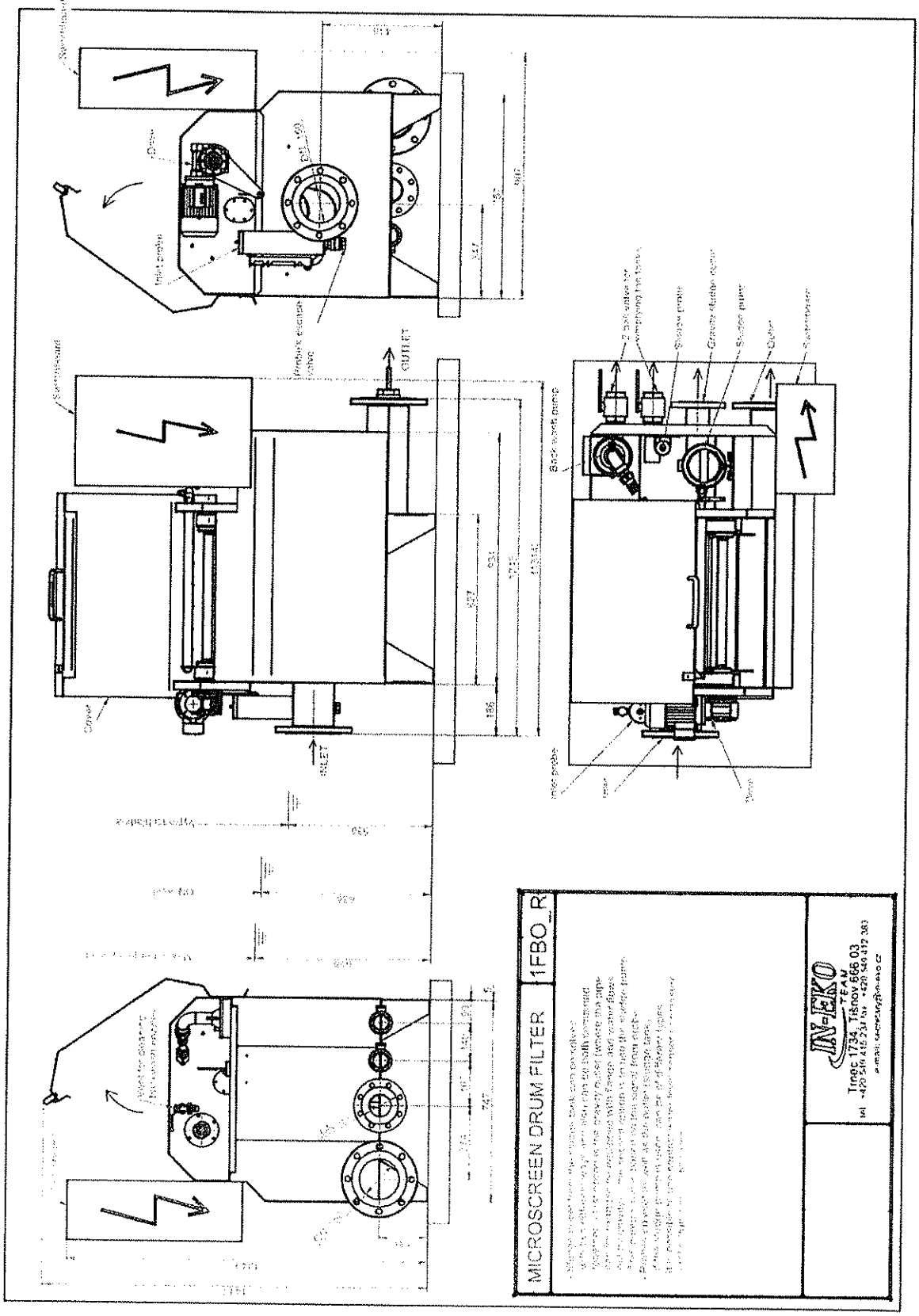

3/12/18

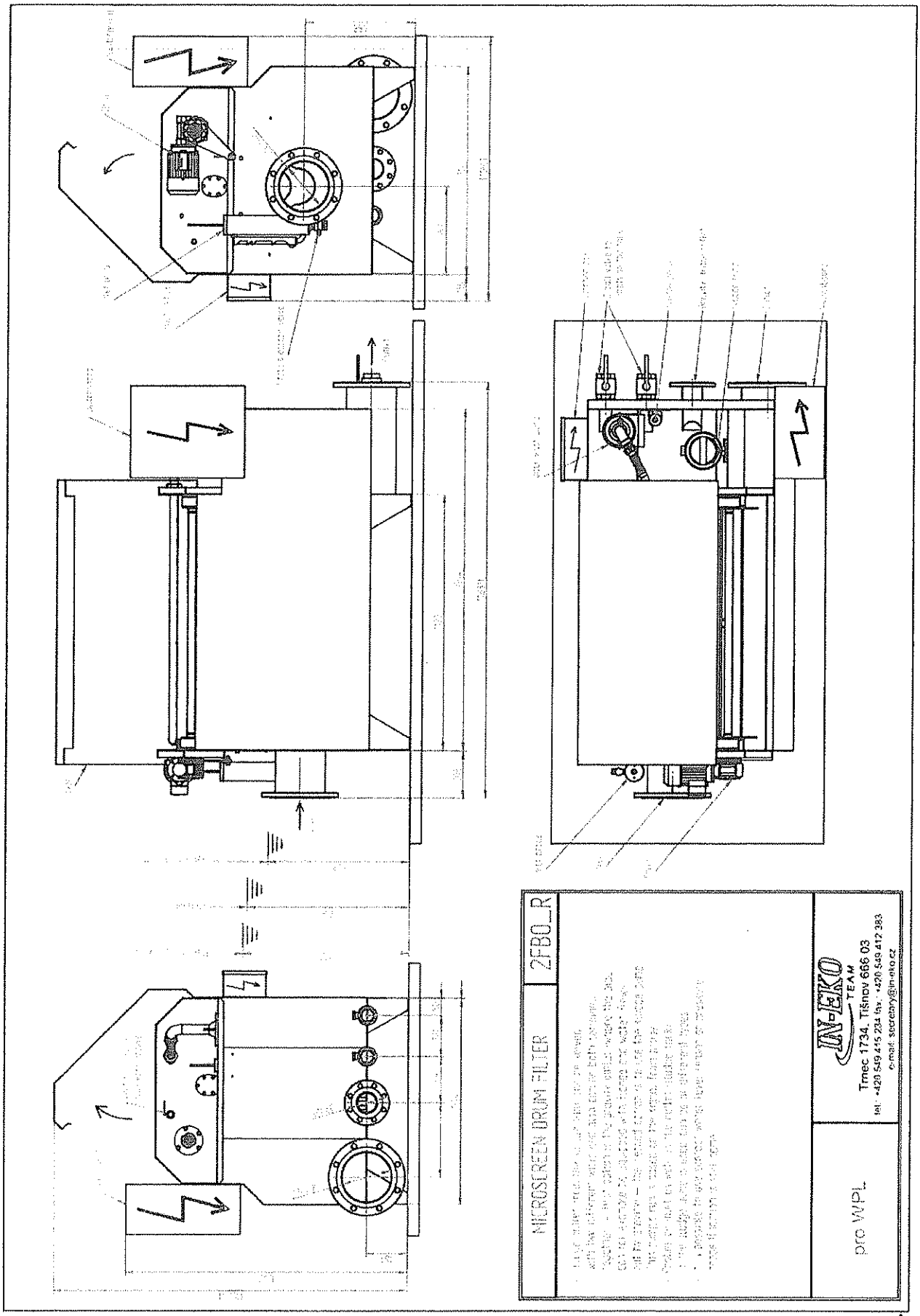
MICROSCREEN DRUM FILTER
2FBO_R
pro WPL
IN-EKO TEAM
Trnec 1734, Třinec 666 03
tel.: +420 549 415 234 fax.: +420 549 412 383
e-mail: sterany@in-eko.cz

3/12/18

MICROSCREEN DRUM FILTER | 3FBO_R

IN-EKO
TEAM
Trnec 1734, Třinov 666 03
tel.: +420 549 415 234 fax: +420 549 412 383
e-mail: secretary@in-eko.cz

3/12/18

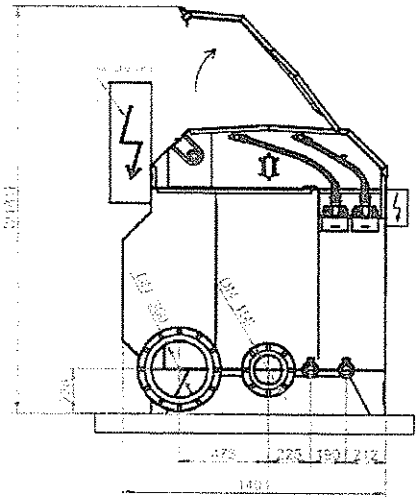

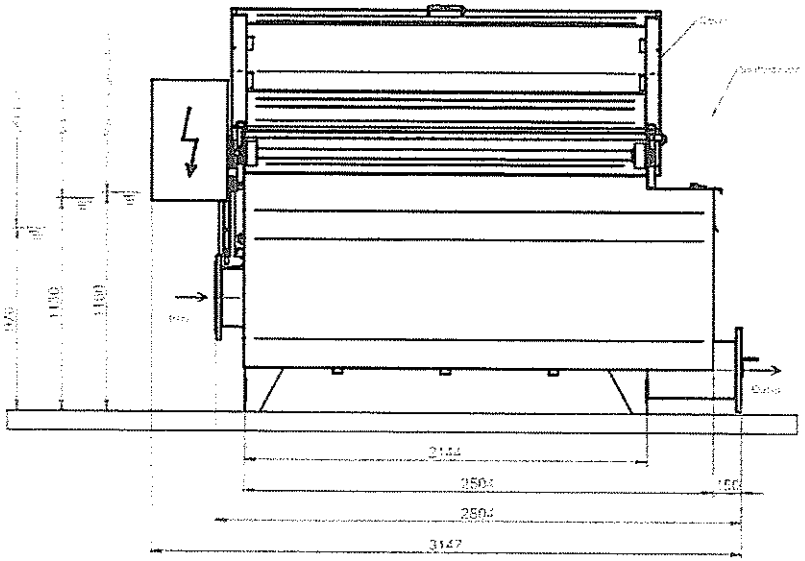

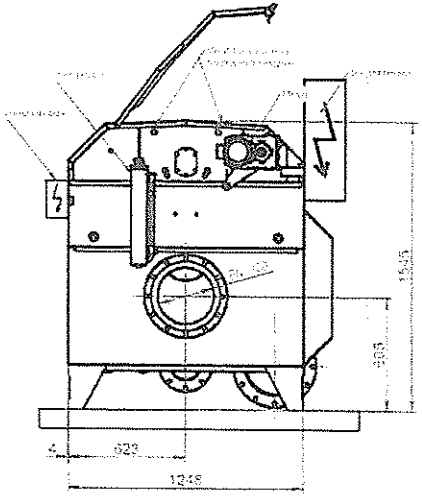

MICROSCREEN DRUM FILTER	4FBO_R

- Sludge outlet from the sludge tank can be solved with two different ways and also can be both command together. - first option is the gravity outlet (where the pipe can for example be equipped with sample and water flows out by gravity). - the second option is to use the sludge pump. The pump s run is based on the signal from probe.
- Probes on inlet as well as the outlet (sludge tank), if the sludge pump is used, can be of different types. - It is possible to use contact water level sensor or pressure probe (function is still same)

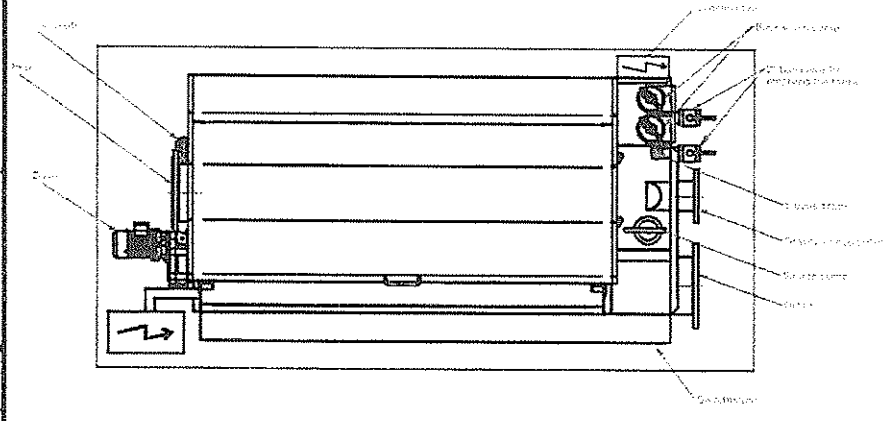

IN-EKO TEAM
Trnec 1734, Tišnov 666 03
tel.: +420 549 415 234 fax.: +420 549 412 383
e-mail: secretary@in-eko.cz

IN-EKO

3/12/18

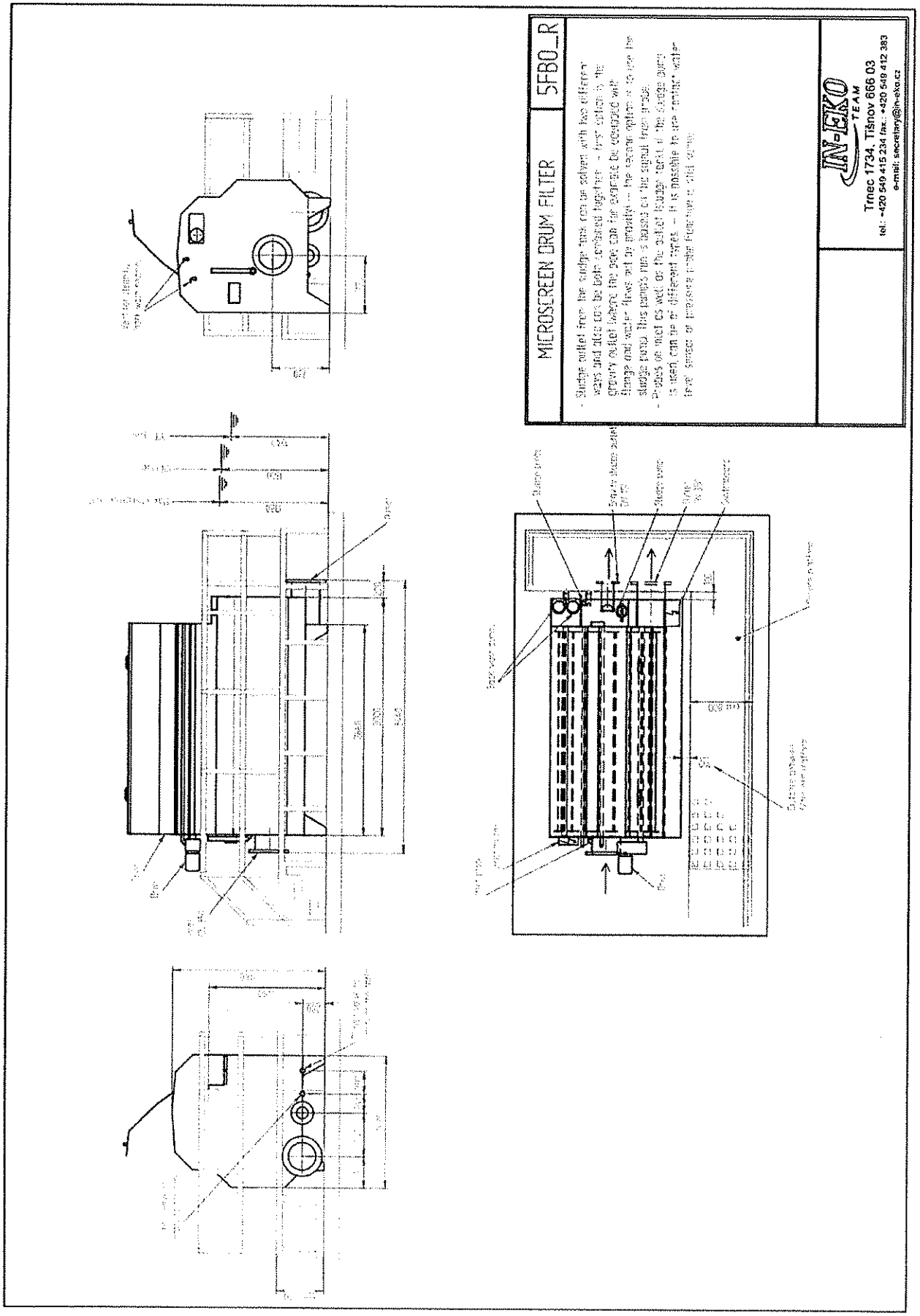
MICROSCREEN DRUM FILTER
SFBO_R
IN-EKO TEAM
Trnec 1734, Tišnov 666 03
tel.: +420 549 415 234 fax.: +420 549 412 383
e-mail: secretary@in-eko.cz

3/12/18

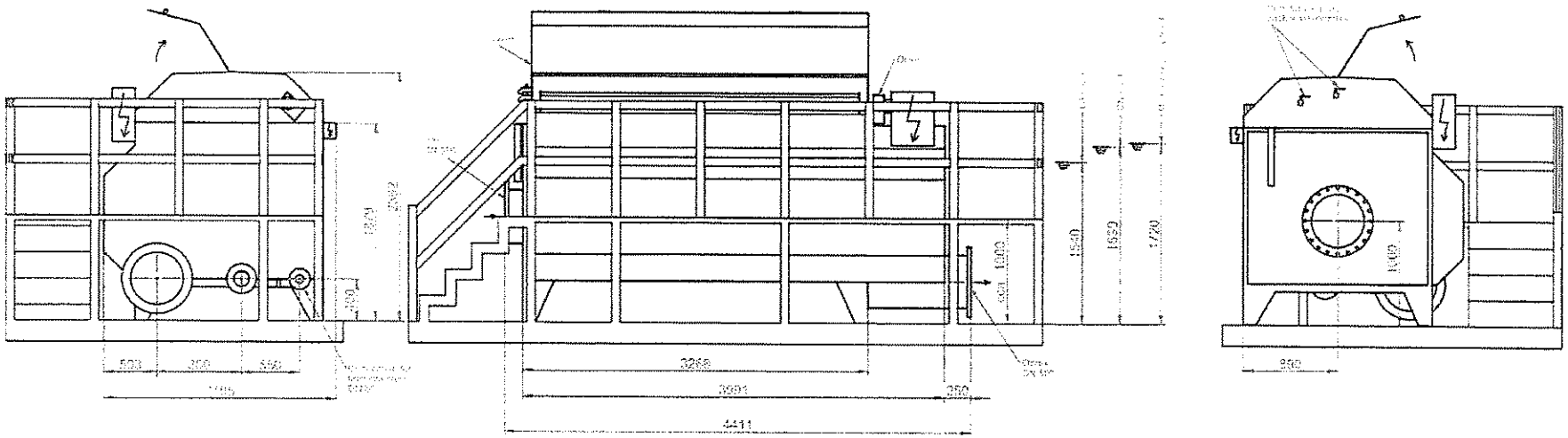

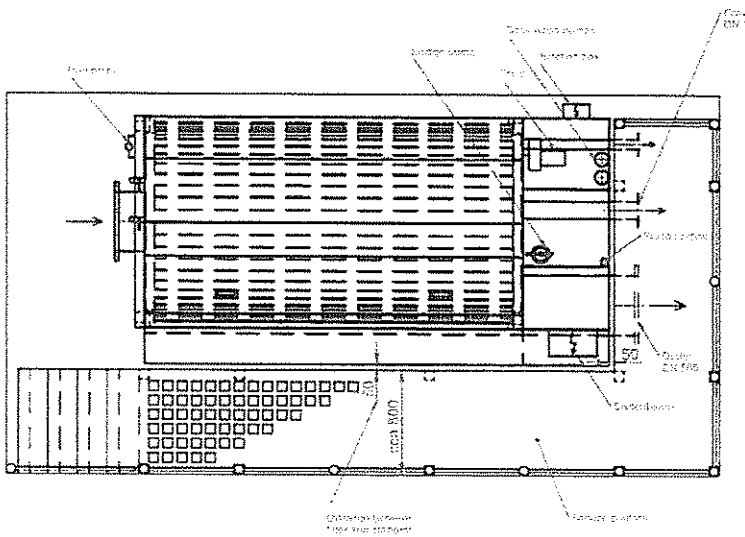

MICROSCREEN DRUM FILTER | 6FBO_R

- Sludge outlet from the sludge tank can be solved with two different ways and also can be both combined together - first option is the gravity outlet (where the pipe can for example be equipped with flange and water flows out by gravity) – the second option is to use the sludge pump. This pump's run is based on the signal from probe.
- Probes on inlet as well as the outlet (sludge tank), if the sludge pump is used, can be of different types – It is possible to use contact water level sensor or pressure probe (function is still same)

IN-EKO TEAM
Trnec 1734, Tišnov 666 03
tel.: +420 549 415 234 fax.: +420 549 412 363
e-mail: secretary@in-eko.cz

IN-EKO TEAM

3/12/18

Dimension chart of steel filters

FILTER TYPE	LENGTH [mm]	WIDTH [mm]	HEIGHT [mm]
1FBO	1330	910	1360
2FBO	1840	1170	1260
3FBO	2660	1380	1490
4FBO	3130	1560	1600
5FBO	3450	1680	1950
6FBO	4420	2080	2370

Tab. 3

Mounting ramp, shown in the drawing for 5FBO and 6FBO filters is not part of the delivery. This ramp (platform) can be made and supplied with the filter upon an agreement with the IN-EKO representative.

Connecting sizes for filter inlet and outlet in the steel tank:

FILTER TYPE	INLET [DN]	OUTLET OF PRETREATED WATER [DN]	OUTLET FROM SLUDGE TANK [DN]	DISCHARGE VALVE OF THE TANK ["]
1FBO	150	150	80	2
2FBO	200	200	80	2
3FBO	250	250	150	2
4FBO	300	300	150	2
5FBO	350	350	150	2
6FBO	500	500	150	2

Tab. 4

3/12/18

Dimensions of switchboards and their stands

A stand for a switchboard is necessary if the switchboard is not positioned directly on the filter or on the wall next to it, but e.g. on the floor near the filter or directly on the concrete channel. Figures 3-5 show the recommended shapes of stands for the switchboards. Fig. 6 a 7 show 2 standards types of switchboards for our filters. One is for a filter with pressure sensors and the other for a filter with contact sensors.

Stands for switchboards:

If mounted on the concrete channel:

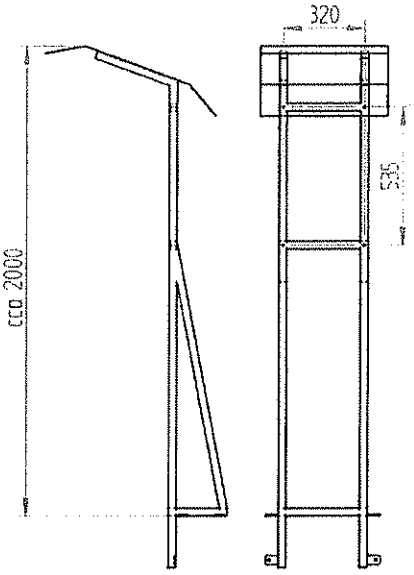

Fig. 3 – for a filter with contact sensor

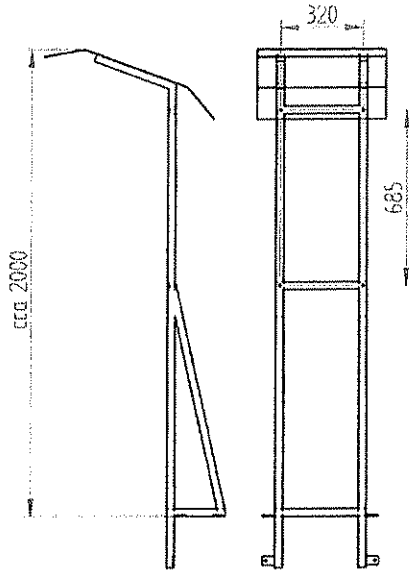

Fig. 4 – for filter with a pressure sensor

If mounted on the floor:

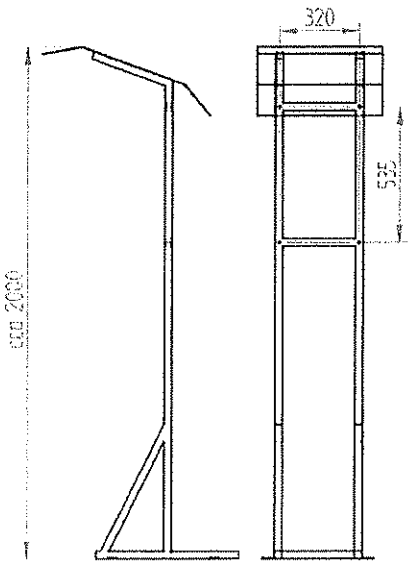

Fig. 4 – filter with a contact sensor

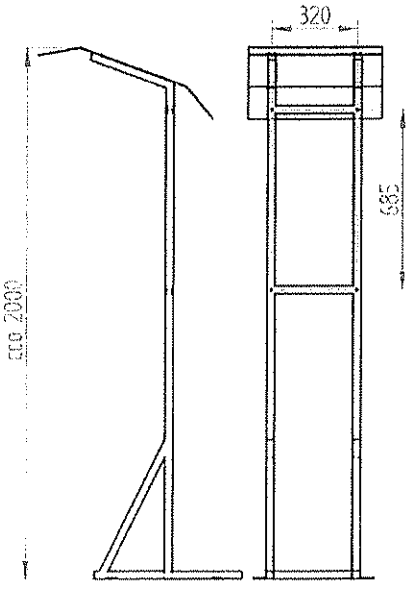

Fig. 5 – filter with a pressure sensor

3|12|18

Standard switchboards:

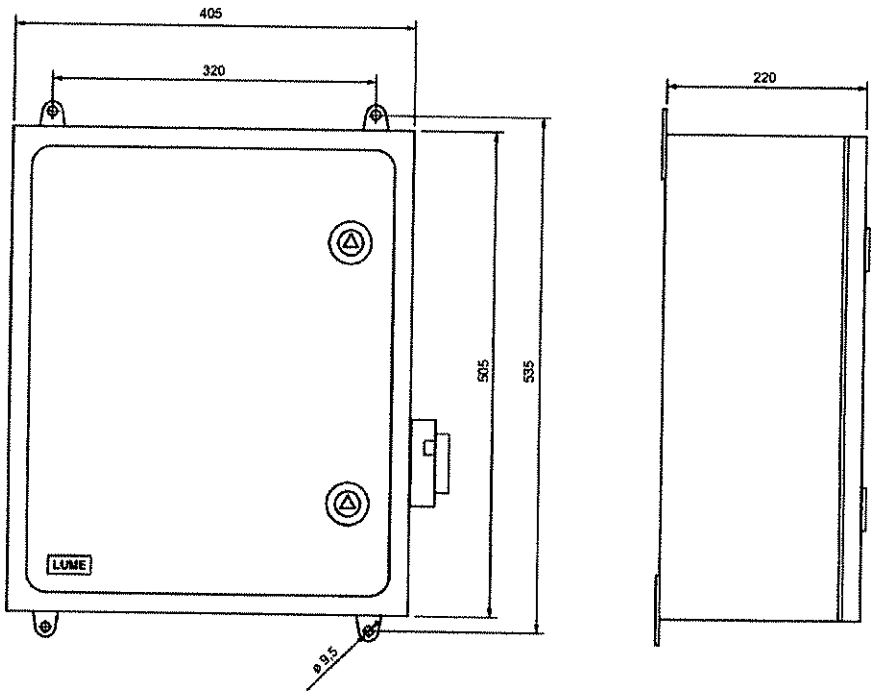

Fig. 6 – switchboard for filter with a contact sensor

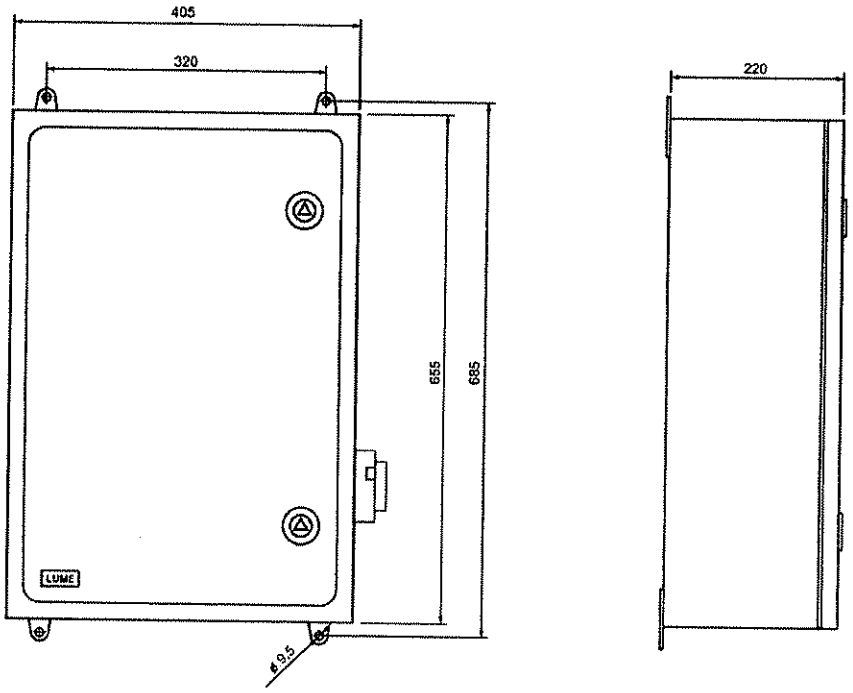

Fig. 7 – switchboard for filter with a pressure sensor

3/12/18

Contacts

IN-EKO TEAM s.r.o.
Trnec 1734
666 03 Tišnov, Czech Republic

WWW.IN-EKO.CZ

Secretary
Tel.: +420 549 415 234
+420 549 415 589
+420 549 411 149
Fax.: +420 549 412 383
Email: secretary@in-eko.cz

Executive Manager
Eva Komárková
GSM: +420 777 744 977
Email: eva.komarkova@in-eko.cz

Sales department
Ing. Zuzana Sadílková
GSM: +420 777 744 974
Email: trade@in-eko.cz

Ing. Jan Bednář
GSM: +420 777 744 552
Email: project@in-eko.cz

Aleš Vaverka
GSM: +420 775 852 211
Email: sales@in-eko.cz

Production and service
Luděk Halouzka
GSM: +420 777 745 146
Email: help@in-eko.cz

3/12/18

BUREAU VERITAS
Certification

Certifikát

udělený organizaci

IN - EKO Team s.r.o.

Sídlo: Zatloukalova 172/4, Ivanovice, Brno
Provozovna: Tišnov, Trnec 1734
Česká republika

Bureau Veritas Certification Holding SAS – UK Branch tímto osvědčuje, že systém managementu výše uvedené organizace byl posouzen a shledán ve shodě s požadavky následující systémové normy:

Norma

ISO 9001:2008

Oblast certifikace
(Oblast certifikace je platná pouze pro provozovnu)

NÁVRH, VÝVOJ, VÝROBA, PRODEJ A SERVIS ZAŘÍZENÍ PRO ČIŠTĚNÍ ODPADNÍCH VOD. PROVÁDĚNÍ ZÁMEČNICKÝCH PRACÍ.

Počáteční datum certifikačního cyklu: 16. ZÁŘÍ 2016

Tento certifikát platí – za předpokladu následného uspokojivého udržování funkčnosti systému managementu do: 15. ZÁŘÍ 2018

Datum počátečního schválení: 30. ZÁŘÍ 2004

Číslo certifikátu: CZ005250-1/A

Verze 1, Datum revize: 16. ZÁŘÍ 2016

Podepsáno jménem BVCH SAS UK Branch

UKAS MANAGEMENT SYSTEMS
008

Certification body address: 66 Prescot Street, London E1 8HG, United Kingdom
Local office: BUREAU VERITAS CZECH REPUBLIC, spol. s r.o., Olbrachtova 1, 140 02 Praha 4, Czech Republic

Další vysvětlení týkající se rozsahu tohoto certifikátu a aplikovatelnosti požadavků systému řízení lze získat na základě konzultace s organizací
Pro ověření platnosti certifikátu volejte: +420 210 088 215

3/12/18

BUREAU VERITAS
Certification

Certification

Awarded to

IN - EKO Team s.r.o.

Registered address: Zatloukalova 172/4, Ivanovice, Brno
Site: Tišnov, Trnec 1734
Czech Republic

Bureau Veritas Certification Holding SAS – UK Branch certifies that the Management System of the above organisation has been audited and found to be in accordance with the requirements of the management system standard detailed below:

Standard

ISO 9001:2008

Scope of supply
(The scope of supply is valid only for site)

DESIGN, DEVELOPMENT, PRODUCTION, SALE AND SERVICE OF DEVICES FOR TREATMENT OF WASTEWATER. PURSUANCE OF LOCKSMITH WORK.

Certification cycle start date: 16th SEPTEMBER 2016

Subject to the continued satisfactory operation of the organisation's Management System, this certificate expires on: 15th SEPTEMBER 2018

Original certification date: 30th SEPTEMBER 2004

Certificate number: CZ005250-1/A

Version 1, Revision date: 16th SEPTEMBER 2016

Signed on behalf of BVCH SAS UK Branch

UKAS MANAGEMENT SYSTEMS
008

Certification body address: 66 Prescot Street, London E1 8HG, United Kingdom
Local office: BUREAU VERITAS CZECH REPUBLIC, spol. s r.o., Olbrachtova 1, 140 02 Praha 4, Czech Republic

Further clarifications regarding the scope of this certificate and the applicability of the management system requirements may be obtained by consulting the organisation. To check this certificate validity please call: +420 210 088 215

3/12/18

Reference list of Microscreen drum filter

ALL FOR WATER	IN-EKO	YEAR 2015		
No.	**COUNTRY**	**PLACE OF INSTALATION**	**TYPE**	**Pc.**
1218	USA	WWTP USA	5_BMF_5_O	1
1216-1217	New Zeland	WWTP New Zeland	5FBO	2
1214-1215	Slovakia	WWTP Modra	4FBB_R_L	2
1213	Poland	WWTP Suloszowa	3FBB_R	1
1212	Russia	brewery Vladivostok	3FBO_L	1
1211	Slovakia	WWTP Poltár	4FBB	1
1210	Czech Republic	WWTP Jedovnice	2FBB	1
1208-1209	Czech Republic	WWTP Šurany	4FBB	2
1207	Ireland	WWTP Camara	2FBO_R	1
1205-1206	Norway	cruise ship	3FBO_atyp	2
1203-1204	Slovakia	WWTP Prievidza	6FBB	2
1201-1202	Norway	cruise ship	2FBO_atyp	2
1200	Hungary	WWTP Turkeve	4FBB_R	1
1197-1199	Hungary	WWTP Kethely	4FBO_R	3
1196	Hungary	WWTP Újhartyán-Kakucs	3FBB	1
1195	Czech Republic	WWTP Vysoká	1FBB	1
1194	Czech Republic	WWTP Bojanov	5_BMF_10_B2	1
1193	Hungary	WWTP Szikszo	2FBO_R	1
1192	Czech Republic	WWTP Běrunice	5_BMF_10_B2	1
1190-1191	Croatia	WWTP Mali Loščinj	6FBB_R/L	2
1189	Czech Republic	WWTP Ždánice	1FBB	1
1188	Czech Republic	WWTP Dolany	1FBB_R	1
1187	Czech Republic	WWTP Vranov nad Dyjí	1FBB	1
1186	Czech Republic	WWTP Zdiměřice u Prahy	2FBB	1
1184-1185	Slovakia	WWTP Moldava nad Bodvou	4FBB	2
1183	Slovakia	WWTP Bodva	5_BMF_13_B2	1
1182	Slovakia	WWTP Půchov	2FBO	1
1181	Great Britain	WWTP UK	5FBO_R	1
1179	Czech Republic	WWTP Ligary	3FBB	1
1178	Czech Republic	WWTP Bílá Lhota	1FBO	1
1177	Hungary	WWTP Soltvadkert	3FBB_L	1
1175-1176	Iran	WWTP Isfahan	6FBB	2
1173	Czech Republic	WWTP Městec Králové	4FBB_R	1
1171-1172	Czech Republic	WWTP Poděbrady	4FBB_R_L	2
1170	Czech Republic	WWTP Ivanovice na Hané	3FBB_L	1
1168	Czech Republic	WWTP Dolní Dobrouč	2FBB	1
1167	Czech Republic	WWTP Střítež	1FBB_R	1
1165	Slovakia	WWTP Divín	2FBB_R	1
1121-1123	Saudi Arabia	WWTP Epc Royal	6FBB	3
TOTAL				**53**

ALL FOR WATER	IN-EKO	YEAR 2014		
No.	**COUNTRY**	**PLACE OF INSTALLATION**	**TYPE**	**Pc.**
1180	Czech Republic	WWTP Horní Adršpach	1FBO	1
1174	Portugal	WWTP Cinfães	3FBO	1
1173	Czech Republic	WWTP Městec Králové	3FBB	1
1170	Czech Republic	WWTP Ivanovice na Hané	3FBB	1

3/12/18

1169	Czech Republic	WWTP Dolní Adršpach	1FBO	1
1166	Czech Republic	WWTP Vidnava	2FBB_L	1
1164	New Zealand	WWTP Pahiatua	4FBO	1
1163	New Zealand	WWTP Woodville	4FBO	1
1162	Greece	Rodopoli of Serres	10_BMF_20_O	1
1161	Czech Republic	WWTP Tršice	1FBO_L	1
1158-1160	Kazachstan	WWTP Pavlodar	6FBB	3
1155-1157	Kazachstan	WWTP Pavlodar	6FBB	3
1154	Great Britain	WWTP UK	3FBO	1
1153	Hungary	WWTP Ságvár	3FBO	1
1152	Hungary	WWTP Nagybajom	2FBO	1
1150-1151	Slovakia	WWTP Trenčianska Teplá	6FBB	2
1149	Slovakia	ÚV Hriňová	2FBB	1
1148	Czech Republic	WWTP Klíčany	2FBB	1
1146-1147	Lithuania	WWTP Noriunai and Subacius	2FBB	2
1145	Latvia	WWTP Riga	10_BMF_10_BK2	1
1144	Poland	Synthos Dwory	4FBO_R	1
1143	Poland	Synthos Dwory	4FBO	1
1142	Greece	WWTP Gortina Messara - Crete	5_BMF_10_O	1
1141	Czech Republic	WWTP Benátecká Vrutice	5FBO_R	1
1140	Lithuania	WWTP Kalvaria	4FBO_R	1
1138-1139	Slovakia	WWTP Trebišov	4FBB_L/R	2
1136-1137	Cyprus	WWTP Astromeritis	2FBB	2
1135	Great Britain	WWTP UK	2FBO_L	1
1134	Czech Republic	WWTP Velké Losiny	3FBB	1
1132-1133	Slovakia	WWTP Dubnica nad Vahom	6FBB_R/L_Z	2
1131	Czech Republic	WWTP Horní Němčí	1FBB	1
1130	Czech Republic	WWTP Velký Týnec	3FBB	1
1129	Czech Republic	WWTP Týniště nad Orlicí	6FBB	1
1128	Czech Republic	fish farm Ústí nad Labem	2FBO_L	1
1127	Czech Republic	DAP mine Nástup Tušimice	3FBO_R	1
1126	Great Britain	WWTP Goonhavern	3FBO	1
1125	Greece	WWTP Heraklion, Kréta	5_BMF_10_O	1
1124	Hungary	WWTP Tiszaalpár	2FBB_L	1
1119-1120	Norway	cruise ship	2FBO_atyp	2
1118	Portugal	WWTP Neiva	2FBO_R	1
1117	Portugal	WWTP Vila Mea	4FBO_L	1
1116	Portugal	WWTP Ovelha	4FBO_R	1
1115	Korea	WWTP Korea	1FBB_L	1
1114	Czech Republic	test unit	3FBO	1
1113	Czech Republic	WWTP Brodek u Prostějova	2FBO	1
1112	Russia	WWTP Arktik	1FBB_atyp	1
1110-1111	Czech Republic	WWTP Pec pod Sněžkou	3FBB_L/R	2
1109	Argentina	Capitan Bermudes	5FBO	1
1107-1108	Hungary	WWTP Mélykut	4FBB_L/R	2
1106	Czech Republic	Beskyd Cerekev	1FBB_L	1
1105	Russia	WWTP Machňová	2FBB	1
1104	Bangladesh	Paper mill	6FBO	1
1102-1103	Hungary	WWTP Bácsalmás	3FBB_L/R	2
1101	Great Britain	WWTP UK	3FBO	1
1100	Czech Republic	WWTP Náklo	1FBB	1
1099	Czech Republic	WWTP Křelov	1FBO_R	1
1098	Czech Republic	WWTP Prášily	5_BMF_5_B2	1
1097	Slovakia	WWTP Sládkovičovo	3FBB_R	1
1094	Czech Republic	WWTP CTP Bor u Tachova	5_BMF_10_B2	1
1093	Czech Republic	KOI ponds	2FBO_R	1

3|12|18

1078	Poland	WWTP Tczów	3FBO	1
1074	Slovakia	Devínská Nová Ves	6FBB_L	1
TOTAL				69

ALL FOR WATER IN-EKO

YEAR 2013

No.	COUNTRY	PLACE OF INSTALLATION	TYPE	Pc.
1096	Czech Republic	ČS Thermal Pasohlávky	4FBO_R	1
1095	Germany	paper mill Metsa Tissue Düren	5FBO	1
1092	Portugal	WWTP Tondela	2FBO_L	1
1091	Great Britain	WWTP	4FBO	1
1090	Hungary	Iregszemcse	2FBO	1
1089	Bulgaria	WWTP	4FBB_R	1
1088	Great Britain	WWTP	2FBO_R	1
1087	Great Britain	WWTP	2FBO_R	1
1086	Hungary	WWTP Sandorfalva	5FBB_R	1
1085	Belarus	WWTP	5_BMF_5_B2	1
1083-1084	Norway	ship	3FBO_atyp	2
1082	Slovakia	WWTP Gbely	3FBB_R	1
1081	Czech Republic	WWTP Aero Vodochody	2FBB	1
1080	Slovakia	WWTP Zámutov	2FBO	1
1079	Czech Republic	WWTP Horní Vltavice	5_BMF_10_B2	1
1077	Czech Republic	Paper mill Aloisov	10_BMF_10_BK2	1
1076	Great Britain	WWTP	4FBO	1
1075	Slovakia	WWTP Volkswagen	4FBB_R	1
1073	Russia	WWTP	2FBB	1
1072	Slovakia	WWTP Čaklov	5_BMF_13_B2	1
1071	Czech Republic	SVK Buchlovice	2FBO	1
1070	Hungary	WWTP Fenekpustza	5_BMF_5_B2	1
1069	Great Britain	WWTP	6FBO	1
1067-1068	Great Britain	WWTP	4FBO	2
1066	Great Britain	WWTP	3FBO	1
1065	Estonia	WWTP	5_BMF_5_O	1
1064	Czech Republic	WWTP Panholec	1FBB_R	1
1062-1063	Russia	WWTP	5_BMF_5_B2	2
1061	Czech Republic	WWTP Žleby	1FBO_R	1
1060	Portugal	WWTP	4FBB_R	1
1059	Hungary	WWTP Cece	2FBO_R	1
1058	Great Britain	WWTP	4FBO	1
1057	Great Britain	WWTP	4FBO	1
1055-1056	India	Crown City	2FBO	2
1054	Czech Republic	WWTP Vítkovice	2FBO_R	1
1053	Slovakia	Žilina	2FBO_L	1
1052	Lithuania	WWTP Juseviciai	1FBO_L	1
1051	Portugal	WWTP	2FBO_R	1
1050	Greece	WWTP	4FBB_L	1
1049	Ireland	Errigal Seafood Donegal	3FBB	1
1048	USA	WWTP	5_BMF_5_O	1
1047	Czech Republic	WWTP Horní Jiřetín	5_BMF_10_B2	1
1046	Lithuania	WWTP Aleksandrija	5_BMF_10_B2	1
1045	Lithuania	WWTP Siluva	5_BMF_10_B2	1
1044	Lithuania	WWTP Lenkimai	5_BMF_10_B2	1
1042 - 1043	USA	WWTP	5_BMF_5_O	2
1041	Czech Republic	WWTP Kopidlno	5_BMF_10_B2	1

3/12/18

1039 - 1040	Czech Republic	Fish ponds	2FBO	2
1037 - 1038	Sweden	WWTP Spillepeng	4FBO	2
1036	Czech Republic	Plzen - Power plant	10_BMF_10_BK2	1
1035	Poland	Papermill Krapkowice	5FBO	1
1034	Great Britain	WWTP Carrowdore	4FBO_R	1
1033	Russia	WWTP Gornouralsk	3FBB	1
1032	Great Britain	WWTP	3FBO_R	1
1031	Austria	Fish Hatchery	4FBOR	1
1030	Great Britain	WWTP	3FBO_R	1
1029	Great Britain	WWTP	3FBO_R	1
1028	Liuthania	WWTP	5_BMF_5_B2	1
1027	Russia	WWTP	1FBB	1
1026	Slovakia	WWTP Sečovce	4FBB	1
1025	Turkey	Cloth factory Oztek	6FBB_L	1
1024	Niger	WWTP Ogba	6FBO	1
1023	USA	WWTP	5_BMF_5_O	1
1022	Italy	WWTP	3FBO_R	1
1021	Liuthania	WWTP	2FBB_atyp	1
1020	Czech Republic	WWTP Umyslovice	1FBB	1
1019	Italy	WWTP	5_BMF_10_BK2	1
1018	Izrael	Paper mill	4FBO	1
1017	Ukraine	WWTP	1FBO	1
1016	Czech Republic	WWTP Bánov	2FBB	1
1015	Great Britain	WWTP	2FBO_L	1
TOTAL				79

ALL FOR WATER IN-EKO

YEAR 2012

No.	COUNTRY	PLACE OF INSTALLATION	TYPE	Pc.
1012 - 1014	Czech Republic	University of South Bohemia, faculty of fisheries and protection of waters	1FBO	3
1011	Czech Republic	WWTP Brodek u Přerova	5_BMF_13_B2	1
1010	Lithuania	WWTP Šilgaliai	5_BMF_10_B2	1
1009	Lithuania	WWTP Vikiškiai	5_BMF_10_B2	1
1008	Great Britain	Union Papertech	6FBO	1
1007	Great Britain	WWTP	6FBO	1
1006	Turkey	Oztek - Turkey	6FBB	1
1005	Lithuania	WWTP Betygalos	5_BMF_5_B2	1
1004	Lithuania	WWTP Girkalnis	5_BMF_10_B2	1
1003	Czech Republic	Strážnické chips	1FBO	1
1002	Czech Republic	WWTP Dolní Němčí	3FBB_L	1
1000 -1001	Slovakia	Recycentrum Snina	1FBO_L/R	2
999	Slovakia	WWTP Sirk	1FBB_L	1
998	Czech Republic	WWTP Nový Malín	5_BMF_13_B2	1
997	Czech Republic	WWTP Chromeč	2FBO	1
995-996	Russia	WWTP Jugorsk	5FBB	2
994	Great Britain	WWTP	5FBO	1
990-993	Hungary	WWTP Bekecsaba	6FBB	4
989	Czech Republic	WWTP Slapy	2FBO	1
988	Czech Republic	Car park Prague - Bohdalec	1FBO	1
987	Czech Republic	WWTP Bohdanec	1FBO	1
986	Belarus	WWTP	10_BMF_10_BK2	1

3/12/18

2

985	Czech Republic	WWTP Nové Zámky	2FBO_R	1
983-984	Czech Republic	WWTP Nová Paka	4FBB	2
982	Great Britain	WWTP	5FBO	1
980-981	Germany	paper mill Mets Tissue Düren	4FBO	2
978-979	Great Britain	WWTP	5FBO	1
977	Lithuania	WWTP	2FBB	1
976	Czech Republic	WWTP Moravany	10_BMF_20_BK2	1
975	Slovakia	WWTP Revúca	6FBB_R	1
974	Lithuania	WWTP	5FBO_R	1
973	Italy	WWTP	4FBB	1
972	New Zeland	WWTP Tokoroa	6FBO	1
971	Russia	WWTP	3FBO	1
970	Lithuania	WWTP Sateikiai	5_BMF_10_B2	1
969	Lithuania	WWTP Alsedžiai	5_BMF_10_B2	1
968	South Korea	WWTP	4FBO	1
966-967	Czech Republic	WWTP Holíč	10_BMF_10_BK2	2
965	Lithuania	WWTP Kuliai	5_BMF_10_B2	1
964	Czech Republic	WWTP Halenkovice	2FBB	1
962-963	Czech Republic	WWTP Ivančice	5FBB	2
961	Lithuania	WWTP	5_BMF_5_O	1
960	Czech Republic	WWTP Stankovany	5_BMF_13_B2	1
959	Czech Republic	WWTP Tehov	5_BMF_5_O	1
958	Czech Republic	WWTP Hať	2FBB_R	1
957	Great Britain	WWTP	6_FBO	1
956	Russia	WWTP	5_BMF_5_B2	1
955	Portugal	WWTP	2FBO_L	1
954	Portugal	WWTP Yoca	4FBO_R	1
953	Portugal	WWTP Castelo Branco	3FBO_R	1
952	Czech Republic	testing IN-EKO	1FBO	1
951	Great Britain	WWTP	3FBO	1
950	Czech Republic	fish farm Vračovice	5_BMF_10_O	1
948-949	Russia	WWTP	2FBB_BK2	2
947	Slovakia	WWTP Malý Kamenec	1FBB_R	1
946	Slovakia	WWTP Cabaj – Čápor	5_BMF_10_B2	1
945	Czech Republic	fish farm Litomyšl	5_BMF5_B2	1
944	Great Britain	WWTP	3FBO	1
943	USA	WWTP	5_BMF_5_O	1
942	Czech Republic	WWTP Choustník	10_BMF_20_B2	2
941	Great Britain	WWTP	4FBO	1
937-940	Italy	WWTP Esia (Brescia)	6FBB	3
934-936	Italy	WWTP Fara Sabina (Rieti)	6FBB	3
933	Czech Republic	WWTP Kořenov	5_BMF_13_B2	1
930-932	Czech Republic	Synthos Kralupy	4FBO	3
928-929	Hungary	WWTP	10_BMF_10_B2	2
927	Slovakia	WWTP Východná	5_BMF_10_B2	1
926	Slovakia	WWTP Važec	5_BMF_10_B2	1
TOTAL				88

ALL FOR WATER IN-EKO

YEAR 2011

No.	COUNTRY	PLACE OF INSTALLATION	TYPE	Pc.
923-925	Russia	WWTP	5FBO	3
922	Greece	WWTP	5_BMF_10_B2	1
921	USA	WWTP	5_BMF_10_O	1
920	Lithuania	WWTP Išorai	5_BMF_5_B2	1

3/12/18

919	Greece	WWTP	5_BMF_10_O	1
918	Czech Republic	WWTP Česká Třebová	6FBB	1
915-917	Russia	WWTP	5FBO	3
914	Germany	WWTP	4FBO	1
913	Germany	WWTP	5FBO	1
910-912	Germany	WWTP	5FBO	3
909	Russia	WWTP	5_BMF_5_B2	1
908	Great Britain	WWTP	3FBO	1
907	Czech Republic	WWTP Deštné v Orlických Horách	5_BMF_13_B2	1
906	USA	WWTP	5_BMF_5_O	1
905	Ireland	WWTP	1FBO	1
904	USA	WWTP	5_BMF_10_O	1
903	Czech Republic	WWTP Hoštky	5_BMF_5_B2	1
902	Lithuania	WWTP Linkuva	5_BMF_10_B2	1
901	Belarus	WWTP	5_BMF_5_B2	1
899-900	Poland	Krapkowice Paper mill	10_BMF_20_O	2
898	Czech Republic	WWTP Hrádkov	10_BMF_10_B2	1
896-897	Slovakia	WWTP Fiľakovo	10_BMF_10_B2	2
895	Poland	Fabryka Wagónow Gniewczyn	5_BMF_13_O	1
894	USA	WWTP	5_BMF_5_O	1
893	China	Hailar	5FBB	1
892	Italy	WWTP	4FBO	1
891	Czech Republic	WWTP Šanov	5_BMF_5_B2	1
887-890	Germany	industrial zone Riaydh	6FBB	4
886	Czech Republic	WWTP Dechtice	3FBO	1
885	Korea	WWTP	4FBO	1
884	Great Britain	WWTP	3FBO	1
883	Great Britain	WWTP	3FBO	1
882	Czech Republic	WWTP Škrdlovice	5_BMF_5_B2	1
881	Czech Republic	WWTP Chropyně	5_BMF_13_O	1
880	Poland	WWTP Rudiskas	3FBO	2
879	Poland	WWTP Niedzwiada	3FBO	1
878	Poland	WWTP Wohyn	3FBO	1
877	Czech Republic	WWTP Dolní Morava	5_BMF_5_B2	1
875-876	Greece	WWTP Thessaloniki	10_BMF_20_BK2	2
871-874	Czech Republic	WWTP Cheb	6FBB	4
870	Czech Republic	WWTP Oldřišov	1FBB	1
869	Slovakia	WWTP Východná	5_BMF_13_B2	1
868	Slovakia	WWTP Važec	5_BMF_13_B2	1
867	Czech Republic	WWTP Křenice	5_BMF_5_B2	1
866	Czech Republic	WWTP Slavonice	10_BMF_10_B2	1
864-865	Czech Republic	WWTP Velké Meziříčí	5FBB	2
863	Lithuania	WWTP	5_BMF_10_B2	1
862	Slovakia	WWTP Dúbrava	5_BMF_5_B2	1
861	Greece	WWTP	5_BMF_5_B2	1
859-860	Czech Republic	WWTP Moravská Třebová	4FBB	2
858	Slovakia	ČOV Sokolany	5_BMF_5_B2	1
857	Czech Republic	ČOV Zlatá Koruna	5_BMF_5_B2	1
856	Czech Republic	WWTP Korytná	5_BMF_13_O	1
855	Hungary	Dunastyr - Danube rafinery	2FBO	1
854	Great Britain	WWTP	2FBO	1
850-853	Russia	WWTP Nižnyj Tagil	5FBB	4
849	Lithuania	WWTP Akmene	5FBB	1
848	Czech Republic	WWTP Ejpovice	5_BMF_5_B2	1
847	South Korea	WWTP	2FBO	1
846	Slovakia	WWTP Tisovec	5_BMF_13_B2	1

3/12/19

844-845	Slovakia	WWTP Senica	6FBB	2
842-843	China	WWTP Chahaer	5FBB	2
841	Czech Republic	WWTP Deštná	10_BMF_10_B2	1
839-840	Italy	WWTP Melfi	10_BMF_20_O	2
837-838	Mexico	WWTP Polchuk	1FBO	2
835-836	Portugal	WWTP	10_BMF_25_BK2	2
833-834	Portugal	WWTP Pinhal Novo	10_BMF_25_O	2
832	Portugal	WWTP Montado	10_BMF_10_O	1
830-831	Belarus	WWTP	5_BMF_5_B2	2
829	Jordan	WWTP	5FBO	1
828	Jordan	WWTP	4FBO	1
826-827	Czech Republic	WWTP Broumov	6FBB	2
825	Poland	WWTP Paradysz	2FBO	1
824	Slovakia	WWTP Lubenik	5_BMF_10_B2	1
823	Great Britain	WWTP	2FBO	1
821-822	Mexico	WWTP Zacatepec	4FBO	2
TOTAL				106

ALL FOR WATER IN-EKO TEAM

YEAR 2010

No.	COUNTRY	PLACE OF INSTALLATION	TYPE	Pc.
820	Great Britain	WWTP	3FBO	1
819	Czech Republic	WWTP Patok	5_BMF_10_O	1
818	Great Britain	WWTP	3FBO	1
817	Russia	WWTP	5_BMF_5_B2	1
816	Czech Republic	WWTP Holešov	10_BMF_20_BK2	1
815	Portugal	WWTP	5_BMF_10_O	1
814	Lithuania	WWTP	10_BMF_10_B2	1
813	Great Britain	WWTP	2FBO	1
812	Great Britain	WWTP	10_BMF_10_O	1
811	Czech Republic	WWTP Kostelec nad Labem	5_BMF_13_B2	1
810	Czech Republic	WWTP Moravičany	5_BMF_10_B2	1
809	Portugal	WWTP	5_BMF_10_O	1
808	Portugal	WWTP	5_BMF_10_O	1
807	Czech Republic	WWTP Kroměříž	5_BMF_5_O	1
806	Great Britain	WWTP	10_BMF_10_O	1
805	Slovakia	WWTP Skalica	10_BMF_25_B2	1
804	Czech Republic	WWTP Břidličná	5_BMF_13_B2	1
803	USA	WWTP	5_BMF_5_O	1
802	Czech Republic	WWTP Hrotovice	5_BMF_13_B2	1
801	Slovakia	WWTP Bratislava	4FBB	1
799-800	Czech Republic	WWTP Uherský Brod	15_BMF_30_BK3	2
798	Great Britain	WWTP	5_BMF_10_O	1
796-797	USA	WWTP	5_BMF_10_O	1
795	Great Britain	WWTP	10_BMF_20_O	1
794	Ireland	WWTP	5_BMF_5_O	1
793	Poland	WWTP Krzyskowice	4FBO	1
792	Germany	WWTP	10_BMF_10_B2	1
790-791	Czech Republic	WWTP Police	10_BMF_20_BK2	2
784-789	China	WWTP	15_BMF_30_BK3	6
783	Czech Republic	WWTP Tupadly	5_BMF_10_B2	1
782	Czech Republic	WWTP Doloplazy	5_BMF_5_B2	1
781	Great Britain	WWTP	5_BMF_10_O	1
778-780	Czech Republic	WWTP Domažlice	10_BMF_20_B2	3
777	Czech Republic	WWTP Slušovice	10_BMF_10_B2	1

3/12/18

776	Great Britain	WWTP	10_BMF_20_O	1
775	Italy	paper mill	10_BMF_20_O	1
774	USA	WWTP	5_BMF_10_O	1
773	Czech Republic	WWTP Mohelnice	10_BMF_20_BK4	1
772	Ireland	WWTP	5_BMF_10_O	1
770-771	Hungary	WWTP	15_BMF_30_BK3	2
769	Czech Republic	WWTP Vizovice	10_BMF_20_BK2	1
768	Romania	Comcech paper mill	10_BMF_20_O	1
767	Korea	WWTP	10_BMF_20_O	1
766	Czech Republic	WWTP Vlčnov	5_BMF_13_B2	1
765	Czech Republic	WWTP Nové Město nad Metují	10_BMF_25_BK2	1
764	Jordan	paper mill	10_BMF_25_B2	1
763	Czech Republic	WWTP Valašské Klobouky	10_BMF_20_B2	1
762	USA	WWTP	5_BMF_5_O	1
761		test unit	10_BMF_10_B2	1
760	Czech Republic	Fish nursery	10_BMF_10_O	1
759	Italy	WWTP	10_BMF_10_O	1
758	Czech Republic	WWTP Vilémov	5_BMF_5_O	1
757	Czech Republic	WWTP Mšené Lázně	5_BMF_13_B2	1
756	Netherlands	WWTP	5_BMF_10_O	1
755	Italy	WWTP	5_BMF_5_O	1
754	USA	WWTP	5_BMF_10_O	1
TOTAL				66

ALL FOR WATER IN-EKO

YEAR 2009

No.	COUNTRY	PLACE OF INSTALATION	TYPE	Pc.
753	Czech Republic	WWTP Linet	5_BMF_5_B2	1
752	Czech Republic	WWTP Střeň	5_BMF_5_O	1
751	Hungary	test unit	5_BMF_5_O	1
749-750	Argentina	papermill	10_BMF_20_O	2
748	Czech Republic	WWTP Třebotov	5_BMF_10_B2	1
746-747	Sweden	papermill	10_BMF_25_O	2
745	Czech Republic	WWTP Dolní Lhota	5_BMF_10_B2	1
744	Korea	WWTP	5_BMF_5_O	1
743	Czech Republic	WWTP Vilémov	5_BMF_5_O	1
742	USA	WWTP	5_BMF_10_O	1
741	Korea	WWTP	5_BMF_5_B2	1
740	Italy	WWTP	10_BMF_20_B2	1
739	Poland	WWTP Stroža	10_BMF_10_O	1
738	Poland	WWTP Wiazownica	10_BMF_20_O	1
732-737	China	WWTP Renqui	15_BMF_30_BK3	6
731	Great Britain	WWTP	10_BMF_10_O	1
728-730	China	WWTP Pingyi	15_BMF_30_BK3	3
727	Latvia	WWTP	10_BMF_10_B2	1
726	Czech Republic	WWTP Všetaty	5_BMF_5_O	1
725	USA	WWTP	10_BMF_10_O	1
724	Egypt	papermill	10_BMF_10_O	1
723	Great Britain	WWTP	10_BMF_10_O	1
722	Italy	WWTP	10_BMF_20_O	1
721	Kuwait	WWTP	10_BMF_10_B2	1
720	Netherlands	WWTP	10_BMF_25_BK2	1
719	USA	WWTP	5_BMF_5_O	1
718	Czech Republic	WWTP Huštěnovice	5_BMF_10_B2 plast	1
717	Czech Republic	WWTP Rokytnice	5_BMF_10_O	1

3/12/18

716	Czech Republic	WWTP Srní	5_BMF_10_B2	1
715	Hungary	vegetable factory	5_BMF_10_B2	1
714	Great Britain	WWTP	10_BMF_20_O	1
713	Czech Republic	WWTP Leopoldov	5_BMF_10_O	1
712	Czech Republic	WWTP Březolupy	5_BMF_10_B2	1
710-711	USA	WWTP	5_BMF_10_O	2
709	Portugal	WWTP	10_BMF_10_O	1
708	Portugal	WWTP	5_BMF_5_O	1
702-707	Iran	WWTP	15_BMF_30_B3	6
701	Czech Republic	WWTP Kvilda	5_BMF_5_B2	1
700	Czech Republic	WWTP Újezd u Val. Klobouk	5_BMF_5_B2	1
699	Italy	WWTP	5_BMF_10_O	1
698	Great Britain	WWTP	5_BMF_10_B2	1
697	Great Britain	WWTP	10_BMF_10_O	1
696	USA	WWTP	5_BMF_10_B2	1
695	USA	WWTP	5_BMF_5_O	1
693-694	USA	WWTP	5_BMF_5_O	2
692	Great Britain	WWTP	5_BMF_10_O	1
691	Czech Republic	Saint Gobain Vertex Litomyšl	10_BMF_10_O	1
690	Czech Republic	WWTP Ptice	5_BMF_5_B2	1
688-689	Great Britain	WWTP	10_BMF_20_O	2
686-687	Great Britain	WWTP	10_BMF_10_O	2
685	Czech Republic	WWTP Javorná	5_BMF_5_B2	1
684	Great Britain	WWTP	10_BMF_10_O	1
683	Czech Republic	WWTP Slavičín Hrádek	10_BMF_20_BK2	1
682	Great Britain	WWTP	10_BMF_10_O	1
681	USA	WWTP	10_BMF_20_O	1
680	Czech Republic	Agrimex P. Březany	5_BMF_10_B2	1
679	Great Britain	WWTP	10_BMF_10_O	1
TOTAL				75

ALL FOR WATER IN-EKO

YEAR 2008

No.	COUNTRY	PLACE OF INSTALATION	TYPE	Pc.
678	Slovakia	MVE Velké Kozmálovce	10_BMF_20_O	1
677	USA	WWTP	5_BMF_5_O	1
676	Czech Republic	WWTP Velehrad	5_BMF10_B2	1
672-675	China	WWTP Faku	15_BMF_30_BK3	4
671	Great Britain	WWTP	5_BMF_10_O	1
670	USA	WWTP	5_BMF_10_O	1
679	Great Britain	WWTP	5_BMF_10_B2	1
667-668	Greece	WWTP	5_BMF_5_B2	2
666	Great Britain	WWTP	10_BMF_10_O	1
665		exhibition	5_BMF_5_O	1
664	Greece	WWTP	10_BMF_20_B2	1
663	Czech Republic	WWTP Mikulov	10_BMF_25_O	1
662	Czech Republic	Power plant Komořany	5_BMF_5_O	1
661	Russia	WWTP	5_BMF_5_B2	1
660	Italy	WWTP	5_BMF_5_B2	1
659	Great Britain	WWTP	5_BMF_5_B	1
657-658	Great Britain	WWTP	10_BMF_20_O	2
656	Slovakia	WWTP Koktebeť	10_BMF_20_BK2	1
646-655	Italy	Trucazzano	15_BMF_30_BK3	10
645	Italy	Cappo Verde	5_BMF_5_O	1
644	Great Britain	WWTP	5_BMF_5_O	1

3/12/18

643	Czech Republic	WWTP Březno	5_BMF_10_B2	1
641-642	Portugal	WWTP	10_BMF_10_B2	2
640	Czech Republic	Saint Gobain Vertex Litomyšl	10_BMF_10_O	1
638-639	Belarus	WWTP	10_BMF_10_B2	2
637	Greece	WWTP	5_BMF_10_O	1
636	Slovakia	SHP Slavošovce	5_BMF_15_B2	1
635	Great Britain	WWTP	10_BMF_10_O	1
634	Netherland	WWTP	5_BMF_10_O	1
632-633	Greece	WWTP	15_BMF_30_BK3	2
631	Poland	WWTP Lusina	10_BMF_10_O	1
630	Great Britain	WWTP	10_BMF_20_O	1
629	Great Britain	WWTP	5_BMF_10_O	1
624-626	Ireland	WWTP	5_BMF_5_O	3
623	Poland	WWTP Slomniki	10_BMF_20_O	1
622	Czech Republic	WWTP Zbytiny	5_BMF_5_B2	1
619	Italy	WWTP	5_BMF_10_O	1
618	Italy	WWTP	10_BMF_25_O	1
617	Czech Republic	WWTP Dubenec	5_BMF_10_B2	1
616	Great Britain	WWTP	10_BMF_20_O	1
615	Korea	WWTP	5_MF_10_O	1
614	Great Britain	WWTP	10_BMF_20_O	1
612	Great Britain	WWTP	10_BMF_10_O	1
611	Serbia	WWTP Jánošík	5_BMF_5_B2	1
610	Slovakia	WWTP Bučina	5_BMF_5_B2	1
608-609	Great Britain	WWTP	10_BMF_10_O	2
606-607	Portugal	WWTP	10_BMF_20_O	2
604-605	Great Britain	WWTP	10_BMF_20_O	2
602-603	Great Britain	WWTP	10_BMF_10_O	2
601	Italy	WWTP Osnago	15_BMF_30_BK3	1
600	Czech Republic	WWTP Lukavice	10_BMF_20_B2	1
598-599	Czech Republic	WWTP Námestovo	15_BMF_30_BK3	2
597	Russia	WWTP	5_BMF_5_B2	1
596	Czech Republic	WWTP Písečná	5_BMF_5_O	1
595	Czech Republic	Krkonošské papírny	5_BMF_10_O	1
594	Tanzánie	WWTP	5_BMF_15_B2	1
593	USA	WWTP	10_BMF_20_B2	1
591-592	USA	WWTP	5_BMF_10_O	2
590	Czech Republic	WWTP Rousínov	10_BMF_10_B2	1
589	Czech Republic	WWTP Slavkov	10_BMF_25_BK2	1
TOTAL				**85**

ALL FOR WATER IN-EKO

YEAR 2007

No.	COUNTRY	PLACE OF INSTALATION	TYPE	Pc.
588	Ireland	WWTP	5_BMF_10_B2	1
587	Belarus	WWTP Belarus	5_BMF_5_B2	1
586	Czech Republic	WWTP Rápotice	5_BMF_5_B2	1
585	Great Britain	WWTP	10_BMF_20_O	1
584	Great Britain	WWTP	10_BMF_10_O	1
583	Poland	WWTP Wlosan	10_BMF_10_O	1
582	Greece	WWTP	5_BMF_10_O	1
580-581	Greece	WWTP	10_BMF_20_B2	2
579	Great Britain	WWTP	10_BMF_20_O	1
578	USA	WWTP	10_BMF_20_O	1
577	Russia	WWTP Pustoška	5_BMF_5_B2	1

3/12/18

576	Czech Republic	papermill Předklášteří	10_BMF_25_O	1
575	Belarus	WWTP	10_BMF_10_B2	1
574	Slovakia	WWTP Tek. Lužany	5_BMF_5_B2	1
573	Ireland	WWTP Stradone	5_BMF_5_O	1
571-572	Slovakia	papermill Harmanec	10_BMF_25_O	2
569-570	Greece	WWTP	10_BMF_10_B2	2
567-568	Slovakia	WWTP Vranov a. Topľou	10_BMF_20_BK2	2
565-566	Belarus	WWTP	10_BMF_10_B2	2
564	Great Britain	WWTP	10_BMF_10_O	1
563	Slovakia	WWTP Ličartovce	5_BMF_5_B2	1
562	Slovakia	WWTP Slavkov	5_BMF_5_O	1
561	Ibiza	WWTP	5_BMF_5_O	1
560	Greece	WWTP	10_BMF_10_B2	1
559	Chile	WWTP	10_BMF_20_BK2	1
558	Czech Republic	Hotel Klínovec	5_BMF_5_O	1
557	Belarus	Vitebsk	5_BMF_5_B2	1
556	Slovakia	Hermanec	10_BMF_10_O	1
555	Czech Republic	WWTP Libavá	5_BMF_5_O	1
554	Slovakia	WWTP Čačov	5_BMF_5_B2	1
553	Russia	WWTP Moskva	5_BMF_5_B2	1
552	Czech Republic	WWTP Pavlov	5_BMF_10_O	1
550-551	Italy	WWTP	15_BMF_30_BK3	2
549	Czech Republic	backery Hering	5_BMF_5_O	1
548	Czech Republic	Mine Tušimice	5_BMF_5_B2	1
547	Czech Republic	WWTP Jaroměř	15_BMF_30_BK3	1
545-546	Italy	WWTP	10_BMF_20_BK2	2
543-544	Ukrajina	WWTP	15_BMF_30_BK3	2
542	New Zeland	WWTP	10_BMF_20_O	1
541	Slovakia	WWTP Brezová	5_BMF_5_B2	1
540	Netherland	papermill	10_BMF_20_O	1
538-539	Slovakia	WWTP Tento	10_BMF_20_O	2
537	Czech Republic	WWTP Uherce	5_BMF_5_B2	1
535-536	Great Britain	WWTP	10_BMF_10_O	2
533-534	Great Britain	WWTP	5_BMF_10_O	2
532	USA	WWTP	10_BMF_10_O	1
531	Russia	WWTP Jekatěrinburg	5_BMF_5_B2	1
530	Slovakia	WWTP Kavečany	5_BMF_5_B2	1
528-529	Czech Republic	WWTP Rakovník	10_BMF_20_B2	2
527	Italy	WWTP	5_BMF_10_O	1
526	Czech Republic	WWTP Tehovec	5_BMF_5_B2	1
525	Czech Republic	WWTP Logistic Stříbro	5_BMF_5_B2	1
524	Czech Republic	WWTP Károv	5_BMF_5_B2	1
523	Great Britain	WWTP	5_BMF_10_O	1
522	Czech Republic	WWTP Moravský Krumlov	10_BMF_20_O	1
521	Great Britain	WWTP	10_BMF_10_O	1
520	Great Britain	WWTP	5_BMF_5_O	1
519-518	USA	WWTP	5_BMF_10_O	2
517-516	Slovakia	WWTP Piešťany	15_BMF_30_BK3	2
515	Great Britain	WWTP	5_BMF_10_O	1
514	Great Britain	WWTP	5_BMF_10_O	1
513	Great Britain	WWTP	5_BMF_10_O	1
512	Great Britain	WWTP	10_BMF_10_O	1
511	Great Britain	WWTP	10_BMF_10_O	1
510	Great Britain	WWTP	15_BMF_30_BK3	1
509	Italy	WWTP	5_BMF_10_O	1
508-506	Italy	WWTP	10_BMF_20_O	3

3/12/18
2

505	Italy	WWTP	5_BMF_5_O	1
504	Ireland	WWTP	5_BMF_10_O	1
TOTAL				85

ALL FOR WATER IN-EKO

YEAR 2008

No.	COUNTRY	PLACE OF INSTALATION	TYPE	Pc.
503	Italy	paper mill	10_BMF_25_O	1
501-502	Great Britain	WWTP	10_BMF_10_O	2
498-500	Great Britain	WWTP	5_BMF_10_O	3
497	Great Britain	WWTP	5_BMF_10_O	1
493-496	USA	WWTP	5_BMF_5_O	4
492	Great Britain	WWTP	10_BMF_10_O	1
491	Great Britain	WWTP	5_BMF_10_O	1
490	Great Britain	WWTP	10_BMF_10_O	1
488-489	Great Britain	WWTP	10_BMF_10_O	2
486-487	Czech Republic	WWTP Mojmírovce	10_BMF_10_B2	2
478-485	Italy	WWTP	15_BMF_30_BK3	8
477	Ireland	WWTP	5_BMF_10_O	1
476	Lithuania	WWTP	10_BMF_10_O	1
475	Poland	Leczno	10_BMF_20_O	1
474	USA	WWTP	5_BMF_10_O	1
473	USA	WWTP	5_BMF_10_O	1
471-472	Italy	WWTP	10_BMF_20_BK2	2
469-470	Great Britain	WWTP	10_BMF_20_O	2
468	Czech Republic	WWTP Vodochody, Straškov	5_BMF_15_B2	1
467	Great Britain	WWTP	5_BMF_10_O	1
466	Great Britain	WWTP	5_BMF_10_O	1
465	USA	WWTP	10_BMF_23_B3	1
464	Lithuania	WWTP	10_BMF_20_B3	1
462-463	Great Britain	WWTP	5_BMF_10_O	2
460-461	Great Britain	WWTP	5_BMF_10_O	2
459	Czech Republic	WWTP Uhy	5_BMF_5_O	1
458	Czech Republic	WWTP Předboj	5_BMF_5_B2	1
457	Great Britain	WWTP	5_BMF_5_O	1
456	Great Britain	WWTP	5_BMF_10_O	1
455	Czech Republic	WWTP Renštejn	5_BMF_5_O	1
454	Italy	WWTP	10_BMF_20_BK2	1
453	USA	WWTP	5_BMF_10_O	1
451-452	Greece	WWTP	5_BMF_5_O	2
450	Italy	WWTP	15_BMF_30_BK3	1
449	Great Britain	WWTP	5_BMF_10_O	1
448	Poland	WWTP Debno	10_BMF_25_BK2	1
447	Lithuania	Fish farm	10_BMF_20_B3	1
446	Czech Republic	WWTP Albeř,centre UK	5_BMF_5_O	1
445	Belarus	WWTP	5_BMF_5_O	1
444	Great Britain	WWTP	10_BMF_20_O	1
442-443	USA	WWTP	5_BMF_10_O	2
436-441	Italy	Colongo Al Serio Bregamo	15_BMF_30_BK3	6
433-435	Czech Republic	WWTP Příbram	10_BMF_20_B2	3
432	Great Britain	WWTP	10_BMF_10_O	1
431	Great Britain	WWTP	10_BMF_10_B2	1
430	USA	WWTP	5_BMF_5_O	1
429	Czech Republic	veneer mill	5_BMF_10_OA	1
428	Germany	Omega papier Wernshause	5_BMF_10_O	1

3/12/18

426-427	Great Britain	WWTP	5_BMF_10_O	1
422-425	USA	WWTP	5_BMF_5_O	4
421	Italy	WWTP	5_BMF_10_B2	1
420	Portugal	WWTP	10_BMF_20_O	1
419	Great Britain	WWTP	5_BMF_10_O	1
418	Belarus	WWTP	10_BMF_10_BK2	1
416-417	Italy	WWTP	10_BMF_20_BK2	2
415	Czech Republic	Třebestovice	5_BMF_5_O	1
414	Czech Republic	WWTP	5_BMF_10_B2	1
TOTAL				**89**

ALL FOR WATER IN-EKO TEAM

YEAR 2005

No.	COUNTRY	PLACE OF INSTALATION	TYPE	Pc.
411-413	USA	WWTP	5_BMF_5_O	3
409-410	Great Britain	Welsh Water	10_BMF_20_O	2
408	Czech Republic	Vesuvius Ostrava	5_BMF_10_O	1
406-407	Belarus	WWTP	10_BMF_10_BK2	2
403-405	Czech Republic	WWTP Mariánské Lázně	10_BMF_20_B2	3
402	Ireland	WWTP	5_BMF_5_B2	1
401	Belarus	WWTP	10_BMF_10_BK2	1
400	Hungary	Cemical industries Borsodchem	10_BMF_20_B2	1
399	Greece	WWTP	5_BMF_10_B2	1
398	Italy	test unit	5_BMF_5_O	1
397	Hungary	WWTP	10_BMF_20_O	1
396	Great Britain	WWTP	5_BMF_10_O	1
394-395	Belarus	WWTP	5_BMF_5_B2	2
393	Great Britain	WWTP	10_BMF_20_O	1
392	Great Britain	WWTP	10_BMF_10_O	1
391	Great Britain	WWTP	10_BMF_10_O	1
390	Great Britain	WWTP	5_BMF_10_O	1
389	Belarus	WWTP	10_BMF_10_BK2	1
388	USA	WWTP	10_BMF_10_O	1
387	Czech Republic	Test unit	5_BMF_5_B2	1
386	Slovakia	WWTP Horné trhovište	5_BMF_10_B2	1
384-385	Czech Republic	WWTP Kadaň	10_BMF_20_BK2	2
383	Ireland	WWTP	5_BMF_5_O	1
382	Great Britain	Test unit	5_BMF_5_O	1
381	Czech Republic	WWTP Benátky n. Jizerou	10_BMF_20_B2	1
380	Slovakia	TENTO a.s. Žilina	10_BMF_25_O	1
379	Slovakia	TENTO a.s. Žilina	10_BMF_10_O	1
378	Slovakia	WWTP Hella-Rakoľuby	5_BMF_10_B2	1
377	Poland	WWTP Kačinskij	5_BMF_10_O	1
376	Russia	WWTP	5_BMF_5_O	1
374-375	Czech Republic	WWTP Jirkov	10_BMF_25_BK2	2
372-373	USA	WWTP	5_BMF_10_O	2
368-371	USA	WWTP	5_BMF_5_O	4
367	Greece	WWTP	5_BMF_5_B2	1
366	Czech Republic	WWTP Jindřichov	10_BMF_20_B2	1
365	Brasil	WWTP	5_BMF_10_O	1
364	Ireland	WWTP	5_BMF_5_O	1
363	Italy	Cassano D´Adda	15_BMF_30_BK3	1
362	Slovakia	WWTP Oazis	5_BMF_5_B2	1
361	Germany	WWTP	5_BMF_10_O	1
360	Czech Republic	WWTP Sedlec	5_BMF_5_B3	1

3/12/18

359	USA	WWTP	10_BMF_10_O	1
357-358	Slovakia	WWTP Zvolen	15_BMF_30_BK3	2
356	Slovakia	Levice	5_BMF_10_O	1
355	Czech Republic	WWTP Trellleborg	5_BMF_10 –O	1
354	Czech Republic	Papermill Bělá a.s.	10_BMF_20_O	1
353	USA	Cortland farms	5_BMF_5_O	1
TOTAL				**61**

ALL FOR WATER IN-EKO

YEAR 2004

No.	COUNTRY	PLACE OF INSTALATION	TYPE	Pc.
351-352	Czech Republic	Tisová u Sokolova	10_BMF_10_O	2
348-350	Czech Republic	Duropack, Bupak pap.	10_BMF_20_OA	3
346-347	Algeria	Amguid, Teguentour	5_BMF_10_O	2
345	Czech Republic	Studenice u Vyškova	5_BMF_5_B2	1
344	Ireland	WWTP	5_BMF_5_O	1
343	Czech Republic	WWTP Ležáky	5_BMF_5_B2	1
335-342	Italy	WWTP	15_BMF_30_BK3	8
334	Slovakia	WWTP Mochovce	5_BMF_10_B2	1
332-333	USA	WWTP	5_BMF_10_O	2
331	Czech Republic	WWTP Škvorec	5_BMF_5_B2	1
323-330	Italy	Cassano D´Adda	15_BMF_30_BK3	8
322	Ireland	WWTP	5_BMF_5_O	1
321	Slovakia	WWTP	5_BMF_5_B2	1
320	USA	WWTP	5_BMF_10_O	1
318-319	Czech Republic	Papermill Bělá a.s.	10_BMF_20_B2A	2
317	Czech Republic	ČSPHM Cheb	5_BMF_5_B2	1
314-316	Chile	Fish farm	15_BMF_30_BK2	3
313	Czech Republic	Bontz Velká Dobrá	5_BMF_5_B2	1
312	Ireland	WWTP	5_BMF_10_B2A	1
311	Ireland	WWTP	5_BMF_10_B2	1
310	Czech Republic	WWTP Horní Studénky	5_BMF_5_B2	1
309	USA	WWTP	5_BMF_10_O	1
308	USA	WWTP	5_BMF_5_O	1
307	USA	WWTP	5_BMF_5_O	1
306	USA	WWTP	5_BMF_5_O	1
305	USA	WWTP	5_BMF_5_O	1
304	USA	WWTP	5_BMF_5_O	1
303	USA	WWTP	5_BMF_5_O	1
302	Czech Republic	Všechromy	5_BMF_5_B2	1
301	Czech Republic	WWTP Park klub Průhonice	5_BMF_5_B2	1
300	Great Britain	WWTP	10_BMF_10_B2	1
299	Slovakia	WWTP Klasov	10_BMF_20_B2	1
298	Italy	WWTP	10_BMF_20_BK2	1
297	Italy	WWTP	10_BMF_20_BK2	1
296	Ireland	WWTP	5_BMF_5_O	1
295	Czech Republic	WWTP	5_BMF_5_B2	1
294	Czech Republic	MUBEA Žebrák u Berouna	5_BMF_5_B2	1
293	Czech Republic	WWTP	5_BMF_10_B2	1
292		Test unit	5_BMF_10_B2	1
291	Chile	WWTP	10_BMF_20_O	1
288-290	Chile	WWTP	10_BMF_20_BK2	3
287	Chile	WWTP	15_BMF_30	1
286	Great Britain	WWTP	5_BMF_10_O	1
TOTAL				**67**

3/12/18

ALL FOR WATER IN-EKO

YEAR 2003

No.	COUNTRY	PLACE OF INSTALATION	TYPE	Pc.
285	Ireland	WWTP	5_BMF_5_O	1
284	Czech Republic	WWTP Trhový Štěpánov	5_BMF_10_B2	1
282-283	Slovakia	WWTP Zywiec	15_BMF_30_BK2	2
281	Czech Republic	WWTP Pavlíkov	5_BMF_5_B2	1
280	Czech Republic	WWTP Květnice	5_BMF_10_B2	1
279	Slovakia	WWTP	5_BMF_5_O	1
278	USA	WWTP	5_BMF_10_O	1
277	USA	WWTP	10_BMF_10_O	1
276	Czech Republic	WWTP Ruzyně sever	10_BMF_10_OA	1
275	Ireland	WWTP	5_BMF_5_O	1
274	USA	WWTP	10_BMF_10_O	1
273	Belgium	WWTP	5_BMF_15_O	1
272	Czech Republic	Fish farm Petrův zdar	5_BMF_10_O	1
271	New Zeland	WWTP	5_BMF_5_O	1
270	Latvia	WWTP	5_BMF_10_B2	1
269	Czech Republic	Dřevobrus M.Mádle	10_BMF_20_O	1
268	Slovakia	WWTP Búč	5_BMF_5_B2	1
266-267	Italy	WWTP	10_BMF_20_BK2	2
265	Latvia	WWTP	5_BMF_10_O	1
264	Ireland	WWTP	5_BMF_5_O	1
260-263	USA	WWTP	5_BMF_5_O	4
259	USA	WWTP	5_BMF_10_O	1
258	Czech Republic	WWTP Blatnice	5_BMF_5_B2	1
257	Slovakia	WWTP Búč	5_BMF_5_B2	1
256	Greece	WWTP	5_BMF_10_B2	1
TOTAL				30

ALL FOR WATER IN-EKO

YEAR 2002

No.	COUNTRY	PLACE OF INSTALATION	TYPE	Pc.
255	Czech Republic	WWTP Morkovice - Slížany	5_BMF_10_O	1
254	New Zeland	WWTP	10_BMF_20_B2	1
253	Czech Republic	WWTP Lhota u D. Břežan	5_BMF_5_B2	1
251-252	Slovakia	WWTP Malacky	10_BMF_20_B2	2
250	Czech Republic	WWTP Tábor	10_BMF_20_B2	1
249	USA	WWTP	5_BMF_10_O	1
248	Kuwait	WWTP	5_BMF_5_B2 A	1
247	Czech Republic	WWTP	5_BMF_10_O	1
246	Belarus	WWTP	5_BMF_10_B2	1
245	Ireland	WWTP	5_BMF_10_O	1
244	Poland	WWTP	10_BMF_20_OA	1
243	Slovakia	WWTP Levice	5_BMF_5_B2	1
242	Belgium	Van Roosmalen	10_BMF_20_OA	1
241	Czech Republic	ČEZ Počerady	10_BMF_20_OA	1
239-240	Canada	WWTP	5_BMF_10_B2	2
237-238	Czech Republic	WWTP Uničov	10_BMF_20_BK2	2
236	Czech Republic	WWTP Vyškov	15_BMF_30_BK2	1
235	Czech Republic	WWTP	5_BMF_5_B2	1
234	Czech Republic	Kaufland Modletice	5_BMF_10_B2	1
229-233	Slovakia	WWTP Lučenec	10_BMF_20_B2	5

3/12/18

228	USA	WWTP	10_BMF_20_O	1
224-227	Czech Republic	WWTP Uherské Hradiště	10_BMF_20_BK2	4
223	Czech Republic	WWTP Řehlovice	5_BMF_5_B2	1
TOTAL				33

ALL FOR WATER IN-EKO

YEAR 2001

No.	COUNTRY	PLACE OF INSTALATION	TYPE	Pc.
221-222	Czech Republic	Papermill Bělá a.s.	10_BMF_20_O	2
219-220	USA	WWTP Florida	10_BMF_20_O	2
218	Slovakia	WWTP Kamenec	5_BMF_5_O	1
217	Chile	WWTP	10_BMF_20_BK2	1
214-216	Chile	Fish farm	15_BMF_30_B2	3
213	Slovakia	WWTP	5_BMF_10_B2	1
212	Slovakia	WWTP Bánská Bystrica	10_BMF_20_O	1
211	Belgium	WWTP	10_BMF_10_O	1
208-210	Czech Republic	WWTP Klatovy	10_BMF_20_B2	3
207	Czech Republic	WWTP Kdyně	10_BMF_10_B2	1
204-206	USA	WWTP	5_BMF_5_O	3
196-203	Chile	Fish farm	15_BMF_30_BK2	8
195	Czech Republic	Vodňany	5_BMF_10_B2	1
194	Chile	WWTP	10_BMF_20_BK2	1
193	Czech Republic	TEBO a.s. Nová Včelnice	5_BMF_10_B2	1
192	Greece	WWTP	10_BMF_20_B2	1
191	Italy	WWTP	10_BMF_20_BK2	1
190	Czech Republic	WWTP Kvasiny	10_BMF_10_O	1
189	Czech Republic	WWTP Kvasiny	5_BMF_10_O	1
184-188	Italy	WWTP	10_BMF_20_BK2	5
183	Czech Republic	Tonaso Neštěmice	5_BMF_10_O	1
179-182	Italy	WWTP Benevento	10_BMF_20_BK2	4
178	Czech Republic	WWTP	5_BMF_5_B2	1
177	Czech Republic	WWTP Lochkov	5_BMF_5_B2	1
176	Belgium	WWTP	5_BMF_10_B2	1
175	Czech Republic	Glazura s.r.o.	10_BMF_20_O	1
174	Chile	Fish farm	10_BMF_20_B2	1
172-173	Hungary	WWTP	5_BMF_5_O	2
170-171	Hungary	WWTP	10_BMF_20_BK2	2
169	Slovakia	VW Bratislava	10_BMF_20_BK2	1
168	Hungary	Fish farm	5_BMF_10_B2	1
167	USA	WWTP	10_BMF_20_O	1
166	Greece	WWTP	10_BMF_20_B2	1
165	Czech Republic	JIP CEREPA	10_BMF_20_O	1
164	Czech Republic	Test unit	5_BMF_5_B2	1
159-163	Belgium	Van Roosmalen	10_BMF_20_OA	5
TOTAL				64

ALL FOR WATER IN-EKO

YEAR 2000

No.	COUNTRY	PLACE OF INSTALATION	TYPE	Pc.
158	Chile	WWTP	10_BMF_20_O	1
156-157	Czech Republic	WWTP Hranice	10_BMF_20_BK2	2
155	Italy	WWTP	10_BMF_10_BK2	1
154	Czech Republic	Aktiva a.s.	10_BMF_20_B2	1
153	Czech Republic	Test unit	5_BMF_5_B2	1

3/12/2018

152	Slovakia	WWTP	5_BMF_5_O	1
151	Slovakia	WWTP	5_BMF_10_B2	1
150	Slovakia	WWTP, VAC Horná Streda	5_BMF_5_O	1
149	Czech Republic	Podvorov	5_BMF_5_B2	1
148	Russia	WWTP	10_BMF_20_B2	1
147	Chile	Fish farm	5_BMF_10_B2	1
146	Czech Republic	WWTP Vyšní Lhota	5_BMF_10_B2	1
145	Czech Republic	WWTP Štíty	5_BMF_5_B2	1
144	Czech Republic	DROXI Všechromy	5_BMF_5_B2	1
143	USA	WWTP	5_BMF_10_O	1
142	Slovakia	TENTO a.s.	10_BMF_20_O	1
141	Czech Republic	WWTP Losiná	10_BMF_20_O	1
140	Czech Republic	Fruta Podivín	5_BMF_10_O	1
139	Czech Republic	WWTP Salvátor	5_BMF_10_B2	1
138	Czech Republic	Sladovny Nymburk	10_BMF_10_O	1
130-137	Slovakia	Kappa Štůrovo	10_BMF_20_BK2	8
129	Italy	Montauro	10_BMF_20_BK	1
128	Slovakia	WWTP	5_BMF_5_B2	1
127	Slovakia	Matador Púchov	10_BMF_20_B2	1
126	USA	WWTP Kicking Horse	5_BMF_5_O	1
125	Czech Republic	WWTP Mikulovice	5_BMF_10_B2	1
119-124	USA	WWTP	5_BMF_5_O	6
117-118	Italy	Solver	5_BMF_10_BK2	2
116	Czech Republic	ZOO Lešná	10_BMF_20_BK2	1
115	Italy	Sardinia	10_BMF_20_BK2	1
114	Poland	Spólka	5_BMF_10_B2	1
110-113	Italy	WWTP	10_BMF_10_BK2	4
109	Italy	Rameno	5_BMF_5_O	1
107-108	USA	Kentucky	5_BMF_5_O	2
106	Czech Republic	WWTP Křimice	5_BMF_10_B2	1
TOTAL				**52**

ALL FOR WATER IN-EKO TEAM

YEAR 1999

No.	COUNTRY	PLACE OF INSTALATION	TYPE	Pc.
105	Poland	WWTP	5_BMF_10_B2	1
103-104	Slovakia	Kappa Štůrovo	10_BMF_20_BK2	2
102	Czech Republic	Master foods (MARS)	5_BMF_10_O	1
101	Czech Republic	WWTP Cítov	10_BMF_10_B2	1
100	Czech Republic	VÚRH Vodňany	5_BMF_10_O	1
99	Czech Republic	PSW Warta	10_BMF_20_B2	1
98	Czech Republic	Glawerber Kryry	5_BMF_10_O	1
97	Czech Republic	WWTP Horní Počernice	10_BMF_10_O	1
96	Czech Republic	Vertex a.s. Litomyšl	10_BMF_10_B2	1
95	Czech Republic	ONO pump station	5_BMF_5_B2	1
94	USA	Kentucky	5_BMF_5_O	1
93	Slovakia	WWTP	5_BMF_5_B2	1
92	Greece	WWTP	5_BMF_5_B2	1
91	Slovakia	Košická Nová Ves	5_BMF_5_B	1
89	Czech Republic	Klínovec, hotel Nástup	5_BMF_5_B2	1
88	Czech Republic	Poděbradka s.r.o.	5_BMF_10_BA	1
87	Czech Republic	WWTP Přeštice	10_BMF_20_B2	1
86	Czech Republic	Hotel Arnika	5_BMF_5_O	1
85	Czech Republic	Univ. of South Bohemia, RIFCH	5_BMF_10_B2	1
84	Czech Republic	Splintex Bílina	5_BMF_10_O	1

3/12/18

80-83	Italy	WWTP	10_BMF_20_B	4
78-79	Italy	WWTP	10_BMF_20_B	2
77	Czech Republic	Česká Kubice	5_BMF_5_O	1
76	Czech Republic	Folmava	5_BMF_5_O	1
75	Czech Republic	WWTP Milevsko	10_BMF_20_B2	1
74	Slovakia	VW ES Nitra	5_BMF_5_O	1
73	Italy	WWTP	10_BMF_20_BK2	1
71-72	Czech Republic	WWTP Klokoty, Tábor	10_BMF_20_B2	2
TOTAL				**34**

ALL FOR WATER IN-EKO

YEAR 1998

No.	COUNTRY	PLACE OF INSTALATION	TYPE	Pc.
70	Italy	WWTP	10_BMF_10_O	1
69	Slovakia	Matador Púchov	10_BMF_20_B2	1
68	Slovakia	WWTP	5_BMF_5_O	1
67	Czech Republic	HYBE, pump station	5_BMF_5_B2	1
66	Italy	WWTP	10_BMF_20_B2	1
64-65	Poland	WWTP Sziersza	10_BMF_20_B2	2
63	Poland	WWTP	5_BMF_10_O	1
62	Slovakia	WWTP	5_BMF_10_O	1
60	Czech Republic	WWTP Bohutín	5_BMF_10_B	1
59	Czech Republic	WWTP	5_BMF_5_O	1
58	Poland	EXPRIM	5_BMF_10_B	1
57	Czech Republic	Hanácké závody Brodek u Prostějova	5_BMF_5_B	1
56	Italy	ČOV Brodek u Prostějova	5_BMF_10_O	1
55	Czech Republic	ZOO Lešná	5_BMF_10_B	1
54	Czech Republic	WWTP Jedivnice	10_BMF_10_O	1
53	Slovakia	Bory	5_BMF_10_O	1
52	Italy	WWTP	5_BMF_10_O	1
51	Czech Republic	Dairy Kunín	5_BMF_5_B	1
49-50	Czech Republic	WWTP Prachatice	10_BMF_20_B	2
48	Czech Republic	OMYA	5_BMF_5_B	1
47	Russia	WWTP	5_BMF_5_B	1
41-46	Italy	Argentario	10_BMF_20_B	6
TOTAL				**29**

ALL FOR WATER IN-EKO

YEAR 1997

No.	COUNTRY	PLACE OF INSTALATION	TYPE	Pc.
46	Czech Republic	Fish farm, Pohořelice	5_BMF_10_O	1
45	Slovakia	Trenčín	5_BMF_10_O	1
44	Czech Republic	Rantep Jeseník	10_BMF_10_B	1
43	Slovakia	WWTP Žilina	5_BMF_10_O	1
42	Slovakia	Motorest Styl, Senec	5_BMF_5_B	1
41	Czech Republic	WWTP	5_BMF_10_O	1
40	Czech Republic	Bohemia a.s.	10_BMF_10_O	1
38-39	Czech Republic	mine Kateřina	10_BMF_20_O	2
36-37	Czech Republic	WWTP Citice	5_BMF_10_O	2
30-35	Italy	Campodenno	10_BMF_20_B	6
29	Czech Republic	Tlučná	10_BMF_10_B2	1
28	Slovakia	WWTP Rimavská Sobota	10_BMF_20_B	1
27	Czech Republic	WWTP Kostelec n. L.	5_BMF_10_B	1
26	Czech Republic	WWTP Třebíč	10_BMF_20_B	1

3/12/18

25	Czech Republic	WWTP Červená n. Vlatvou	5_BMF_5_B	1
24	Czech Republic	WWTP Ruzyň jih	10_BMF_10_O	1
23	Czech Republic	Univ. of South Bohemia, RIFCH	5_BMF_10_O	1
22	Czech Republic	WWTP	5_BMF_5_O	1
21	Poland	WWTP Nowa Debia	10_BMF_20_O	1
19-20	Italy	Mezzocorona	10_BMF_20_O	2
TOTAL				**28**

ALL FOR WATER IN-EKO TEAM

YEAR 1996

No.	COUNTRY	PLACE OF INSTALATION	TYPE	Pc.
17-18	Czech Republic	WWTP Třebíč	10_BMF_20_B	2
16	Czech Republic	Telč	5_BMF_5_O	1
15	Slovakia	Hotel Transpetrol Račková Dolina	5_BMF_5_O	1
14	Russia	WWTP	5_BMF_5_O	1
13	Czech Republic	WWTP Ruzyně sever	10_BMF_10_O	1
12	Slovakia	WWTP Šemša	5_BMF_10_O	1
11	Czech Republic	WWTP Dobrovice	5_BMF_10_B	1
10	Czech Republic	Fish farm Hodonín	5_BMF_10_O	1
9	Czech Republic	WWTP	5_BMF_10_O	1
TOTAL				**10**

ALL FOR WATER IN-EKO TEAM

YEAR 1995

No.	COUNTRY	PLACE OF INSTALATION	TYPE	Pc.
8	Russia	WWTP Krym	5_BMF_5_O	1
7	Italy	WWTP Follonica	5_BMF_5_O	1
6	Italy	WWTP Mezzolago	10_BMF_20_B	1
5	Czech Republic	WWTP Libušín	5_BMF_10_O	1
4	Czech Republic	WWTP Pastviny	5_BMF_5_O	1
3	Czech Republic	WWTP Kličany	5_BMF_10_O	1
2	Czech Republic	WWTP Povrly	10_BMF_20_O	1
1	Czech Republic	Fish farm Mokřiny	5_BMF_10_O	1
TOTAL				**8**

IN-EKO TEAM s.r.o.
Trnec 1734
666 03 Tišnov, Czech Republic
www.in-eko.com

ISO 9001 BUREAU VERITAS Certification

3/12/18

7. UV DISINFECTION UNIT - EFFLUENT

3/12/18

ULTRAAQUA

UV DISINFECTION SYSTEMS

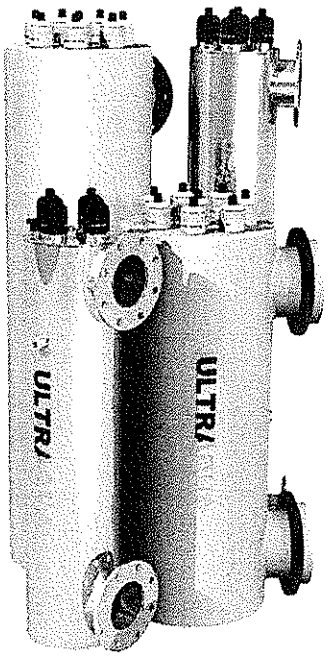

PROPOSAL FOR UV-DISINFECTION SYSTEM

UV-SYSTEM:	MonoRay 16-220 SS Channel
Company:	**KARKANIAS SA**
PROJECT:	WWTP DANILOVDRAD MONTENEGRO
APPLICATION:	Channel UV-disinfection
DATE	30-08-17

3/12/18

ULTRAAQUA COMPANY

Ultraaqua has been leading manufacturer of UV-disinfection systems for more than 25 years.
Ultraaqua's design team employs dedicated scientists and engineers with research careers of the highest academic level and many years of experience in design and operation of water treatment facilities.
The application expertise by our sales teams ensure correct model selection and sizing. Engineering and design group provide unmatched operation performance with regard to both disinfection efficency and life cycle cost.
Uncompromized product quality results in very long life time even in harsh and corrosive environments. High product quality and performance efficiency goes hand in hand with all major international standards such as CE, UL, DVGW, ÖNORM. High quality is also reflected in the fact that Ultraaqua warrant all products two years.
Ultraaqua is represented globally. UV-systems have been installed in more than 100 countries in a broad range of applications.

ULTRAAQUA MAJOR BENEFITS

Years of intensive research and and product optimization has resulted in superior market leading performance.
All UV-systems are designed, manufactured and tested in Denmark.
Most important features related to quoted UV-system:

- More than 15 years experience with open channel UV-systems
- Reactor in electro-polished AISI316L stainless steel
- ECOTEC electronic lamp driver technology
- Advanced LPHO amalgam UV-lamps
- 16000 hours lamp life time
- Full UV-Lamp and system state control
- Optional channel type UV-sensor
- Two years warranty from start up

QUOTED UV SYSTEM

Application data and calculated UV-dose from performance model simulation is seen in following table.
Please note that Ultraaqua UV-dose calculation is always done based on radiation emission data for used UV lamps.

Quoted UV system		MonoRay 16-220 SS Channel
Design flow rate	M3/h	108,0
Design UV transmittance pr 10 mm, UVT	%	70
Design UV dose, EOLL	mJ/cm2	> 85
Calculated UV dose, EOLL	mJ/cm2	86,3

3/12/18

TECH NOTES

UV-dose in mJ/cm2 can be calculated by dividing J/m2-value with 10.
UV-dose in µWs/cm2 can be calculated by multiplying J/m2-value with 100.

UV transmittance or UVT is a measurement of the amount of ultraviolet light at 254 nm that passes through a water sample compared to the amount of light that passes through a pure water sample. The measurement is expressed as a percentage, % UVT. UVT can vary over time and from site to site as it is related to the quantity of organics, colloidal solids and other material in the water which absorb the UV light as it passes through the water column. The effective UV dose is dependent primarily on the combined effects of the UV light intensity, the exposure time and the UVT. Always consult Ultraaqua specialist if in doubt about specific UVT values. Different pathogens require different amounts of UV energy to inactivate them. Therefore, for any UV system, it must be clear which pathogens are to be inactivated. The UV dose required to achieve different log removals of pathogens vary. For example to achieve 99% removal (log 2) removal of Cryptosporidium requires approx 60 J/m2. To achieve 4-log removal (99.99% removal) requires 220 J/m2 (under laboratory conditions). It is important to note that the relationship between the dose and the log removal, the so called dose response, is not linear. It takes a very much higher dose to achieve log-4 removal compared to log-2 removal. Please also note that parasites and especially virus in general require higher UV-doses compared to bacteria such as E.coli.

WARRANTY

Ultraaqua UV-systems are warranted for 2 years. The warranty covers reactors, mechanical parts and electrical components. Excludes consumable spares & labour. Warranty cover material properties, but it exclude damage as a result of corrosion. It is buyers responsibility that material component properties match operating conditions.

3/12/18

ADDITIONAL SALES TERMS

All our deliveries and services are exclusively subject to our General Terms of Delivery, which are available under http://www.ultraaqua.com/support/terms-and-conditions/ and which we will also transmit to you upon request. Any implied or statutory warranty, including the warranty of fitness for a particular purpose, is excluded to the extent permitted by applicable law. You are solely responsible to check, whether the products are suited for the intended use, in particular whether the products can be operated in your system and whether the desired results will be achieved. Ultraaqua assumes unlimited liability for claims under the Danish Product Liability Act, for claims which are based on fraudulent misrepresentation or wilful intent, and in cases where a liability of Ultraaqua cannot be excluded under mandatory law. In all other cases, the total liability of Ultraaqua for the customer's claims for damages is limited to the order value. Ultraaqua shall under no circumstances be liable for any loss of profit, any indirect, special or consequential loss or damage, costs, expenses or other claims for consequential compensation whatsoever, arising out of or in connection with this purchase order. Any implied or statutory warranty, including the warranty of fitness for a particular purpose, is excluded to the extent permitted by applicable law. You are solely responsible to check, whether the products are suited for the intended use, in particular whether the products/systems can be operated in your system and whether the desired results will be achieved.

3/12/18

ULTRAAQUA OPEN CHANNEL UV-SYSTEM SPECIFICATIONS MR16-220SS AISI316L

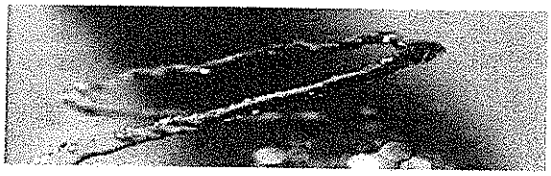

ULTRAAQUA

ULTRAAQUA A/S
Tømmervej 7
9220 Aalborg Ø, Denmark

WWW.ULTRAAQUA.COM

Design and dimensioning have been based upon numerous tests, screening of every relevant scientific publication and lots of experiences from several hundred high flow UV-systems installed worldwide.

UV-dose:
The UV system is designed to deliver effective UVC doses calculated using peak flow rates and conservative estimates for water UVT. Doses are calculated at end of lamp life time and after reductions for limited quartz sleeve fouling.
This channel UV-system is equipped with automatic quartz sleeve cleaning system and UV-intensity monitoring.
Lamp life-time is 16000H.

UV-Lamp bank/reactor:
The reactor is made of high quality stainless steel AISI316L. The reactor is designed for very low head loss. It can be installed either vertically or vertically angled to fit lower water depths. Please remember that due to the length of the UV-lamp one meter service area is needed above. The reactor is equipped with overheat protection.
Options include:

- Water level control
- Water flow guide plates
- UV-intensity sensor
- Automatic cleaning system

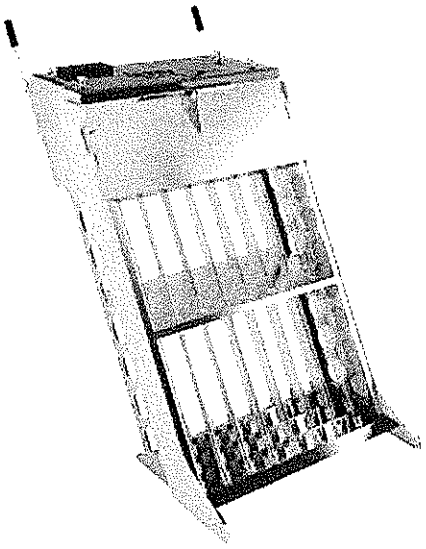

Lamp bank shown with tilted configuration

Service work incl. quartz sleeve and UV-lamp replacement is done without the need of any tools. Quartz sleeves can be cleaned in a few minutes. Quarts sleeves are typically cleaned every 6-12 months.

Control cabinet:
Cabinet is designed for installation in industrial environments. Standard enclosure material is GFRP. It has a user-friendly touch display for easy access to settings and performance data.
Control of lamp start and switch off as well as system state can be remotely controlled/monitored as standard. SCADA via MODBUS is optional.

Both reactor and control cabinet can be customized to fit almost any requirements.

Please contact ULTRAAQUA or representative for more information.

3/12/18

Specifications

Ultraaqua UV-system	MR16-220 SS Channel
Reactor units	
Reactor material	AISI316L
Minor parts materials	PTFE/PVDF/VITON/POM
Reactor configuration	1 bank with 16 lamps each vertically installed
Channel widths	604 +/-8,0mm
Water level, min / max	1120/1400 mm
Max head loss @ 1000 m3/h	35 mm
Guide plate for hydraulic control	Yes
Temperature sensor	Danfoss pT100
Dimensional drawings	Upon request
Manufactured in	Denmark
UV lamps	
Lamp type	Low pressure high output amalgam
Lamp power pr. lamp	220W
Number of UV-lamps	16
Lamp lifetime	16000H
Wire coating	PTFE
Manufactured in	Germany
Lamp drivers (ballasts)	
No of drivers pr. system	4
Product	4x220W UltraAqua 220W series
Type	Electronic HF modbus controlled
Serial communication	Modbus Daisy chain RJ45 wiring
Power Factor	> 0.98
Efficiency	95% at nominal power
Continuous monitoring	Individual electrical lamp parameters
Protection	Ground fault, temperature, input voltage
On-board diagnosis	LED indicators
Manufactured in	Holland
Control cabinet	
Material	GFRP (optional Stainless steel AISI304)
HMI	3.4" touch sensitive menu driven screen
System control	PLC
Installation	Wall mount
Cabinet dimension	700x500x300mm
Lamp cable length	5,0m (max length 30,0m)
Lamp cable type	Silicon acc. UL Style 4476 and CSA AWM II A/B
Power supply	3x400VAC+N+Pe,47-63 Hz
Power	3,9 kW @ 100% power level
Temperature	0-45 °C
Thermal control	Forced cooling
Rel. humidity	20-95% non-condensing
Enclosure type	IP54 (Optional IP55-IP68)
Approval	CE
Manufactured in	Denmark
Control features	
Lamp dimming	60-100% (UV-dose)
Lamp state indication	Individual
Accessible information	Reactor temperature
	Lamp hour
	Individual lamp state

3/12/18

	Individual lamp driver state
	Individual lamp electrical data
	Individual lamp driver temperature
	Individual lamp driver power input
	Remote control state
	Wiper system state (opt)
	Cleaning cycles (opt)
	UV-intensity (opt)
Alarms	Reactor temp. pre- and main
	Cabinet temperature
	Lamp state pre- and main
	Lamp driver state pre- and main
	UV-intensity pre- and main (opt)
	Wiper system (opt)
Digital inputs	Remote ON/OFF
Digital outputs	Main alarm
	Lamps ON signal
Analog output (4-20 mA)	UV-intensity (opt)
Optional intensity sensor	
No of sensors	1
Type	Digital silicium carbide vertically mounted
Manufactured in	Germany
Optional fully automatic quartz sleeve wiping system	
Wiper rings	Long life PTFE
Motor type	Integrated servo
Service feature	Full access to UV-lamps and quartz sleeves without dismantling wiper system
Optional water level control	
Type	Level switch
Material	AISI316L

Manufacturer:
All Ultraaqua UV-systems are manufactured by ULTRAAQUA A/S in Denmark using the stringiest quality measures.

Warranty:
2 years from date of invoice.

(SPECIFICATIONS ARE SUBJECT TO CHANGE)

3/12/18

Έργο: Ημερ/νία: 2017-09-06
Αριθμός Έργου: Συντάκτης:

wilo

Τεχνικά στοιχεία

Υποβρύχια αντλία λυμάτων Rexa PRO V05 DA-222 / EAD1X2-T0025-540-O

Αντλία							
Τύπος αντλίας		PROV05 D A - 222		Είδος εγκατάστασης		Suspension device DN50	
Πτερωτή (διάμ.)	Μέγ. Δυνατή	110	mm			DN50/2RK	
	Τυπικό (βασικό)	110	mm	Ελεύθερο πέρασμα		50	mm
	Σχεδιασμ.	110	mm	Στόμιο αναρ.	Βαθμ. PN	PN10	
	Ελάχ. Δυνατή	110	mm		Ονομ. διάμ.	DN50	
Ονομαστ. αριθμός στροφών		2900	1/min		Πρότυπο	WILO-S	
Συχνότητα		50	Hz	Στόμιο κατάθλ.	Βαθμ. PN	PN10	
Τύπος πτερωτής		Πτερωτή Vortex			Ονομ. διάμ.	DN50, Size 2, Rp2	
Κατασκευή πτερωτής		Ανοικτό			Πρότυπο	WILO-D	

Βάρη				
Βάρος υδραυλ. τμήματος αντλίας	Μέγ. 13,8	kg	Βάρος συγκροτήματος	Μέγ. 47,8 kg
Βάρος κινητήρα	34	kg		

Υλικά κατασκευής			
Κέλυφος αντλίας	EN-GJL-250		
Πτερωτή	EN-GJL-250		
Κέλυφος κινητήρα	EN-GJL-250		

Κινητήρας					
Ονομασία κινητήρα	P 13.1-10/EAD1X2-T-L01		Αριθμός πόλων	2	
Ονομ. ισχύς	2,5	kW	Ονομαστ. ταχύτ. Περιστροφής	2848	rpm
Απορρόφηση ισχύος σε Ονομ. ισχύ				3,2	kW
Ονομ. τάση				400 ~3	V
Απορρόφ. ρεύματος στην ονομ. ισχύ				5,5	A
Βαθμός απόδ. στην ονομ. ισχύ				78,6	%
συνφ στην Ονομ. ισχύ	0,84		Ονομ. συχνότητα	50	Hz
συνφ εκκίνησης	0,5		Είδος λειτουργίας: υγρή	S1	
Ρεύμα εκκίνησης DOL	31	A	Είδος λειτουργίας: ξηρή	S2 30, S3 25%	
Ρεύμα εκκίνησης Y/Δ	10,5	A	Μέγ. θερμοκρασία ρευστού	40	°C
Ροπή στρέψης εκκίνησης	21	Nm	Μέγ. αριθμ. ωριαίων εκκιν.	50	
Ροπή αδράνειας μάζας	0,0017	kg m²	Βαθμός προστασίας	IP 68	
Επιλεγμ. αντιεκρ. Προστασία	ATEX		Αριθμός Ex	BVS 11 ATEX E 119 X	
Σήμανση Ex	II 2G Ex db IIB T4 Gb				
Καλώδιο σύνδεσης κινητήρα			7G1,5 H07RN-F		

Στοιχεία σημείου λειτουργίας					
Παροχή	12,8	m³/h	Ρευστό μέσον	Νερό, καθαρό	
Μαν. ύψος	13,8	m	Τιμή NPSH της αντλίας		m
Ισχύς στον άξονα P_2	1,22	kW	Ταχύτητα περιστροφής	2915	rpm
Βαθμός απόδ. Αντλίας	39,9	%	Ολικός βαθμός απόδοσης	$= \frac{P_2 * \text{Βαθμός απόδ. Αντλίας}}{P_1}$	
Απορροφώμενη ισχύς P_1	1,6	kW			
Μέγ. παροχή	49,5 m³/h	Μαν. ύψος σε Μέγ. Παροχή	4,2 m	Μαν. ύψος σε μηδεν. παροχή	16,2 m
Σημείο βέλτ. Απόδ. Q (ΣΒΑ)	20,4	m³/h	Σημείο βέλτιστης απόδοσης H (ΣΒΑ)	11,7	m
Νο είδους	6064724				

3/12/18

Έργο:
Αριθμός Έργου:

Ημερ/νία: 2017-09-06
Συντάκτης:

wilo

Τεχνικά στοιχεία

Υποβρύχια αντλία λυμάτων — Rexa PRO V05 DA-222 / EAD1X2-T0025-540-O

Τεχνική περιγραφή
Υποβρύχια αντλία λυμάτων, ως υποβρύχιο συγκρότημα με κινητήρα, για σταθερή, κατακόρυφη τοποθέτηση, για άντληση ανεπεξέργαστων, χημικά και μηχανικά μη διαβρωτικών για την αντλία, λυμάτων. Ακτινικά διατεταγμένο στόμιο κατάθλιψης και αξονική αναρρόφηση. Το συγκρότημα είναι κατασκευασμένο με τρόπο εύκολο για τη συντήρηση. Οι παροχές πρέπει να εξασφαλίζονται κατά ISO 9906 Παρ. A.

3/12/18

Έργο:
Αριθμός Έργου:

Ημερ/νία: 2017-09-06
Συντάκτης:

wilo

Καμπύλες απόδοσης

Υποβρύχια αντλία λυμάτων

Rexa PRO V05 DA-222 / EAD1X2-T0025-540-O

Στοιχεία ισχύος σε σχέση με: Νερό, καθαρό [100%] ; 20°C; 998,19kg/m³; 0,0036014m²/h
Απόκλιση κατά ISO 9906 / Παράρτημα A.2

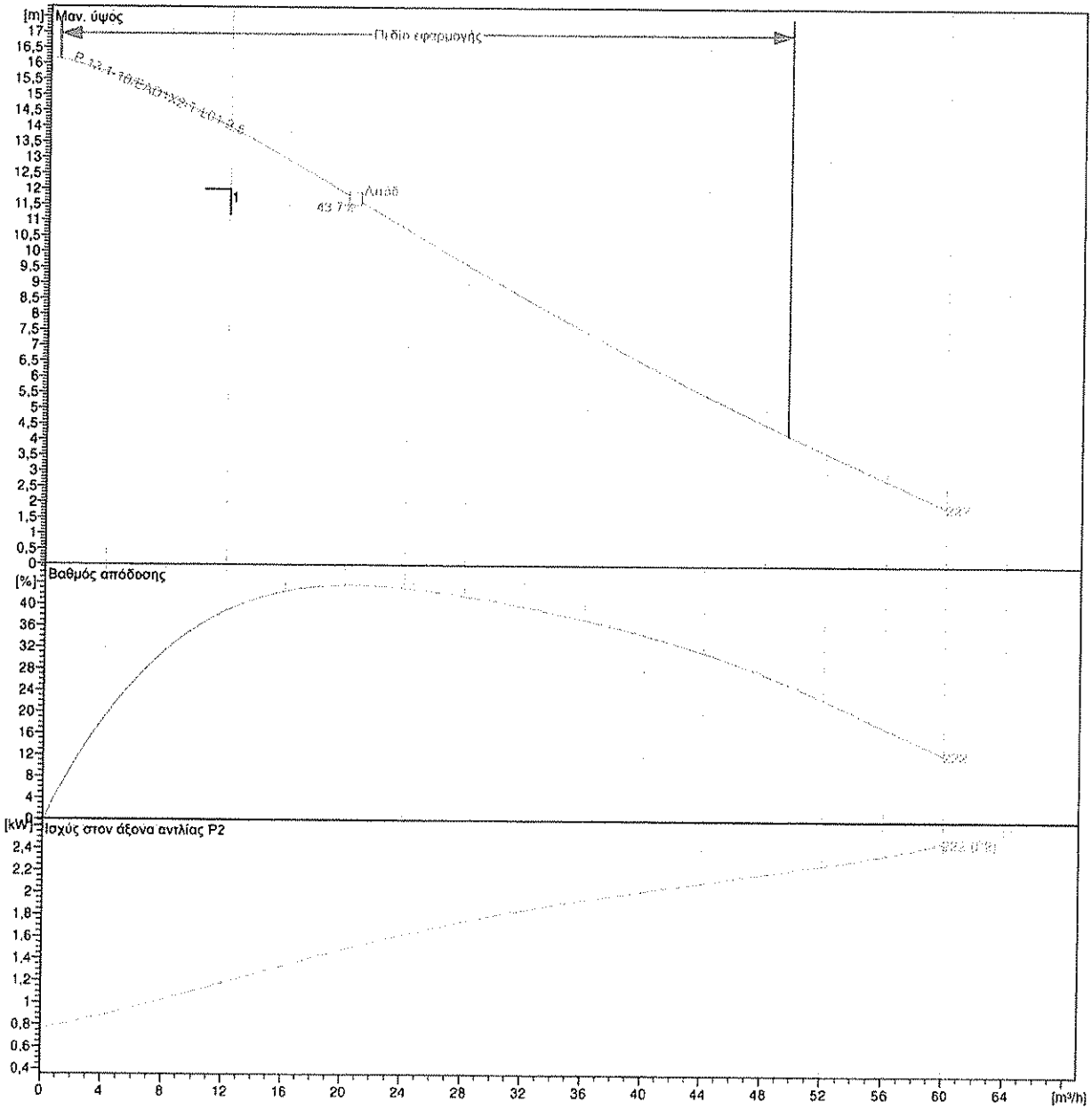

Αντλία			Στοιχεία σημείου λειτουργίας		
Πτερωτή (διάμ.) Σχεδιασμ.	110	mm	Παροχή	12,8	m³/h
Ονομαστικός αριθμός στροφών	2900	rpm	Μαν. ύψος	13,8	m
Συχνότητα	50	Hz	Ισχύς στον άξονα P_2	1,22	kW
Τύπος πτερωτής	Πτερωτή Vortex		Βαθμός απόδ. Αντλίας	39,9	%
Κινητήρας			Απορροφώμενη ισχύς P_1	1,6	kW
Ονομ. ισχύς	2,5	kW	Τιμή NPSH της αντλίας		m
Επιλεγμ. αντιεκρ. Προστασία	ATEX		Ταχύτητα περιστροφής	2915	rpm

3|12|18

Έργο:
Αριθμός Έργου:

Ημερ/νία: 2017-09-06
Συντάκτης:

wilo

Τεχνικά στοιχεία

Υποβρύχια αντλία λυμάτων

Rexa PRO V05 DA-222 / EAD1X2-T0025-540-O

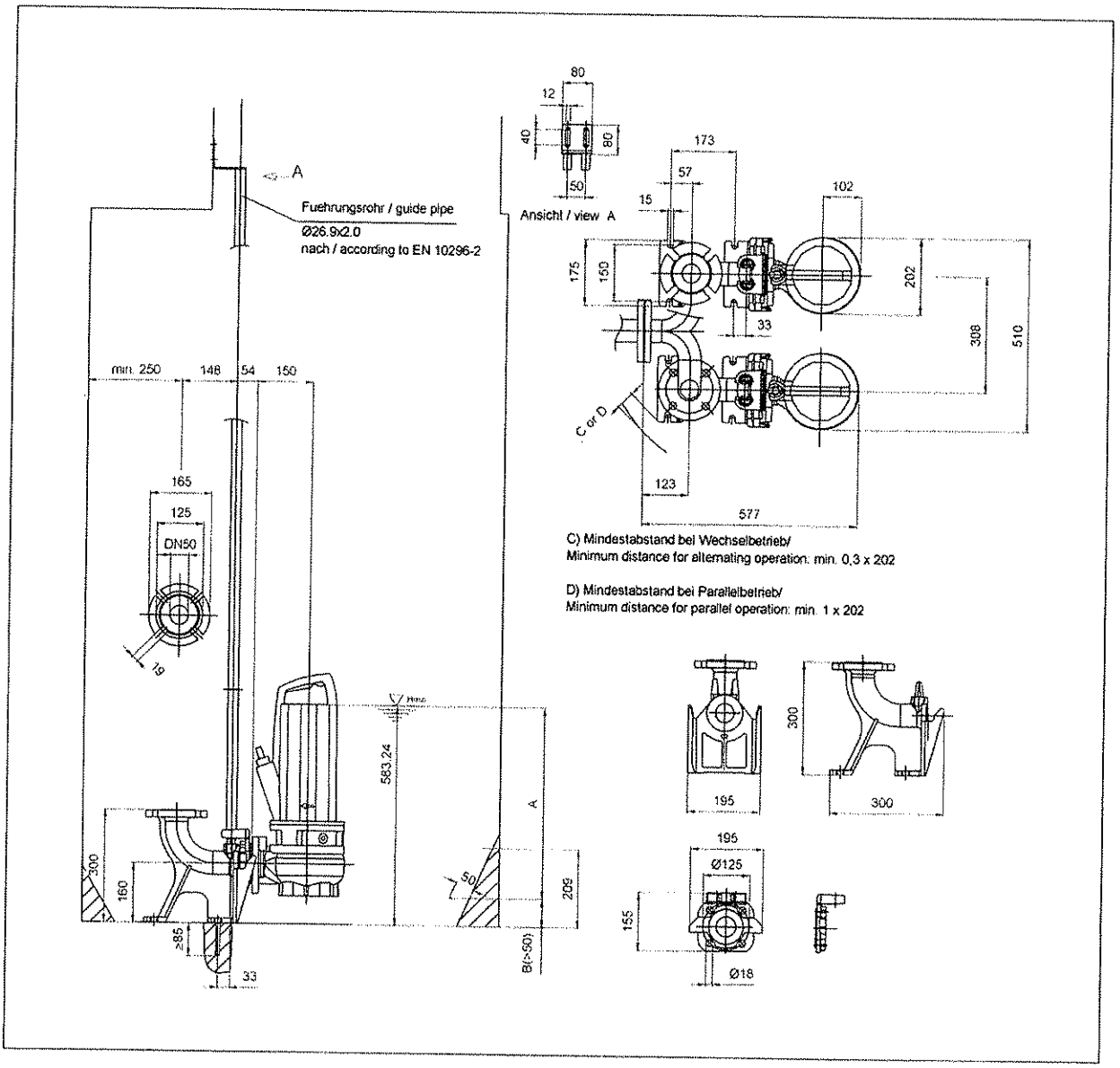

Διαστάσεις σε mm				Συνδέσεις
B	65			Στόμιο αναρ. DN50 PN10
				Στόμιο κατάθλ. DN50, Size 2, Rp2, cutoff PN10
				Suspension device DN50 DN50/2RK

3/12/18

Έργο:
Αριθμός Έργου:

Ημερ/νία: 2017-09-06
Συντάκτης:

wilo

Στοιχεία κινητήρα

P 13.1-10/EAD1X2-T-L01-2,5 2,5 kW 400 V 50Hz 3~

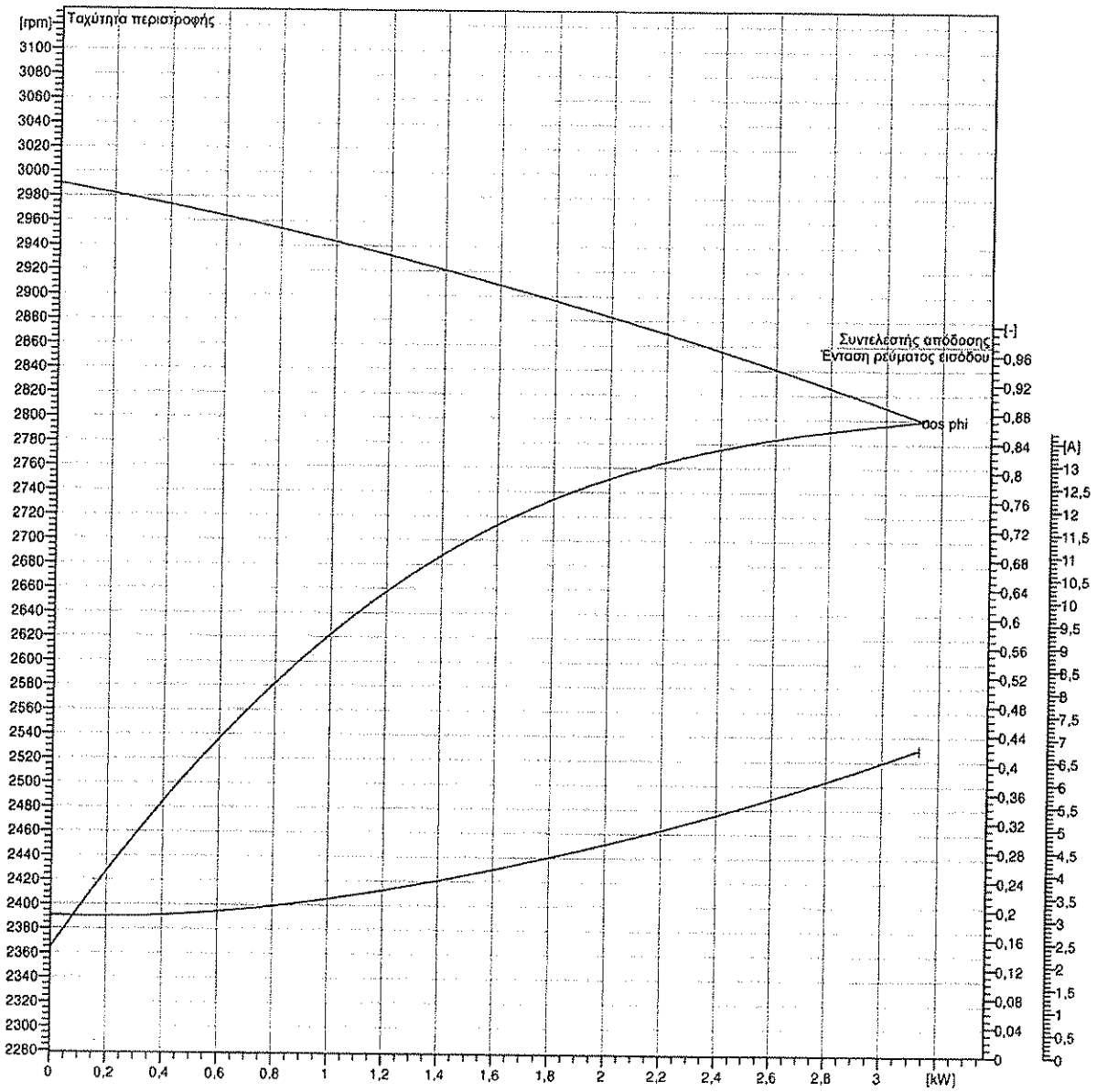

Στοιχεία εφαρμογής			Στοιχεία κινητήρα		
Είδος υποβρύχιας λειτουργίας	S1		Απορρόφηση ισχύος σε Ονομ. ισχύ	3,2	kW
Είδος λειτουργίας: ξηρή	S2 30, S3 25%		Ονομ. ισχύς	2,5	kW
Συντελεστής Service	1		Ονομαστ. ταχύτ. Περιστροφής	2848	rpm
Μέγ. θερμοκρασία ρευστού	40	°C	Απορρόφ. ρεύματος στην ονομ. ισχύ	5,5	A
Αντιεκρηκτική προστασία			Μέγ. αριθμ. ωριαίων εκκιν.	50	
Επιλεγμ. αντιεκρ. Προστασία	ATEX		Βάρος κινητήρα	34	kg
Αριθμός Ex	BVS 11 ATEX E 119 X		Βαθμός απόδ. στην ονομ. ισχύ	78,6	%
Σήμανση Ex	II 2G Ex db IIB T4 Gb		συνφ στην Ονομ. ισχύ	0,84	
Καλώδιο σύνδεσης κινητήρα			Ρεύμα εκκίνησης DOL	31	A
Καλώδιο σύνδ. κινητ.για εκκίνηση DOL	7G1,5 H07RN-F		συνφ εκκίνησης	0,5	
Καλώδιο σύνδ. κινητ. για εκκίνηση Y/Δ			Ροπή στρέψης εκκίνησης	21	Nm
Μέγ. δυνατό καλ. σύνδ. Κινητήρα	7x1,5	mm²	Ροπή αδράνειας μάζας	0,0017	kg m²

3/12/18

3/12/18

8. SLUDGE TREATMENT UNITS

3/12/18

8.1 SLUDGE AEROBIC STABILISATION AND THICKENING TANK

3/12/18

Mixer data sheet

WILO SE, Werk Hof
Heimgartenstraße 1-3
Postfach 3309 - D-95030 Hof/Saale
T: +49 9281 974-540 F: +49 9281 974-133
ctwwt@wilo.com www.wilo.com

ID	17-ORH-GR-AB-1-0001
Project country	Greece
Project name	WWTP MONDENEGRO
Position	1 Anoxic tank
Date	2017-09-01
Enquiry	

Data for selection

Mixed liquid

Kind	Activated sludge	
Density	1000	kg/m³
pH value	7	
Temperature	20	°C
Dry solids content	0,5	%
Flow behaviour	Newton flow	
Kind of thickening	None	
Additional thickener	No	

Solids

Origin	Not determined	
Kind	Not determined	
Solid size	Not determined	

Mixing task

Operating mode	Continuous	
Mixing task	Suspend	
Average calculated flow velocity[1]	0,3	m/s

Tank

Material	Concrete	
Outlet	On bottom, laterally at the tank edge	
Tank shape	Round tank	
Tank volume	353,4	m³
Vertical / inclined walls	Tank with vertical walls	
Upper diameter	10	m
Tank height	4,5	m
Maximum filling level	4,5	m
Minimum filling level	4,5	m
Relevant filling level	4,5	m

Preparation

Preparation	Screen with gap width < 10 mm, but no pre-clarification

3|12|18

WILO SE, Werk Hof
Heimgartenstraße 1-3
Postfach 3309 - D-95030 Hof/Saale
T: +49 9281 974-540 F: +49 9281 974-133
ctwwt@wilo.com www.wilo.com

ID	17-ORH-GR-AB-1-0001
Project country	Greece
Project name	WWTP MONDENEGRO
Position	1 Anoxic tank
Date	2017-09-01
Enquiry	

Aeration

Kind	Without

Tank particularities

Default

Remarks regarding the selection process

The mixing result depends on the functional quality of the plant equipment in the mechanical treatment stage (preliminary treatment). Mineral fractions (grit and sand) must be always excluded from the process and cannot be kept in suspension. It is absolutely required to check the values mentioned above with the actual values on site.

3/12/18

WILO SE, Werk Hof
Heimgartenstraße 1-3
Postfach 3309 - D-95030 Hof/Saale
T: +49 9281 974-540 F: +49 9281 974-133
ctwwt@wilo.com www.wilo.com

ID	17-ORH-GR-AB-1-0001
Project country	Greece
Project name	WWTP MONDENEGRO
Position	1 Anoxic tank
Date	2017-09-01
Enquiry	

Selection of submersible mixers

Proposal

Type	TR 36.145-4/12 S17	
Quantity	1	
Frequency	50	Hz
Rated power	4,5	kW
Propeller speed	1400	1/min
Power factor (ISO 21630)	141	N/kW
Propeller diameter	0,25	m
Maximum power input	5,8	kW
Power input in duty point	*1 4,95	kW
System-dependent power input	*2 4,46	kW
Power density	*3 14	W/m³
System-dependent power density	*4 12,6	W/m³
Distance to water surface	0,5	m

*1 Measurement at static thrust acc. to ISO 21630 (inflow velocity ~0, Open Sea conditions).
*2 The power consumption of the mixer will be reduced in proportion to the flow velocity which is generated in the tank.
*3 According to ISO 21630.
*4 According to site conditions.

Important note

Installation of the mixer(s) according to installation sketch. Before installing the mixers, the up-to-date tank plans must be submitted without previous request to WILO SE, Hof for revision.

To guarantee a continuous operation, the minimum water cover above the propeller specified by WILO must be ensured.
Please check if our basic data are identical to your application and, if necessary, inform us in writing about modifications/objections. The aforementioned mixer(s) selection data are integral part of our warranty, whereas our warranty comes only into effect, when the submersible mixers are installed according to our recommendation. Because the overall function depends considerably on the correct positioning of the submersible mixers, we will not accept any warranty claims which result from positioning which we did not approve explicitly. Also zones of weak flow due to the tank geometry are not part of our warranty. The values of maximum power input, power input in the duty point and energy density are valid for clean water. Furthermore the use of our submersible mixers in patented procedures or under trade mark rights of third parties is excluded from our liability.

[1]In case of rectangular or round tanks the average flow velocity above the tank section cannot be guaranteed.
For the selected tank shape no directed circulating flow can be generated for physical reasons. The calculated average flow velocity refers only to an undirected turbulent flow.

3|12|18

All attached notes relating to the product and the selection are part of the technical selection of WILO SE.

Installation proposal

WILO SE, Werk Hof
Heimgartenstraße 1-3
Postfach 3309 - D-95030 Hof/Saale
T: +49 9281 974-540 F: +49 9281 974-133
ctwwt@wilo.com www.wilo.com

ID	17-ORH-GR-AB-1-0001
Project country	Greece
Project name	WWTP MONDENEGRO
Position	1 Anoxic tank
Date	2017-09-01
Mixer	TR 36.145-4/12 S17
Enquiry	

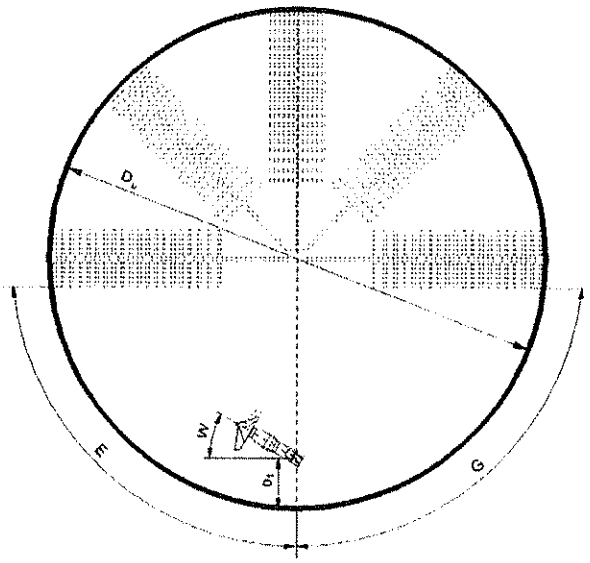

Installation recommendation regarding to miscellaneous minimum distances

n *	1			Du	10	m
W	45	°		E	1,5	m
G	1	m		D1	0,5	m
NI *	1					

* n = no. of mixer per tank, NI = no. of installation positions per tank

3/12/18

Without scale

Modification reserved

STANDARD

Installation proposal

WILO SE, Werk Hof
Heimgartenstraße 1-3
Postfach 3309 - D-95030 Hof/Saale
T: +49 9281 974-540 F: +49 9281 974-133
ctwwt@wilo.com www.wilo.com

ID	17-ORH-GR-AB-1-0001
Project country	Greece
Project name	WWTP MONDENEGRO
Position	1 Anoxic tank
Date	2017-09-01
Mixer	TR 36.145-4/12 S17
Enquiry	

Hints

The enclosed installation proposal is a schematic drawing and not according to scale. It serves as orientation guide. In case of order, the feasibility of this installation has to be matched with the tank drawing and the actual conditions. If there is an inflow and/or outflow in the immediate vicinity of the mixer, the mixer position must be checked based on updated tank plans to avoid bad influences on the mixer and short-circuit flows.

3/12/18

Abmessungen für Tauchmotorrührwerk
UNIPROP TR 36

Dimensions of Submersible mixer **UNIPROP TR 36**

Dimensions du circulateur immergé **UNIPROP TR 36**

wilo
Heimgartenstraße 1-3 D-95030 Hof/Saale
Telefon +49 9281 974-0 Fax +49 9281 96528
www.wilo.com E-Mail: info@wilo.com

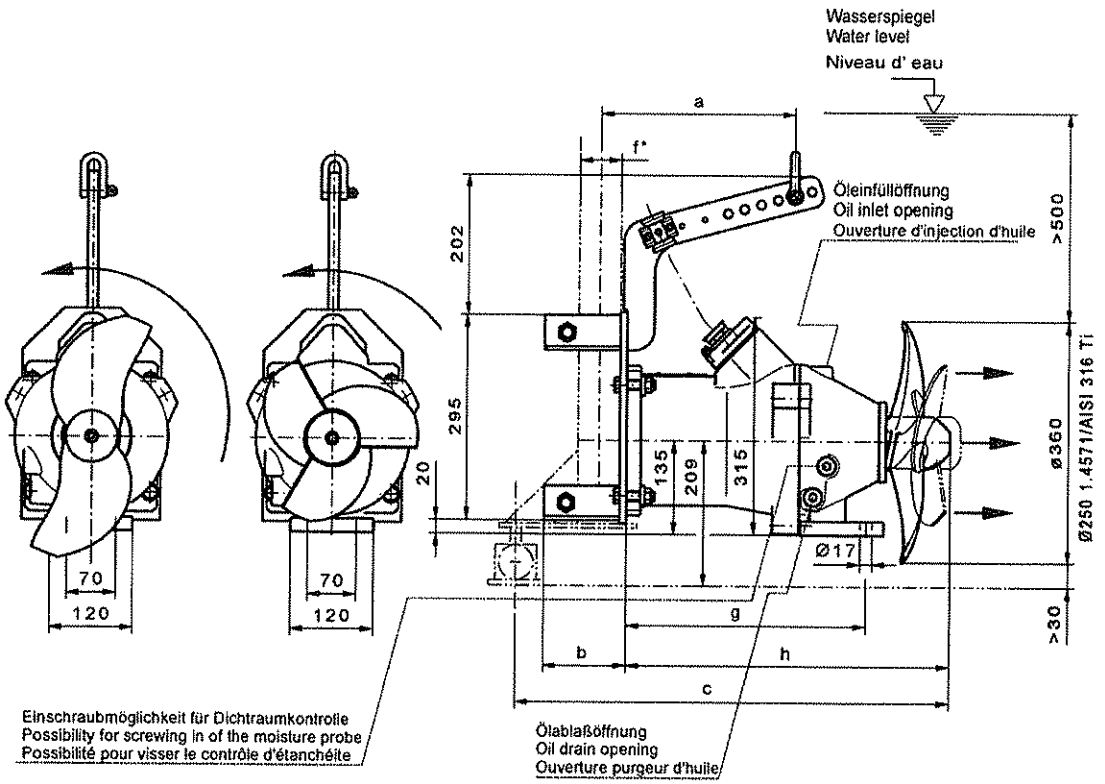

*) ab Beckentiefen > 6m ist mit dem Hersteller bezgl. der Gestängegröße Rücksprache zu halten!

From tank depths of 6m on please contact the manufacturer because of the guide pipe size!

A partir de 6m veuillez vous adresser au fabricant en ce qui concerne les dimensions des tubes de guidage!

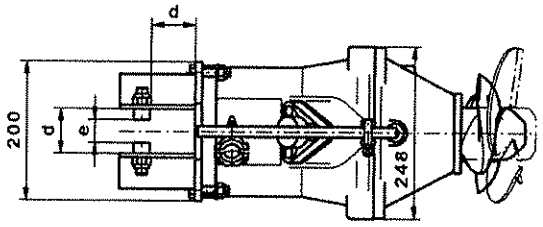

Zeichnung / Drawing / Souscription:

TR36.___-_/8
f = 60x60

¹) TR36...S..

Motor / Motor type/ Type de moteur	T17-8/8R .. -6/8R			T17-4/12R			T17-4/16R	
Gestänge-Gr./ Size of pipes / Dimension du tube	f = 50x50	f = 60x60	f = 80x80	f = 50x50	f = 60x60	f = 80x80	f = 80x80	f = 100x100
a	235	240	250	265	270	280	280	300
b	100	120	140	100	120	140	140	165
c	615/629¹	625/639¹	645/659¹	650/664¹	660/674¹	680/694¹	770/784¹	790/804¹
d	55	65	85	55	65	85	85	115
e	23	33	53	23	33	53	53	65
g	347			382			420	
h	466/480¹			501/515¹			539/553¹	
Gewicht / Weight / Poids								
PUR	max. 61 kg			max. 69 kg			max. 80 kg	
1.4571 / AISI 316 Ti	max. 65 kg			max. 73 kg			max. 84 kg	

Maßstab: 1:10 Technische Änderungen vorbehalten - Technical changes reserved - Modifications techniques réservées

Datum: 08.07.14 NP

Mb019.prt

3/12/18

Pioneering for You

Data sheet
Wilo-EMU TR 36.145-4/16 S17

Design / Direction of rotation

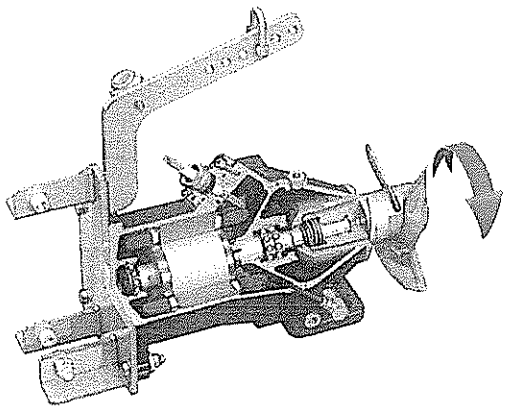

Technical data

Unit	
Power consumption $P_{1.1}$	5.1 kW
Max. thrust F	720 N
Weight of unit m	84 kg
Max. weight* m	115 kg
Protection class	IP 68
Explosion protection	ATEX, FM
Ex classification ATEX	II 2G EEx d IIB T4
Ex classification FM	CLASS I, DIV. 1, GROUPS C, D; CLASS II, DIV. 1, GROUPS E, F, G; CLASS III

* = maximum weight including accessories

Propeller	
Propeller model	3-blade propeller with self-cleaning hub; backward-curved as a result clogging- and entwining-free
Nominal propeller diameter	250 mm
Propeller speed n	1400 rpm
Transmission ratio	1
Fill quantities and types	
Filling sealing chamber	White oil
Fill level sealing chamber V	1.1 l

Motor data	
Type of motor	T 17-4/16R (Ex)
Motor type	Submersible motor according to DIN/VDE 0530 (IEC 34)
Mains connection	3~400 V, 50 Hz
Rated current I_N	13.5 A
Starting current - direct I_A	68 A
Starting current - star-delta I_A	23 A
Power consumption P_1	8.2 kW
Rated power P_2	6.5 kW
Rated speed n	1400 rpm
Motor efficiency level	-
Efficiency η_M	80.0 %
Power factor $\cos \varphi$	0.87
Fluid temperature T	+3 ... +40 °C
Max. immersion depth	20 m
Insulation class	H
Max. switching frequency t	15 /h
min. switching break t	3 min
Starting torque M	98 Nm
Moment of inertia	0.0134 kg/m²
Motor bearings	1 grooved ball bearing, 1 two-row inclined ball bearing

Materials	
Motor housing	EN-GJL-250
Motor shaft	1.4021
Static seal	FPM
Sealing on pump side	SiC/SiC
Sealing on motor side	FPM
Propeller	1.4571

3/12/18

wilo

J-OXY 250 2/15095 35(50)

Air intake rate

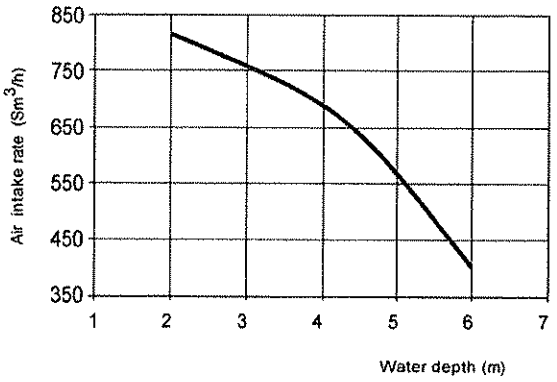

St. oxygen transfer rate SOTR *(According with ATV M 209-E)*

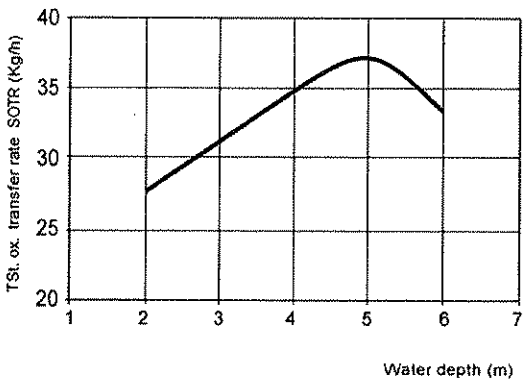

SYSTEM OXY	
Model	S-OXY 250 2/15095 35(50)
CONSTRUCTION FEATURES	
Diaphragm	95 mm
Air intake pipe	DN 200
Ejectors	2 x DN 150
MATERIALS	
Body	EN-GJL-250 (GG 25) cast iron
Diffuser cone	INOX AISI 304 stainless steel
Air intake pipe	Galvanized steel
Diaphragm	Vulkollan
Clamping nuts	INOX A2 stainless steel
Paint	Environment-friendly epoxy vinyl

DIMENSIONS (mm) e WEIGHT (Kg)			
A	690	E	1200
B	4321* (5821**)	F	3104
C	636	G	1416
D	449	Weight	774* (818**)

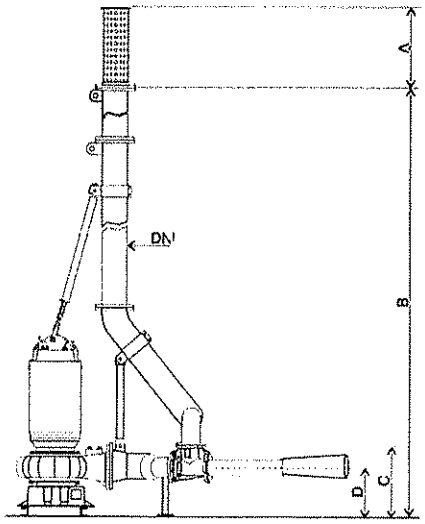

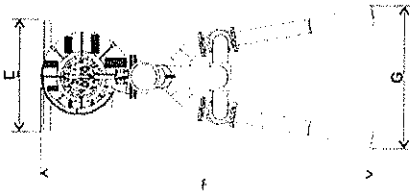

* Version L=3,5 m (max water depth installing: 3,5 m)
** Version L=5,0 m (max water depth installing: 5,0 m)

3/12/18

Project: Created on: 2017-09-01
Project number: Created by:

wilo

Technical data with motor

Submersible sewage pump FA 20.54E T 24-4/29K

Pump							
Pump type		FA 20.54E		Installation type		Suspension device	
Impeller Ø	max. possible	309	mm			DN200/2R	
	standard	277	mm	Free passage		125	mm
	designed	280	mm	Suction port	Pressure rating	PN10	
	min. possible	240	mm		Rated diameter	DN200	
Nominal speed		1450	1/min		Standard	EN1092-2-S	
Frequency		50	Hz	Discharge port	Pressure rating	PN10	
Impeller type		Single-channel			Rated diameter	DN200	
Impeller construction		Closed			Standard	EN1092-2-D	

Weights				
Weight of pump end	max. 135	kg	Weight of unit	max. 368 kg
Weight of motor	233	kg		

Materials	
Pump housing	EN-GJL-250
Stationary wear ring	1.4308
Impeller	EN-GJS-500-7
Mobile wear ring	1.4462/1.4470

Motor				
Motor name	T 24-4/29K		Number of poles	4
Rated power	25	kW	Rated speed	1450 rpm
Power input with rated power				26,5 kW
Rated voltage				400 ~3 Y/D V
Current input with rated power				49,5 A
Efficiency with rated power				88 %
cos phi with rated power	0,83		Rated frequency	50 Hz
cos phi with starting			Operation type wet	S1
Starting current, direct starting	325	A	Operation type dry	
Starting current, star-delta	106	A	Max. fluid temperature	40 °C
Starting torque	403	Nm	Starts per hour max.	15
Inertia moment	0,1153	kg m²	Degree of protection	IP 68
Sel. explosion protection	--		Ex-number	--
Ex-designation	--			
Motor connection cable			2x4x4 + 2x1,5 NSSHÖU	

Duty point data						
Volume flow		550	m³/h	Fluid	Water, pure	
Head		9,7	m	Required pump NPSH	11,4	m
Shaft power	P_2	23	kW	Speed	1460	rpm
Pump efficiency		63,9	%	Total efficiency	$= \frac{P_2 * \text{Pump efficiency}}{P_1}$	
Power input	P_1	26	kW			

Item no.

3/12/18

Project:
Project number:

Created on: 2017-09-01
Created by:

wilo

Technical data

Submersible sewage pump FA 20.54E

with motor T 24-4/29K

Tender text
Submersible Sewage Pump as submersible, single-stage block unit in stationary, vertical installation to pump untreated sewage which doesn't attack the pump neither chemically nor mechanically. Pump with radially arranged discharge piece and axial pump intake. Service-friendly design by separated motor and pump casing. Pumping values to be guaranteed as per ISO 9906 Annex A Submersible motor in pressure-resistant design, double mechanical shaft seal in EMU block design, as well as separate sealing chamber with medical white oil. Motor chamber dry. Sealing of the motor at the shaft by a double, wear-resistant mechanical shaft seal independent of the direction of rotation entirely made of silicon-carbide as closed unit, in stainless steel sealing cartridge. Both seals in the sealing cartridge are cooled and lubricated by medical white oil.Power supply cable and control cable with longitudinally tight cable trumpet, cores embedded in casting resin and soldered strands as additional protection against penetrating humidity by capillary action. Protection of the motor winding by thermistors installed. Both closed ball bearings are maintenance-free and filled with high-quality-grease. Possibility for retrofitting a moisture probe by means of a pencil electrode as protection against penetrating humidity. All casing parts are of cast iron. Shaft and connecting elements are of stainless steel.

3/12/18

Project:
Project number:

Created on: 2017-09-01
Created by:

wilo

Performance curves

with motor

Submersible sewage pump FA 20.54E T 24-4/29K

Power data referred to: Water, pure [100%] ; 20°C; 998,19kg/m³; 0,0036014m²/h
Tolerance as per ISO 9906 / Annex A.2

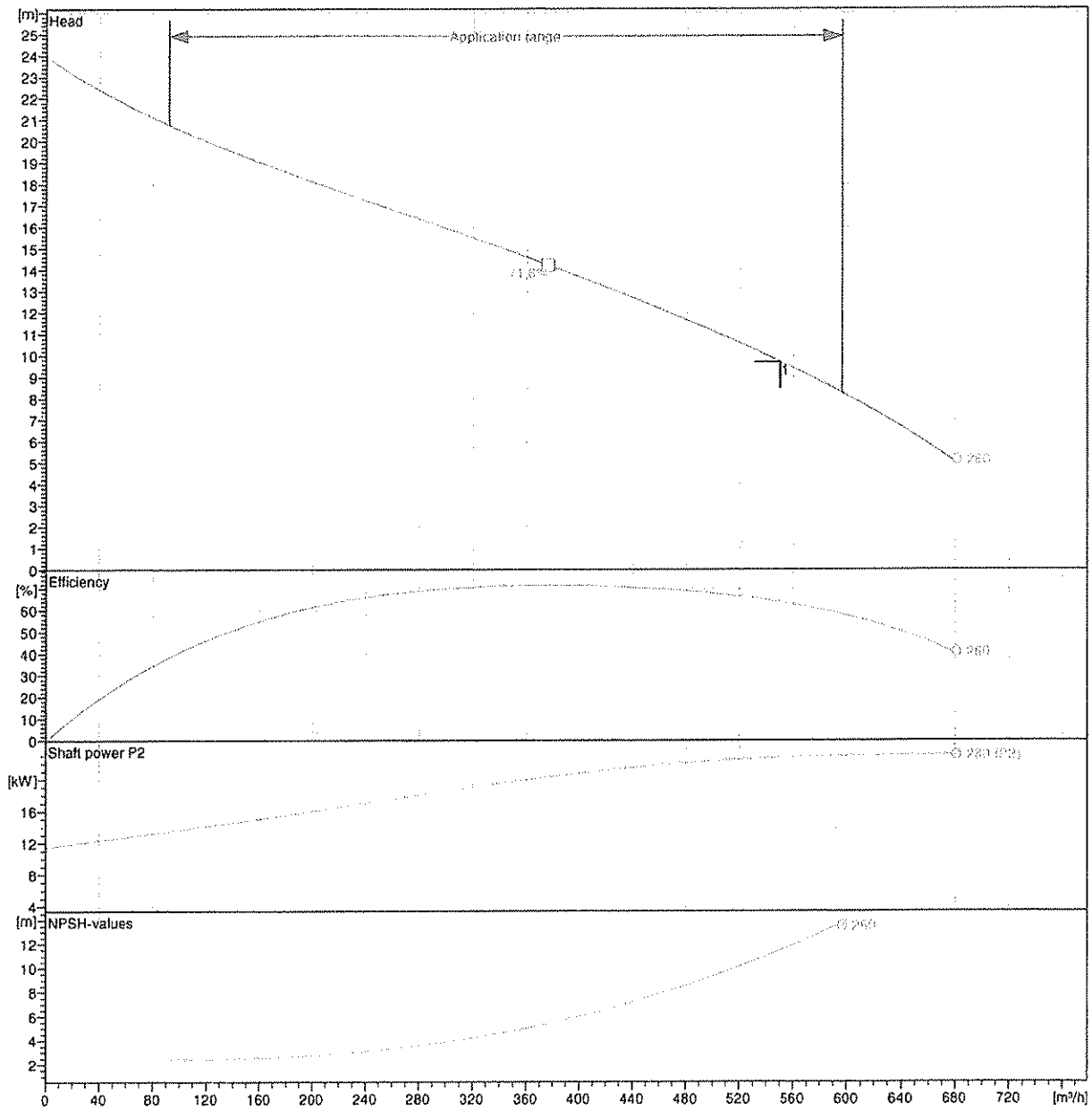

Pump				Duty point data		
Impeller Ø	designed	280	mm	Volume flow	550	m³/h
Nominal speed		1450	rpm	Head	9,7	m
Frequency		50	Hz	Shaft power P_2	23	kW
Impeller type		Single-channel		Pump efficiency	63,9	%
Motor				Power input P_1	26	kW
Rated power		25	kW	Required pump NPSH	11,4	m
Sel. explosion protection		--		Speed	1460	rpm

3/12/18

Project:
Project number:

Created on: 2017-09-01
Created by:

wilo

Technical data

Submersible sewage pump FA 20.54E

with motor T 24-4/29K

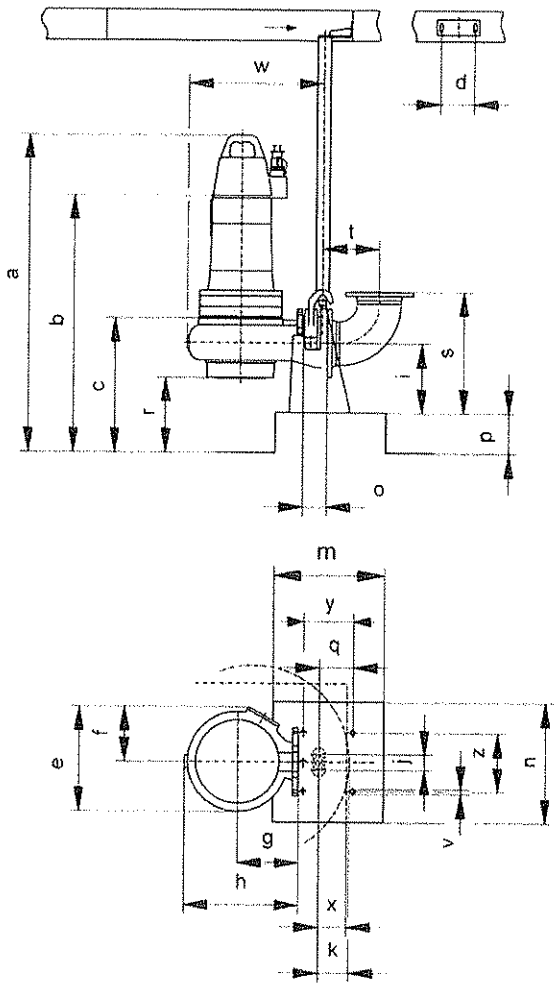

Dimensions in mm				Connections
a	1408	p	80	Suction port DN200 PN10
b	1155	q	115	
c	477	r	208	
d	270	s	560	
e	605	t	285	Discharge port DN200 PN10
f	358	v	25	
g	400	w	785	
h	693	x	105	
i	300	y	250	Suspension device DN200/2R
j	120	z	290	
m	550			
o	117			

3/12/18

Project:
Project number:

Created on: 2017-09-01
Created by:

wilo

Motor data

T 24-4/29K-25 25 kW 400 V 50Hz 3~

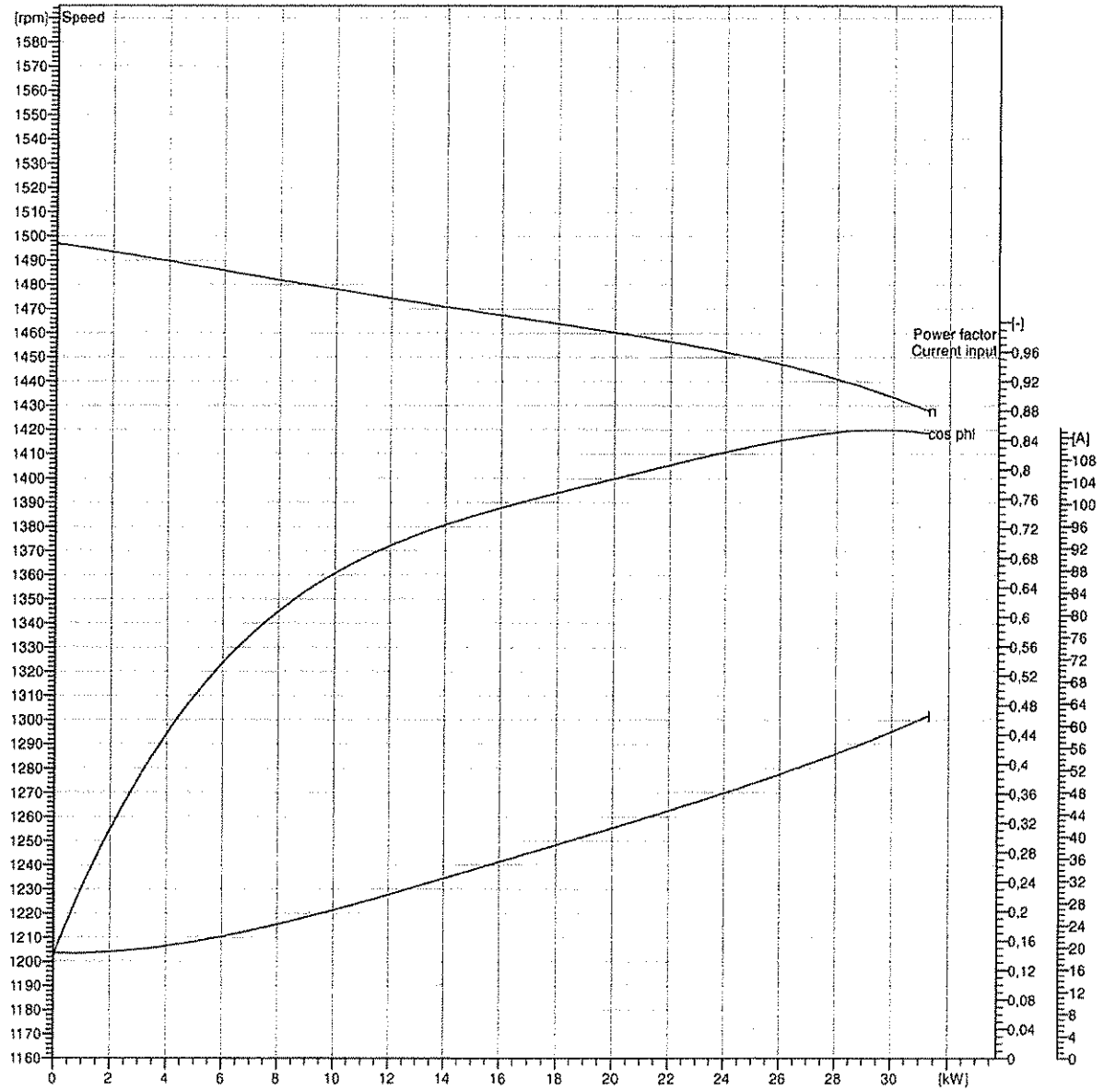

Application data			Motor data		
Operation type immersed	S1		Power input with rated power	28,5	kW
Operation type dry			Rated power	25	kW
Service factor	1		Rated speed	1450	rpm
Max. fluid temperature	40	°C	Current input with rated power	49,5	A
Explosion protection			Starts per hour max.	15	
Sel. explosion protection	--		Weight of motor	233	kg
Ex-number	--		Efficiency with rated power	88	%
Ex-designation	--		cos phi with rated power	0,83	
Motor connection cable			Starting current, direct starting	325	A
Motor connection cable for d-o-l starting	2x4x4 + 2x1,5 NSSHÖU		cos phi with starting		
Motor connection cable for star-delta starting			Starting torque	403	Nm
Max. possible motor connection cable	4x25	mm²	Inertia moment	0,1153	kg m²

3/12/18

Compact C
Range

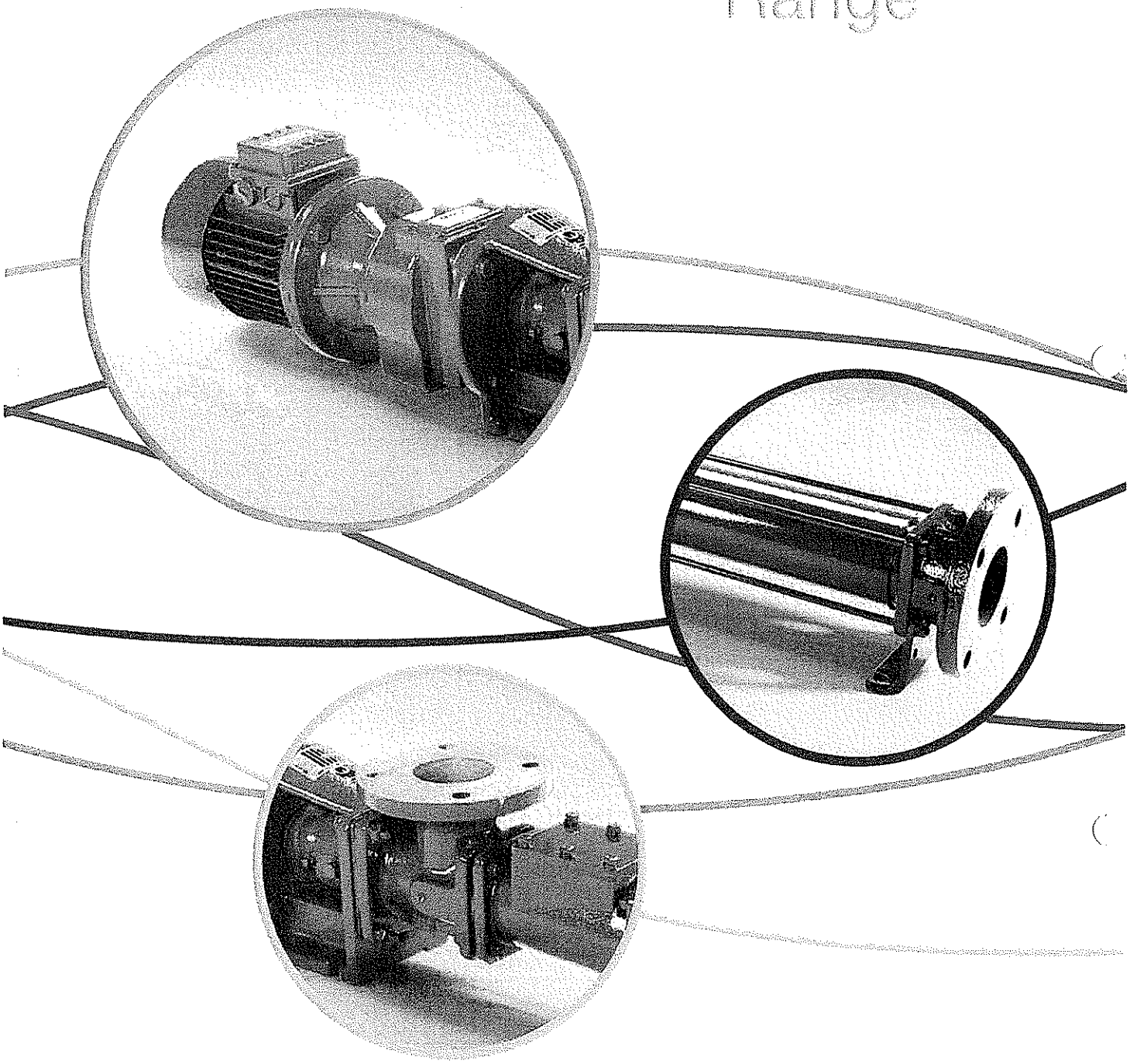

Mono®

One Company, Unlimited Solutions

3/12/18

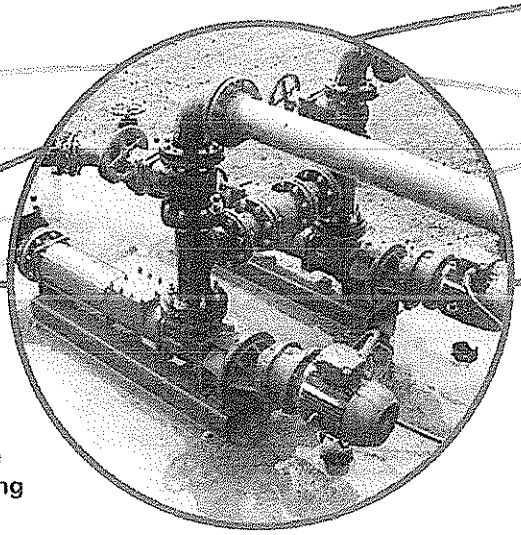

Sludge pumping

Features & Benefits

Capacity	up to 440m³/h
Pressure	up to 24 bar
Temperature	-10°C up to 100°C

Typical applications include:

- Domestic and industrial effluents
- Hydrated lime slurry
- Sludge
- Shear sensitive latex emulsion
- Milk curds, sauces, fruit juices
- Industrial chemicals and detergents
- Starch slurries
- Coating clays, gypsum and silicate
- Paper stocks
- Agricultural slurries

"A competitively priced progressing cavity pump, with a compact construction and maximum performance characteristics."

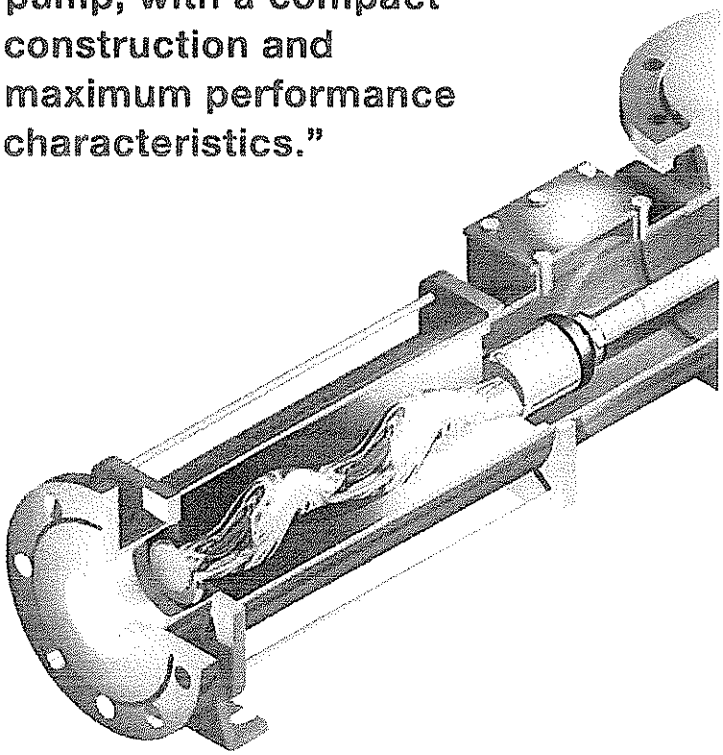

Materials of construction
Available in cast iron or stainless steel, with a choice of rotor and stator materials to suit individual applications e.g. hard chrome plated rotor or natural rubber stator.

High pressure / long haul pumping
Can offer considerable project cost savings by utilising small bore pipework and eliminating the need for a series of pumps, when pumping over long distances or with high head requirements.

Low running speeds
Reduced wear for a longer working pump life which extends the periods between routine maintenance. Think of the savings you could make on abrasive applications.

To minimise the impact on the environment, this has been printed on recycled paper

3/12/18

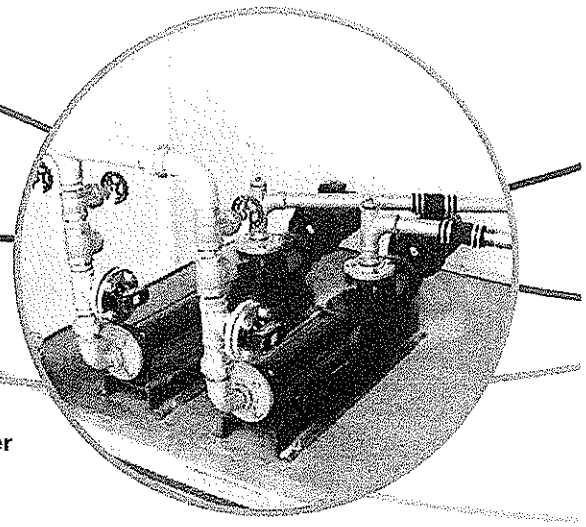

Waste water pumping

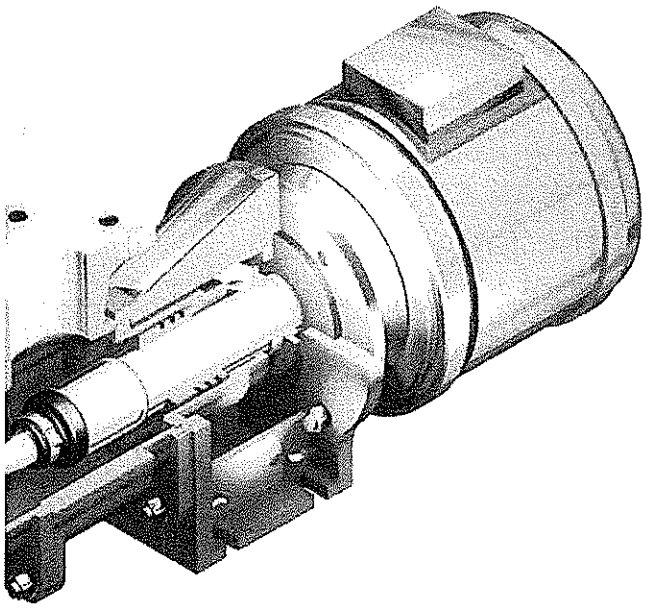

Compact unit
As the drive forms an integral part of the unit, the pump is ideal for space-saving installations.

Gentle pumping action
Minimises shear and crush damage to the pumped product.

Surface mounted
Making it easier, cleaner and less hazardous for maintenance.

Up to 8.5m suction lift
Deep sumps can be easily pumped without the use of submersible equipment.

Plug in shaft
Ease of maintenance when assembling or dismantling, with extraction facility.

Viscous products
The pump can be supplied with a square inlet and conveyor to assist viscous slurries into the pumping element.

Inspection cover
Available for applications where rag content is a problem.

Baseplate
Pumps are supplied on a baseplate to ease installation.

Sealed joints
Fully sealed drive train to maximise life and minimise downtime.

Shaft sealing options
Packed gland or single and double mechanical seals are available.

Versatile
Can be installed vertically or horizontally to suit the application. Can be run in either direction.

Robust drives
Specially selected drives and gearboxes for longer life. Options include electric motor drive units supplied as overhead vee belt driven, direct-coupled or variable speed drives with mechanical variable speed or frequency inverter.

Duracoat coating
Rotors can be supplied with Mono's range of specialist coatings to help extend the life of the rotors by increasing wear and corrosion resistance.

Handles gas entrainment
No air or gas locking in the pump. The positive seal formed by the interference fit between rotor and stator enables the pump to self prime and it also allows tri-phase liquids i.e. solids, gases and liquids to be handled easily.

3/12/18

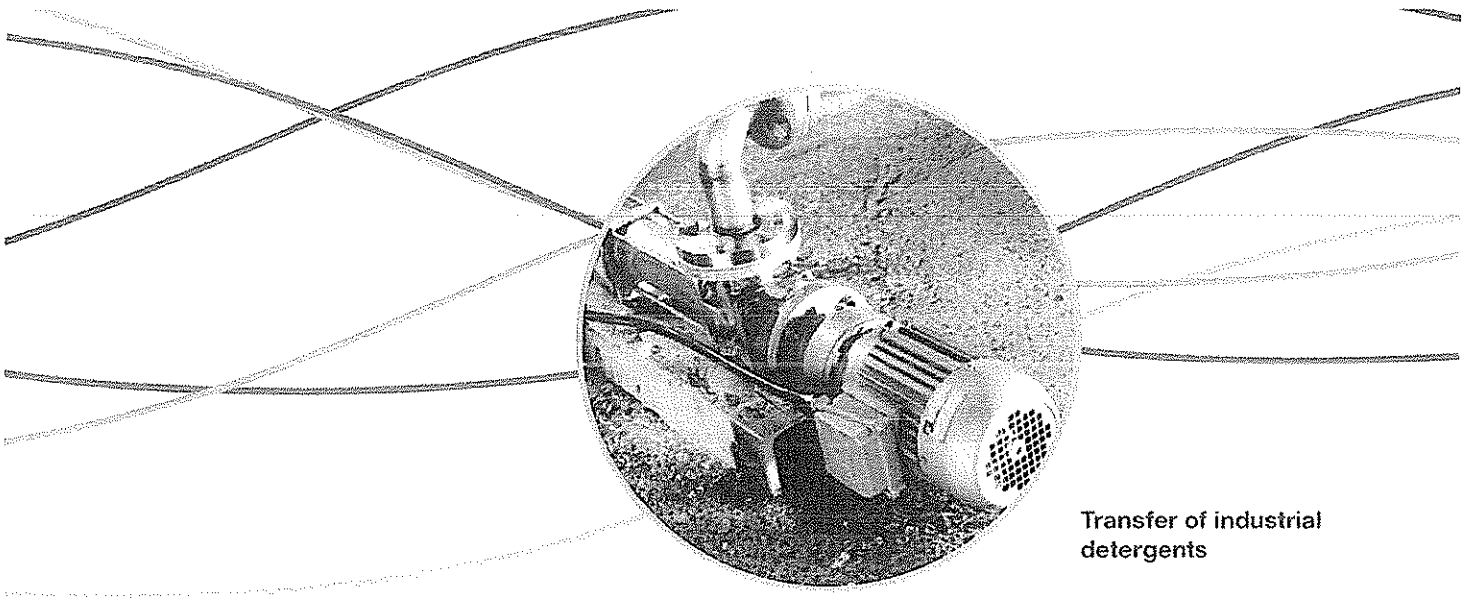

Transfer of industrial detergents

Product Dimensions

MODEL	A	A1	B	C	D	E	F	G	H
C21B	429	115	296	133	1¼"	144	85	120	160
C21D	573	250	440	133	1¼"	144	85	120	160
C22A	429	115	296	133	1¼"	144	85	120	160
C22B	573	250	440	133	1¼"	144	85	120	160
C22D	959	525	822	137	1½"	148	85	120	160
C23A	520	165	383	137	1½"	148	85	120	160
C23B	665	300	528	137	1½	148	85	120	160
C23K	665	300	528	137	1½	148	85	120	160

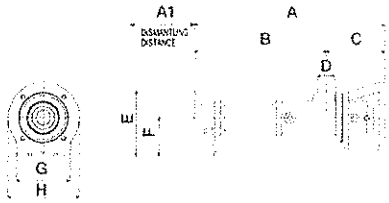

MODEL	A	A1	B	C	D	E	F	G	H
C1XK	750	300	593	157	50	190	85	120	160
C14K	986	455	756	230	65	227	112	140	200
C15K	1102	570	882	220	80	232	112	140	200
C16K	1272	680	1036	236	100	255	125	160	250
C17K	1478	800	1198	281	125	310	150	180	300
C18K	1654	880	1374	280	125	310	150	180	300
C19K	1856	990	1541	315	150	345	160	200	300
C1AK	2007	1100	1692	315	150	345	160	200	300
C1BK	2437	1210	2009	427	200	450	225	280	350
C13D	1160	525	930	230	65	227	112	140	200
C2XA	586	135	409	157	50	190	85	120	160
C2XB	749	315	592	157	50	227	112	120	160
C1XD	1363	650	1086	277	80	245	125	160	250
C14A	781	250	551	230	65	227	112	140	200
C14B	986	455	756	230	65	227	112	140	200
C14D	1462	780	1185	277	80	245	125	160	250
C15A	842	310	622	220	80	232	112	140	200
C15B	1159	570	882	277	80	245	125	160	250
C15D	1776	1005	1457	319	100	280	150	180	300
C16A	960	365	724	236	100	255	125	160	250
C16B	1355	680	1306	319	100	280	150	180	300
C16D	2181	1210	1813	369	125	320	160	200	300

MODEL	A	A1	B	C	D	E	F	G	H
C17A	1110	430	830	281	125	310	150	180	300
C17B	1478	800	1198	281	125	310	150	180	300
C17D	2626	1385	2224	402	150	410	225	280	350
C18A	1246	475	966	281	125	310	150	180	300
C18B	1742	880	1374	386	125	320	160	200	300
C18D	2786	1555	2384	402	150	410	225	280	350
C19A	1394	530	1079	315	150	345	160	200	300
C19B	1856	990	1541	315	150	345	160	200	300
C1AA	1476	610	1161	315	150	345	160	200	300
C1AB	2159	1100	1756	402	150	410	225	280	350
C1BA	1794	640	1366	427	200	450	225	280	350
C1BB	2591	255	2009	582	200	475	250	280	411
C1CA	2268	250	1611	657	250	511	250	340	411
C1CB	3146	250	2489	657	250	511	250	340	411
C1CK	3146	250	2489	657	250	511	250	340	411
C1DA	2569	250	1912	657	250	511	250	340	411

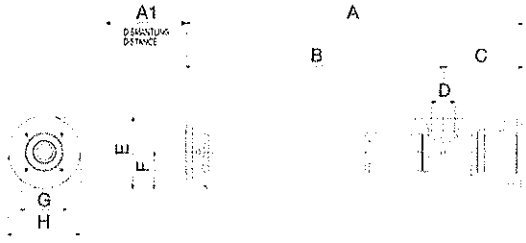

MODEL	A	A1	B	C	D	E	F	G	H
S14A	781	250	526	255	165x165	236	112	140	200
S14K	986	455	731	255	165x165	236	112	140	200
S15A	842	310	587	255	165x165	236	112	140	200
S15K	1102	570	847	255	165x165	236	112	140	200
S16A	960	365	674	286	200x200	260	125	160	250
S16K	1272	680	986	286	200x200	260	125	160	250
S17A	1110	430	777	333	240x240	310	150	180	300
S17K	1478	800	1145	333	240x240	310	150	180	300
S18A	1246	475	912	334	240x240	310	150	180	300
S18K	1654	880	1320	334	240x240	310	150	180	300

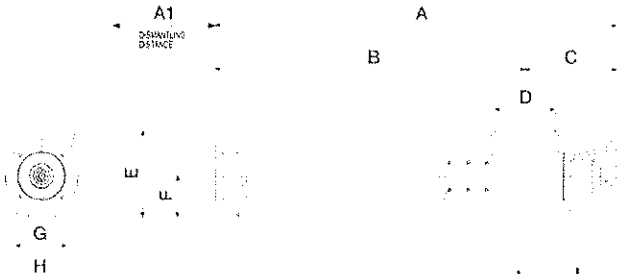

All dimensions in mm's, unless otherwise stated and for guidance only.
Dimension A1 is the preferred dismantling space. For full certified drawings, please contact Mono

3/12/18

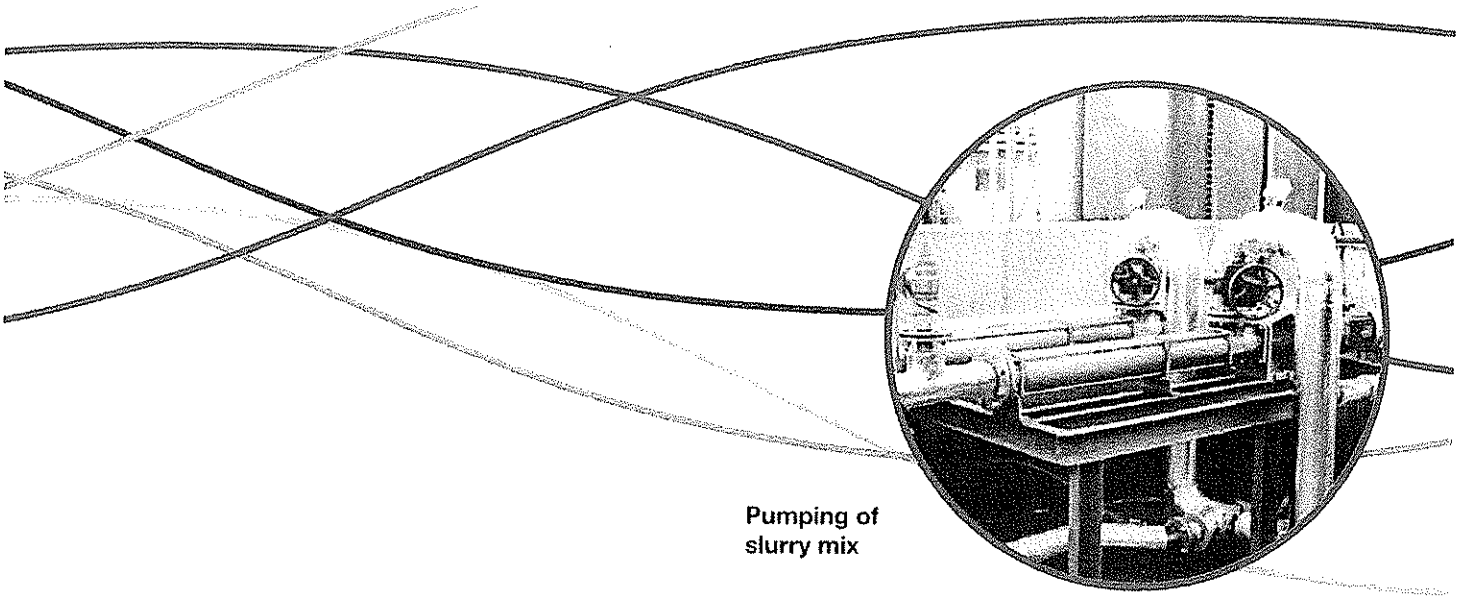

Pumping of slurry mix

Performance Data

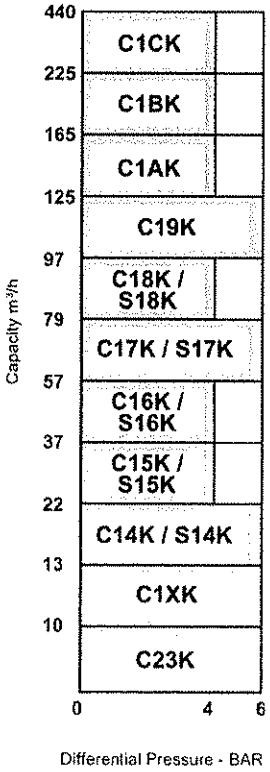

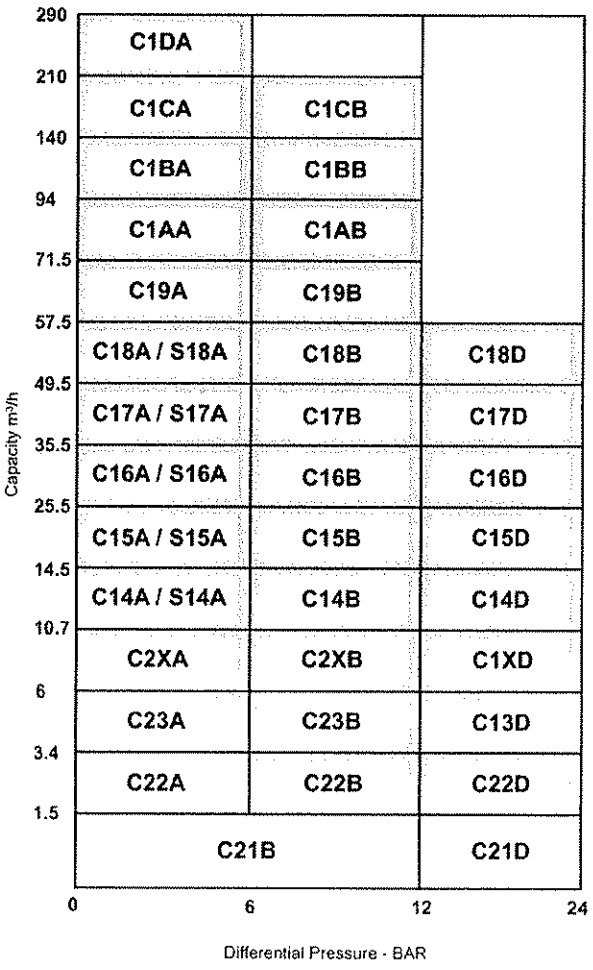

For guidance in selecting a pump, please contact Mono.

3/12/18

Motor/Baseplate Dimensions

MODEL	LENGTH	WIDTH	HEIGHT	MODEL	LENGTH	WIDTH	HEIGHT
C1XK	1304	300	304	C16A	1635	360	486
C14K	1665	300	475	C16B	2341	420	609
C15K	1777	360	475	C16D	3225	520	472
C16K	1947	360	488	C17A	2066	360	584
C17K	2464	360	609	C17B	2464	360	609
C18K	2640	420	609	C17D	3672	520	727
C19K	2902	420	649	C18A	2202	360	584
C1AK	3053	420	649	C18B	2788	420	649
C1BK	3481	520	537	C18D	3830	520	537
C13D	1835	360	475	C19A	2440	420	649
C2XA	1120	300	304	C19B	2902	420	649
C2XB	1329	300	304	C1AA	2522	420	649
C1XD	2038	420	488	C1AB	3205	520	727
C14A	1456	300	475	C1BA	2840	520	727
C14B	1665	300	475	C1BB	4350	752	892
C14D	2137	360	488	C1CA	4025	752	892
C15A	1517	300	475	C1CB	4900	778	943
C15B	1834	360	488	C1CK	4900	778	943
C15D	2782	420	609	C1DA	4350	752	892

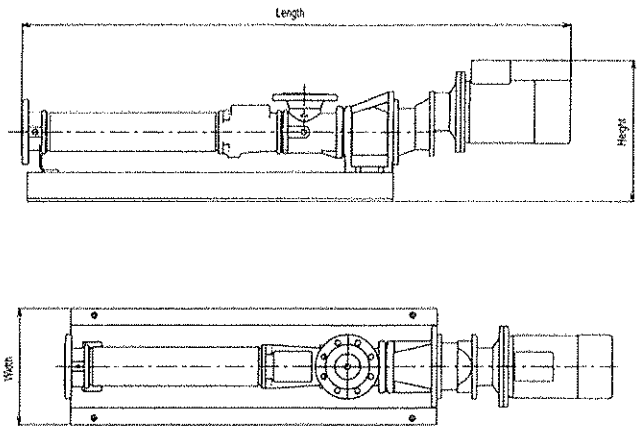

MODEL	LENGTH	WIDTH	HEIGHT	MODEL	LENGTH	WIDTH	HEIGHT
S14A	1456	300	475	C21B	984	300	304
S14K	1665	300	475	C21D	1149	300	304
S15A	1517	300	475	C22A	984	300	304
S15K	1777	360	475	C22B	1149	300	304
S16A	1635	360	488	C22D	1544	300	304
S16K	1947	360	488	C23A	1084	300	304
S17A	2066	360	584	C23B	1234	300	304
S17K	2464	360	609	C23K	1234	300	304
S18A	2202	360	584				
S18K	2640	420	609				

All dimensions in mm's and refer to the largest selected drive.
Dimensions are for guidance only, for full certified drawings, please contact Mono.

Europe

Mono Pumps Ltd, Martin Street
Audenshaw, Manchester
M34 5JA, England
T. +44 (0)161 339 9000
E. info@mono-pumps.com

D.M.I EST, 56 rue du Pont
88300 Rebeuville, France
T. +33 (0)3 29 94 26 88
E. dmi-est@dmi-est.fr

Americas

Monoflo, 9700 West Gulf Bank
Houston, Texas 77040, USA
T. +1 281 272 7700
E. inquire@monoflo.com

Monoflo S.A., Ing Huergo 2239
(1842) Monte Grande
Pcia. de Buenos Aires, Argentina
T. +54 11 4290 9940/50
E. info@monoflo.com.ar

Monoflo Canada
6010 - 53rd Ave
Alberta, Lloydminster
T9V2T2, Canada
T. +1 780 875 5584
E. info.monoflo@nov.com

Australasia

Mono Pumps (Australia) Pty Ltd
338-348 Lower Dandenong Road
Mordialloc, Victoria 3195
Australia
T. 1800 333 138
E. ozsales@mono-pumps.com

Mono Pumps (New Zealand) Ltd
PO Box 71-021, Fremlin Place
Avondale, Auckland 7
New Zealand
T. +64 (0)9 829 0333
E. info@mono-pumps.co.nz

Asia

Mono Pumps Ltd
No. 500 YaGang Road
Lujia Village, Malu
Jiading District
Shanghai 201801, P.R. China
T. +86 (0)21 5915 7168
E. monoshanghai@nov.com

www.mono-pumps.com

Published information other than that marked CERTIFIED does not extend any warranty or representation, expressed or implied, regarding these products. Any such warranties or other terms and conditions of sales and products shall be in accordance with Mono Pumps Limited standard terms and conditions of sale, available on request.

© Mono Pumps Limited May 2009 Literature reference: MPSB/01/01/R3

Mono® is a registered trademark of Mono Pumps Ltd
Registered in England No 300721

Mono®

One Company, Unlimited Solutions

Produced on recycled paper

3/12/18

Lloyd's Register
LRQA

Certificate of Approval

This is to certify that the Management System of:

NOV Process & Flow Technologies UK Limited

Greengate, Middleton, Manchester, M24 1SA, United Kingdom
has been approved by LRQA to the following standards:

ISO 9001:2008

David Derrick
Issued By: Lloyd's Register Quality Assurance Ltd

Current Issue Date: 11 December 2016
Expiry Date: 14 September 2018
Certificate Identity Number: 10006275

Original Approvals:
ISO 9001 1 June 1990

Approval Numbers: ISO 9001 – 00004265

The scope of this approval is applicable to:

Design, manufacture, installation, service and repair of progressing cavity positive displacement pumps, pumping systems , screening equipment, disintegrators, drive arrangements and ancillary plant and provision of associated spares

UKAS
MANAGEMENT
SYSTEMS
001

3/12/18

Lloyd's Register Group Limited, its affiliates and subsidiaries, including Lloyd's Register Quality Assurance Limited (LRQA), and their respective officers, employees or agents are, individually and collectively, referred to in this clause as 'Lloyd's Register'. Lloyd's Register assumes no responsibility and shall not be liable to any person for any loss, damage or expense caused by reliance on the information or advice in this document or howsoever provided, unless that person has signed a contract with the relevant Lloyd's Register entity for the provision of this information or advice and in that case any responsibility or liability is exclusively on the terms and conditions set out in that contract.
Issued By: Lloyd's Register Quality Assurance Ltd 1 Trinity Park, Bickenhill Lane, Birmingham B37 7ES, United Kingdom

24 June 2015

For the attention of the Accounts Manager

Dear Sir or Madam

Change of Name for Mono Pumps Limited

With effect from 1 July 2015, Mono Pumps Limited will change its name to **NOV Process & Flow Technologies UK Limited.**

<u>What is changing and why?</u>
The only detail that is changing is the legal entity name. Mono Pumps Limited will be renamed **NOV Process & Flow Technologies UK Limited**. The reason for the change of name is that the entity now supplies an increased number of branded products and it is no longer relevant to solely refer to one of those brands in our legal entity name.

<u>What is remaining the same?</u>
This is simply a change of name for a legal entity you are already trading with. The company is still registered in England under registration number 00300721 and its registered office remains Stonedale Road, Oldends Lane Industrial Estate, Stonehouse, Gloucestershire, GL10 3RQ.
The VAT number remains GB 582 8958 76.

You can reach all of your contacts as normal at Greengate, Middleton, Manchester, M24 1SA.

Our Bank details will remain the same although the bank account name will change as follows:

Account Name:	NOV Process & Flow Technologies UK Limited
Bank:	Barclays Bank Plc
Address:	163-165 Union Street Aberdeen, AB11 6AL
Sort Code:	20-00-77
Swift:	BARCGB22

Account **Sterling**:
Account Number : 73135497
IBAN : GB23BARC 200077 73135497

Account US Dollar:
Account Number: 54306488
IBAN : GB58BARC 200077 54306488

Account Euro:
Account Number: 89853577
IBAN : GB05BARC 200077 89853577

+44(0) 161 339 9000

NOV Process & Flow Technologies UK Limited
Greengate Way
Middleton
Manchester
M24 1SA

NOV Process & Flow Technologies UK Limited
Registered in England No: 00300721
Registered Office:
Stonedale Road
Oldends Lane Industrial Estate
Stonehouse, Gloucestershire
GL10 3RQ

3/12/18

Cheques should be made payable to NOV Process & Flow Technologies UK Limited.

Should you have any questions regarding this letter, please contact our accounts receivable department on +44 (0)161 339 9000.

Yours faithfully

Alastair Fleming
UK Country Controller

+44(0) 161 339 9000

NOV Process & Flow Technologies UK Limited
Greengate Way
Middleton
Manchester
M24 1SA

NOV Process & Flow Technologies UK Limited
Registered in England No: 00300721
Registered Office:
Stonedale Road
Oldends Lane Industrial Estate
Stonehouse, Gloucestershire
GL10 3RQ

3/12/18

8.2 SLUDGE HOLDING TANK

Mixer data sheet

WILO SE, Werk Hof
Heimgartenstraße 1-3
Postfach 3309 - D-95030 Hof/Saale
T: +49 9281 974-540 F: +49 9281 974-133
ctwwt@wilo.com www.wilo.com

ID	17-ORH-GR-AB-1-0001
Project country	Greece
Project name	WWTP MONDENEGRO
Position	1 Anoxic tank
Date	2017-09-01
Enquiry	

Data for selection

Mixed liquid

Kind	Activated sludge	
Density	1000	kg/m³
pH value	7	
Temperature	20	°C
Dry solids content	0,5	%
Flow behaviour	Newton flow	
Kind of thickening	None	
Additional thickener	No	

Solids

Origin	Municipal	
Kind	Sludge	
Solid size	Not determined	

Mixing task

Operating mode	Continuous	
Mixing task	Suspend	
Average calculated flow velocity[1]	0,3	m/s

Tank

Material	Concrete	
Outlet	On bottom, laterally at the tank edge	
Tank shape	Round tank	
Tank volume	60,87	m³
Vertical / inclined walls	Tank with vertical walls	
Upper diameter	5	m
Tank height	3,1	m
Maximum filling level	3,1	m
Minimum filling level	3,1	m
Relevant filling level	3,1	m

Preparation

Preparation	Screen with gap width < 10 mm, but no pre-clarification

3/12/18

WILO SE, Werk Hof
Heimgartenstraße 1-3
Postfach 3309 - D-95030 Hof/Saale
T: +49 9281 974-540 F: +49 9281 974-133
ctwwt@wilo.com www.wilo.com

ID	17-ORH-GR-AB-1-0001
Project country	Greece
Project name	WWTP MONDENEGRO
Position	1 Anoxic tank
Date	2017-09-01
Enquiry	

Aeration

Kind	Without

Tank particularities

Default

Remarks regarding the selection process

The mixing result depends on the functional quality of the plant equipment in the mechanical treatment stage (preliminary treatment). Mineral fractions (grit and sand) must be always excluded from the process and cannot be kept in suspension. It is absolutely required to check the values mentioned above with the actual values on site.

3/12/18

WILO SE, Werk Hof
Heimgartenstraße 1-3
Postfach 3309 - D-95030 Hof/Saale
T: +49 9281 974-540 F: +49 9281 974-133
ctwwt@wilo.com www.wilo.com

ID	17-ORH-GR-AB-1-0001
Project country	Greece
Project name	WWTP MONDENEGRO
Position	1 Anoxic tank
Date	2017-09-01
Enquiry	

Selection of submersible mixers

Proposal

Type	TR 21.145-4/11 S14	
Quantity	1	
Frequency	50	Hz
Rated power	1,3	kW
Propeller speed	1390	1/min
Power factor (ISO 21630)	200	N/kW
Propeller diameter	0,21	m
Maximum power input	1,74	kW
Power input in duty point	*1 1,2	kW
System-dependent power input	*2 1,08	kW
Power density	*3 19,7	W/m³
System-dependent power density	*4 17,7	W/m³
Distance to water surface	0,2	m

*1 Measurement at static thrust acc. to ISO 21630 (inflow velocity ~0, Open Sea conditions).
*2 The power consumption of the mixer will be reduced in proportion to the flow velocity which is generated in the tank.
*3 According to ISO 21630.
*4 According to site conditions.

Important note

Installation of the mixer(s) according to installation sketch. Before installing the mixers, the up-to-date tank plans must be submitted without previous request to WILO SE, Hof for revision.

To guarantee a continuous operation, the minimum water cover above the propeller specified by WILO must be ensured.
Please check if our basic data are identical to your application and, if necessary, inform us in writing about modifications/objections. The aforementioned mixer(s) selection data are integral part of our warranty, whereas our warranty comes only into effect, when the submersible mixers are installed according to our recommendation. Because the overall function depends considerably on the correct positioning of the submersible mixers, we will not accept any warranty claims which result from positioning which we did not approve explicitly. Also zones of weak flow due to the tank geometry are not part of our warranty. The values of maximum power input, power input in the duty point and energy density are valid for clean water. Furthermore the use of our submersible mixers in patented procedures or under trade mark rights of third parties is excluded from our liability.

[1]In case of rectangular or round tanks the average flow velocity above the tank section cannot be guaranteed.
For the selected tank shape no directed circulating flow can be generated for physical reasons. The calculated average flow velocity refers only to an undirected turbulent flow.

All attached notes relating to the product and the selection are part of the technical selection of WILO SE.

3/12/18

2

Installation proposal

WILO SE, Werk Hof
Heimgartenstraße 1-3
Postfach 3309 - D-95030 Hof/Saale
T: +49 9281 974-540 F: +49 9281 974-133
ctwwt@wilo.com www.wilo.com

ID	17-ORH-GR-AB-1-0001
Project country	Greece
Project name	WWTP MONDENEGRO
Position	1 Anoxic tank
Date	2017-09-01
Mixer	TR 21.145-4/11 S14
Enquiry	

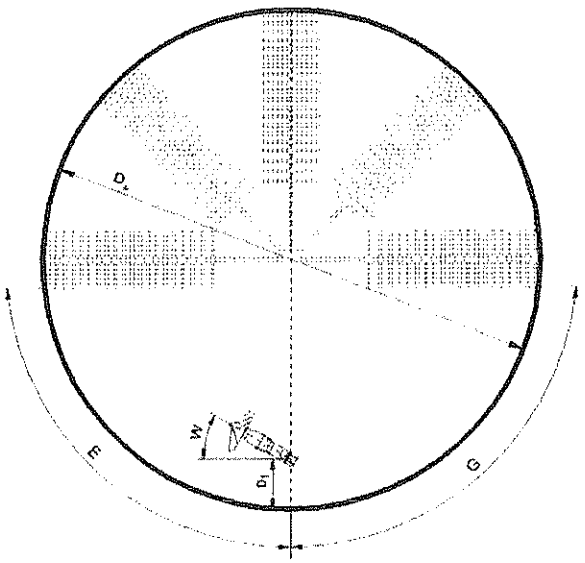

Installation recommendation regarding to miscellaneous minimum distances

n *	1	
W	45	°
G	1	m
NI *	1	

Du	5	m
E	1,5	m
D1	0,5	m

* n = no. of mixer per tank, NI = no. of installation positions per tank

3/12/18

WILO SE, Werk Hof
Heimgartenstraße 1-3
Postfach 3309 - D-95030 Hof/Saale
T: +49 9281 974-540 F: +49 9281 974-133
ctwwt@wilo.com www.wilo.com

ID	17-ORH-GR-AB-1-0001
Project country	Greece
Project name	WWTP MONDENEGRO
Position	1 Anoxic tank
Date	2017-09-01
Mixer	TR 21.145-4/11 S14
Enquiry	

Hints

The enclosed installation proposal is a schematic drawing and not according to scale. It serves as orientation guide. In case of order, the feasibility of this installation has to be matched with the tank drawing and the actual conditions. If there is an inflow and/or outflow in the immediate vicinity of the mixer, the mixer position must be checked based on updated tank plans to avoid bad influences on the mixer and short-circuit flows.

3/12/18

Abmessungen für Tauchmotorrührwerk
MINIPROP TR 21

Dimensions of Submersible mixer **MINIPROP TR 21**

Dimensions du circulateur immergé **MINIPROP TR 21**

wilo
Heimgartenstraße 1-3 D-95030 Hof/Saale
Telefon +49 9281 974-0 Fax +49 9281 96528
www.wilo.com E-Mail: info@wilo.com

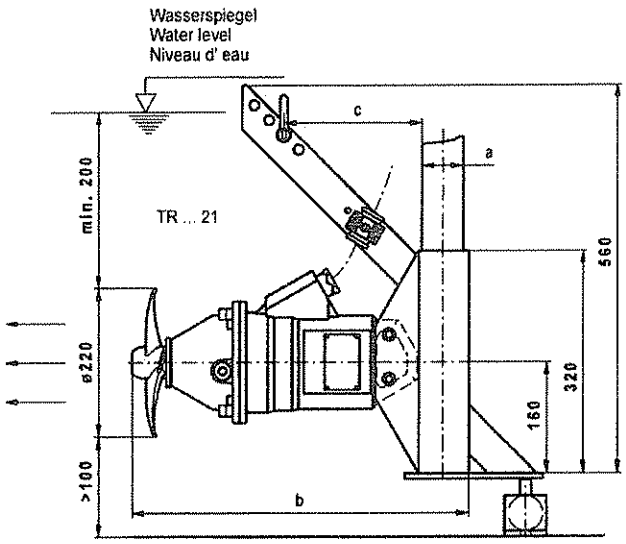

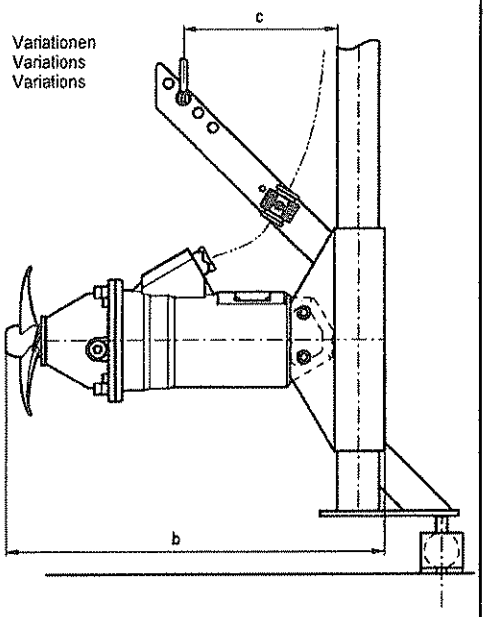

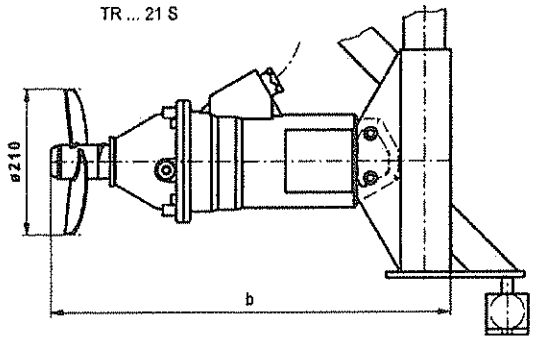

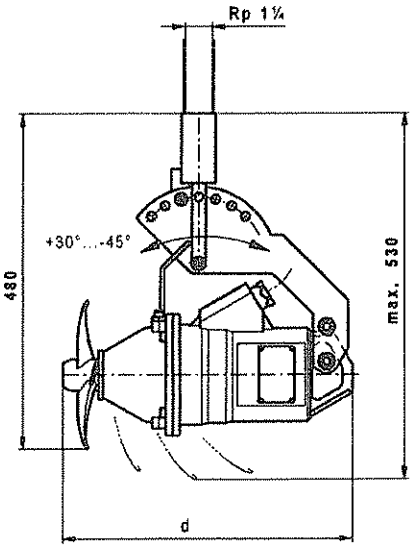

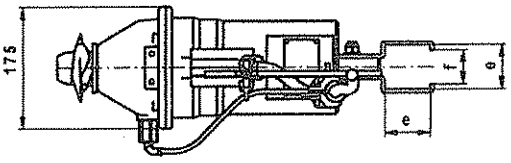

Aufhängung
Suspension
Système de relévement

Motor / Motor type/ Type de moteur	T12G-4/6			T12G-4/11		
Gestänge-Gr./ Size of pipes / Dimension du tube	a = 60x60	a = 50x50	Suspension	a = 60x60	a = 50x50	Suspension
b	490/525*	480/515*		545/580*	535/570*	
c	200	200		220	220	
d			415/450*			470/505*
e	64	54		64	54	
f	40	32		40	32	
Gewicht / Weight / Poids	max. 32kg/35kg*			max. 37kg/40kg*		

* mit Stahlpropeller
with steel propeller
avec hélice en acier

Maßstab: 1:10 Technische Änderungen vorbehalten - Technical changes reserved - Modifications techniques réservées

Datum: 02.06.14 NP

Mb015.prt

3/12/18

Pioneering for You

Data sheet
Wilo-EMU TR 21.145-4/11 S14

Design / Direction of rotation

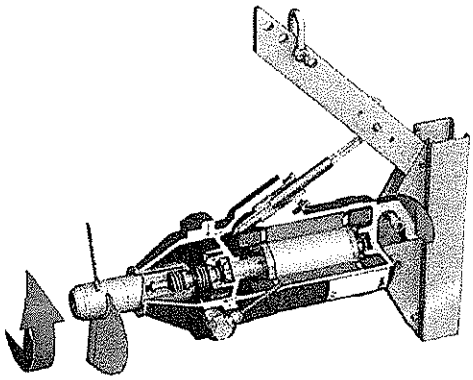

Technical data	
Unit	
Power consumption $P_{1.1}$	1.2 kW
Max. thrust F	240 N
Weight of unit m	28 kg
Max. weight* m	40 kg
Protection class	IP 68
Explosion protection	ATEX, FM
Ex classification ATEX	II 2G EEx d IIB T4
Ex classification FM	CLASS I, DIV. 1, GROUPS C, D; CLASS II, DIV. 1, GROUPS E, F, G; CLASS III

* ∞ maximum weight including accessories

Propeller	
Propeller model	2-blade propeller with self-cleaning hub; backward-curved as a result clogging- and entwining-free
Nominal propeller diameter	210 mm
Propeller speed n	1392 rpm
Transmission ratio	1
Fill quantities and types	
Filling sealing chamber	White oil
Fill level sealing chamber V	0.35 l

Motor data	
Type of motor	T 12-4/11 (Ex)
Motor type	Submersible motor according to DIN/VDE 0530 (IEC 34)
Mains connection	3~400 V, 50 Hz
Rated current I_N	3.3 A
Starting current - direct I_A	16 A
Starting current - star-delta I_A	6 A
Power consumption P_1	1.74 kW
Rated power P_2	1.3 kW
Rated speed n	1392 rpm
Motor efficiency level	-
Efficiency η_M	75.0 %
Power factor $\cos \varphi$	0.76
Fluid temperature T	+3 ... +40 °C
Max. immersion depth	20 m
Insulation class	H
Max. switching frequency t	15 /h
min. switching break t	3 min
Starting torque M	19.8 Nm
Moment of inertia	0.0021 kg/m^2
Motor bearings	1 grooved ball bearing
Materials	
Motor housing	EN-GJL-250
Motor shaft	1.4021
Static seal	FPM
Sealing on pump side	SiC/SiC
Sealing on motor side	SiC/SiC
Propeller	1.4571

3/72/18

8.3 SLUDGE MECHANICAL DEWATERING UNIT

3/12/18

Data/Date: 2017/09/04
To: KARKANIAS ENVIRONMENTAL TECHNOLOGY SA

Food & Water

Alfa Laval AEBE

20th Km Lavrion Avenue Thesis Karella
19400 Koropi – Attica
Greece

www.alfalaval.gr

A COMPLETE SPECTRUM
of wastewater treatment equipment

OFFER N°: 170904

3/12/18

1. INDEX

1. INDEX 2
2. INTRODUCTION 3
3. PROJECT DATA 4
4. GENERAL DESCRIPTION 6
5. SPARE & WEAR PARTS FOR 1 YEAR OF COMMISSIONING 13
6. BATTERY LIMITS 14
7. EXCLUSIONS 15

31/12/18

2. INTRODUCTION

Dear Sirs,
thank you very much for your inquiry. We are pleased to provide our Quotation for **N. 1 ALFA LAVAL dencanter centrifuge model ALDEC 45 VFD,** which is recommended by Alfa Laval Corporate AEBE (AL) for the *WWTP DANILOVDRAD MONTENEGRO.*

The equipment described in this proposal is recommended on the base of the received requirements.

Our local Service can be on your site for maintenance, repairs and installation optimization very quickly. Spare parts are stored in 3 Regional Distribution Centers (Netherlands, Singapore, USA) to guarantee spares delivery in less than 48 hours.

For further details we invite you to examine also the possible documents attached.

Finally, for any further questions or clarifications about it you can contact us directly:

George Asteris
Regional Sales Manager, Food & Water Division
Tel direct: +30 210 668 35 72 mobile: +30 6932402332
george.asteris@alfalaval.com

3/12/18

3. PROJECT DATA

3.1 GENERAL DATA

Sludge origin	Municipal
Sludge type	Oxidation Ditch Sludge
Duty	Dewatering

Hydraulic feed flow rate of the equipment (m^3/h)	≤5
Sludge feed concentration (%)	≤2,5
Solids load (KgSS/h)	≤125
Estimated concentration of inlet volatiles (%)	≤70

Centrifuge Performance expected:

Expected cake solids (%)	Dewatering: ≥23±1
Expected recovery (%)	≥95
Expected polymer dosage consumption (Kg/t SS)	≤10 The expected consumption refers to a polyeletrolite with an activity of 100%. Possible changes in the sludge type could required the change of the used polyelectrolyte terms of type and quantity. The control, choice and supply of the polyelctrtolyte according to the sludge carachteristics is part of the WWTP management and is a customer's responsibility. The use of a polyeletrolyte not correctly selected can influence the decanter performances.

3/12/18

3.2 HAZARDOUS COMPOUNDS

EROSIVE COMPOUNDS*	Silicates e Sands > 500 ppm
CORROSIVE COMPOUNDS	Cl- Fl- and other corrosive coumpounds
OTHER COMPOUNDS	FeO_2 and F_eO_3
PARTICULATE (organic and inorganic) WITH DIMENSIONS *	> 5mm

*=we suggest, if not already existing, to install before decanter a macerator and a grit chamber.

3/12/18

4. GENERAL DESCRIPTION

4.1 CENTRIFUGE MODEL ALDEC GENERAL DESCRIPTION

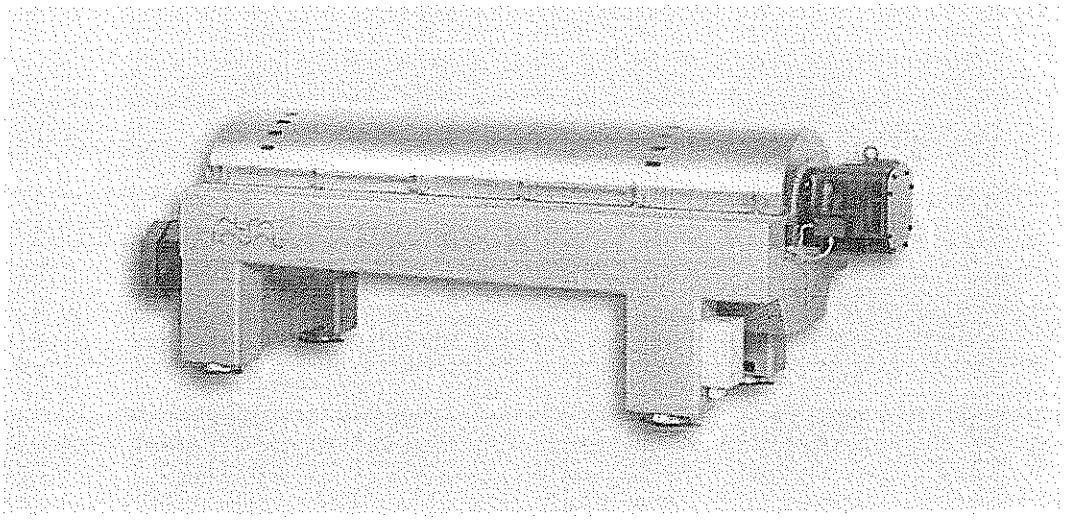

Alfa Laval Decanter ALDEC

The ALDEC is an open, non-pressured horizontal centrifuge. It features a solid horizontal bowl and scroll type conveyor, with counter current flow design.

Gearbox
The gearbox is equipped with a three-stage planetary gear reducer unit which controls the maximum differential speed between the centrifuge bowl and conveyor.

Frame and Casing
The frame and casing is a box beam profile type with integral casing. The inside surface of the casing consists of steel liners in the discharge areas and a painted surface in the neutral compartment.

Conveyor
The screw conveyor includes a forward type feed zone and a baffle disc.

Bowl
The bowl is manufactured from a centrifugal fusion.
Prior to final machining, all surfaces are examined for cracks, shrinkage, prodity or other defects.
The clarified liquid leaves the bowl by flowing over adjustable plate dams into the casing.

Wear Protection
The conveyor flights are protected with TM40 flame sprayed tungsten carbide on the tip only.
The conveyor feed zone is protected with flame sprayed tungsten carbide.
The solids dicharge area is protected with a wear liner of tungsten carbide.
A wear liner is installed in the upper casing.

3/12/18

Electrical Components and Control Systems

The electrical components consist of a main-motor drive and a back-drive motor type ABB with VFD.

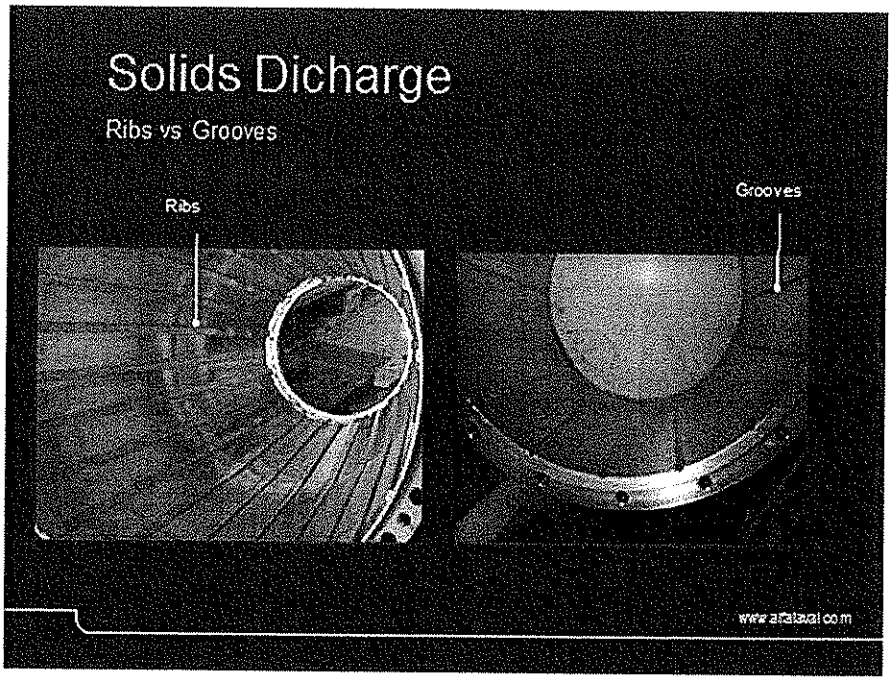

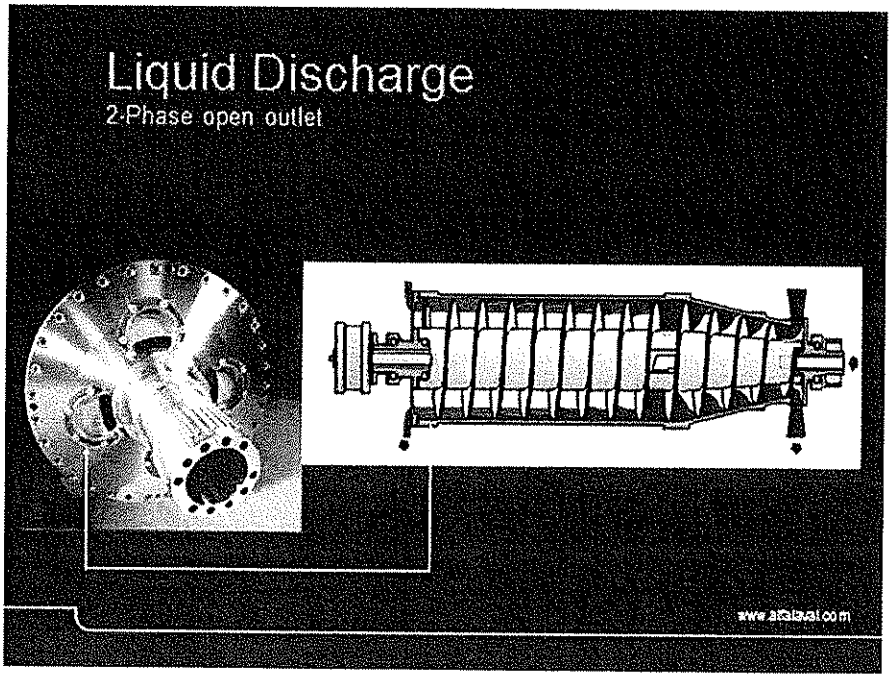

3/12/18

4.2 DATA SHEET ALDEC 45

N° 1 BOWL	
Diameter	360 mm
Lenght	1512 mm
Maximum main speed	4.200 rpm
G-force at operating speed	3.549 g
Material - bowl shell	AISI 316
Material - hubs	Duplex SS
Materiale – bolts	AISI 316
Beach angle	20°
WEAR PROTECTION	
Solids trasportation aids, cylindrical and taper section	Ribs in AISI 316
Solids dicharge	Tungsten carbide
N°1 CONVEYOR	
Pitch	130 mm
Flight thickness	4 mm
Material flights and hub	AISI 316
WEAR PROTECTION	
Flame sprayed tungsten carbide on tip flights.	
N°1 FRAME AND CASING	
Type frame-casing	Box beam profile with integral casing
Material - frame	Mild steel colour medium blue NCS 3560 R75B
Material casing	SS AISI 316
Wear protection	Wear liner in AISI 304 on discharge area/ discharge clarified
N°1 MAIN MOTOR	
Type ABB, VFD 15 kW , 3x380V, 50 Hz. IP55 type.	
N° 1 BACK DRIVE	
Type ABB, VFD 5.5 kW , 3x380V, 50 Hz. IP55 type.	
N° 1 GEAR BOX	
Type	Planetary 2 stage
Ratio	1: 159
Max. torque	2,5 kNm
Max differential speed and torque	44 rpm at 2,5 kNm
Differenzial speed conveyor regulation	by inverter
N°1 CONTROL SYSTEM	
Type BCC. See decription below.	
LUBRIFICATION	
Grease.	

3/12/18

4.3 NOISE DECLARATION ALDEC 45

RUMORE ALDEC 45		
Bowl speed [rpm]	Sound power L_{wAd} [B(A) re 1pW]	Sound pressure L_{pAd} [dB(A) re 20mPa]
4.200	9,7	79

L_{wAd} : declared A-weighted sound power level from the decanter.
L_{pAd} : declared A-weighted emission sound pressure level in a free field over a reflecting plane at 1 m distance from the decanter

Uncertainty on declared values:
L_{wAd} : K_{wA} = 2 dB
L_{pAd} : K_{pA} = 4 dB

The emission sound power level is measured according to ISO 9614-2 while operating the decanter with water as process medium. The sound pressure level is determined from the measured sound power level according to EN ISO 11203.

The sound pressure level can vary – 1 dB a + 2 dB at different positions around the decanter.
Noise emission data for the decanter declared in accordance with the requirements in EN ISO 4871 e EN 12547.

4.4 OTHER EQUIPMENTS

N°2 CONTROL PANEL	• Control panel in compliance with the technical specification.
OTHER	• N.1 Intermediate Kit conveyor bearings • N.1 set of liquid levels • N.1 set of special tools • N. 1 instruction manual in english + N. 1 copy on CD • Packing according to our standard
ENGINEERING	Unless otherwise specified the decanter will be installed according to the P&ID attached.

3/12/18

4.5 DECANTER OPERATING PRINCIPLE

WORKING OPERATION

The solid-liquid separation takes place in a horizontal cylindrical bowl equipped with a screw conveyor. The feed enters the decanter at the intersection of the conical and the cylindrical part of the bowl through a central feed pipe in the hollow drive shaft. After leaving the feed pipe, the feed suspension is distributed into the rotatign liquid in the bowl and smoothly accelerated to the full rotational speed. The centrifugal force makes the solids settle at the bowl shell. The screw conveyor continuously transports the solids toward the conical end of the bowl and through conical bowl part.

The separation takes place throughout the total length of the cylindrical part of the bowl, and the clarified liquid discharges at the large end where it flows over the rim of exchangeable and/or adjustable plate dams or power tubes.

The solids are discharged from the small end by centrifugal force through outlet opening.

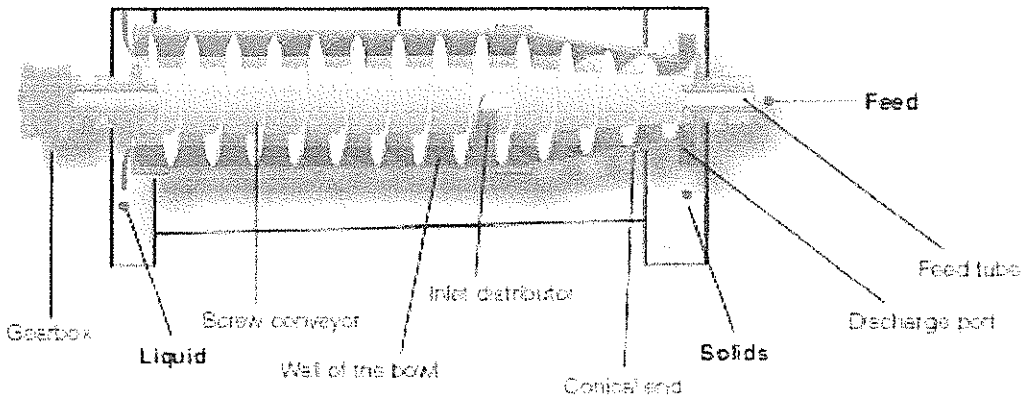

DRIVE SYSTEM

The decanter is driven by an electric motor. The motor shaft carries a drive pulley, and motive power is trasmitted through V-belts to the bowl pulley to drive the bowl.
Power is transferred to the conveyor via a planetary gearbox.

Gearbox (GB) lower the supplied power from the BackDrive (BD) and allows for the torque required by the conveyor. It's all about controlling the Sunwheel Shaft (SS) speed.

The SS is connected directly to the BD system. Controlling the SS speed controls the speed of the Spline shaft which is directly conneted to the conveyor speed and thereby controls the differential speed. The planetary GB has two stages. To create a differential speed with a planetary GB it's required to brake the SS duting normal operation. To run with higher differential speed the direction of SS hence the direction of the BD needs to be reversed.

3/12/18

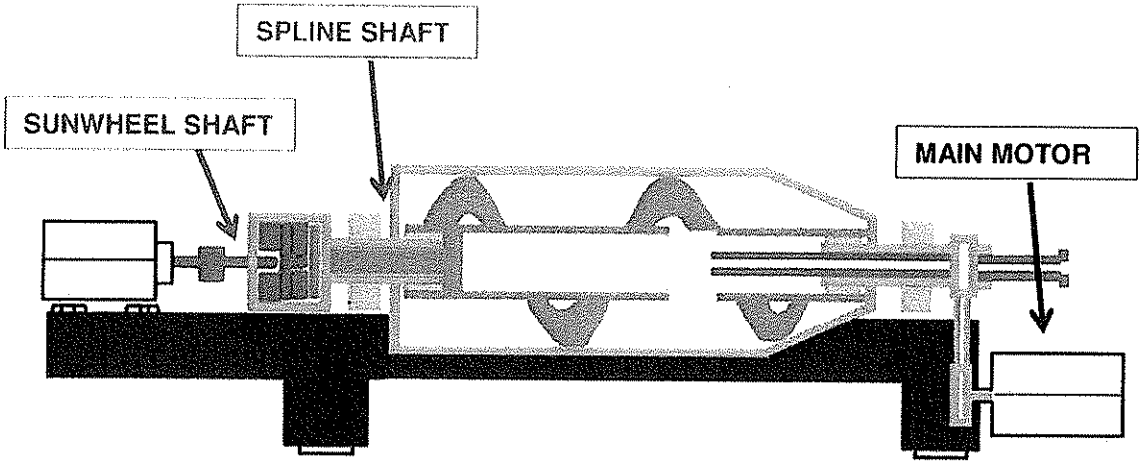

THE BASIC CORE CONTROLLER

The differential speed is controlled by a decanter controller, which takes care of all basic control functions related to the decanter. Each decanter is delivered with the Basic Core Controller (**BCC**). This control package is capable of fully controlling the decanter operation, ensuring the most efficient performance and keeping costs for installation, commissioning, operation and maintenance to a minimum.

The decanter BCC control system consist of:

- HMI panel,
- Core Controller;
- Frequency Drives.

The components are connected with bus communication as illustated below.

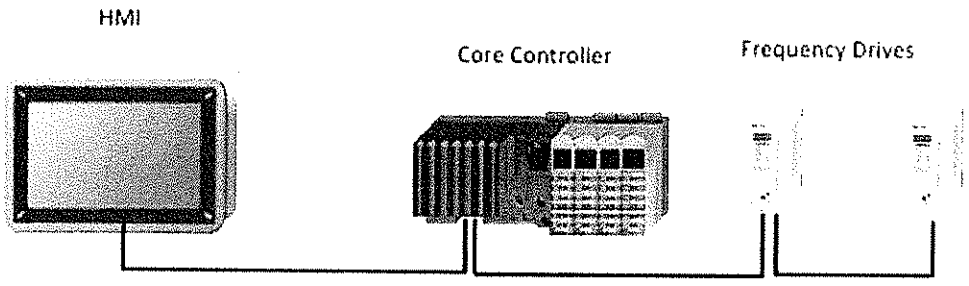

- **HMI panel**: is a 7"touch panel and handles the interaction between the human user and the control system (view machine and process variables, issue commands, adjust setpoint, acknoledge alarms, manual control of equipment and signal forcing and system configuration);
- **CORE CONTROLLER**: the essential job of the Core Controller CPU is to control the differential speed of the screw conveyor inside the decanter. Other tasks of the Core

3/12/18

Controller are: control the torque on the screw conveyor, maintain the control sequence of the machine and control auxiliary equipment and processes;

- **FREQUENCY DRIVES**: control the speed of the maindrive and backdrive motors on the decanter. Parameter setup, speed setpoints, alarm handling etc. in the frequency drives is managed by the Core Controller.

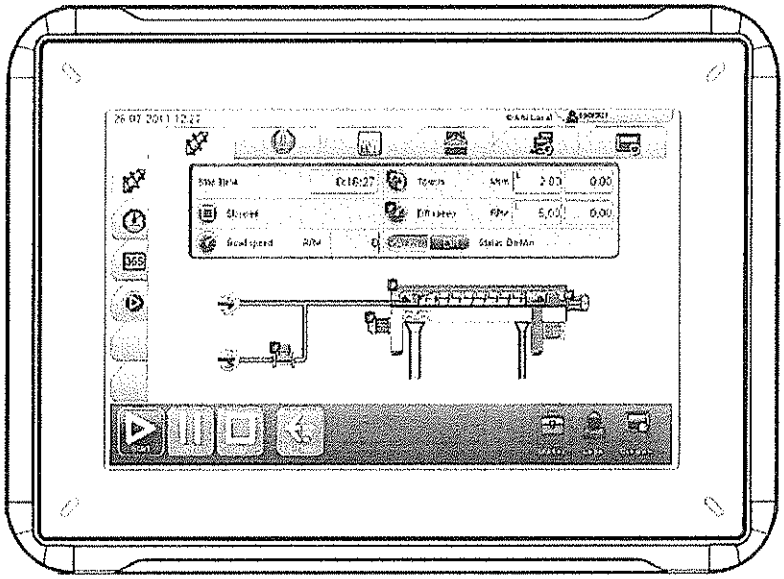

3/12/18

5. SPARE & WEAR PARTS FOR 1 YEAR OF COMMISSIONING

Listed below are the spare parts for 1 year of operation. They are provided with the decanter.

Description	Serial number	Quantity
GEAR OIL 4 L	6120367110	2
GREASE	6120367150	6
O-RING	6116720741	2
GASKET	52259102	4
BALL BEARING	1217400	2
LIP SEAL	6116732324	2

No wear parts are required.

3/12/18

6. BATTERY LIMITS

- Electric energy: at electrical terminal and decanter motors
(if control panel is supplied by AL: at electric switches)
- Sludge to treat: at sludge inlet connection installed as shown in the drawing attached (point A)
- Polyelectrolyte in emulsion already mixed: at inlet connection as shown in the drawing attached (point D)

3/12/18

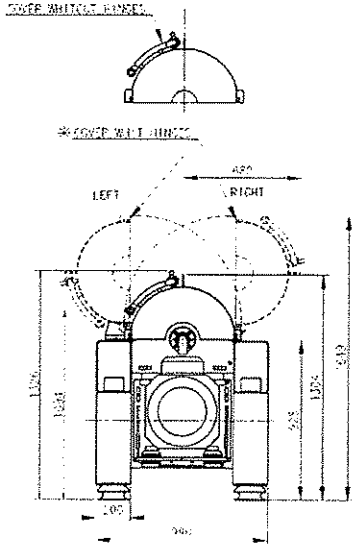

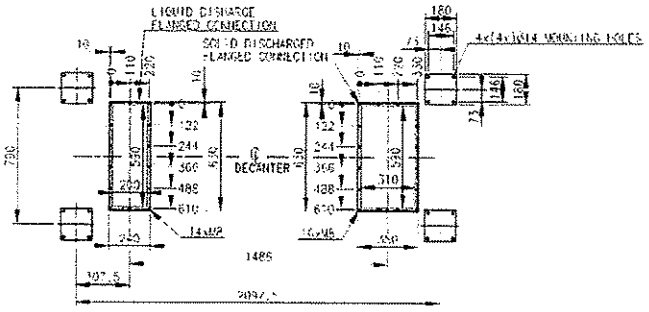

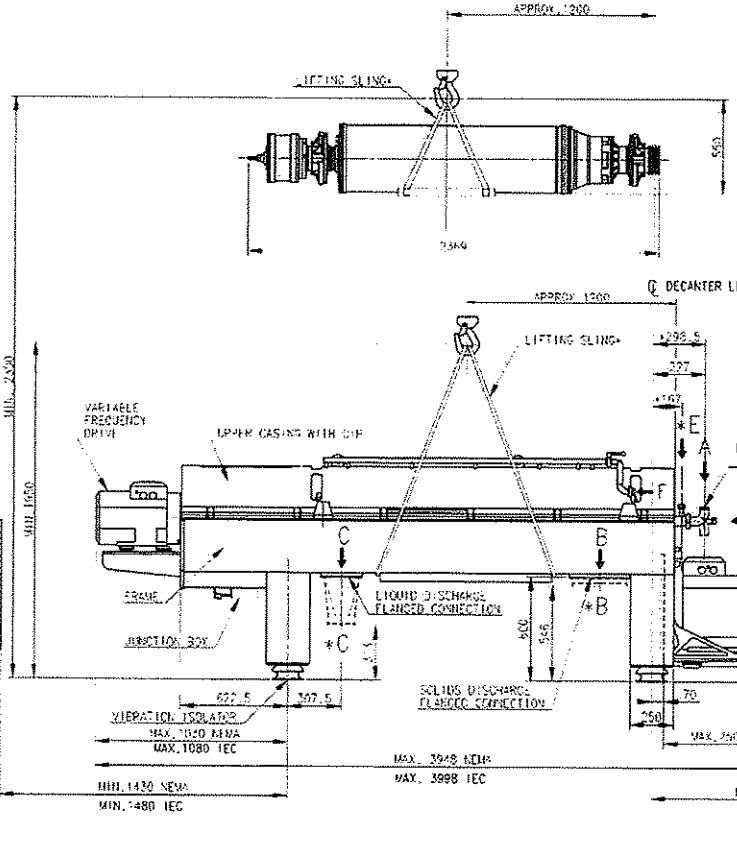

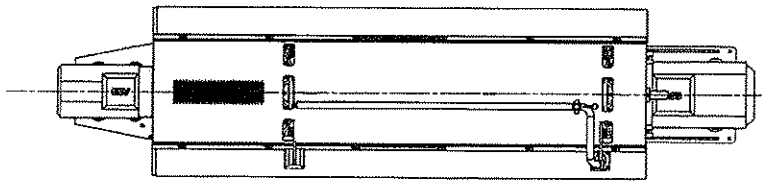

APPROXIMATE WEIGHTS:

TOTAL WEIGHT OF EMPTY DECANTER	2300kg	5071lbs
ROTATING ASSY. INCL. PILLOW BLOCKS	600kg	1323lbs
CPL. FRAME ASSY. EXCL. MAIN MOTOR AND BOT. ASSY.	1400kg	3087lbs
MAIN MOTOR INCL. MOTOR PLATE AND PULLEY	300kg	662lbs
UPPER CASING	150kg	331lbs
GEAR BOX	900kg	1984lbs
MIN. CRANE CAPACITY FOR LIFTING OF ROTATING ASSY.	1000kg	2206lbs

LOADING DATA:

DECANTER

1. MAX. STATIC LOAD

A- VERTICAL	24000N
B- HORISONTAL	0N

2. MAX. DYNAMIC LOAD AT RUN DOWN (ADD TO STATIC LOAD)

A- VERTICAL	± 8000N
B- HORIZONTAL	± 4000N

3. MAX. DYNAMIC LOAD AT OPERATING SPEED

A- VERTICAL	± 750N
B- HORISONTAL	± 750N

ALL LOADS ARE EVENLY DISTRIBUTED ON THE VIBRATION ISOLATORS

CONNECTIONS:

		DIMENSION / TYPE
A	FEED	ø51 (2") HOSE CONNECTION
B	SOLIDS OUTLET	RECTANGULAR FLANGE
*B	SOLIDS OUTLET FUNNEL	580 x 310
*C	LIQUID OUTLET	RECTANGULAR FLANGE
*C	HEAVY PHASE LIQUID OUTLET FUNNEL	ø154 (6") HOSE CONNECTION
D	POLYMER ADDITION	ISO 228-G 3/4" B CONNECTION
*E	POLYMER ADDITION	ISO 228-G 3/4" B CONNECTION
*F	CIP/DILUTING WATER	ø38 (1 1/2") WELDING FERRULE

NOTES

1- ALL CONNECTIONS MUST BE FLEXIBLE.

2- FOR PROPER VENTING OF DISCHARGE HOPPERS REFER TO THE INSTALLATION DRAWING. IMPROPER VENTING CAN LEAD TO LEAKAGE PROBLEMS.

3- CUSTOMER IS RESPONSIBLE FOR ANCHORING.

4- FOR FURTHER INFORMATION, SEE INSTALLATION DATA MANUAL AND INSTALLATION DRAWING.

* OPTIONAL EQUIPMENT

COMPLEMENTARY DRAWING 61248248

2.5kHz GEAR	DIMENSIONED DRAWING					Alfa Laval	
	ALDEC 45					Alfa Laval Copenhagen A/S 2800 DENMARK	
	Tolerances according to ISO 2768-mK	Surface roughness	Scale	Date	Drawn	61248247	
		3.2/	0.10	161287			
		0.4/	A4	1:5	300	M	

3/4/98

ALDEC

High-performance decanter for sludge thickening and dewatering

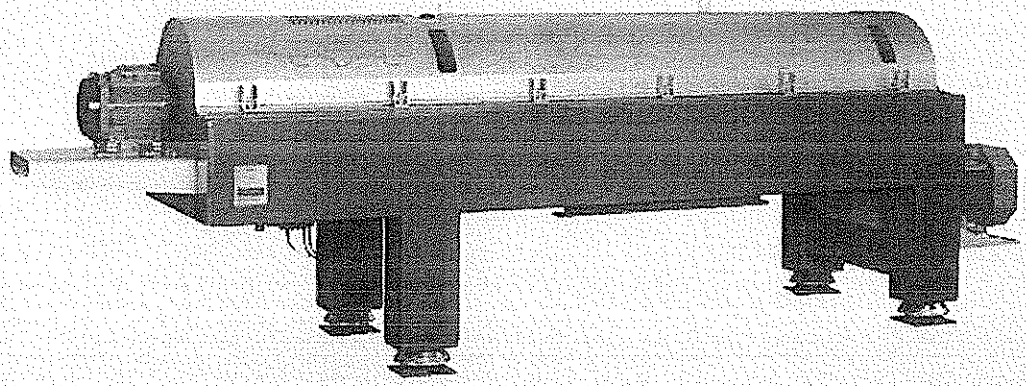

Applications

The Alfa Laval ALDEC range of decanter centrifuges are designed with a focus on cost-efficiency, reliability and easy operation. They are used for thickening and dewatering of sludge from municipal and industrial water and waste treatment plants.

ALDEC decanter centrifuges are capable of handling a wide range of flow rates. They are designed to be efficient, simple to install, easy to maintain and straightforward to operate. Installation, operating and service life costs are minimal.

Benefits

The ALDEC decanter centrifuge design provides a series of concrete benefits

- Reduces sludge volume, which cuts down on transport and disposal costs
- High capacity at small footprint: Compact, modular design saves space
- High performance combined with low energy consumption.

Features

- Critical parts made of wear-resistant material
- Fully open feed zone for improved separation
- 360° solids discharge to avoid blocking
- Baffle disc provides higher capacity and drier cake solids
- Steep or shallow cone configuration for optimum separation of any type of slurry
- Variety of conveyor design depending on type of slurry
- Variety of wear protection of conveyor flights for any demand
- Complete, fully enclosed cleaning-in-place (CIP)
- Floater disc for light particle removal (optional)

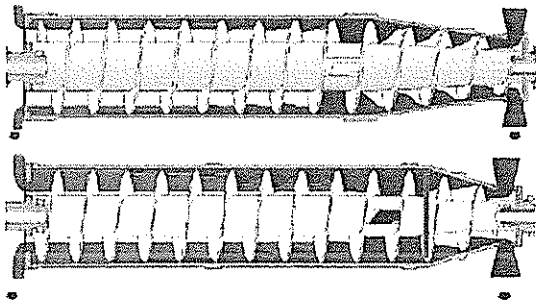

Shallow vs Steep cone configuration

Working principle

Separation takes place in a horizontal cylindrical bowl equipped with a screw conveyor (see drawing). The feed enters the bowl through a stationary inlet tube and is accelerated smoothly by an inlet distributor. The centrifugal force that results from the rotation then causes sedimentation of the solids on the wall of the bowl.

3/12/18
l

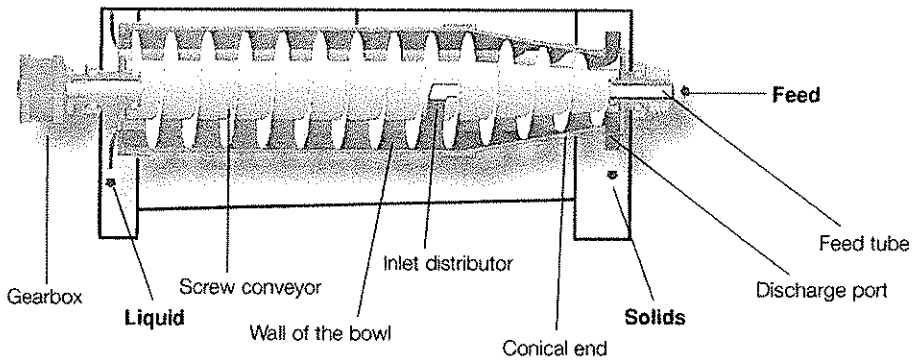

The conveyor rotates in the same direction as the bowl, but slightly slower, thus moving the solids towards the conical end of the bowl. The cake leaves the bowl through the solids discharge openings into the casing. Separation takes place throughout the entire length of the cylindrical part of the bowl, and the clarified liquid leaves the bowl by flowing over adjustable plate dams into the casing.

Process optimization
ALDEC decanter centrifuges can be adjusted to suit specific requirements by varying

- the bowl speed to obtain the G-force required for the most efficient separation
- the conveying speed for the most efficient balance between liquid clarity and solids dryness
- the pond depth in the bowl for the most efficient balance between liquid clarity and solids dryness

Design
The rotating part of ALDEC decanter centrifuges is mounted on a compact, in-line frame, with main bearings at both ends. Vibration dampers are placed under the frame. The rotating part is enclosed in a casing with a cover and a bottom section with integrated outlets for both solids and the liquid being removed.

Drive system
In all ALDEC decanter centrifuges, the bowl is driven by an electric motor and a V-belt transmission drive. Power is transferred to the conveyor via a planetary or Direct Drive gearbox. For smaller ALDEC decanters, countershaft transmission is an option.

Operation can either be pre-set to a suitable set of parameters, or the difference between the speeds of the bowl and the conveyor can be controlled automatically, with no need for changing belts or pulleys.

Materials
The bowl, conveyor, inlet tube, outlets, cover and other parts in direct contact with process media are all made of stainless steel. The discharge ports, conveyor flights and feed zone are

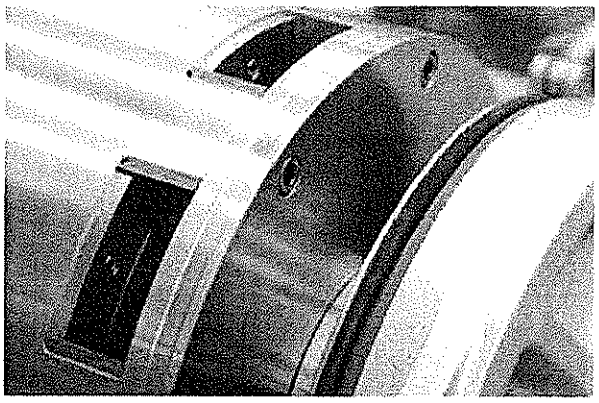

360° solids discharge, free from blocking

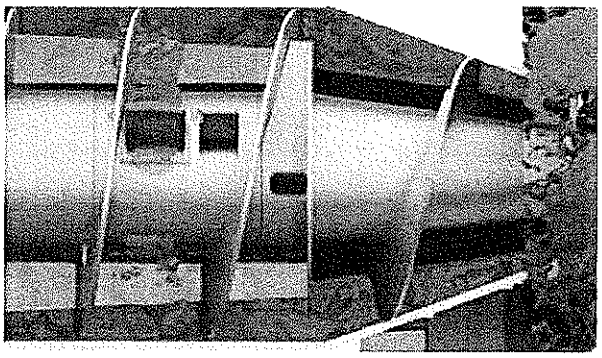

Baffle disc provides higher capacity and drier solids

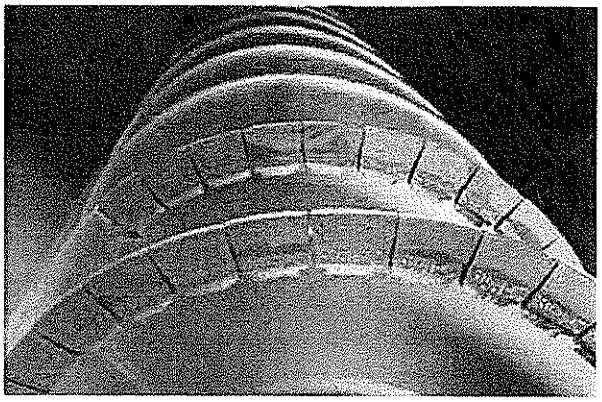

Sintered tungsten carbide tiles as wear protection for conveyor flights

3/12/18

Flame sprayed tungsten carbide wear protection on conveyor flights

protected with materials that are highly resistant to erosion. Various types of additional optional wear protection can be added: conveyor flights protection with flame sprayed hard surfacing, and/or sintered tungsten carbide tiles. The frame is made of mild steel with an epoxy enamel finish.

The Basic Core Controller

Each decanter centrifuge in the ALDEC range equipped with a variable frequency drive (VFD) as standard is delivered with the Basic Core Controller (BCC). This control package is capable of fully controlling the decanter operation, ensuring the most efficient performance and keeping costs for installation, commissioning, operation and maintenance to a minimum. The controller is also designed to measure the temperature of the bearings, and to monitor vibration levels.

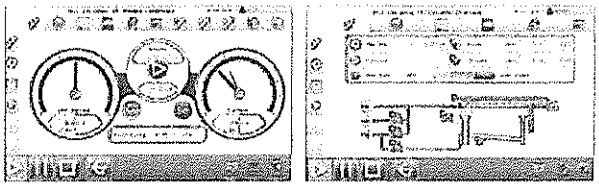

Technical specifications

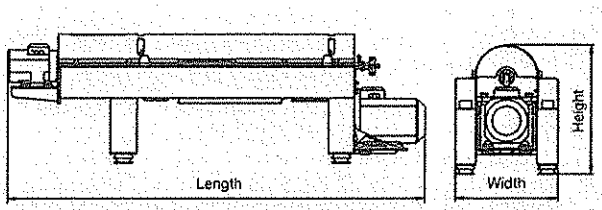

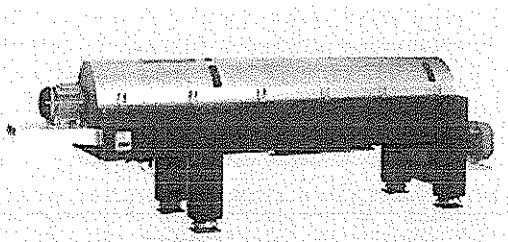

Designation	Length mm (inches)	Width mm (inches)	Height, max. mm (inches)	Max. weight kg (lbs)	Typical main drive size kW (HP)	Typical back drive* size kW (HP)	Start method
ALDEC 10	2,150 mm (85 inches)	580 mm (23 inches)	762 mm (30 inches)	375 kg (830 lbs)	4,0-11,0 kW (5-15 HP)	3 kW (4 HP)	Star-delta, VFD*
ALDEC 20	2,936 mm (116 inches)	780 mm (31 inches)	930 mm (37 inches)	1,125 kg (2,495 lbs)	11-18,5 kW (15-25 HP)	7.5 kW (10 HP)	Star-delta, VFD
ALDEC 30	3,216 mm (127 inches)	780 mm (31 inches)	930 mm (37 inches)	1,200 kg (2,660 lbs)	11-18,5 kW (15-25 HP)	7.5 kW (10 HP)	Star-delta, VFD
ALDEC 45	3,998 mm (168 inches)	990 mm (39 inches)	1,304 mm (51 inches)	2,300 kg (5,071 lbs)	11-22 kW (15-30 HP)	5.5 kW (7 HP)	Star-delta, VFD
ALDEC 75	4,959 mm (195 inches)	1,060 mm (42 inches)	1,376 mm (54 inches)	3,200 kg (7,050 lbs)	11-55 kW (50 HP)	5,5-11 kW (7,5-15 HP)	Star-delta, VFD
ALDEC 95	5,682 mm (224 inches)	1,150 mm (45 inches)	1,601 mm (63 inches)	4,500 kg (9,000 lbs)	18,5-90 kW (25-125 HP)	11-22 kW (15-30 HP)	VFD
ALDEC 105	5,842 mm (230 inches)	1,300 mm (51 inches)	1,696 mm (67 inches)	5,000 kg (1,1023 lbs)	30-132 kW (40-200 HP)	22 kW (30 HP)	VFD
ALDEC 115	6,502 mm (256 inches)	1,450 mm (57 inches)	1,791 mm (71 inches)	6,500 kg (14,300 lbs)	37-160 kW (50-200 HP)	15/30 kW (20/40 HP)	VFD
ALDEC 125	6,901 mm (264 inches)	1,510 mm (60 inches)	1,852 mm (73 inches)	8,600 kg (18,959 lbs)	55-250 kW (75-350 HP)	22/37 kW (30/50 HP)	VFD

* Variable frequency drive

Different materials of construction are available according to needs.

3/12/18

Lloyd's Register
LRQA

CERTIFICATE OF APPROVAL

This is to certify that the Management System of:

Alfa Laval (India) Limited
Operations Division
Mumbai - Pune Road, Dapodi,
Pune - 411 012,
INDIA

has been approved by Lloyd's Register Quality Assurance
to the following Management System Standard:

ISO 9001:2015

The Management System is applicable to:

- **The design management, manufacture of centrifugal disc stack separators, decanter centrifuges, centrifugal pumps, fittings, valves, plate type heat exchangers, welded heat exchangers, tubular heat exchangers and air heat exchangers including parts thereof.**
- **The manufacture of process modules comprising above equipment.**
- **The design and manufacture of process equipment, including food and pharma equipment.**

This certificate is valid only in association with the certificate schedule bearing the same number on which the locations applicable to this approval are listed.

Approval
Certificate No: MUM0060171

Original Approval: 23 December 1993

Current Certificate: 31 May 2017

Certificate Expiry: 31 May 2020

Issued by: Lloyd's Register Quality Assurance Limited

UKAS
MANAGEMENT
SYSTEMS
001

This certificate replaces and supersedes certificate no MUM0060171, issue dated 01 June 2014
LRQA Ltd, Unit 63 & 64, 6th Floor, Level 5, Kalpataru Square, Kondivita Lane, Off Andheri - Kurla Road, Andheri (East), Mumbai - 400 059, India
For and on behalf of LRQA Ltd, 1 Trinity Park, Bickenhill Lane, Birmingham, B37 7ES, United Kingdom.
This approval is carried out in accordance with the LRQA assessment and certification procedures and monitored by LRQA
The use of the UKAS Accreditation Mark indicates Accreditation in respect of those activities covered by the Accreditation Certificate Number 001
Page Revision 15

3/12/18

Lloyd's Register Group Limited, its affiliates and subsidiaries, including Lloyd's Register Quality Assurance Limited (LRQA), and their respective officers, employees or agents are, individually and collectively, referred to in this clause as 'Lloyd's Register'. Lloyd's Register assumes no responsibility and shall not be liable to any person for any loss, damage or expense caused by reliance on the information or advice in this document or howsoever provided, unless that person has signed a contract with the relevant Lloyd's Register entity for the provision of this information or advice and that case any responsibility or liability is exclusively on the terms and conditions set out in that contract.

Lloyd's Register
LRQA

CERTIFICATE SCHEDULE

Alfa Laval (India) Limited
Operations Division
Mumbai - Pune Road, Dapodi,
Pune - 411 012,
INDIA

Head Office:

Alfa Laval (India) Limited,
Operations Division,
Mumbai - Pune Road, Dapodi,
Pune - 411 012, India

Activities:

- **The design management, manufacture of centrifugal disc stack separators, decanter centrifuges and parts thereof.**
- **The manufacture of process modules comprising above equipment.**
- **The design and manufacture of process equipment, including food and pharma equipment.**

Other Locations:

Alfa Laval (India) Limited,
Heat Exchanger Factory,
E7/E8, MIDC Estate,
Satara - 415 004, India

Activities:

- **The design management, manufacture plate heat exchangers, welded heat exchangers and tubular heat exchangers and parts thereof.**

Approval
Certificate No: MUM0060171

Original Approval: 23 December 1993

Current Certificate: 31 May 2017

Certificate Expiry: 31 May 2020

UKAS MANAGEMENT SYSTEMS
001

LRQA Ltd, Unit 63 & 64, 6th Floor, Level 5, Kalpataru Square, Kondivita Lane, Off Andheri - Kurla Road, Andheri (East), Mumbai - 400 059, India
For and on behalf of LRQA Ltd, 1 Trinity Park, Bickenhill Lane, Birmingham, B37 7ES, United Kingdom.
This approval is carried out in accordance with the LRQA assessment and certification procedures and monitored by LRQA
The use of the UKAS Accreditation Mark indicates Accreditation in respect of those activities covered by the Accreditation Certificate Number 001
Mastr Revision 15

3/12/18

Lloyd's Register Group Limited, its affiliates and subsidiaries, including Lloyd's Register Quality Assurance Limited (LRQA), and their respective officers, employees or agents are, individually and collectively, referred to in this clause as 'Lloyd's Register'. Lloyd's Register assumes no responsibility and shall not be liable to any person for any loss, damage or expense caused by reliance on the information or advice in this document or howsoever provided, unless that person has signed a contract with the relevant Lloyd's Register entity for the provision of this information or advice and that case any responsibility or liability is exclusively on the terms and conditions set out in that contract

Lloyd's Register
LRQA

CERTIFICATE SCHEDULE

Alfa Laval (India) Limited
Operations Division
Mumbai - Pune Road, Dapodi,
Pune - 411 012,
INDIA

Other Locations:

Alfa Laval (India) Limited,
Flow Factory, Gat No. 30-33 & 74-82, Post:Sarole, Sarole–Veer Road, Tal:Bhor, Dist. Pune – 412 206, India

Alfa Laval (India) Limited,
Parts & Services,
Plot No. R 674, MIDC, Rabale,
TTC Industrial Area,
Navi Mumbai – 400 701, India

Activities:

- **The design management, manufacture air heat exchangers, valves, fittings and parts thereof.**

- **Procurement and Distribution of spare parts.**
- **Service of separators, decanter centrifuges, plate heat exchangers and pumps.**

Approval
Certificate No: MUM0060171

Original Approval: 23 December 1993

Current Certificate: 31 May 2017

Certificate Expiry: 31 May 2020

UKAS MANAGEMENT SYSTEMS
001

LRQA Ltd, Unit 63 & 64, 6th Floor, Level 5, Kalpataru Square, Kondivita Lane, Off Andheri - Kurla Road, Andheri (East), Mumbai - 400 059, India
For and on behalf of LRQA Ltd, 1 Trinity Park, Bickenhill Lane, Birmingham, B37 7ES, United Kingdom.
This approval is carried out in accordance with the LRQA assessment and certification procedures and monitored by LRQA
The use of the UKAS Accreditation Mark indicates Accreditation in respect of those activities covered by the Accreditation Certificate Number 001
Mark: Revision 15

Lloyd's Register Group Limited, its affiliates and subsidiaries, including Lloyd's Register Quality Assurance Limited (LRQA), and their respective officers, employees or agents are, individually and collectively, referred to in this clause as 'Lloyd's Register'. Lloyd's Register assumes no responsibility and shall not be liable to any person for any loss, damage or expense caused by reliance on the information or advice in this document or howsoever provided, unless that person has signed a contract with the relevant Lloyd's Register entity for the provision of this information or advice and that case any responsibility or liability is exclusively on the terms and conditions set out in that contract

3/12/18

BUREAU VERITAS
Certification

Alfa Laval Copenhagen A/S

Maskinvej 3-5, 2860 Søborg, Denmark

Bureau Veritas Certification Holding SAS – UK Branch certifies that the Management System of the above organization has been audited and found to be in accordance with the requirements of the Management System standards detailed below.

Standard

ISO 9001:2008

Scope of certification

Design and manufacturing of decanter centrifuges.
Design, manufacturing and marketing of fresh water generators.
Manufacturing of ballast water treatment systems on vessels.

Certification cycle start date: **1 November 2015**

Subject to the continued satisfactory operation of the organization's Management System, this certificate expires on: **15 September 2018**

Original certification date: **18 October 1991**

Certificate no.: DK005724 Version: **1** Revision date: **27 October 2015**

Signed on behalf of BVCH SAS UK Branch

UKAS MANAGEMENT SYSTEMS
008

Certification body address: *5th Floor, 66 Prescot Street, London, E1 8HG, United Kingdom*
Local Office: *Oldenborggade 1B, 7000 Fredericia, Denmark*

Further clarifications regarding the scope of this certificate and the applicability of the Management System requirements may be obtained by consulting the organization.
To check this certificate validity, please call **(+45) 77 311 000.**

3/12/18

KARKANIAS
ENVIRONMENTAL TECHNOLOGY S.A.

SCREW DEWATERER CONVEYOR

Manufacturer General Specifications

Technical data:

Screw length	:	As specified
Spiral diameter	:	300 mm
Spiral cross section	:	20 x 50 mm
Driving unit	:	BONFIGLIOLI RIDUTTORI
Type	:	II 2 G EExe II T3

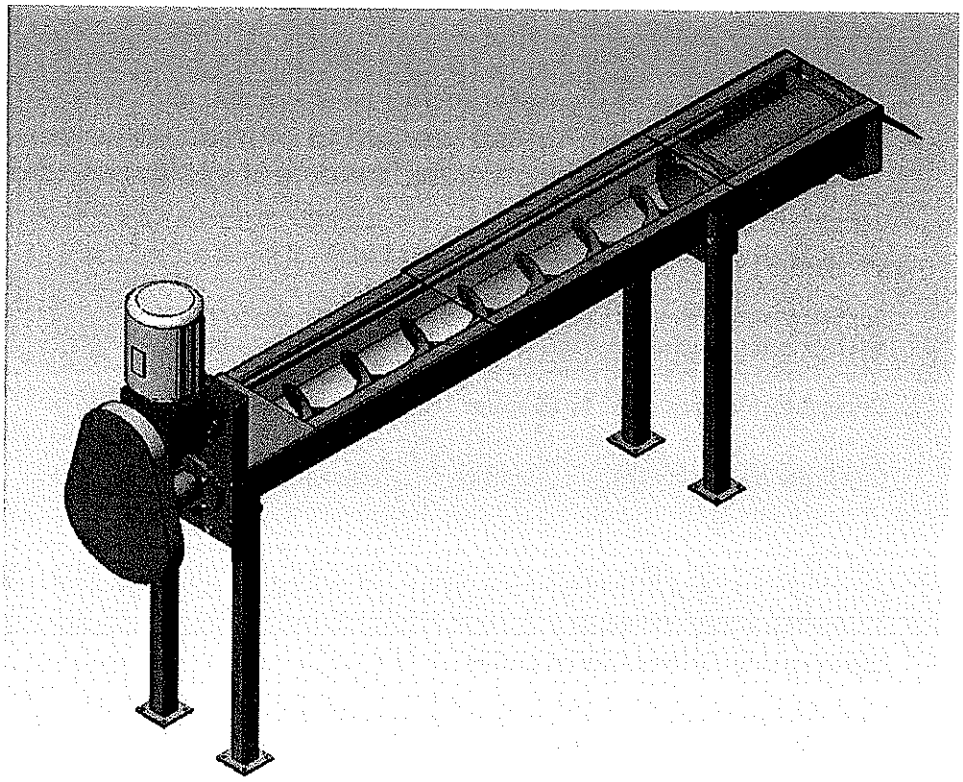

HEADQUARTERS:
Industrial Area of Larisa
Postal Code 41004, BOX 3053 Greece
www.karkanias.gr

Phone: +30 2410 541386
Fax: +30 2410 541354
Email: info@karkanias.gr

3112/18

KARKANIAS
ENVIRONMENTAL TECHNOLOGY S.A.

Design

The entire screw conveyor is made of stainless steel grade 304L. It consists of a shaftless spiral surrounded by a trough. Between the spiral and the trough is installed appropriate plastic material (Teflon) in order to eliminate friction. The spiral is protected by covers, attached on the trough by means of fastening screws so it can be easily cleaned and maintained. Suitable number of hoppers is installed in order to receive screenings from coarse screens.

The driving unit is connected at the one end of the screw conveyor through a drive shaft which is equipped with double sealing flange. At the other end the compacting chamber is assembled. Compaction is achieved by the mean of a barrier steel plate. Compression plate works as an obstacle during screenings transfer so they can be compressed and free of condensate before discharge to the skip. Drainage water is drained off into a collecting pipe, which will be driven to the drainage system of the plant.

The screw conveyor can be manufactured in alternative stainless steel grade upon costumer request.

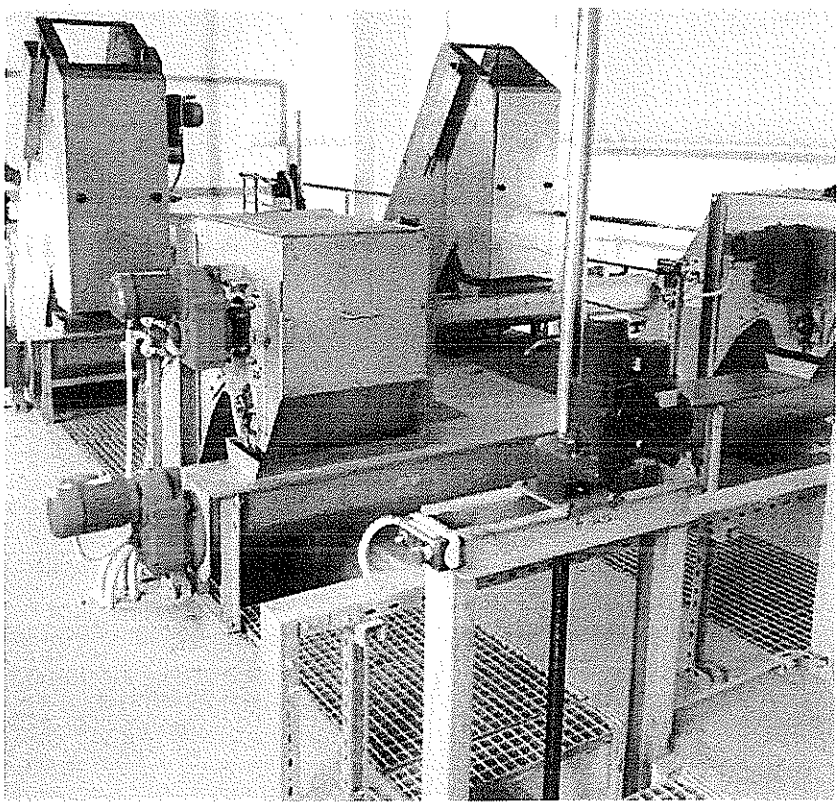

HEADQUARTERS:
Industrial Area of Larisa
Postal Code 41004, BOX 3053 Greece
www.karkanias.gr

Phone: +30 2410 541386
Fax: +30 2410 541354
Email: info@karkanias.gr

3/12/18

KARKANIAS
ENVIRONMENTAL TECHNOLOGY S.A.

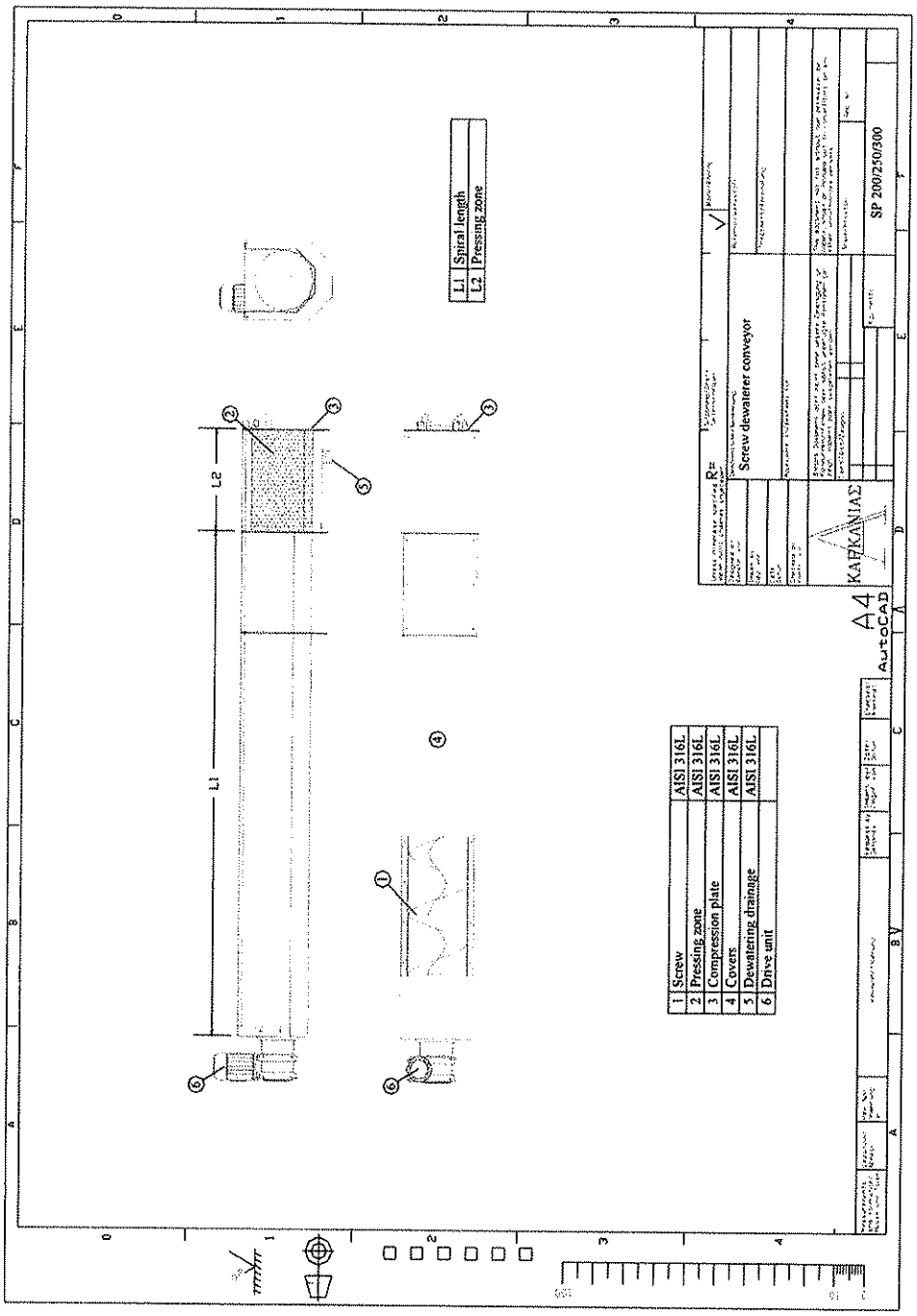

HEADQUARTERS:
Industrial Area of Larisa
Postal Code 41004, BOX 3053 Greece
www.karkanias.gr

Phone: +30 2410 541386
Fax: +30 2410 541354
Email: info@karkanias.gr

3/12/18

KARKANIAS
ENVIRONMENTAL TECHNOLOGY S.A.

Folder I - TENDER DOCUMENTS

Contents

		Document	Section in Folder
(a)		A Tender Form - Second Stage	1
(b)		Attach. 1. Price Schedules	2
	1	Schedule No. 1: Plant and Equipment (including mandatory spare parts) supplied from abroad	
	2	Schedule No. 2: Plant and Equipment (including mandatory spare parts) supplied from within the Employer's country	
	3	Schedule No. 3: Local Transportation	
	4	Schedule No. 4: Installation and Other Services	
	5	Schedule No. 5: Grand Summary (Schedules Nos. 1 to 4)	
	6	Schedule No. 6: Recommended Spare Parts	
(c)		Attach. 2. Power of Attorney	3
(d)		Attach. 3. Tender Security	4
(e)		Attach. 4. A copy of the Memorandum of the clarification meeting	5
(f)		Attach. 5. The updated Technical Tender and relevant declaration	6
(g)		Attach. 6. Qualification of Tenderer (FORM FIN - 4): Current Contract commitments	7
(h)		Attach. 7. Conformity of Facilities	8
(i)		Attach. 8. Subcontractors Proposed by the Tenderer	9
(j)		Attach. 9. Other documentation and information	10

KARKANIAS ENVIRONMENTAL TECHNOLOGY S.A.
INDUSTRIAL AREA OF LARISA - GREECE
POSTAL CODE 41004, BOX 3053
TEL.: +30 2410 541386 - FAX: +30 2410 541354
Email: info@karkanias.gr
TAX NUMBER: 095244711
REGISTRATION NUMBER: 48779/31/B/01/12

GEORGIOS KARKANIAS
PRESIDENT

03/12/18

03/12/18

VOLUME I.iv

TENDER FORM - TWO STAGE TENDER – SECOND STAGE TENDER

Date: 13/09/2018

Name of Contract: Danilovgrad Municipal Infrastructure - Construction of Wastewater Plant
To: D.O.O. "Vodovod i kanalizacija" Danilovgrad , Caja Scepanovica bb, 81410 Danilovgrad, State of Montenegro

Having examined the tender documents, including Addenda Nos. *(3),* and your requirements incorporated in the Memorandum of the clarification meeting held between us on (19/10/2017) , we, the undersigned, offer to design, manufacture, test, deliver, install, precommission and commission the Facilities under the above-named Contract in full conformity with the said tender documents and the said Memorandum for the sum of:

TWO MILLION THREE HUNDRED NINETY THOUSAND EUROS

(amount of foreign currency in words)

(2.390.000,00€)
(amount in figures)

and

xxxx

KARKANIAS
ENVIRONMENTAL TECHNOLOGY S.A

Until a formal Contract Agreement is prepared and executed between us, this tender, together with your written acceptance thereof and your notification of award, shall constitute a binding contract between us.

We understand that you are not bound to accept the lowest or any tender you may receive.

Dated this 13th day of September year 2018

GEORGIOS KARKANIAS
(signature)

In the capacity of

PRESIDENT
(position)

Duly authorised to sign this Tender for and on behalf of

KARKANIAS ENVIRONMENTAL TECHNOLOGY S.A
(name of tenderer)

KARKANIAS ENVIRONMENTAL TECHNOLOGY S.A.
INDUSTRIAL AREA OF LARISA - GREECE
POSTAL CODE 41004, BOX 3053
TEL.: +30 2410 541386 - FAX: +30 2410 541354
Email: info@karkanias.gr
TAX NUMBER: 095244711
REGISTRATION NUMBER: 48779/31/B/01/12

03/12/18

DIO I.iv

TENDERSKI OBRAZAC – DVOFAZNI TENDER – DRUGA FAZA TENDERA

Datum: 13/09/2018

Naziv ugovora: Opštinska infrastruktura Danilovgrada – Izgradnja uređaja za prečišćavanje otpadnih voda
Za: D.O.O. "Vodovod i kanalizacija" Danilovgrad , Caja Scepanovica bb, 81410 Danilovgrad, Crna Gora

Pregledavši tendersku dokumentaciju, koja uključujući priloge (3), kao i Vaše zahtjeve uključene u Memoranum sastanka koji je održan radi pojašnjenja nedoumica dana (19/10/2017), mi, u daljem tekstu potpisani, nudimo dizajniranje, izgradnju, testiranje, instalaciju, završne radnje i puštanje u pogon Postrojenja koje je predmet u prethodnom tekstu navedenog Ugovora u potpunosti u skladu sa tenderskom dokumentcijom i pomenutim Memorandumom u iznosu od:

DVA MILIJUNA TRISTO DEVEDESET HILJADA EURA
(iznos u stranoj valuti slovima)

(2.390.000,00€)
(brojčani iznos)

i
XXXX

Do pripreme formalnog Ugovora i njegovog potpisivanja, ova ponuda, uz Vaše pisano prihvatanje i obavještenje o dodjeli, predstavlja obavezujući ugovor između nas.

Razumijemo da nijeste u obavezi da prihvatite najnižu ili bilo koju ponudu koju dobijete.

Datum 13. septembar 2018. godine

GEORGIOS KARKANIAS
(potpis)

U svojstvu

PREDSJEDNIK
(pozicija)

Ovlašćen da potpiše ovaj Tender u ime

KARKANIAS ENVIRONMENTAL TECHNOLOGY S.A
(ime ponuđača)

03/12/18

Attachment 1 to Addendum-3 to the Tender Document for Procurement of: Construction of Wastewater Plant

VOLUME I.viii

PRICE SCHEDULES

PREAMBLE

General

1. The price schedules are divided into separate schedules according to Clause 22.2 of ITT.

2. The Schedules do not generally give a full description of the Plant and Equipment to be supplied and the services to be performed under each item. Tenderers shall be deemed to have read the Technical Specifications and other volumes of the tender documents and to have reviewed the Drawings to ascertain the full scope of the requirements included in each item prior to filling in the rates and prices. The entered rates and prices shall be deemed to include for the full scope as aforesaid, including overheads and profit.

3. If tenderers are unclear or uncertain as to the scope of any item, they shall seek clarification in accordance with the Instructions to Tenderers in the tender documents prior to submitting their tender.

4. The Price Schedules shall be read in conjunction with the several documents forming the Contract including General Conditions of Contract, Conditions of Particular Application, Schedules, Appendices, Drawings, Annexures and Addendums.

5. The rates and prices entered in the priced Price Schedules according to Clause 22.3 of ITT shall, unless expressly stated otherwise in the Contract, include for the comprehensive costs of carryingout
the work in accordance with the requirements of the Contract including without limitation for all Contractor's Equipment, labor, materials, setting-out, trials, obtaining approvals, erection, Temporary Works, work of rectification, supervision, maintenance, insurance, profit, taxes and duties, together with the costs of all risks, liabilities and obligations that are set out in or can reasonably be inferred from the Contract and including the rectification of any defects during the Defect Liability Period.

6. A rate of unit price shall be entered against each item in the Price Schedules, weather quantities are stated or not. The cost of items against which Contractor has failed to enter a rate or price shall be deemed to be covered by other rates and prices entered in the Price Schedules.

7. The whole cost of complying with the previsions of the Contract shall be included in the items provided in the priced Price Schedules and where no items are provided the cost shall be deemed to be distributed among the rates and prices entered for the related items of work. References to the relevant sections of the contract documentation shall be made before entering rates or prices against each item in the Price Schedules.

8. The completed work based on measurement shall be approved in accordance with the following requirements due to actual quantity supplied or work done. The Project Manager shall agree or determine the value of those parts of works, which are to be measured. Measurement shall be made of the net actual quantities of those works notwithstanding local practice.

03/12/18

Wherever any Permanent Works are to measured by records, they shall be prepared by the Contractor. The Contractor shall examine and agree the records with the Project Manager.
Whenever the Project Manager requires any part of the Works to be re-measured, reasonable notice shall be given to the Contractor, who shall:

(i) promptly either attend or send another qualified representative to assist the Project Manager in making measurement, and
(ii) supply any particulars requested by the Engineer.

If the Contractor fails to attend or send a representative, the re-measurement made by (or on behalf of) the Project Manager shall be accepted as accurate.

Pricing

9. Prices shall be entered in indelible ink, and any alterations necessary due to errors etc. shall be initialled by the tenderer.
As specified in the Tender Data, prices shall be fixed and firm for the duration of the Contract, or prices shall be subject to adjustment in accordance Contract Agreement.

10. Tender prices shall be quoted in the manner indicated and in the currencies specified in the Instructions to Tenderers in the tender documents.

For each item, tenderers shall complete each appropriate column in the respective Schedules, giving the price breakdown as indicated in the Schedules.

Prices given in the Schedules for each item shall be for the scope covered by that item as detailed in the Technical Specifications, Drawings or elsewhere in the tender documents.

11. Where there are discrepancies between the total of the amounts in the column for the price breakdown and the amount in the column for the total price, the former shall prevail and the latter will be corrected accordingly.

Where there are discrepancies between the total of the amounts of Schedules 1 to 4 and the amount given in Schedule 5 (Grand Summary), prices will be adjusted in accordance with Paragraph 34. of the Instructions to Tenderers.

Where there are discrepancies between amounts stated in figures and amounts stated in words, the amounts stated in words shall prevail.

12. Payments will be made to the Contractor in the currency or currencies indicated under each respective item.

13. Items left blank will be deemed to have been included in prices for other items. The total for each schedule and the total of the Grand Summary shall be deemed to be the total price for executing the Facilities and sections thereof in complete accordance with the Contract, whether or not each individual item has been priced.

14. When requested by the Employer for the purposes of making payments or part payments, calculating variations or evaluating claims, or for such other purposes as the Employer may reasonably require, the Contractor shall provide the Employer with a breakdown of any composite or lump sum items included in the Schedules.

03/12/18

Prilog 1 dodatku 3 tenderske dokumentacije za nabavku:
Izgradnja postrojenja za otpadne vode

POGLAVLJE I.viii

FINANSIJSKI DIO PONUDE

PREAMBULA

Opšte dispozicije

1. Finansijski dio ponude podijeljen je u zasebne tabele sa cijenama prema članu 22.2 poziva za učešće na tenderu.
2. U tabelama nije dat potpuni opis postrojenja i opreme koju treba isporučiti kao ni usluga koje treba izvršiti u okviru svake stavke. Smatraće se da su ponuđači pročitali tehničke specifikacije i druge djelove tenderske dokumentacije i da su pregledali projekat kako bi utvrdili u potpunosti zahtjeve u okviru svake stavke prije unošenja tarifa i cijena. Podrazumijevaće se da unesene tarife i cijene obuhvataju u potpunosti sve troškove, kao što je gore navedeno, uključujući režijske troškove i dobit.
3. Ako je ponuđačima nejasno koji opseg obuhvata svaka stavka, treba da potraže pojašnjenje prije podnošenja ponude u skladu sa Uputstvom ponuđača u tenderskoj dokumentaciji.
4. Finansijski dio ponude treba pročitati zajedno sa nekoliko dokumenata koji sačinjavaju ugovor, uključujući opšte uslove ugovora, posebne uslove, tabele, priloge, nacrte, anekse i dodatke.
5. Tarife i cijene unijete u finansijski dio ponude prema članu 22.3 poziva za učešće na tenderu, ukoliko nije drugačije naznačeno u ugovoru, treba da obuhvataju ukupne troškove izvršenja radova u skladu sa zahtjevima ugovora, uključujući bez ograničenja svu opremu izvođača radova, radnu snagu, materijal, projektovanje, testiranje, dobijanje saglasnosti, izgradnju, privremene radove, popravke, nadzor, održavanje, osiguranje, profit, poreze i obaveze, zajedno sa troškovima svih rizika, odgovornosti i obaveza koje su utvrđene ili mogu biti zaključene iz ugovora i uključujući ispravke bilo kakvih nedostataka tokom perioda odgovornosti za nedostatke.
6. Iznos jedinične cijene se unosi za svaku stavku u finansijskom dijelu ponude, bilo da su količine navedene ili ne. Troškovi stavki za koje izvođač nije unio tarifu ili cijenu smatraće se pokrivenim drugim tarifama i cijenama unesenim u finansijski dio ponude.
7. Ukupni troškovi usklađivanja sa odredbama ugovora treba da budu uključeni u stavke predviđene finansijskim dijelom ponude, a ukoliko one nisu navedene, trošak će se smatrati raspoređenim u okviru tarifa i cijena unesenih za slične stavke. Prije unosa tarifa ili cijena za svaku stavku u finansijskom dijelu ponude biće konsultovani odgovarajući odjeljci ugovorne dokumentacije.
8. Završeni radovi podložni mjerenju biće potvrđeni u skladu sa sljedećim zahtjevima zbog provjere isporučene količine ili obavljenog rada. Rukovodilac projekta će prihvatiti ili utvrditi vrijednost onih djelova radova koje treba izmjeriti. Potrebno je izmjeriti neto stvarnu količinu tih radova bez obzira na lokalnu praksu.
Ako su trajni radovi podložni mjerenju, evidenciju priprema izvođač. Izvođač radova ispituje i usklađuje evidenciju sa rukovodiocem projekta. Ukoliko rukovodilac projekta zahtijeva ponovno

03/12/18

mjerenje u bilo kom dijelu radova, potrebno je blagovremeno obavijestiti izvođača koji je dužan da:

(i) odmah dođe ili pošalje drugog kvalifikovanog predstavnika da asisitira rukovodiocu projekta u mjerenju, i
(ii) dostavi sve podatke koje zahtijeva inženjer.

Ukoliko izvođač radova nije prisutan ili ne pošalje svog predstavnika, ponovljeno mjerenje koje je izvršio rukovodilac projekta (ili je izvršilo drugo lice u njegovo ime) biće prihvaćeno kao validno.

Cijene

9. Cijene se unose neizbrisivim mastilom, a sve izmjene koje treba izvršiti zbog nastalih grešaka itd., moraju biti parafirane od strane ponuđača.
Kao što se navodi u tenderskim podacima, cijene će biti fiksne i nepromjenljive za vrijeme trajanja Ugovora, ili će biti regulisane u skladu sa Ugovornim sporazumom.

10. Cijene tendera će biti navedene na preciziran način u valutama navedenim u Uputstvu ponuđačima u okviru tenderske dokumentacije.
Za svaku stavku, ponuđači treba da popune odgovarujće kolone u tabelama, navodeći cijene kako je naznačeno u finansijskom dijelu ponude.
Cijene date u tabelama za svaku stavku pojedinačno treba da pokrivaju u potpunosti troškove navedenih stavki, kako je detaljno precizirano u tehničkim specifikacijama, crtežima ili na drugim mjestima u tenderskoj dokumentaciji.

11. Ako postoje razlike između zbira cijena po stavkama i iznosa u koloni za ukupnu cijenu, prvi će prevladati, a drugi će biti ispravljen u skladu sa njim.

Ako postoje razlike između ukupnih iznosa Tabela od 1 do 4 i iznosa datog u Tabeli 5 (Konačan zbir), cijene će biti prilagođene u skladu sa odjeljkom 34 Uputstva za ponuđače.
Tamo gdje postoje odstupanja između iznosa navedenih ciframa i iznosa navedenih riječima, iznosi navedeni riječima su validni.

12. Plaćanja će biti izvršena izvođaču u valuti ili valutama navedenim u okviru svake odgovarajuće stavke.

13. Stavke koje su nepopunjene smatraće se uračunatim u cijene ostalih stavki. Ukupan iznos za svaku tabelu i konačan zbir smatraće se ukupnom cijenom za izgradnju postrojenja i njihovih djelova u potpunoj saglasnosti sa Ugovorom, bez obzira na to da li je svaka stavka određena cijenom ili ne.

14. Na zahtjev poslodavca u svrhu izvršavanja uplate ili djelimičnih uplata, izračunavanja varijacija ili procjene potraživanja, ili u druge svrhe koje poslodavac može opravdano zahtijevati, izvođač treba da dostavi poslodavcu listu paušalnih cijena za stavke obuhvaćene finansijskim dijelom ponude.

03/12/18

IFT Number 8732-IFT-41252
IFT Broj 8732 - IFT - 41252

Schedule No. 1
Tabela broj 1
PAGE 1 OF 6
STRANA 1 OD 6

SCHEDULE OF RATES AND PRICES
PRIKAZ TARIFA I CIJENA

SCHEDULE NO.1 - PLANT AND EQUIPMENT, INCLUDING MANDATORY SPARE PARTS SUPPLIED FROM ABROAD
TABELA BR. 1 - POSTROJENJE I OPREMA, UKLJUČUJUĆI OBAVEZNE REZERVNE DJELOVE DOBAVLJENE IZ INOSTRANSTVA

Name of tenderer **KARKANIAS - Environmental Technology SA**
Ime ponuđača

Page __of ___
Strana __ od ___

Tender identification no. EBRD ME DAN 9000
Tenderski identifikacioni broj: EBRD ME DAN 9000

Important note: Items detail specifications and description refer to Volume III - The Requirements, document III.i Technical Specifications.
Vazna napomena: Detaljna specifikacija stavki i opis odnose se na poglavlje III - Zahtjevi, dokument III.i Tehničke specifikacije

Item Stavka	Description Opis	Quantity Količina	Unit price CIP (border) Jedinična cijena (CIP-Prevoz i osiguranje plaćeni do (granica)	Unit price (other INCOTERMS) Jedinična cijena (druga INCOTERMS pravila)	Total price per item (1x2) or (1x3) Ukupna cijena po stavki (1x2) ili (1x3)
		1	2	3	4
1	**Mechanical Part Mehanički dio**				
1.1	Mechanical Treatment Mehanički tretman	1,0 set	65.000,00		65.000,00
1.2	Biological Treatment Biološki tretman	1,0 set	69.000,00		69.000,00
1.3	Sludge Treatment Tretman mulja	1,0 set	45.000,00		45.000,00
1.4	Sludge Dewatering Dehidratacija mulja	1,0 set	82.000,00		82.000,00
	Subtotal of Mechanical Part Podiznos za mehanički dio				**261.000,00**
2	**Electrical Part Električni dio**				
2.1	Electrical Part Električni dio	1,0 set	35.000,00		35.000,00
2.2	Main supply distribution Glavno napajanje	1,0 set	40.000,00		40.000,00
2.3	Heavy current distribution Distribucija teške struje	1,0 set	25.000,00		25.000,00
2.4	Instrumentation and Control (I&C) Instrumenti i kontrola	1,0 set	70.000,00		70.000,00
2.5	Automatic control of technological processes Automatska kontrola tehnoloških procesa	1,0 set	70.000,00		70.000,00

03/12/18

SCHEDULE NO.1 - PLANT AND EQUIPMENT, INCLUDING MANDATORY SPARE PARTS SUPPLIED FROM ABROAD
TABELA BR. 1 - POSTROJENJE I OPREMA, UKLJUČUJUĆI OBAVEZNE REZERVNE DJELOVE DOBAVLJENE IZ INOSTRANSTVA

Name of tenderer **KARKANIAS - Environmental Technology SA**
Ime ponuđača

Page __of ___
Strana __ od ___

Tender identification no. EBRD ME DAN 9000
Tenderski identifikacioni broj: EBRD ME DAN 9000

Important note: Items detail specifications and description refer to Volume III - The Requirements, document III.i Technical Specifications.
Vazna napomena: Detaljna specifikacija stavki i opis odnose se na poglavlje III - Zahtjevi, dokument III.i Tehničke specifikacije

Item Stavka	Description Opis	Quantity Količina	Unit price CIP (border) Jedinična cijena (CIP-Prevoz i osiguranje plaćeni do (granica)	Unit price (other INCOTERMS) Jedinična cijena (druga INCOTERMS pravila)	Total price per item (1x2) or (1x3) Ukupna cijena po stavki (1x2) ili (1x3)
		1	2	3	4
	Subtotal of Electrical Part **Podiznos za električni dio**				**240.000,00**
				Total amount **Ukupan iznos**	**501.000,00**

Signature of tenderer GEORGIOS KARKANIAS PRESIDENT
Potpis ponuđača

KARKANIAS ENVIRONMENTAL TECHNOLOGY S.A.
INDUSTRIAL AREA OF LARISA - GREECE
POSTAL CODE 41004, BOX 3053
TEL.: +30 2410 541386 - FAX: +30 2410 541354
Email: info@karkanias.gr
TAX NUMBER: 095244711
REGISTRATION NUMBER: 48779/31/B/01/12

Note:
Napomena:

1. In case of discrepancy between unit price and total, prices will be adjusted in accordance with Paragraph 33.3 of the Instructions to Tenderers.
U slučaju neslaganja između jediničnih cijena i ukupne, cijene će biti usklađene sa poglavljem 33.3 instrukcija za ponuđače.

2. Prices and currencies to be in accordance with Paragraphs 23 and 24 respectively of the Instructions to Tenderers.
Cijene i valute moraju biti u skladu sa poglavljima 23 i 24 instrukcija za ponuđače.

3. Currencies are to be clearly specified in accordance with the Instructions to Tenderers.
Valute se moraju jasno precizirati u skladu sa instrukcijama za ponuđače.

03/12/18

IFT Number 8732-IFT-41252
IFT Broj 8732 - IFT - 41252

Schedule No. 2
Tabela broj 2
PAGE 2 OF 6
STRANA 2 OD 6

SCHEDULE OF RATES AND PRICES
PRIKAZ TARIFA I CIJENA

SCHEDULE No.2 - PLANT AND EQUIPMENT SUPPLIED FROM WITHIN THE EMPLOYER'S COUNTRY
TABELA BR. 2 - POSTROJENJE I OPREMA DOBAVLJENA IZ ZEMLJE POSLODAVCA

Name of tenderer **KARKANIAS - Environmental Technology SA**
Ime ponuđača

Page __of___
Strana ___ od ___

Tender identification no. EBRD ME DAN 9000
Tenderski identifikacioni broj: EBRD ME DAN 9000

Important note: Items detail specifications and description refer to Volume III - The Requirements, document III.i Technical Specifications.
Vazna napomena: Detaljna specifikacija stavki i opis odnose se na poglavlje III - Zahtjevi, dokument III.i Tehničke specifikacije

Item Stavka	Description Opis	Quantity Količina	Unit price EXW Jedinična cijena EXW - franko fabrika		Import duties and taxes on directly imported components Uvozne obaveze i takse na direktno uvezene komponente	Total price Ukupna cijena per item po stavki (1x2)	
			Foreign Strana *	Local Domaća *		Foreign Strana * 1x2+4	Local Domaća * 1x3+4
		1	2	3	4	5	6
1	**Mechanical Part Mehanički dio**						
1.1	Mechanical Treatment Mehanički tretman	1,0 set	4.000,00			4.000,00	
1.2	Biological Treatment Biološki tretman	1,0 set	4.500,00			4.500,00	
1.3	Sludge Treatment Tretman mulja	1,0 set	4.500,00			4.500,00	
1.4	Sludge Dewatering Dehidratacija mulja	1,0 set	5.000,00			5.000,00	
	Subtotal of Mechanical Part Podiznos za mehanički dio					**18.000,00**	
2	**Electrical Part Električni dio**						
2.1	Transformer station Trafostanica	1,0 set	3.000,00			3.000,00	
2.2	Main supply distribution Glavno napajanje	1,0 set	3.000,00			3.000,00	
2.3	Heavy current distribution Distribucija teške struje	1,0 set	4.000,00			4.000,00	
2.4	Instrumentation and Control (I&C) Instrumenti i kontrola	1,0 set	2.000,00			2.000,00	
2.5	Automatic control of technological processes Automatska kontrola tehnoloških procesa	1,0 set	2.000,00			2.000,00	
	Subtotal of Electrical Part Podiznos za električni dio					**14.000,00**	

03/12/18

IFT Number 8732-IFT-41252
IFT Broj 8732 - IFT - 41252

Schedule No. 2
Tabela broj 2
PAGE 2 OF 6
STRANA 2 OD 6

SCHEDULE OF RATES AND PRICES
PRIKAZ TARIFA I CIJENA

SCHEDULE No.2 - PLANT AND EQUIPMENT SUPPLIED FROM WITHIN THE EMPLOYER'S COUNTRY
TABELA BR. 2 - POSTROJENJE I OPREMA DOBAVLJENA IZ ZEMLJE POSLODAVCA

Name of tenderer **KARKANIAS - Environmental Technology SA**
Ime ponuđača

Page __of____
Strana ____ od ____

Tender identification no. EBRD ME DAN 9000
Tenderski identifikacioni broj: EBRD ME DAN 9000

Important note: Items detail specifications and description refer to Volume III - The Requirements, document III.i Technical Specifications.
Vazna napomena: Detaljna specifikacija stavki i opis odnose se na poglavlje III - Zahtjevi, dokument III.i Tehničke specifikacije

Item Stavka	Description Opis	Quantity Količina	Unit price EXW Jedinična cijena EXW - franko fabrika		Import duties and taxes on directly imported components Uvozne obaveze i takse na direktno uvezene komponente	Total price Ukupna cijena per item po stavki (1x2)	
			Foreign Strana *	Local Domaća *		Foreign Strana * 1x2+4	Local Domaća * 1x3+4
					Total amount Ukupan iznos	32.000,00	

Signature of tenderer GEORGIOS KARKANIAS
Potpis ponuđača PRESIDENT

KARKANIAS ENVIRONMENTAL TECHNOLOGY S.A.
INDUSTRIAL AREA OF LARISA - GREECE
POSTAL CODE 41004, BOX 3053
TEL.: +30 2410 541386 - FAX: +30 2410 541354
Email: info@karkanias.gr
TAX NUMBER: 095244711
REGISTRATION NUMBER: 48779/31/B/01/12

Note:
Napomena:

1. In case of discrepancy between unit price and total, prices will be adjusted in accordance with Paragraph 33.3 of the Instructions to Tenderers.
U slučaju neslaganja između jediničnih cijena i ukupne, cijene će biti usklađene sa poglavljem 33.3 instrukcija za ponuđače.
2. Prices and currencies to be in accordance with Paragraphs 23 and 24 respectively of the Instructions to Tenderers. Cijene i valute moraju biti u skladu sa poglavljima 23 i 24 instrukcija za ponuđače.
3. Currencies are to be clearly specified in accordance with the Instructions to Tenderers.
Valute se moraju jasno precizirati u skladu sa instrukcijama za ponuđače.

03/12/18

IFT Number 8732-IFT-41252
IFT Broj 8732 - IFT - 41252

Schedule No. 3
Tabela broj 3
PAGE 3 OF 6
STRANA 3 OD 6

SCHEDULE OF RATES AND PRICES
PRIKAZ TARIFA I CIJENA

SCHEDULE No.3 - LOCAL TRANSPORTATION
TABELA BR. 3 - LOKALNI PREVOZ

Name of tenderer **KARKANIAS - Environmental Technology SA**
Ime ponuđača

Page __ of ___
Strana ___ od ____

Tender identification no. EBRD ME DAN 9000
Tenderski identifikacioni broj: EBRD ME DAN 9000

Important note: Items detail specifications and description refer to Volume III - The Requirements, document III.i Technical Specifications.
Vazna napomena: Detaljna specifikacija stavki i opis odnose se na poglavlje III - Zahtjevi, dokument III.i Tehničke specifikacije

Item Stavka	Description Opis	Quantity Količina	Unit price* Jedinična vrijednost*	Total price Ukupna cijena (1x2)
		1	2	3
1	**Mechanical Part Mehanički dio**			
1.1	Mechanical Treatment Mehanički tretman	1,0 set	4.000,00	4.000,00
1.2	Biological Treatment Biološki tretman	1,0 set	5.000,00	5.000,00
1,3	Sludge Treatment Tretman mulja	1,0 set	4.000,00	4.000,00
1.4	Sludge Dewatering Dehidratacija mulja	1,0 set	5.000,00	5.000,00
	Subtotal of Mechanical Part Podiznos za mehanički dio			**18.000,00**
2	**Electrical Part Električni dio**			
2.1	Transformer station Trafostanica	1,0 set	2.000,00	2.000,00
2.2	Main supply distribution Glavno napajanje	1,0 set	3.000,00	3.000,00
2.3	Heavy current distribution Distribucija teške struje	1,0 set	2.000,00	2.000,00
2.4	Instrumentation and Control (I&C) Instrumenti i kontrola	1,0 set	2.000,00	2.000,00

03/12/18

IFT Number 8732-IFT-41252
IFT Broj 8732 - IFT - 41252

Schedule No. 3
Tabela broj 3
PAGE 3 OF 6
STRANA 3 OD 6

SCHEDULE OF RATES AND PRICES
PRIKAZ TARIFA I CIJENA

SCHEDULE No.3 - LOCAL TRANSPORTATION
TABELA BR. 3 - LOKALNI PREVOZ

Name of tenderer **KARKANIAS - Environmental Technology SA**
Ime ponuđača

Page __of ___
Strana ___ od ___

Tender identification no. EBRD ME DAN 9000
Tenderski identifikacioni broj: EBRD ME DAN 9000

Important note: Items detail specifications and description refer to Volume III - The Requirements, document III.i Technical Specifications.
Vazna napomena: Detaljna specifikacija stavki i opis odnose se na poglavlje III - Zahtjevi, dokument III.i Tehničke specifikacije

Item Stavka	Description Opis	Quantity Količina	Unit price* Jedinična vrijednost*	Total price Ukupna cijena (1x2)
2.5	Automatic control of technological processes Automatska kontrola tehnoloških procesa	1,0 set	2.000,00	2.000,00
	Subtotal of Electrical Part Podiznos za električni dio			**11.000,00**
TOTAL (TO GRAND SUMMARY) UKUPNO (ZA KONAČAN ZBIR)				**29.000,00**

Signature of tenderer
Potpis ponuđača

GEORGIOS KARKANIAS
PRESIDENT

KARKANIAS ENVIRONMENTAL TECHNOLOGY S.A.
INDUSTRIAL AREA OF LARISA - GREECE
POSTAL CODE 41004, BOX 3053
TEL.: +30 2410 541386 - FAX: +30 2410 541354
Email: info@karkanias.gr
TAX NUMBER: 095244711
REGISTRATION NUMBER: 48779/31/B/01/12

*Specify currencies in accordance with the Instructions to Tenderers.
*Precizirati valute u skladu sa instrukcijama za ponuđače.

03/12/18

IFT Number 8732-IFT-41252
IFT Broj 8732 - IFT - 41252

Schedule No. 4
Tabela broj 4
PAGE 4 OF 6
STRANA 4 OD 6

SCHEDULE OF RATES AND PRICES
PRIKAZ TARIFA I CIJENA

SCHEDULE No.4 - INSTALLATION AND OTHER SERVICES
TABELA BR. 4 - UGRADNJA I DRUGE USLUGE

Name of tenderer **KARKANIAS - Environmental Technology SA**
Ime ponuđača

Page __of___
Strana ___ od ___

Tender identification no. EBRD ME DAN 9000
Tenderski identifikacioni broj: EBRD ME DAN 9000

Important note: Items detail specifications and description refer to Volume III - The Requirements, document III.i Technical Specifications.
Vazna napomena: Detaljna specifikacija stavki i opis odnose se na poglavlje III - Zahtjevi, dokument III.i Tehničke specifikacije

				Unit price Jedinična cijena		Total price Ukupna cijena	Total price Ukupna cijena
Item Stavka	Description Opis	Quantity Količina		Foreign Strana Currency Valuta Portion* Udio*	Local Domaća Currency Valuta Portion* Udio*	Foreign* Strana* 1x2	Local* Domaća* 1x3
		1		2	3	4	5
1	**Mechanical Part** **Mehanički dio**						
1.1	Mechanical Treatment Mehanički tretman	1,0	set	17.000,00		17.000,00	
1.2	Biological Treatment Biološki tretman	1,0	set	15.000,00		15.000,00	
1.3	Sludge Treatment Tretman mulja	1,0	set	8.000,00		8.000,00	
1.4	Sludge Dewatering Dehidratacija mulja	1,0	set	16.000,00		16.000,00	
	Subtotal of Mechanical Part **Podiznos za mehanički dio**					**56.000,00**	
2	**Electrical Part** **Električni dio**						
2.1	Transformer station Trafostanica	1,0	set	4.000,00		4.000,00	
2.2	Main supply distribution Glavno napajanje	1,0	set	9.000,00		9.000,00	
2.3	Heavy current distribution Distribucija teške struje	1,0	set	11.000,00		11.000,00	
2.4	Instrumentation and Control (I&C) Instrumenti i kontrola	1,0	set	8.000,00		8.000,00	
2.5	Automatic control of technological processes Automatska kontrola tehnoloških procesa	1,0	set	22.000,00		22.000,00	
	Subtotal of Electrical Part **Podiznos za električni dio**					**54.000,00**	
3	**Civil Part** **Gradevinski dio**						
3.1	Overflow/closing chamber Prelivna/završna šahta	1,0	set	50.000,00		50.000,00	
3.2	Gravel trap, Coarse screens, Sewage collection tank Šljunkolov, grubo sito, kolektor za kanalizaciju	1,0	set	20.000,00		20.000,00	
3.3	Pumping station with overflow Pumpna stanica sa prelivanjem	1,0	set	70.000,00		70.000,00	
3.4	Fine mechanical pre-treatment Fini mehanički predtretman	1,0	set	5.000,00		5.000,00	

03/12/18

IFT Number 8732-IFT-41252
IFT Broj 8732 - IFT - 41252

Schedule No. 4
Tabela broj 4
PAGE 4 OF 6
STRANA 4 OD 6

SCHEDULE OF RATES AND PRICES
PRIKAZ TARIFA I CIJENA

SCHEDULE No.4 - INSTALLATION AND OTHER SERVICES
TABELA BR. 4 - UGRADNJA I DRUGE USLUGE

Name of tenderer **KARKANIAS - Environmental Technology SA**
Ime ponuđača

Page __of ___
Strana ___ od ___

Tender identification no. EBRD ME DAN 9000
Tenderski identifikacioni broj: EBRD ME DAN 9000

Important note: Items detail specifications and description refer to Volume III - The Requirements, document III.i Technical Specifications.
Vazna napomena: Detaljna specifikacija stavki i opis odnose se na poglavlje III - Zahtjevi, dokument III.i Tehničke specifikacije

				Unit price Jedinična cijena		Total price Ukupna cijena	Total price Ukupna cijena
Item Stavka	**Description Opis**	**Quantity Količina**		**Foreign Strana Currency Valuta Portion* Udio***	**Local Domaća Currency Valuta Portion* Udio***	**Foreign* Strana* 1x2**	**Local* Domaća* 1x3**
		1		2	3	4	5
3.5	Flow distribution structures Strukture za distribuciju protoka	1,0	set	40.000,00		40.000,00	
3.6	Predenitricication tank Bazen za pre-denitrifikaciju	1,0	set	35.000,00		35.000,00	
3.7	Circulating activated sludge tank Cirkulacioni bazen za aktivni mulj	1,0	set	120.000,00		120.000,00	
3.8	Final settling tank Bazen za finalno taloženje	1,0	set	60.000,00		60.000,00	
3.9	UV outflow desinfection structure Uređaj za UV dezinfekciju	1,0	set	50.000,00		50.000,00	
3.10	Measuring flumes Mjerenje kanala	1,0	set	10.000,00		10.000,00	
3.11	Return and excess activated sludge pumping station Pumpna stanica za povratni aktivni mulj i višak mulja	1,0	set	50.000,00		50.000,00	
3.12	Dosing of phosphorus precipitant Doziranje fosforne precipitacije	1,0	set	20.000,00		20.000,00	
3.13	Blower house Objekat za produvavanje	1,0	set	20.000,00		20.000,00	
3.14	Operation building Upravna zgrada	1,0	set	70.000,00		70.000,00	
3.15	Garage Garaža	1,0	set	50.000,00		50.000,00	
3.16	Warehouse Skladište	1,0	set	30.000,00		30.000,00	
3.17	Aerobic stabilization tank Bazen za aerobnu stabilizaciju	1,0	set	20.000,00		20.000,00	
3.18	Aerobic stabilised sludge mixed holding tank Bazen za aerobnu stabilizaciju mulja	1,0	set	10.000,00		10.000,00	
3.19	Building of aerobic sludge stabilization,mechanical sludge dewatering and thickening Konstrukcija za aerobnu stabilizaciju mulja, mehaničku dehidrataciju mulja i ugušćivanje	1,0	set	70.000,00		70.000,00	
3.20	Dewatered sludge storage site Odlagalište za dehidrirani mulj	1,0	set	70.000,00		70.000,00	
3.21	Construction wiring Građevinske instalacije	1,0	set	5.000,00		5.000,00	

03/12/18

IFT Number 8732-IFT-41252
IFT Broj 8732 - IFT - 41252

Schedule No. 4
Tabela broj 4
PAGE 4 OF 6
STRANA 4 OD 6

SCHEDULE OF RATES AND PRICES
PRIKAZ TARIFA I CIJENA

SCHEDULE No.4 - INSTALLATION AND OTHER SERVICES
TABELA BR. 4 - UGRADNJA I DRUGE USLUGE

Name of tenderer **KARKANIAS - Environmental Technology SA**
Ime ponuđača

Page __of ___
Strana ___ od ___

Tender identification no. EBRD ME DAN 9000
Tenderski identifikacioni broj: EBRD ME DAN 9000

Important note: Items detail specifications and description refer to Volume III - The Requirements, document III.i Technical Specifications.
Vazna napomena: Detaljna specifikacija stavki i opis odnose se na poglavlje III - Zahtjevi, dokument III.i Tehničke specifikacije

			Unit price Jedinična cijena		Total price Ukupna cijena	Total price Ukupna cijena
Item Stavka	**Description Opis**	**Quantity Količina**	**Foreign Strana Currency Valuta Portion* Udio***	**Local Domaća Currency Valuta Portion* Udio***	**Foreign* Strana* 1x2**	**Local* Domaća* 1x3**
		1	2	3	4	5
3.22	Heating Grijanje	1,0 set	5.000,00		5.000,00	
3.23	Sanitary system Sanitarni sistem	1,0 set	5.000,00		5.000,00	
3.24	Air-conditioning system Rashladni sistem	1,0 set	5.000,00		5.000,00	
3,25	Water supply Vodosnabdijevanje	1,0 set	10.000,00		10.000,00	
3.26	Transformer station Trafostanica	1,0 set	30.000,00		30.000,00	
3.27	Connecting piping and flumes Povezivanje cjevovoda i kanala	1,0 set	10.000,00		10.000,00	
3.28	Sludge piping Cjevovod mulja	1,0 set	15.000,00		15.000,00	
3,29	Air piping Vazdušne cijevi	1,0 set	10.000,00		10.000,00	
3.30	Sewage system Kanalizacioni sistem	1,0 set	20.000,00		20.000,00	
3.31	Cable lines Kablovske linije	1,0 set	10.000,00		10.000,00	
3,32	Exterior lighting Vanjsko osvjetljenje	1,0 set	10.000,00		10.000,00	
3.33	Communications and hard-surface areas Komunikacija i tvrde površine	1,0 set	50.000,00		50.000,00	
3.34	Landscaping Pejzaž	1,0 set	10.000,00		10.000,00	
3.35	Fencing Ograda	1,0 set	30.000,00		30.000,00	
3.36	Other necessary objects Ostali potrebni predmeti	1,0 set	5.000,00		5.000,00	
	Subtotal of Civil Part Podiznos za građevinski dio				**1.100.000,00**	

03/12/18

IFT Number 8732-IFT-41252
IFT Broj 8732 - IFT - 41252

Schedule No. 4
Tabela broj 4
PAGE 4 OF 6
STRANA 4 OD 6

SCHEDULE OF RATES AND PRICES
PRIKAZ TARIFA I CIJENA

SCHEDULE No.4 - INSTALLATION AND OTHER SERVICES
TABELA BR. 4 - UGRADNJA I DRUGE USLUGE

Name of tenderer **KARKANIAS - Environmental Technology SA**
Ime ponuđača

Page __of ___
Strana ___ od ___

Tender identification no. EBRD ME DAN 9000
Tenderski identifikacioni broj: EBRD ME DAN 9000

Important note: Items detail specifications and description refer to Volume III - The Requirements, document III.i Technical Specifications.
Vazna napomena: Detaljna specifikacija stavki i opis odnose se na poglavlje III - Zahtjevi, dokument III.i Tehničke specifikacije

				Unit price Jedinična cijena		Total price Ukupna cijena	Total price Ukupna cijena
Item Stavka	**Description Opis**	**Quantity Količina**		**Foreign Strana Currency Valuta Portion* Udio***	**Local Domaća Currency Valuta Portion* Udio***	**Foreign* Strana* 1x2**	**Local* Domaća* 1x3**
		1		2	3	4	5
8	Geodetic measurements Geodetska mjerenja	1,0	set	32.000,00		32.000,00	
9	Engineering-geological and Hydro-geological surveys Inženjersko-geološka i hidrogeološka istraživanja	1,0	set	73.000,00		73.000,00	
10	Main design for building permit (for the entire project scope) Glavni dizajn za dozvolu za izgradnju (za cijeli opseg projekta)	1,0	set	140.000,00		140.000,00	
11	Main design for the details for execution of works (Detail design - for the entire project scope) Glavni dizajn za detalje izvršenja radova (detaljni dizajn za cijeli opseg projekta)	1,0	set	100.000,00		100.000,00	
12	As-built drawings and documents Projekat i dokumentacija izvedenog stanja	1,0	set	40.000,00		40.000,00	
13	Other documents Ostali dokumenti	1,0	set	14.000,00		14.000,00	
14	Construction site equipment Oprema za gradilište	1,0	set	160.000,00		160.000,00	
15	Information table Informaciona tabla	6,0	pc	1.500,00		9.000,00	
16	Commemorative tablet Komemorativna ploča	1,0	pc	2.000,00		2.000,00	
17	Management of trial operation during 1 year, training of employees, testing and commissioning Rukovođenje probnim radom tokom 1 godine, obuka zaposlenih, testiranje i puštanje u rad	1,0	set	48.000,00		48.000,00	
	TOTAL (TO GRAND SUMMARY) UKUPNO (ZA KONAČAN ZBIR)					**1.828.000,00**	

Signature of tenderer
Potpis ponuđača

GEORGIOS KARKANIAS
PRESIDENT

KARKANIAS ENVIRONMENTAL TECHNOLOGY S.A.
INDUSTRIAL AREA OF LARISA - GREECE
POSTAL CODE 41004, BOX 3053
TEL.: +30 2410 541566 - FAX: +30 2410 541354
Email: info@karkanias.gr
TAX NUMBER: 095244711
REGISTRATION NUMBER: 48779/31/B/01/12

*Specify currencies in accordance with the Instructions to Tenderers.
*Precizirati valute u skladu sa instrukcijama za ponuđače.

03/12/18

IFT Number 8732-IFT-41252
IFT Broj 8732 - IFT - 41252

Schedule No. 5
Tabela broj 5
PAGE 5 OF 6
STRANA 5 OD 6

SCHEDULE OF RATES AND PRICES
PRIKAZ TARIFA I CIJENA

SCHEDULE No. 5 - GRAND SUMMARY
TABELA BR. 5 - UKUPAN ZBIR

Name of tenderer **KARKANIAS - Environmental Technology SA**
Ime ponuđača

Page __of ___
Strana ___ od ___

Tender identification no. EBRD ME DAN 9000
Tenderski identifikacioni broj: EBRD ME DAN 9000

Item Stavka	Description Opis	Total price Ukupna cijena Foreign Currency Portion* Udio strane valute*	Total price Ukupna cijena Local Currency Portion* Udio domaće valute
1	**TOTAL SCHEDULE No. 1** **UKUPNO TABELA BR. 1** **Plant and Equipment, including mandatory spare parts, supplied from abroad** **Postrojenje i oprema, uključujući obavezne rezervne djelove, dobavljene iz inostranstva**	501.000,00	
2	**TOTAL SCHEDULE No. 2** **UKUPNO TABELA BR. 2** **Plant and Equipment, including mandatory spare parts, supplied from within the Employer's country Postrojenje i oprema, uključujući obavezne rezervne djelove, dobavljene iz zemlje poslodavca**	32.000,00	
3	**TOTAL SCHEDULE No. 3** **UKUPNO TABELA BR. 3** **Local Transportation** **Lokalni prevoz**	29.000,00	
4	**TOTAL SCHEDULE No. 4** **UKUPNO TABELA BR. 4** **Installation and other Services** **Ugradnja i druge usluge**	1.828.000,00	
	GRAND TOTAL (TO TENDER FORM) **KONAČAN ZBIR (ZA TENDERSKI OBRAZAC)**	**2.390.000,00**	

Signature of tenderer GEORGIOS KARKANIAS PRESIDENT
Potpis ponuđača

KARKANIAS ENVIRONMENTAL TECHNOLOGY S.A.
INDUSTRIAL AREA OF LARISA - GREECE
POSTAL CODE 41004, BOX 3053
TEL.: +30 2410 541386 - FAX: +30 2410 541354
Email: info@karkanias.gr
TAX NUMBER: 095244711
REGISTRATION NUMBER: 48779/31/B/01/12

*Specify currencies in accordance with the Instructions to Tenderers.
*Precizirati valute u skladu sa instrukcijama za ponuđače.

03/12/18

03/12/18

IFT Number 8732-IFT-41252
IFT Broj 8732 - IFT - 41252

Schedule No. 6
Tabela broj 6
PAGE 6 OF 6
STRANA 6 OD 6

SCHEDULE OF RATES AND PRICES
PRIKAZ TARIFA I CIJENA

SCHEDULE No.6 - RECOMMENDED SPARE PARTS
TABELA BR. 6 - PREPORUČENI REZERVNI DJELOVI

Name of tenderer **KARKANIAS - Environmental Technology SA**
Ime ponuđača

Page __of___
Strana ___ od ____

Tender identification no. EBRD ME DAN 9000
Tenderski identifikacioni broj: EBRD ME DAN 9000

			UNIT PRICE* JEDINIČNA CIJENA*		TOTAL PRICE
Item Stavka	Description Opis	Qty. Kol.	From abroad Iz inostranstva (CIP - prevoz i osiguranje plaćeni do)	From within Employer's country (EXW) Iz zemlje poslodavca (EXW - franko fabrika)	UKUPNA CIJENA (1 x 2 x 3)
		1	2	3	4
	Automatic cleaned fine screen (septage unit)				
	Brushes spare part kit for FCP 50 Fixing bolts included in stainless steel AISI304 L	1	430,00		430,00
	Submersible mixer (WILO -TR 21.145-4/11 S14)				
	Rep. Kit 3 T14/16/21/28 (Mechanical seal and o- rings)	2	127,20		254,40
	Medical white oil 1L KIT	4	12,60		50,40
	Submersible pumps (WILO-Rexa PRO V06 DA-623 / EAD1X4-T0015-540-O)				
	Rep. Kit 2 P13.2(Mechanical seal, ball bearings and o-rings)	2	63,00		126,00
	Medical white oil 1L KIT	4	12,60		50,40
	Submersible pumps (WILO-Rexa PRO C08 DA-435 / EAD1X2-T0039-540-O)				
	Rep. Kit 2 P13.2(Mechanical seal, ball bearings and o-rings)	3	63,00		189,00
	Medical white oil 1L KIT	6	12,60		75,60
	Compact mechanical pretreatment unit				
	Brushes spare part kit for FCP 50 Fixing bolts included in stainless steel AISI304 L	1	430,00		430,00
	Submersible mixer (WILO -TR 50-2.34-4/12 S)				
	Rep. Kit 3 TR.50 ... 90-2 (Mechanical seal and o- rings)	1	204,00		204,00
	Medical white oil 1L KIT	3	12,60		37,80
	Submersible mixers (XYLEM)				
	BASIC REPAIR KIT (seal ring, o-ring kit, ball bearing, roller bearing, wear protection, mechanical seal)	1	1.200,00		1.200,00

03/12/18

IFT Number 8732-IFT-41252
IFT Broj 8732 - IFT - 41252

Schedule No. 6
Tabela broj 6
PAGE 6 OF 6
STRANA 6 OD 6

SCHEDULE OF RATES AND PRICES
PRIKAZ TARIFA I CIJENA

SCHEDULE No.6 - RECOMMENDED SPARE PARTS
TABELA BR. 6 - PREPORUČENI REZERVNI DJELOVI

Name of tenderer **KARKANIAS - Environmental Technology SA**
Ime ponuđača

Page __of ___
Strana ___ od ___

Tender identification no. EBRD ME DAN 9000
Tenderski identifikacioni broj: EBRD ME DAN 9000

			UNIT PRICE* JEDINIČNA CIJENA*		TOTAL PRICE
Item Stavka	Description Opis	Qty. Kol.	From abroad Iz inostranstva (CIP - prevoz i osiguranje plaćeni do)	From within Employer's country (EXW) Iz zemlje poslodavca (EXW - franko fabrika)	UKUPNA CIJENA (1 x 2 x 3)
		1	2	3	4
	Submersible pumps (WILO-Rexa PRO C10 DA-518/ EAD0X4-T0035-540-O)				
	Rep. Kit 2 P13.2(Mechanical seal, ball bearings and o- rings)	2	63,00		126,00
	Medical white oil 1L KIT	4	12,60		50,40
	Submersible pumps (WILO-Rexa PRO V05 DA-222/ EAD1X2-T0025-540-O)				
	Rep. Kit 2 P13.2(Mechanical seal, ball bearings and o-rings).	3	63,00		189,00
	Medical white oil 1L KIT	6	12,60		75,60
	Submersible mixer (WILO -TR 36.145-4/12 S17)				
	Rep. Kit 3 TR22 ... 40 (Mechanical seal and o- rings)	1			
	Medical white oil 1L KIT	2			
	Submersible pump for jet aerator (WILO -FA 20.54E - T24 - 4/29K)				
	Rep. Kit 3 T242, T24K (Mechanical seal and o- rings)	1	268,20		268,20
	Medical white oil 1L KIT	10	12,60		126,00
	Rotary lobe blowers				
	SEAL RING 3760 55X080X08	4	15,83		63,32
	COMP. RING LMKAS-100A	12	7,15		85,80
	INTERNAL RING JR50X055X20	4	46,51		186,04
	OIL SPLASH DISK	4	6,92		27,68
	OIL SPLASH DISK	8	6,92		55,36
	OIL SPLASH DISK	4	6,92		27,68
	SEALING SPACER	8	30,50		244,00
	GASKET 234X341X0,5	8	7,15		57,20
	FLEXIBLE RING 65X3X2,5	32	7,15		228,80
	OIL LEVEL PLUG G 1/2'	16	10,90		174,40
	OIL FILLING PLUG G 1/2'	8	11,07		88,56
	OIL DRAINING PLUG G 1/2	8	7,38		59,04
	FILTER ELEMENT	4	20,18		80,72
	V-BELT (SET)	2	30,00		60,00

03/12/18

IFT Number 8732-IFT-41252
IFT Broj 8732 - IFT - 41252

Schedule No. 6
Tabela broj 6
PAGE 6 OF 6
STRANA 6 OD 6

SCHEDULE OF RATES AND PRICES
PRIKAZ TARIFA I CIJENA

SCHEDULE No.6 - RECOMMENDED SPARE PARTS
TABELA BR. 6 - PREPORUČENI REZERVNI DJELOVI

Name of tenderer **KARKANIAS - Environmental Technology SA**
Ime ponuđača

Page ___of___
Strana ___od___

Tender identification no. EBRD ME DAN 9000
Tenderski identifikacioni broj: EBRD ME DAN 9000

			UNIT PRICE* JEDINIČNA CIJENA*		TOTAL PRICE
Item Stavka	Description Opis	Qty. Kol.	From abroad Iz inostranstva (CIP - prevoz i osiguranje plaćeni do)	From within Employer's country (EXW) Iz zemlje poslodavca (EXW - franko fabrika)	UKUPNA CIJENA (1 x 2 x 3)
		1	2	3	4
	TRANSITION PULLEYS	2	120,00		240,00
	ELASTIC CONNECTOR FOR /P	2	20,82		41,64
	SHUTTER OF THE CHECK VALVE	2	23,66		47,32
	Dosing (diaphragm) pumps (GRUNDFOS)				
	VALVE/ DIAPHRAGM KIT	3	188,00		564,00
	Automatic cleaned microscreen rotary drum filter				
	Set of 36 pcs cli-clo cartridges	1	750,00		750,00
	UV disinfection automatic cleaned system				
	Ultratherm 220 longlife HO UV-lamp	16	547,18		8.754,88
	Ultratherm lamp driver 4x220W modbus	1	537,72		537,72
	220/350 Lamp/quartz assembly 5,0m	1	232,84		232,84
	Centrifuge (decanter)				
	Intermediate Kit Main Bearings	1	51,70		51,70
	Intermediate Kit Conveyor Bearings	1	124,00		124,00
	Major Kit Main Bearings	1	553,00		553,00
	Major Kit Conveyor Bearings	1	416,00		416,00

03/12/18

IFT Number 8732-IFT-41252
IFT Broj 8732 - IFT - 41252

Schedule No. 6
Tabela broj 6
PAGE 6 OF 6
STRANA 6 OD 6

SCHEDULE OF RATES AND PRICES
PRIKAZ TARIFA I CIJENA

SCHEDULE No.6 - RECOMMENDED SPARE PARTS
TABELA BR. 6 - PREPORUČENI REZERVNI DJELOVI

Name of tenderer **KARKANIAS - Environmental Technology SA**
Ime ponuđača

Page __of ___
Strana ___ od ___

Tender identification no. EBRD ME DAN 9000
Tenderski identifikacioni broj: EBRD ME DAN 9000

			UNIT PRICE* JEDINIČNA CIJENA*		TOTAL PRICE
Item Stavka	Description Opis	Qty. Kol.	From abroad Iz inostranstva (CIP - prevoz i osiguranje plaćeni do)	From within Employer's country (EXW) Iz zemlje poslodavca (EXW - franko fabrika)	UKUPNA CIJENA (1 x 2 x 3)
		1	2	3	4
	Progressing cavity sludge pumps (NOV PROCESS)				
	STATOR – MTM NITRILE RUBBER	4	360,00		1.440,00
	ROTOR (MK.1 H.C.P.)	4	580,00		2.320,00
	M/SEAL – SIC/SIC	4	145,00		580,00
	GASKET – GLAND	4	12,50		50,00
	Progressing cavity polyelectrolyte pumps (NOV PROCESS)				
	STATOR EPDM	2	180,00		360,00
	ROTOR C021	2	195,00		390,00
	M/SEAL – SIC/SIC	2	145,00		290,00
	GASKET - GLAND	2	12,50		25,00
				Total amount Ukupan iznos	23.089,50

Signature of tenderer
Potpis ponuđača

GEORGIOS KARKANIAS
PRESIDENT

KARKANIAS ENVIRONMENTAL TECHNOLOGY S.A.
INDUSTRIAL AREA OF LARISA - GREECE
POSTAL CODE 41004, BOX 3053
TEL.: +30 2410 541386 - FAX: +30 2410 541354
Email: info@karkanias.gr
TAX NUMBER: 095244711
REGISTRATION NUMBER: 48779/31/B/01/12

*Specify currencies in accordance with the Instructions to Tenderers.
*Precizirati valute u skladu sa instrukcijama za ponuđače.

03/12/18

Important note:

In accordance with Preamble in the main folder (Volume I.vii – Price Schedules – Preamble) - unless implied otherwise from the description of items in the Price Schedules No. 1 to No. 5, the unit prices shall include costs of the following:

1 Establishment, maintenance, and winding-up of the storehouses, offices, and other facilities of the Contractor (including electricity fees, water and sewage charges, fees for printing, copying and consumable supplies, and telecommunication fees);
2 Detailed setting-out of the Work performed by the Contractor;
3 Setting-out of all utility services (incl. their connections, electricity, control and signal cables, grounding, and anticorrosion protection elements) by their operators and provision of necessary permits and approvals prior to the work commencement, including fees;
4 Technical survey of existing structures;
5 Geological survey;
6 Geodetic measurements;
7 Archaeological survey for the purpose of preservation of archaeological findings and sites assumed to be discovered within the construction site in question;
8 Traffic organisation project and its approval, including fees. Installation of temporary and restoration of permanent traffic signs, incl. relevant fees;
9 Construction flood protection plan, Emergency plan for leakage of substances hazardous for water, Work safety and health protection plan, Inspection and test plan, Plan of environmental protection for the construction duration, inc. negotiations and approvals;
10 Construction site plan documents, incl. negotiations with the operators of utility lines and equipment concerned, negotiations with the owners of estates concerned and conclusions of relevant contracts;
11 Provision of all necessary permits and opinions prior to the commencement of works and during the construction, incl. fees;
12 Purchase/procurement of all materials, accessories and auxiliary construction materials, regardless of the fact whether they are included in Schedules;
13 All measures taken in connection with excavation works (sheeting, sloping, groundwater pumping, monitoring bores, technical equipment maintenance, etc.) resulting from the engineering-geological and hydro-geological surveys performed;
14 Vertical and horizontal transfer of any materials and plant and equipment in any quantities (materials for incorporation of products, excavated soil, removed foundation and surface layers of hard-surface/unpaved roads and pavements, water pumped from trenches and foundation pits, etc.) within and outside the Site, incl. fees;
15 Loading/unloading and transport of demolished materials, debris to a landfill at any distance, incl. landfill fees;
16 Loading/unloading and transport of excessive soil to a landfill at any distance, incl. landfill fees;
17 Clearing rooms and debris removal during demolishing as well as construction works;
18 Pumping and clearing of spaces and removal of waste to a landfill at any distance, incl. landfill fees;
19 Transfer of materials to/from temporary dumping sites, incl. loading, unloading, and fees, and including establishment and maintenance of temporary dumping sites and restoring the temporary dumping sites to their original state (confirmed by the owner(s) of estates concerned);
20 Preparatory and finishing bricklaying works and other preparatory and auxiliary construction works related to the assembly of sanitary installation, air-conditioning system, construction wiring, technological equipment, fitting windows, doors and frames, etc.;
21 Delivery and assembly of all connections of piping of all materials (reducers, flanges, sleeves, etc.), delivery and assembly of connections of all piping lines (welds, sockets, couplers, flanges, etc.), incl. branches; watertight piping passages through walls of manholes, tanks, and chambers (manhole sockets, etc.). Piping connection at the border of the construction and technological deliveries.
22 Compacting of all piping and cabling beds, backfills, fills, and mounds – in 0.2-0.3m layers;

03/12/18

23 Auxiliary assembly materials (tubes, cable eyes, wall plugs, fasteners, marking material, warning signs, cable strips, cable bushings, etc.;
24 All auxiliary works such as construction of scaffoldings, supports, dykes, sheeting of foundation pits and trenches incl. the use of Larsen sheet piles, and their removal;
25 Installation of all products and equipment, accessories and auxiliary construction materials and works;
26 Loss money;
27 Temporary piping and cable connections, passages, bypasses, and pumping for the provision of the sewerage system operation during the construction and gradual putting new structures into operation, incl. preparatory works, provision of reserve power supply and its operation;
28 Furnishing, securing, lighting, and heating of workplaces, machinery, auxiliary equipment, mechanisation, scaffoldings, storage areas and spaces, and work huts of the Contractor;
29 Partial closure and use of public communications if necessary for the work execution, incl. fees;
30 Protection of adjoining or surrounding plots against contamination or damages, removal of contamination and damages;
31 Cleaning of roads as required by valid regulations, incl. waste disposal;
32 Installation and removal of any casing used for concreting, incl. casing material supply, reinforcement in reinforced-concrete structures acc. to structural analyses and bending schedules of the Contractor;
33 Delivery, assembly, and disassembly of all parts of the temporary Work;
34 Delivery and assembly of all parts of the permanent Work, incl. connection, testing, and activation of technological equipment;
35 Establishment of temporary access roads, diversions, temporary road widening, bridging of trenches;
36 Temporary diversion of water courses incl. installation and removal of temporary dykes made of any material and piping used for this purpose;
37 Pumping of groundwater from trenches and foundation pits during the construction, incl. temporary piping and cabling connections, passages, bypasses (building, usage and removal), incl. preparatory works, provision of reserve power supply and its operation, obtaining permission and fees for discharging and possible treatment as specified by valid legislation, and incl. provision of reserve power supply and its operation;
38 Protective measures for the work executed and equipment delivered until their acceptance by the Employer;
39 Completion of the civil and building works and technological works (plant) incl. revisions, connection and activation, control measurements and adjustment of equipment, heating tests, etc.;
40 Obtaining approvals of concerned authorities and state organisations required for putting the Work into operation;
41 Elaboration of an individual (pre-commissioning) and complex (commissioning) test schedule and execution of all tests, monitoring, inspections, certificates, and revisions, incl. provision of media, connection, bleeding, filling the piping, etc., incl. preparatory works;
42 Removal of construction material from the structures built, and piping flushing and disinfection if required;
43 Works performed as resulting from the requirements of organisations and state authorities concerned;
44 General risks such as aggravated excavation conditions, adhesiveness, aggravated transport conditions, local influences, operational influences, necessary additional surveys (if executed);
45 All labour costs, taxes, Contractor's supervision, benefits, non-residence allowances, travel allowances, and expenditures;
46 Provision of compliance with requirements related to the occupational safety and health protection (poling boxes, planks, laths, ladders, securing trenches, protective gloves, helmets, footwear, etc.);
47 Elaboration and Provision of compliance with requirements related to the environmental protection and waste disposal including communication cleaning;

03/12/18

48 Provision of compliance with requirements of the quality management system;
49 Provision of compliance with requirements of road and traffic authorities (purchase/leasing, installation, and maintenance of traffic signs, railings, lighting of trenches, restoration of permanent traffic signs, etc.), incl. traffic organisation project and its approval, incl., fees;
50 All basic and secondary costs or overhead costs necessary for perfect and complex execution of works;
51 All secondary or overhead costs necessary for perfect and complex execution of works;
52 All Temporary Works not specified in the Schedules (e.g. temporary diversions, bridging trenches with light or heavy structures, repair of local communications, bridges, country lanes, and estates damaged by construction activities, re-laying bus stops, temporary access roads, etc.);
53 Loading/unloading, transport and disposal of waste, incl. all fees;
54 Expenses resulting from compensation agreements submitted by the Employer;
55 Elaboration of a plan of individual and complex tests;
56 Elaboration of a plan of training and a schedule of the beginning of activities into trial operation;
57 Training of personnel;
58 Passport of existing access roads which could be damaged or affected by the work activities of the Contractor during the construction;
59 Basic Design and Detail Design within the scope specified in Volume II.ii, incl. complete engineering activities and procurement of all necessary permits;
60 Production (works) documentation, incl. provision of necessary approvals and opinions of organisations and state authorities concerned;
61 As-built Documents including laying-out and geodetic plans for the purpose of inclusion into the cadastre within the scope specified in Volume II.ii;
62 Operation manuals during the construction, for early use of construction parts and for trial and permanent operation;
63 Elaboration of methodical instructions for the trial operation control and methodical management and evaluation of trial operation.

Items will be completed in accordance with specific design of the Contractor.

03/12/18

03/12/18

Važna napomena: U skladu sa Preambulom (Poglavlje I.vii – Finansijski dio ponude - Preambula), osim ako nije drugačije naznačeno u opisu stavki u tabelama od broja 1 - 5, jedinične cijene uključuju troškove sljedećih elemenata:

1. Otvaranje, održavanje i likvidacija skladišta, kancelarija i drugih objekata izvođača radova (uključujući troškove za električnu energiju, vodu i kanalizaciju, za štampanje, kopiranje i potrošni materijal, kao i za telekomunikacione usluge);
2. Detaljno planiranje radova koje obavlja izvođač;
3. Uspostavljanje svih komunalnih usluga (uključujući priključke, struju, kontrolne i signalne kablove, uzemljenje i antikorozivne zaštitne elemente) od strane operatera i obezbjeđivanje neophodnih dozvola i odobrenja prije početka rada, uključujući naknade;
4. Tehnički pregled postojećih struktura;
5. Geološka istraživanja;
6. Geodetska merenja;
7. Arheološka istraživanja u cilju očuvanja arheoloških nalazišta i lokacija za koje se pretpostavlja da će biti otkrivene na predmetnom gradilištu;
8. Plan organizacije saobraćaja i njegovo odobrenje, uključujući naknade. Ugradnja privremenih i restauracija trajnih saobraćajnih znakova, uklj. odgovarajuće naknade;
9. Plan za zaštitu od poplava, plan hitnog reagovanja u slučaju curenja materija štetnih za vodu, plan zaštite na radu i zaštite zdravlja, plan nadzora i testiranja, plan zaštite životne sredine u toku trajanja izgradnje, uklj. pregovore i saglasnosti;
10. Planska dokumentacija gradilišta, uklj. pregovore sa operaterima zaduženim za komunalne usluge i opremu, pregovore sa vlasnicima dotičnih imanja i zaključivanje relevantnih ugovora;
11. Obezbjeđivanje svih potrebnih dozvola i mišljenja prije početka radova i tokom izgradnje, uklj. naknade;
12. Kupovina/nabavka svih materijala, dodatne opreme i pomoćnog građevinskog materijala, bez obzira na to da li su uključeni u finansijski dio ponude;
13. Sve mjere koje se preduzimaju u vezi sa radovima na iskopavanju (oblaganje, izrada kosina, ispumpavanje podzemne vode, bušotina za monitoring, održavanje tehničke opreme itd.) koje proizilaze iz inženjersko-geoloških i hidrogeoloških ispitivanja;
14. Vertikalni i horizontalni prenos materijala, postrojenja i opreme u bilo kojoj količini (materijali za ugradnju proizvoda, iskopano zemljište, uklonjeni temelj i površinski slojevi čvrstih/neasfaltiranih puteva i trotoara, voda ispumpana iz rovova i temeljnih jama itd.) u okviru i van lokacije, uklj. naknade;
15. Utovar/istovar i transport porušenog materijala i otpada na deponiju na bilo kojoj udaljenosti, uklj. naknade za deponije;
16. Utovar/istovar i transport suvišnog zemljišta na deponiju na bilo kojoj udaljenosti, uklj. naknade za deponije;
17. Raščišćavanje prostorija i uklanjanje otpada tokom rušenja, kao i građevinski radovi;
18. Isušivanje i čišćenje prostora i uklanjanje otpada na deponiju na bilo kojoj udaljenosti, uklj. naknade za deponije;
19. Prenos materijala na/sa privremene lokacije za odlaganje otpada, uklj. utovar, istovar, naknade, kao i određivanje i održavanje privremenih lokacija za odlaganje otpada i vraćanje privremenih lokacija za odlaganje otpada u njihovo prvobitno stanje (potvrđeno od strane vlasnika imanja o kom se radi);

03/12/18

20. Pripremni i završni zidarski radovi i ostali pripremni i pomoćni građevinski radovi vezani za postavljanje sanitarnih instalacija, klima uređaja, građevinskih instalacija, tehnološke opreme, prozora, vrata i okvira itd.
21. Isporuka i montaža svih priključaka za cijevi svih materijala (reduktori, prirubnice, rukavi, itd.), isporuka i povezivanje cjevovoda (zavarivanje, priključci, spojnice, prirubnice, itd.), uklj. ogranke; vodonepropusne spojnice kroz zidove šahtova, rezervoara i šupljina (priključak za šahtu, itd.). Povezivanje cijevi sa instalacijama na obodu gradilišta i isporuka tehnoloških sredstava.
22. Nabijanje posteljica svih cijevi i kablova, zatrpavanje, popunjavanje i nasipanje - u slojevima od 0,2 - 0,3 m;
23. Pomoćni materijali za montažu (cijevi, kablovske stopice, tipla, šrafovi, materijal za označavanje, znaci upozorenja, kablovske vezice, kablovski prstenovi itd.)
24. Svi pomoćni radovi kao što su izgradnja skela, podupirača, nasipa, oblaganje temeljnih jama i rovova uklj. korišćenje Larsenovih šipova i njihovo uklanjanje;
25. Ugradnja svih proizvoda i opreme, dodatna oprema i pomoćni građevinski materijali i izvođenje radova;
26. Gubitak novca;
27. Privremeni cjevovodi i kablovski priključci, prolazi, skretnice i pumpa za obezbjeđivanje rada kanalizacionog sistema tokom izgradnje i postepeno puštanje novih objekata u rad, uklj. pripremne radove, obezbjeđivanje rezervnog snabdijevanja električnom energijom i njegovo funkcionisanje;
28. Opremanje, obezbjeđenje, osvjetljenje i zagrijavanje radnih mjesta, mašina, pomoćne opreme, mehanizacije, skela, skladišnih površina i prostora i montažnih kućica izvođača radova;
29. Djelimično zatvaranje i korišćenje javnih komunikacija ukoliko je potrebno za izvođenje radova, uklj. naknade;
30. Zaštita susjednih ili okolnih parcela od zagađenja ili oštećenja, uklanjanje zagađenja i oštećenja;
31. Čišćenje puteva prema važećim propisima, uklj. odlaganje otpada;
32. Ugradnja i uklanjanje kućišta za ugradnju u beton, uklj. nabavku kućišta, armiranje u armiranobetonskim konstrukcijama prema strukturnoj analizi i proračunu karakteristika čelika koji uradi izvođač;
33. Isporuka, montaža i demontaža svih djelova privremenih radova;
34. Isporuka i montaža svih djelova trajnih radova, uklj. povezivanje, ispitivanje i aktiviranje tehnološke opreme;
35. Uspostavljanje privremenih pristupnih puteva, preusmjeravanje, privremeno širenje puta, premošćavanje rovova;
36. Privremeno preusmjeravanje vodotoka uključujući ugradnju i uklanjanje privremenih nasipa napravljenih od bilo kog materijala i cijevi korištenih u tu svrhu;
37. Pumpanje podzemnih voda iz rovova i temeljnih jama tokom izgradnje, uklj. privremene cjevovode i kablovske priključke, prolaze, skretnice (izgradnja, upotreba i uklanjanje), uklj. pripremne radove, obezbjeđivanje rezervnog snabdijevanja električnom energijom i njegovo funkcionisanje, dobijanje dozvole i naknade za odvođenje i eventualno prečišćavanje prema važećem zakonodavstvu, uklj. obezbjeđivanje rezervnog napajanja električnom energijom i njegovo funkcionisanje;
38. Zaštitne mjere za izvršeni rad i isporučenu opremu do njihovog prihvatanja od strane poslodavca;

03/12/18

39. Završetak građevinskih i tehnoloških radova (postrojenja) uklj. revizije, povezivanje i aktiviranje, kontrolna mjerenja i podešavanje opreme, ispitivanja grijanja itd .;
40. Pribavljanje saglasnosti odgovarajućih organa i državnih organizacija potrebnih za izvođenje radova;
41. Izrada pojedinačnog (prije puštanja u rad) i složenog (prilikom puštanja u rad) redosljeda ispitivanja i izvršenje svih ispitivanja, praćenje, nadzor, sertifikati i revizija, uklj. obezbjeđivanje medija, priključivanje, ispuštanje, punjenje cijevi itd., uklj. pripremne radove;
42. Uklanjanje građevinskog materijala iz izgrađenih objekata i ispiranje i dezinfekcija cijevi, ako je potrebno;
43. Radovi izvršeni kao rezultat zahtjeva organizacija i odgovarajućih državnih organa;
44. Opšti rizici, kao što su otežani uslovi iskopavanja, adhezivnost, otežani uslovi prevoza, lokalni uticaji, operativni uticaji, neophodna dodatna istraživanja (ako se izvrše);
45. Svi troškovi rada, porezi, nadzor izvođača, benefiti, naknade nerezidentima, troškovi prevoza i rashodi;
46. Obezbjeđivanje usaglašenosti sa zahtjevima vezanim za zaštitu na radu i zdravstvenu zaštitu (kutije, daske, letve, merdevine, zaštitni rovovi, zaštitne rukavice, kacige, obuća itd.);
47. Izrada i obezbjeđivanje usaglašenosti sa zahtjevima vezanim za zaštitu životne sredine i odlaganje otpada uključujući čišćenje pristupnih puteva;
48. Obezbjeđivanje usaglašenosti sa zahtjevima sistema upravljanja kvalitetom;
49. Obezbjeđivanje usaglašenosti sa zahtjevima nadležnih organa za puteve i saobraćaj (kupovina/zakup, ugradnja i održavanje saobraćajnih znakova, ograde, osvjetljenje rovova, obnavljanje trajnih saobraćajnih znakova itd.), uklj. projekat organizacije saobraćaja i njegovo usvajanje, uklj. naknade;
50. Svi osnovni i sekundarni troškovi ili režijski troškovi neophodni za savršeno i složeno izvođenje radova;
51. Svi sekundarni ili režijski troškovi neophodni za savršeno i složeno izvođenje radova;
52. Svi privremeni radovi koji nisu navedeni u tabelama (npr. privremena preusmjeravanja, premošćivanje rovova lakim ili teškim strukturama, popravka lokalnih puteva, mostova, seoskih puteva i imanja oštećenih građevinskim aktivnostima, premještanje autobuskih stajališta, privremenih pristupnih puteva itd. .);
53. Utovar/istovar, transport i odlaganje otpada, uklj. sve troškove;
54. Troškovi koji proizlaze iz ugovora o kompenzaciji koje podnosi poslodavac;
55. Izrada plana individualnih i složenih testova;
56. Izrada plana obuke i rasporeda početka aktivnosti u okviru probnog rada;
57. Obuka osoblja;
58. Dozvola za postojeće pristupne puteve koji mogu biti oštećeni ili pogođeni radnim aktivnostima izvođača tokom izgradnje;
59. Osnovni dizajn i detaljni dizajn u opsegu navedenom u poglavlju II.ii, uklj. sve građevinske aktivnosti i nabavku svih potrebnih dozvola;
60. Proizvodna (radna) dokumentacija, uklj. obezbjeđivanje potrebnih saglasnosti i mišljenja organizacija i odgovarajućih nadležnih organa;
61. Dokumentacija izvedenog stanja uključujući detaljne geodetske planove u svrhu upisivanje u katastar u opsegu utvrđenom u poglavlju II.ii;
62. Uputstva za rukovanje tokom izgradnje, za ranu upotrebu građevinskih djelova i za probni i trajni rad;

03/12/18

63. Izrada metodičkih uputstava za kontrolu probnog rada i metodičko upravljanje i evaluaciju probnog rada.
Stavke će biti popunjene u skladu sa specifičnim projektom izvođača.

03/12/18

AIKATERINI D. VASILEIOU
NOTARY
(contact details)

COPY

NUMBER 290

POWER OF ATTORNEY

In the town of Larissa, today on the fifth (5) of the month of September of the year two thousand eighteen(2018), day of Wednesday, at my office of the building, located on the third floor of 4 Kouma str., before me the Notary of Larissa **AIKATERINI VASILEIOU**, daughter of Dimitrios and Valentini, having as my seat and residence Larissa, with TIN 047010021 belonging of the P.F.S. af Larissa, appeared the below mentioned, non exempted by the law, **Vasiliki Karkania, of Apostolos and Stamatia**, with T.I.N. 128996162, P.F.S. A' of LARISSA, chemical engineer, born in Larissa on 15-3-1985, where she resides on 3 Farmaki str., holder of the Police Identity Card no. AK 407175/11-11-2011 by the S.S. Of Larissa, who acts in the present as managing director and representative of the anonymous society denominated: "KARKANIAS ENVIRONMENTAL TECHNOLOGY S.A." and with the distinctive title: "KARKANIAS" having its seat in the IND. AR. Of LARISSA with T.I.N. 095244711, P.F.S. B' of Larissa, with GEMI number: 026564640000. This company was incorporated with the contract no. 21.180 / 10-04-2001 of the notary of Larissa Eleni - Evgenia Romosiou - Kleitsaki,

03/12/18

03/12/18

recorded in the Registry of Anonymous Societies on 12-04-2001, with number 48779/31/B/01/12, approved and the license number K 1009/12-4-2001 was administered by the Prefect of Larissa, the summary of its memorandum, the registration of the approval and the license were published in the G.G. Number 2.393/30-04-2001 (Issue S.A. And L.L.C.), copies of which are attached in my present act. After successive modifications of the above memorandum, as in force coded, it has been registered in the company's share in GEMI, a copy of which with protocol number: 350511.495898, is attached to my present act. The last Board of Directors, managing the above company, was elected with five year tenure, ending on 13-12-2016, from the General Assembly of its shareholders from 14-12-2016 and was constituted with the minutes of the Board of Directors from 14-12-2016, the relevant minutes were registered in the competent G.E.MI. Service with code number 861643, as it results from the notification with prot. No. 727949/20-12-2016 of the above service, which is attached in the present, and until today it has not been further modified, or has been dissolved, or placed in bankruptcy or liquidation, as responsibly declared by the above representative of the company. The person appearing here, was authorized by the Board of Directors of the above company for signing the present with the minutes of the Board of Directors no. 1068/04-09-2018, a copy of which is attached in the present. The person appearing here asked me to compile this act, with which she declared that the company she represents, namely the anonymous society having its seat in the Municipality of Tempi (IN. AR. of LARISSA) anonymous society with the denomination "KARKANIAS ENVIRONMENTAL TECHNOLOGCY S.A." in order to participate in the tender for the assumption of the

03/12/18

03/12/18

work with full title: Danilovgrad Municipal Infrastructure – construction of wastewater plant, Tender No: EBRD ME DAN 9000, on the state of Montenegro(Danilovgrad Municipal Infrastructure – construction of wastewater plant, Tender No: EBRD ME DAN 9000), which takes place in Caja Scepanovica bb Danilovgrad 81410 State of Montenegro, on September 13 2018 or at any other date after postponement, designates and reinstates its special attorney, representative and process agent: 1) Georgios Karkanias of Apostolos and Stamatia, born on 03-08-1983 in Larissa - Greece, where he resides on 3 Farmaki str., holder of the Hellenic Republic Passport no. AK5153599, and 2) Aristeidis Oikonomou of Dimitrios and Panagiota, born on 22-09-1969 on Larissa - Greece, where he resides at Terpsithea Larissa, holder of the Passport No. C5HTVTZHF/09-06-2009 of the Republic of Germany and 3) Vasileios Margaritis of Alexandros and Pinelopi, born on 14-06-1985 in Larissa - Greece, where he resides on 8 Aristeidou str., holder of the Hellenic Republic Passport no. AK4571542, **to whom it gives the special order and power of attorney, acting jointly or separately, in its place, in its name (the company "KARKANIAS ENVIRONMENTAL TECHNOLOGY S.A.") and on its behalf**, to submit the file of the tender, before the tender Committee for the undertaking of the above work. Furthermore to authorize them to sign and submit any relative document during the whole tender. The above representative of the company "KARKANIAS ENVIRONMENTAL TECHNOLOGY S.A.", with the capacity she appears in the present act, she also declared responsibly and according to the provisions of the L. 1599/1986 that the residence declared and mentioned in the beginning of the present and the company's seat

03/12/18

03/12/18

represented is the real, legal and true, and the company has not been dissolved or placed under bankruptcy or liquidation. The person who appeared, with her capacity in the present, declares that she approves and recognizes from now, all the actions of the above representatives, which refer to the above orders, as legal, valid, strong and unassailable and legally binding the company represented by them and that this power of attorney is valid until revoked and its revocation is legally notified.

In witness whereof this power of attorney was compiled, in two (2) leaves. A megarosimo stamp (1,00) euro was affixed in the original and (2,00) euros for the copy. For the rights of the present, as well for the rights of issuing one copy, (36,00) euros were collected. On the collected rights, VAT was collected, euros (8,64). I read this power of attorney loudly for the representative of the principal to hear it, who certified its whole content and singed it, as well as myself the notary, as provided by the law.

THE PRINCIPAL'S REPRESENTATIVE THE NOTARY

SIGNATURES FOLLOW (signature, seal)

Exact Translation from the attached Greek Original

Larissa 07/09/2018

The official translator

Sokratis Kyriazis

NETWORK OF TRANSLATION CENTERS
ERMINIA
SOKRATIS KYRIAZIS
TEL. & FAX 2410 626055
VAT 045564280

03/12/18

03/12/18

ΑΙΚΑΤΕΡΙΝΗ Δ. ΒΑΣΙΛΕΙΟΥ
ΣΥΜΒΟΛΑΙΟΓΡΑΦΟΣ
ΚΟΥΜΑ 4 - 3ος ΟΡΟΦΟΣ - 41222 - ΛΑΡΙΣΑ
ΤΗΛ. / FAX : 2413019775
ΑΦΜ : 047010021 - Α' ΔΟΥ ΛΑΡΙΣΑΣ
Email : katvas9987@yahoo.gr

ΑΝΤΙΓΡΑΦΟ

ΑΡΙΘΜΟΣ 290

ΠΛΗΡΕΞΟΥΣΙΟ

Στην πόλη της Λάρισας, σήμερα στις πέντε (5) του μηνός Σεπτεμβρίου του έτους δύο χιλιάδες δέκα οκτώ (2018), ημέρα Τετάρτη, στο γραφείο μου, που βρίσκεται στον τρίτο όροφο της επί της οδού Κούμα αριθμός 4 οικοδομής, ενώπιον εμού της Συμβολαιογράφου Λάρισας **ΑΙΚΑΤΕΡΙΝΗΣ ΒΑΣΙΛΕΙΟΥ** του Δημητρίου και της Βαλεντίνης, που έχω έδρα και κατοικία στη Λάρισα, με ΑΦΜ 047010021 ανήκουσα στην Δ.Ο.Υ. Λάρισας, παρουσιάσθηκε η παρακάτω μη εξαιρούμενη από το νόμο **Βασιλική Καρκανιά του Αποστόλου και της Σταματίας,** με Α.Φ.Μ. 128996162 της Δ.Ο.Υ. Α' ΛΑΡΙΣΑΣ, χημικός μηχανικός, που γεννήθηκε στη Λάρισα στις 15-03-1985, όπου και κατοικεί στην οδό Φαρμάκη αριθμός 3, κάτοχος του Δελτίου Αστυνομικής Ταυτότητας υπ' αριθμόν ΑΚ 407175/11-11-2011 εκδοθέν από την Υ.Α Λάρισας, η οποία ενεργεί στο παρόν ως Διευθύνουσα Σύμβουλος και εκπρόσωπος της ανωνύμου εταιρείας με την επωνυμία: **«ΚΑΡΚΑΝΙΑΣ ΤΕΧΝΟΛΟΓΙΑ ΠΕΡΙΒΑΛΛΟΝΤΟΣ Α.Ε.»** και με τον διακριτικό τίτλο: **«ΚΑΡΚΑΝΙΑΣ»**, που εδρεύει στην ΒΙ.ΠΕ. ΛΑΡΙΣΑΣ, με Α.Φ.Μ. 095244711 της Δ.Ο.Υ. Β' Λάρισας, με αριθμό ΓΕΜΗ 026564640000. Η εταιρεία αυτή συστάθηκε αρχικά με το υπ' αριθμόν 21.180/10-04-2001 συμβόλαιο της συμβολαιογράφου Λάρισας Ελένης - Ευγενίας Ρομοσιού - Κλειτσάκη, καταχωρήθηκε στο Μητρώο Ανωνύμων

03/12/18

Εταιρειών στις 12-04-2001, με αριθμό 48779/31/Β/01/12, εγκρίθηκε δε και της παρασχέθηκε η άδεια με την με αριθμό Κ 1009/12-4-2001 απόφαση του Νομάρχη Λάρισας, περίληψη δε του καταστατικού της, της καταχώρησης της έγκρισης και της αδείας δημοσιεύθηκαν στο με αριθμό 2.393/30-04-2001 Φ.Ε.Κ (Τεύχος Α.Ε. και Ε.Π.Ε.), αντίγραφα των οποίων προσαρτώνται στην παρούσα πράξη μου. Μετά από διαδοχικές τροποποιήσεις το ως άνω καταστατικό, όπως ισχύει κωδικοποιημένο, έχει καταχωρηθεί στην μερίδα της εταιρίας στο ΓΕΜΗ, αντίγραφο του οποίου με αριθμό πρωτοκόλλου 350511.495898, προσαρτάται στην παρούσα πράξη μου. Το τελευταίο Διοικητικό Συμβούλιο, που διοικεί την ως άνω εταιρία, εκλέχθηκε με πενταετή θητεία λήγουσα την 13-12-2021, από την από 14-12-2016 Γενική Συνέλευση των μετόχων της και συγκροτήθηκε σε σώμα με το από 14-12-2016 πρακτικό του Διοικητικού της Συμβουλίου, το δε σχετικό πρακτικό καταχωρήθηκε στην αρμόδια υπηρεσία Γ.Ε.ΜΗ. με κωδικό αριθμό 861643, όπως προκύπτει από την με αριθμό πρωτοκόλλου 727949/20-12-2016 ανακοίνωση της ως άνω υπηρεσίας, η οποία προσαρτάται στην παρούσα, και μέχρι σήμερα δεν έχει δε τροποποιηθεί περαιτέρω, ούτε έχει λυθεί ή τεθεί σε πτώχευση ή σε εκκαθάριση, όπως μου δήλωσε υπεύθυνα η πιο πάνω εκπρόσωπος της εταιρίας. Η εδώ εμφανιζόμενη, εξουσιοδοτήθηκε από το Διοικητικό Συμβούλιο της ως άνω εταιρείας για την υπογραφή της παρούσης με το υπ' αριθμόν 1068/04-09-2018 πρακτικό του Διοικητικού Συμβουλίου, αντίγραφο του οποίου προσαρτάται στην παρούσα. Η εδώ εμφανιζόμενη μου ζήτησε να συντάξω την πράξη αυτή, με την οποία δήλωσε ότι η εταιρεία που εκπροσωπεί, δηλαδή η

03/12/18

εδρεύουσα στο Δήμο Τεμπών (ΒΙ.ΠΕ. ΛΑΡΙΣΑΣ) ανώνυμη εταιρεία με την επωνυμία «ΚΑΡΚΑΝΙΑΣ ΤΕΧΝΟΛΟΓΙΑ ΠΕΡΙΒΑΛΛΟΝΤΟΣ Α.Ε.» προκειμένου να συμμετάσχει στο δεύτερο στάδιο του διαγωνισμού για την ανάληψη του έργου με πλήρη τίτλο: Ντάνιλοβγκράντ Μουνίσιπαλ Ινφραστράκτσιουρ – κονστράξιον οβ γουέιστγουότερ πλαντ, Τέντερ Νο: EBRD ME DAN 9000, στο κράτος του Μαυροβουνίου (Danilovgrad Municipal Infrastructure – construction of wastewater plant, Tender No: EBRD ME DAN 9000), ο οποίος διενεργείται στη Κάγια Σκεπανόβικα μπιμπι Ντανίλοβγκραντ 81410 Στέιτ οφ Μοντενέγκρο (Caja Scepanovica bb Danilovgrad 81410 State of Montenegro), στις 13 Σεπτεμβρίου 2018 ή και σε κάθε άλλη τυχόν μετ' αναβολή ημερομηνία, ορίζει και αποκαθιστά ειδικούς αυτής αντιπροσώπους, πληρεξουσίους και αντικλήτους της τους: 1) Γεώργιο Καρκανιά του Αποστόλου και της Σταματίας, που γεννήθηκε την 03-08-1983 στη Λάρισα - Ελλάδα, όπου και κατοικεί στην οδό Φαρμάκη αριθμό 3, κάτοχο του με αριθμό ΑΚ5153599 διαβατηρίου της Ελληνικής Δημοκρατίας, 2) Αριστείδη Οικονόμου του Δημητρίου και της Παναγιώτας, που γεννήθηκε την 22-09-1969 στη Λάρισα - Ελλάδα, όπου και κατοικεί στην Τερψιθέα Λάρισας, κάτοχο του με αριθμό C5HTVTZHF/09-06-2009 διαβατηρίου της Δημοκρατίας της Γερμανίας και 3) Βασίλειο Μαργαρίτη του Αλεξάνδρου και της Πηνελόπης, που γεννήθηκε την 14-06-1985 στη Λάρισα – Ελλάδα, όπου και κατοικεί στην οδό Αριστείδου αριθμός 8, κάτοχο του με αριθμό ΑΚ4571542 διαβατηρίου της Ελληνικής Δημοκρατίας, **στους οποίους δίδει την ειδική εντολή και πληρεξουσιότητα ενεργώντας είτε από κοινού είτε ο καθένας μόνος του όπως αντ' αυτής, στο όνομα αυτής (της εταιρίας «ΚΑΡΚΑΝΙΑΣ ΤΕΧΝΟΛΟΓΙΑ ΠΕΡΙΒΑΛΛΟΝΤΟΣ Α.Ε.») και για λογαριασμό της** να υποβάλλουν τον φάκελο προσφοράς, ενώπιον της Επιτροπής

Τα δικαιώματα του παρόντος αντιγράφου επιφυλάχθηκαν και αναφέρονται στο πρωτότυπο του συμβολαίου, μη αποτιούμενης της εκδόσεως ΔΑΠΥ, σύμφωνα με το άρθρο 3 παρ. 4 του Κ.Β. κ.Σ.

03/12/18

Διαγωνισμού για την ανάληψη του ανωτέρω έργου. Επίσης τους εξουσιοδοτεί όπως υπογράφουν και υποβάλλουν κάθε σχετικό έγγραφο καθ' όλη την διάρκεια του διαγωνισμού. Η παραπάνω εκπρόσωπος της εταιρίας «ΚΑΡΚΑΝΙΑΣ ΤΕΧΝΟΛΟΓΙΑ ΠΕΡΙΒΑΛΛΟΝΤΟΣ Α.Ε.», με την ιδιότητα που παρίσταται στην παρούσα πράξη μου, δήλωσε ακόμη υπεύθυνα και σύμφωνα με τις διατάξεις του Ν. 1599/1986 ότι η κατοικία της που δηλώθηκε και αναφέρθηκε στην αρχή αυτού και η έδρα της εταιρείας που εκπροσωπεί είναι η πραγματική, η νόμιμη και αληθινή, η δε εταιρία δεν έχει λυθεί ή τεθεί σε εκκαθάριση ή πτώχευση. Η εμφανισθείσα, με την ιδιότητα που παρίσταται στην παρούσα, δηλώνει ότι εγκρίνει και αναγνωρίζει από τώρα, όλες τις πράξεις των ως άνω εκπροσώπων, οι οποίες έχουν σχέση με τις πιο πάνω εντολές, ως νόμιμες, έγκυρες, ισχυρές και απρόσβλητες και νομικά δεσμεύουσες την εκπροσωπούμενη από αυτούς εταιρία και ότι το πληρεξούσιο αυτό ισχύει μέχρι να ανακληθεί και να γνωστοποιηθεί νόμιμα η ανάκλησή του.

Σε βεβαίωση όλων των ανωτέρω συντάχθηκε το πληρεξούσιο αυτό, σε δύο (2) φύλλα. Επικολλήθηκε τέλος μεγαροσήμου (1,00) ευρώ για το πρωτότυπο και (2,00) ευρώ για το αντίγραφο. Για δικαιώματα του παρόντος, καθώς και για δικαιώματα εκδόσεως ενός αντιγράφου εισπράχθηκαν ευρώ (36,00). Επί των εισπραχθέντων δικαιωμάτων, εισπράχθηκε Φ.Π.Α. ευρώ (8,64). Το πληρεξούσιο αυτό διάβασα καθαρά και μεγαλόφωνα, για να το ακούσει η εκπρόσωπος της εντολέως, η οποία βεβαίωσε ολόκληρο το περιεχόμενό του και το υπέγραψε, καθώς και εγώ η συμβολαιογράφος, όπως ο νόμος ορίζει.

Η ΕΚΠΡΟΣΩΠΟΣ ΤΗΣ ΕΝΤΟΛΕΩΣ Η ΣΥΜΒΟΛΑΙΟΓΡΑΦΟΣ

ΑΚΟΛΟΥΘΟΥΝ ΥΠΟΓΡΑΦΕΣ

Η ΣΥΜΒΟΛΑΙΟΓΡΑΦΟΣ
(Τ.Σ.) Αικατερίνη Δ. Βασιλείου
Ακριβές αντίγραφο - Λήξιος αυθημερόν
Η Συμβολαιογράφος Λαρίσας

03/12/18

AIKATERINI D. VASILEIOU
NOTARKA
(kontakt detalji)

KOPIJA

BROJ 290

PUNOMOĆJE

U gradu Larisa, u srijedu 5. septembra 2018. godine, u mojoj kancelariji smještenoj u zgradi na trećem spratu ulice Kouma, kod mene, notarke u Larisi **AIKATERINI VASILEIOU**, kćerke Dimitriosa i Valentini, sa rezidencijom u Larisi, PIB 047010021 područna jedinica Larisa, pojavila se dolje pomenuta, poreska obveznica, **Vasiliki Karkania, od Apostolosa i Stamatije**, PIB 128996162, područna jedinica Larisa, inženjerka hemije, rođena u Larisi 15.3.1985, gdje boravi u Ulici Farmaka br. 3, sa ličnom kartom br. AK407175/11-11-2011 izdatom u Larisi, koja je trenutno direktorica i predstavnica anonimnog društva pod nazivom „KARKANIAS ENVIRONMENTAL TECHNOLOGY S.A.“, poznatog kao „KARKANIAS“, sa sjedištem u industrijskoj zoni Larise, PIB 095244711, područna jedinica Larisa, sa CRPS brojem: 026564640000. Ova kompanija je osnovana ugovorom br. 21.180/10-04-2001 notarke Larise Eleni – Evgenia Romosiou – Kleitsaki, ubilježena je u Registar anonimnih društava 21.4.2001, pod brojem 48779/31/B/01/12, odobrena licencom broj K 1009/12-4-2001 pod upravom prefekta Larise, dok su sažetak memoranduma, registracija odobrenja i licenca objavljeni u Sl. listu broj 2.393/30-04-2001 (poglavlje: AD i DOO), čije kopije su u prilogu ovog akta. Nakon što su izvršene izmjene gore pomenutog memoranduma, na osnovu propisa koji su na snazi, zavedene su u Registar privrednih subjekata, čija kopija sa brojem protokola 350511.495898 je data u prilogu ovog akta. Posljednji Upravni odbor, koji upravlja gore pomenutom kompanijom, izabran je sa petogodišnjim mandatom, a izabrala ga je Generalna skupština akcionara od 14.12.2016. i konstituisan je uz zapisnik Upravnog odbora od 14.12.2016, a zapisnik je zaveden u CRPS servis centar pod šifrom 861643, kao što potvrđuje objava sa br. prot. 727949/20-12-2016 pomenutog servisnog centra, što je u prilogu ovog akta, i do danas nije dalje mijenjan, niti raspušten, ili stavljen pod stečaj ili likvidaciju, kao što odgovorno izjavljuje gore imenovana predstavnica kompanije. Osoba koja se ovdje pojavljuje, ovlašćena je od strane Upravnog odbora gore pomenute kompanije da potpiše ovaj akt uz zapisnik Upravnog odbora br. 1068/04-09-2018, čija je kopija u prilogu ovog akta. Osoba koja se ovdje pominje me zamolila da sačinim ovaj akt, u kom izjavljuje da je kompanija koju predstavlja, odnosno anonimno društvo sa sjedištem u opštini Tempi (industrijska zona Larise), anonimno društvo pod imenom „KARKANIAS ENVIRONMENTAL TECHNOLOGY S.A.“, da bi učestvovala na tenderu za dobijanje posla pod punim nazivom: Danilovgradska opštinska infrastruktura – izgradnja postrojenja za otpadne vode, tenderski broj EBRD ME DAN 9000, u Crnoj Gori (Danilovgradska opštinska infrastruktura – izgradnja postrojenja za otpadne vode, tenederski broj EBRD ME DAN

03/12/18

9000), koji se odvija u ulici Čaja Šćepanovića bb Danilovgrad, 81410, Crna Gora, 13. septembra 2018. ili bilo kog drugog datuma u slučaju odlaganja, i imenuje i postavlja svog specijalnog pravnog zastupnika, predstavnika i zajmoprimca: 1) Georgios Karkanias od Apostola i Stamatije, rođen 3.8.1983. u Larisi, Grčka, gdje boravi u ulici Farmaki, vlasnik pasoša Republike Grčke br. AK5153599, i 2) Aristeidis Oikonomou od Dimitriosa i Panagiote, rođen 22.9. 1969. u Larisi – Grčka, gdje boravi u Tersiptea Larisi, vlasnik pasoša br. C5HTVTZHF/09-06-2009 Republike Njemačke, i 3) Vasileios Margaritis od Aleksandrosa i Pinelopi, rođen 14.6.1985. u Larisi – Grčka, gdje boravi u ulici Aristeidou, vlasnik pasoša Republike Grčke br. AK4571542, **kojima se daje poseban nalog i punomoćje, bilo da rade zajedno ili odvojeno, u njeno ime (kompanija „KARKANIAS ENVIRONMENTAL TECHNOLOGY S.A.") i za njen račun** da predaju tendersku dokumentaciju, pred tenderskom komisijom za obavljanje gore navedenog posla i daje im ovlašćenje da potpišu i predaju svaki odgovarajući dokument tokom cijelog tenderskog procesa. Gore pomenuta predstavnica kompanije „KARKANIAS ENVIRONMENTAL TECHNOLOGY S.A.", u funkciji navedenoj u ovom aktu, takođe odgovorno izjavljuje da su, prema odredbama zakona 1599/1986, rezidencija navedena na početku ovog akta i navedeno sjedište kompanije stvarni, legalni i autentični, i da kompanija nije raspuštena, niti stavljena pod stečaj ili likvidaciju. Osoba koja se pojavila, u funkciji navedenoj u ovom aktu, izjavljuje da od sada odobrava i priznaje sve radnje gore navedenih predstavnika, koje se odnose na gore navedena zaduženja, kao legalne, valjane, snažne i neosporne i pravno obavezujuće za kompaniju koju predstavljajuju i da je ovo punomoćje validno dok se ne oduzme i dok njegovo oduzimanje ne bude zakonski objavljeno.
Ovo punomoćje sastavljeno je u dva primjerka u prisustvu svjedoka. Stavljen je „megarosimo" pečat za original po cijeni od 1 eura, a 2 eura za kopiju. Za prava ovog akta, kao i za prava traženja kopije, sakupljeno je 36 eura, od čega PDV od 8,64 eura. Pročitala sam ovo punomoćje glasno pred predstavnicom direktora, koja je odobrila njegov sadržaj i potpisala ga, kao i ja u ulozi notarke, kako je predviđeno zakonom.

NOTAR PREDSTAVNICE DIREKTORA

POTPIS (potpis, pečat)

Prevod grčkog originala datog u prilogu

Larisa 7.9.2018.

Zvanični prevodilac
Sokratis Kyriazis

MREŽA PREVODILAČKIH CENTARA
ERMINIA
SOKRATIS KYRIAZIS
TEL. & FAX 2410626055
PDV 045564280

03/12/18

ΤΡΑΠΕΖΑ ΠΕΙΡΑΙΩΣ

No 573890

ΕΓΓΥΗΤΙΚΗ ΕΠΙΣΤΟΛΗ
LETTER OF GUARANTEE

PIRAEUS BANK S.A.
AGIOU GEORGIOU BRANCH, LARISSA (2614)

DATE: 28/08/2018

To:
D.O.O. 'VODOVOD I KANALIZACIJA' DANILOVGRAD
CAJA SCEPANOVICA BB
81 410 DANILOVGRAD
STATE OF MONTENEGRO

Guarantee No. 917ILG1854141 for EUR 30.000,00 (EURO THIRTY THOUSAND ONLY)

Name of Contract: Danilovgrad Municipal Infrastructure - Construction of Wastewater Plan

WHEREAS, KARKANIAS ENVIRONMENTAL TECHNOLOGY S.A., VAT No. EL095244711, Industrial Area of Larissa, Greece, P.C. 41004, (hereinafter called "the tenderer") has submitted its Tender dated 13/09/2018 (date of tender) for the performance of the above-named Contract (hereinafter called "the Tender"), with No. EBRD ME DAN 9000 issued on 15/06/2017.

KNOW ALL PERSONS by these presents that WE PIRAEUS BANK S.A., AGIOU GEORGIOU BRANCH, LARISSA (2614), 1ST KM OLD NATIONAL ROAD LARISSA - ATHENS, 41335 LARISSA, GREECE, (hereinafter called "the Bank"), are bound unto D.O.O. 'VODOVOD I KANALIZACIJA' DANILOVGRAD, CAJA SCEPANOVICA BB, 81410 DANILOVGRAD, SATE OF MONTENEGRO (hereinafter called "the Employer") in the sum of EUR 30.000,00 (EURO THIRTY THOUSAND ONLY) for which payment well and truly to be made to the said Employer, the Bank binds itself, its successors and assigns by these presents.

Signed on behalf of the said Bank this 28/08/2018, (August 28, 2018).

THE CONDITIONS of this obligation are:

(1)If the tenderer withdraws its Tender during the period of tender validity specified by the tenderer in the Tender Form, or

(2)If the tenderer, having been notified of the acceptance of its Tender by the Employer during the period of tender validity:

(a)fails or refuses to sigh the Form of Contract Agreement when required, or

(b)fails or refuses to issue the Performance Security in accordance with the tender documents.

We undertake to pay to the Employer up to the above amount upon receipt of his first written demand.

This guarantee will remain in full force up to and including the date twenty-eight (28) days after the period of tender validity and any demand in respect thereof must reach the Bank not later than the above date, thus no later than 28/02/2019.

Yours Faithfully,
PIRAEUS BANK S.A.
AGIOU GEORGIOU BRANCH, LARISSA (2614)
1ST KM OLD NATIONAL ROAD LARISSA ATHENS
41335 LARISSA GREECE

Konstantia T. Zervoudi

Apostolos Dim. Kameas

300224/15M/10-16

03/12/18

03/12/18

ΕΓΓΥΗΤΙΚΗ ΕΠΙΣΤΟΛΗ Br. 57380

GARANTNO PISMO

PIRAEUS BANK S.A.
AGIOU GEORGIOU BRANCH, LARISSA (2614)
DATUM: 28. 08. 2018. god.
Za:
D.O.O "VIDOVOD I KANALIZACIJA" DANILOVGRAD
CAJA ŠĆEPANOVIĆA BB
81 410 DANILOVGRAD
CRNA GORA
Garancija br. 917ILG1854141 za iznos od 30.000, 00 (TRIDESET HILJADA EURA ISKLJUČIVO)
Naziv Ugovora: Opštinska infrastruktura Danilovgrada – Izgradanja uređaja za prečišćavanje otpadnih voda
S OBZIROM DA JE, KARKANIAS ENVIRONMENTAL TEHNOLOGY S.A., PIB br. EL095244711, Industriska oblast Larise, Grčka, P.C. 41004, (u daljem tekstu "Ponuđač") predao svoju Ponudu dana 13. 09. 2018. godine (datum ponude) za izvođenje u prethodnom tekstu pomenutog Ugovora (u daljem tekstu "Tender"), sa br. EBRD ME DAN 9000 od dana 15. 06. 2018. godine.
Ovim dokumentom stavlja se na znanje da mi PIRAEUS BANK S.A. AGIOU GEORGIOU BRANCH, LARISSA (2614), 1ST KM OLD NATIONAL ROAD LARISS ATHENS, 41335 LARISSA GREECE, (u daljem tekstu " Banka"), obavezujemo se firmi D.O.O "VIDOVOD I KANALIZACIJA" DANILOVGRAD CAJA ŠĆEPANOVIĆA BB 81 410 DANILOVGRAD CRNA GORA (u daljem tekstu " Poslodavac") za isnos od 30.000, 00 (TRIDESET HILJADA EURA ISKLJUČIVO) u kojem će biti izvršena isplata navedenom Poslodavcu, Banka obavezuje sebe, svoje nasljednike putem ovdje potpisanih lica.
Dokument je potpisan u ime Banke 28. 08. 2018. god. (28. avgust 2018).
USLOVi koji važe za ovu obavezu su sljedeći:
(1) Ukoliko Ponuđač povuče svoju ponudu tokom perioda trajanja ponude koji je naveden od strane Ponuđača u Tenderskom obrascu, ili
(2) Ukoliko Ponuđač, nakon što dobije obavještenje od srane Poslodavca da je njegova ponuda prihvaćena tokom trajanja tendera:
(a) ne potpiše ili odbije da potpiše Obrazac Ugovora kad to bude od njega traženo, ili
(b) ne izda ili odbije da izda Obezbjeđenje radova u skladu sa tenderskom dokumentacijom.
Obavezujemo se da Poslodavcu isplatimo sumu do iznosa navedenog u prethodnom tekstu nakon prijema njegovog prvog pisanog zahtjeva.
Ova garancija je na snazi do dvadeset osam (28) dana, uključujući i dvadeset osmi dan, nakon isteka valjanosti tenderske ponude i svaki zahtjev koji se odnosi na pomenutu ponudu Banka mora primiti najkasnije do prethodno pomenutog datuma, što znači do 28. 02. 2019. godine.

Srdačan pozdrav.
PIRAEUS BANK S.A.
AGIOU GEORGIOU BRANCH, LARISSA (2614)
1ST KM OLD NATIONAL ROAD LARISS ATHENS
41335 LARISSA GREECE

03/12/18

03/12/18

MEMORANDUM OF CLARIFICATION MEETING
CHANGES REQUIRED PURSUANT TO FIRST STAGE PROPOSAL EVALUATION

KARKANIAS ENVIRONMENTAL TECHNOLOGY S.A.

Procurement of Construction of Wastewater Plant for D.O.O. "Vodovod i kanalizacija" Danilovgrad, State of Montenegro, 8732-IFT-41252

These Changes Required Pursuant to First Stage Proposal Evaluation are issued in accordance with Para 20.1 of the Instruction to Tenderers of the Tender Documents for the above Contract.

The tenderer is expected to carefully examine the "Changes Required Pursuant to First Stage Proposal Evaluation".

Failure to furnish all information, change, correct or withdraw all the non-conformities identified by the Purchaser in the First Stage Proposal and listed in these "Changes Required Pursuant to First Stage Proposal Evaluation" will be at the tenderer's risk and will result in the rejection of its tender.

Ref. in First Stage Proposal	Description of Deviation	Ref. in Tender Documents	Changes Required Pursuant to First Stage Proposal Evaluation
			none

19.10.2017, In Danilovgrad

Authorised Signature:

.....

Name and Title of Signatory:

President of evaluation committee

Name of Purchaser:
DOO Vodovod i kanalizacija Danilovgrad

Authorised Signature:

.....

Name and Title of Signatory:

.....

Name of Tenderer:
Karkanias Environmental Technology S.A.

KARKANIAS ENVIRONMENTAL TECHNOLOGY S.A.
INDUSTRIAL AREA OF LARISA - GREECE
POSTAL CODE 41004, BOX 3053
TEL.: +30 2410 541386 - FAX: +30 2410 541354
Email: info@karkanias.gr
TAX NUMBER: 095244711
REGISTRATION NUMBER: 48779/31/B/01/12

03/12/18

GEORGIOS KARKANIAS
PRESIDENT

03/12/18

KARKANIAS
ENVIRONMENTAL TECHNOLOGY S.A.

Attach.5 - Updated Technical Tender

Please find Updated Technical Tender/ Proposal in Folders II, III and IV.

KARKANIAS ENVIRONMENTAL TECHNOLOGY S.A.
INDUSTRIAL AREA OF LARISA - GREECE
POSTAL CODE 41004, BOX 3083
TEL.: +30 2410 541386 - FAX: +30 2410 541354
Email: info@karkanias.gr
TAX NUMBER: 095244711
REGISTRATION NUMBER: 46779/31/B/01/12

GEORGIOS KARKANIAS
PRESIDENT

03/12/18

03/12/18

Date: 13-9-2018.

Name of Contract: Danilovgrad Municipal Infrastructure - Construction of Wastewater Plant
To: D.O.O. "Vodovod i kanalizacija" Danilovgrad, Caja Scepanovica bb, 81410 Danilovgrad, State of Montenegro

DECLARATION

Karkanias - Environmental Technology S.A. declares that the technical tender, which is attached to this Second Stage Tender has no changes compered to the technical tender, which was submitted by our company in the First Stage Tender.

KARKANIAS ENVIRONMENTAL TECHNOLOGY S.A.
INDUSTRIAL AREA OF LARISA - GREECE
POSTAL CODE 41004, BOX 3053
TEL.: +30 2410 541386 - FAX: +30 2410 541354
Email: info@karkanias.gr
TAX NUMBER: 095244711
REGISTRATION NUMBER: 48779/31/B/01/12

GEORGIOS KARKANIAS
PRESIDENT

IZJAVA

Karkanias - Tehnologija Zaštite Okoliša S.A. izjavljuje da tehnički natječaj, koji je priložen ovom drugom Natječaju nema nikakvih izmjena na tehničkoj ponudi koju je naša tvrtka dostavila u Prvoj Fazi Natječaja.

KARKANIAS ENVIRONMENTAL TECHNOLOGY S.A.
INDUSTRIAL AREA OF LARISA - GREECE
POSTAL CODE 41004, BOX 3053
TEL.: +30 2410 541386 - FAX: +30 2410 541354
Email: info@karkanias.gr
TAX NUMBER: 095244711
REGISTRATION NUMBER: 48779/31/B/01/12

GEORGIOS KARKANIAS
PRESIDENT

03/12/18

03/12/18

Form FIN - 4: Current Contract Commitments / Works in Progress

Tenderers and each partner to a JVCA should provide information on their current commitments on all contracts that have been awarded, or for which a letter of intent or acceptance has been received, or for contracts approaching completion, but for which an unqualified, full completion certificate has yet to be issued.

Obrazac FIN - 4: Trenutne ugovorne obaveze / Radovi u toku

Učesnici na tenderu i svaki od partnera JVCA dostavlja informaciju o trenutnim obavezama u vezi svih ugovora koji su im dodijeljeni, kao i onih za koje su primili pismo o namjeri odnosno prihvatanju, i za ugovore koju su u završnoj fazi, ali za koje treba da se izda potvrda o prijemu cjelokupnih radova.

No. Br.	Name of Contract Naziv ugovora	Iii. Employer's Contact Address/ tel/Fax Kontakt adresa/tel/faks poslodavca	Value of Outstanding Work (Current EURO Equivalent) Vrijednost radova (trenutna vrijednost u EUR)	Estimated Completion Date Procijenjeni datum završetka	Average Monthly Invoicing Over Last Six Months (EURO/month) Prosječan mjesečni fakturisani iznos tokom posljednjih šest mjeseci (EUR/mjesec)
1	IMPLEMENTATION OF FINAL DESIGN FOR THE OPERATION OF BIOLOGIKAL TREATMENT PLANT OF ATALANTI IMPLEMENTACIJA FINALNOG DIZAJNA UREĐAJA ZA BIOLOŠKI TRETMAN U ATALANTI	MUNICIPALITY OF LOKRON – Square of Ag. ATALANTI tel: (0030) 22330 81003 fax: (0030) 22330 22606 OPŠTINA LOKRON – Trg Ag. ATALANTI tel: (0030) 22330 81003 fax: (0030) 22330 22606	280.111,98	11/2018	16.490,65€

GEORGIOS KARKANIAS
PRESIDENT

03/12/18

DANILOVGRAD MUNICIPAL INFRASTRUCTURE
CONSTRUCTION OF WASTEWATER PLANT

OPŠTINSKA INFRASTRUKTURA DANILOVGRADA
IZGRADNJA UREĐAJA ZA PREČIŠĆAVANJE OTPADNIH VODA

No. Br.	Name of Contract Naziv ugovora	Iii. Employer's Contact Address/ tel/Fax Kontakt adresa/tel/faks poslodavca	Value of Outstanding Work (Current EURO Equivalent) Vrijednost radova (trenutna vrijednost u EUR)	Estimated Completion Date Procijenjeni datum završetka	Average Monthly Invoicing Over Last Six Months (EURO/month) Prosječan mjesečni fakturisani iznos tokom posljednjih šest mjeseci (EUR/mjesec)
2	LANDFILL EXTENSION OF THE ISLAND OF KOS PROŠIRENJE DEPONIJE NA OSTRVU KOS	MUNICIPALITY OF KOS TECHNICAL SERVICES Skevou Zervou 40str. tel: (0030) 22423 61501 fax: (0030) 22420 26362 OPŠTINA KOS TEHNIČKE USLUGE Skevou Zervou 40str. tel: (0030) 22423 61501 fax: (0030) 22420 26362	1.602.623,08€	2/2019	0,00€
3	REHABILITATION OF TREBINJE WASTEWATER TREATMENT PLANT REHABILITACIJA UREĐAJA ZA PREČIŠĆAVANJE OTPADNIH VODA U TREBINJU	CITY OF TREBINJE, VUKA KARADZICA 2 89101, TREBINJE BIH tel: +38759273460 fax: *38759260742 GRAD TREBINJE, VUKA KARADZICA 2 89101, TREBINJE BIH tel: +38759273460 fax: *38759260742	1.665.773,86€	11/2018	0,00€

GEORGIOS KARKANIAS
PRESIDENT

03/12/18

Attach.7 – Conformity of Facilities

There aren't additional or varied Facilities that be supplied and installed by the tenderer, according to Memorandum of the clarification meeting.

KARKANIAS ENVIRONMENTAL TECHNOLOGY S.A.
INDUSTRIAL AREA OF LARISA - GREECE
POSTAL CODE 41004, BOX 3053
TEL.: +30 2410 541386 - FAX: +30 2410 541354
Email: info@karkanias.gr
TAX NUMBER: 095244711
REGISTRATION NUMBER: 8779/31/B/01/12

GEORGIOS KARKANIAS
PRESIDENT

03/12/18

Priložiti.7 - Sukladnost Objekata

Nema dodatnih ili raznovrsnih sadržaja koje će ponuditelj isporučiti i instalirati, sukladno Memorandumu sastanka za razjašnjenje.

KARKANIAS ENVIRONMENTAL TECHNOLOGY S.A.
INDUSTRIAL AREA OF LARISA - GREECE
POSTAL CODE 41004, BOX 3053
TEL.: +30 2410 541356 - FAX: +30 2410 541354
Email: info@karkanias.gr
TAX NUMBER: 095244211
REGISTRATION NUMBER: 48779/01/B/01/12

GEORGIOS KARKANIAS
PRESIDENT

03/12/18

Attach.8 – Subcontractors Proposed by the Tenderer

Not applicable

KARKANIAS ENVIRONMENTAL TECHNOLOGY S.A.
INDUSTRIAL AREA OF LARISA - GREECE
POSTAL CODE 41004, BOX 3053
TEL.: +30 2410 541388 - FAX: +30 2410 541354
Email: info@karkanias.gr
TAX NUMBER: 095244711
REGISTRATION NUMBER: 48779/31/B/01/12

GEORGIOS KARKANIAS
PRESIDENT

03/12/18

Priložiti.8 - Podizvođači koji predlaže Ponuditelj

Nije primjenjivo

KARKANIAS ENVIRONMENTAL TECHNOLOGY S.A.
INDUSTRIAL AREA OF LARISA - GREECE
POSTAL CODE 41004, BOX 3053
TEL.: +30 2410 541356 - FAX: +30 2410 541354
Email: info@karkanias.gr
TAX NUMBER: 095244711
REGISTRATION NUMBER: 48779/31/B/01/17

GEORGIOS KARKANIAS
PRESIDENT

03/12/18

KARKANIAS
ENVIRONMENTAL TECHNOLOGY S.A.

Attach.9 – Other documentation and information

Not applicable

KARKANIAS ENVIRONMENTAL TECHNOLOGY S.A.
INDUSTRIAL AREA OF LARISA - GREECE
POSTAL CODE 41004, BOX 3053
TEL.: +30 2410 541386 - FAX: +30 2410 541354
Email: info@karkanias.gr
TAX NUMBER: 095244711
REGISTRATION NUMBER: 48779/31/B/01/12

GEORGIOS KARKANIAS
PRESIDENT

03/12/18

Priložiti.9 – Druge Dokumentacije I Inforamcije

Nije primjenjivo

KARKANIAS ENVIRONMENTAL TECHNOLOGY S.A.
INDUSTRIAL AREA OF LARISA - GREECE
POSTAL CODE 41004, BOX 3053
TEL.: +30 2410 541386 - FAX: +30 2410 541354
Email: info@karkanias.gr
TAX NUMBER: 095244711
REGISTRATION NUMBER: 48779/31/B/01/12
GEORGIOS KARKANIAS
PRESIDENT

03/12/18

KARKANIAS
ENVIRONMENTAL TECHNOLOGY S.A.

Folder II – TECHNICAL TENDER (UPDATED)

Folder II - TEHNIČKA PONUDA

Contents

Sadržaj

	Dokument	Section in Folder
	Description of the essential technical and performance characteristic of the facilities **Opis osnovnih tehničkih i izvođačkih karakteristika objekata**	**1**
	Analytical list with description of electromechanical equipment (ENGLISH and MNE VERSION) **Analitička lista sa opisom elektomehaničke opreme**	**2**
	Proposed facilities list **Ponuđena lista objekata**	**3**
	Process design **Projekat tehnologije procesa**	**4**
	Drawings **Crteži**	**5**

KARKANIAS ENVIRONMENTAL TECHNOLOGY S.A.
INDUSTRIAL AREA OF LARISA - GREECE
POSTAL CODE 41004, BOX 3068
TEL.: +30 2410 541366 - FAX: +30 2410 541354
Email: info@karkanias.gr
TAX NUMBER: 095244711
REGISTRATION NUMBER: 48779/31/B/01/12

3/12/18
GEORGIOS KARKANIAS
PRESIDENT

3/12/18

Technical Offer

Description of the essential technical and performance characteristic of the facilities

Tehnička ponuda

Opis osnovnih tehničkih i funkcionalnih karakteristika postrojenja

KARKANIAS ENVIRONMENTAL TECHNOLOGY S.A.
INDUSTRIAL AREA OF LARISA - GREECE
POSTAL CODE 41004, BOX 3053
TEL.: +30 2410 541386 - FAX: +30 2410 541354
Email: info@karkanias.gr
TAX NUMBER: 095244711
REGISTRATION NUMBER: 48779/31/B/01/12

3/12/18

GEORGIOS KARKANIAS
PRESIDENT

CONTENT

1. GENERAL INFORMATION 1
1.1 Basic information on the construction 1

1. OPŠTE INFORMACIJE 1
1.1 Osnovne informacije o izgradnji 1
1.2 Proposed scope of works and expected results 2
1.2 Predloženi obim radova i očekivani rezultati 2
1.2.1 Wastewater Production 2
1.2.1 Proizvodnja otpadnih voda 2
1.2.1.1 Wastewater Volume 3
1.2.1.1 Zapremina otpadnih voda 3
1.2.1.2 Raw Wastewater Quality 4
1.2.1.2 Kvalitet otpadnih voda 4
1.2.1.3 Treated Wastewater Quality 5
1.2.1.3 Kvalitet prečišćene otpadne vode 6

2. DETAILS OF ALL WORKS TO ACHIEVE COMPLETION 7
2.1 Technological part 7

2. DETALJI SVIH RADOVA KOJI SU POTREBNI ZA ZAVRŠETAK 8
2.1 Tehnološki dio 8
2.1.1 Wastewater Treatment Process 10
2.1.1 Proces pročišćavanja otpadnih voda 10
2.1.1.1 Structures on the sewer network 11
2.1.1.1 Strukture na kanalizacionoj mreži 11
2.1.1.2 Mechanical wastewater pretreatment unit 17
2.1.1.2 Mehaničko postrojenje za predtretman otpadnih voda 17
2.1.1.3 Biological treatment process 18
2.1.1.3 Proces biološkog prečišćavanja 18
2.1.1.4 Filtration unit 27
2.1.1.4 Jedinica za filtraciju 27
2.1.1.5 UV disinfection of outflow – Measuring effluent flume 28
2.1.1.5 UV dezinfekcija oticaja – mjerenje efluenta dovodnog kanala 29
2.1.1.6 Sludge Treatment Units 30
2.1.1.6 Jedinice za prečišćavanje mulja 30
2.1.1.7 Common requirements of WWTP 36
2.1.1.7 Opšti uslovi za PPOV 37
2.1.1.8 Blower house 40
2.1.1.8 Objekat za produvavanje 41
2.1.1.9 Operation building 42
2.1.1.9 Upravna zgrada 42
2.1.1.10 Garages 44
2.1.1.10 Garaže 44

3/12/18
GEORGIOS KARKANIAS
PRESIDENT

1. GENERAL INFORMATION

1.1 Basic information on the construction

The purpose of the "Danilovgrad Municipal Infrastructure Project, Construction of WWTP" project is to deal with the treatment of sewage through the construction of a new wastewater treatment plant.

This project is to be followed by the "Danilovgrad Municipal Infrastructure Project, Rehabilitation of sewerage" project dealing with the collection of sewage wastewaters in the town of Danilovgrad through the construction of a separate sanitary sewerage.

The main watercourse draining the Danilovgrad area is the Zeta river.

The implementation of the projects will ensure an improved water quality in the Zeta river into which wastewaters are drained at present without any adequate treatment process. The wastewater will be brought into the new WWTP. The projects concept is based on the intention to protect the watercourse maximally from being polluted.

The designed activity realization will form conditions for the infrastructure completion and will promote the development of the area concerned.

1. OPŠTE INFORMACIJE

1.1 Osnovne informacije o izgradnji

Namjera projekta "Opštinska infrastruktura Danilovgrada, izgradnja postrojenja za prečišćavanje otpadnih voda (PPOV)" je rješavanje problema kanalizacije kroz izgradnju postrojenja za prečišćavanje otpadnih voda.

Ovaj projekat treba da prati projekat "Opštinska infrastruktura Danilovgrada, Rehabilitacija kanalizacije" koji se odnosi na sakupljanje kanalizacionih otpadnih voda u gradu Danilovgradu kroz izgradnju odvojene sanitarne kanalizacije.

Glavni vodotok koji odvodi vode sa područja Danilovgrada je rijeka Zeta.

3/12/18

GEORGIOS KARKANIAS
PRESIDENT

Realizacija projekata obezbijediće poboljšani kvalitet vode u rijeci Zeti, u koju se trenutno odvode otpadne vode bez adekvatnog postupka obrade. Otpadna voda će biti dovedena u novi PPOV. Koncept projekata je zasnovan na namjeri da se vodotok maksimalno zaštiti od zagađenja.

Realizacija projektovane aktivnosti će uspostaviti uslove za završetak infrastrukture i promovisati razvoj dotične oblasti.

1.2 Proposed scope of works and expected results

The Contractor elaborates the documentation of the WWTP for the capacity of 12,000 PE with construction divided into two stages, and will realize the WWTP for the capacity of 6,000 PE with individual structures realized in a scope specified in relevant descriptions of these structures.

1.2 Predloženi obim radova i očekivani rezultati

Izvođač radova izrađuje dokumentaciju o PPOV-u za kapacitet od 12.000 PE sa izgradnjom podijeljenom u dvije faze i realizovaće PPOV za kapacitet od 6.000 PE sa pojedinačnim strukturama realizovanim u opsegu navedenim u relevantnim opisima ovih objekata.

1.2.1 Wastewater Production

The existing sewerage system will be partially replaced by sewers built as separate sewage system. Wastewater treatment plant is proposed for following capacity:

Stage 1 - design capacity	6 000 population equivalent
Stage 2 - distant future	12 000 population equivalent

A vast majority of the wastewater collected from Danilovgrad is formed by sewage water, produced mainly in households.

1.2.1 Proizvodnja otpadnih voda

Postojeći kanalizacioni sistem će biti djelimično zamijenjen kanalizacijom izgrađenom kao zasebni kanalizacioni sistem. Postrojenje za prečišćavanje otpadnih voda se predlaže za sljedeće kapacitete:

Faza 1 – projektovani kapacitet	6 000 ekvivalent stanovništva
Faza 2 - daleku budućnost	12 000 ekvivalent stanovništva

Ogromnu većinu otpadnih voda prikupljenih iz Danilovgrada čini kanalizacijona voda koja se uglavnom proizvodi u domaćinstvima.

3/12/18
GEORGIOS KARKANIAS
PRESIDENT

1.2.1.1 Wastewater Volume

The determination of the volume of wastewater is based on the expected wastewater production of 150 L/capita.day. The wastewater flow rates, specified by the client, include groundwater inflow/infiltration. Design parameters is found in the following table:

1.2.1.1 Zapremina otpadnih voda

Određivanje količine otpadnih voda zasnovano je na očekivanoj proizvodnji otpadnih voda od 150 L / po glavi stanovnika na dan. Stopa protoka otpadnih voda, koju odredi klijent, uključuje priliv / infiltraciju podzemnih voda. Parametri projekta nalaze se u sledećoj tabeli:

Table 1: Wastewater Production

Tabela 1: Proizvodnja otpadnih voda

	Design capacity Projektovani kapacitet		
	l/s	m^3/h	m^3/d
Average Dry Weather Daily Flow – ADF Prosječni dnevni protok tokom suvog vremena – ADF	10.4	37.4	898.6
Maximum Dry Weather Daily Flow – MDF Maksimalni dnevni protok tokom suvog vremena – MDF	14.6	52.6	1,261.4
Maximum Dry Weather Hourly Flow – MHF Maksimalni protok po satu tokom suvog vremena – MHF	21.9	78.8	-
Wet Weather Flow – WWF Protok tokom vlažnog vremena – WWF	26.3	94.6	-

All the design flow will be doubled for WWTP capacity of 12,000 PE.

Internal recycles will be less than 1% of WWF.

Svi projektovani protoci biće udvostručeni za kapacitet PPOV-a od 12.000 PE.

Unutrašnje recikliraže biće manje od 1% protoka otpadnih voda.

3/12/18

GEORGIOS KARKANIAS
PRESIDENT

1.2.1.2 Raw Wastewater Quality

The wastewater produced in the town of Danilovgrad has the characteristics of sewage water. The specification of its quality is therefore based on the Specific Contamination (SC), produced by the town's inhabitants, as summarized in Table 2.

1.2.1.2 Kvalitet sirove otpadne vode

Otpadna voda proizvedena u gradu Danilovgradu ima karakteristike kanalizacione vode. Specifikacija njenog kvaliteta stoga se zasniva na specifičnoj kontaminaciji (SC), koju proizvode stanovnici grada, kako je sažeto u Tabeli 2.

Table 2: Specific pollution per capita

Tabela 2: Specifično zagađenje po glavi stanovnika

BOD_5	60	g/capita.day
COD	120	g/capita.day
SS	70	g/capita.day
TNK	11	g/capita.day
P	1.8	g/capita.day

Table 3: Design capacity - average annual value

Tabela 3: Projektovani kapacitet – prosječna godišnja vrijednost

BOD_5	360	kg/day	400.6	mg/l
COD	720	kg/day	801.3	mg/l
SS	420	kg/day	467.4	mg/l
TNK	66	kg/day	73.5	mg/l
P	10.8	kg/day	12.0	mg/l

All the design balance of pollution will be doubled for WWTP capacity of 12,000 PE.

At the time of startup of WWTP will be connected pollution from about 3,900 inhabitants. The amount of pollution and wastewater flow will be as follows (the amount of storm water flow is not changed).

Čitav projektni bilans zagađenja će se udvostručiti za kapacitet PPOV-a od 12.000 PE.

3/12/18
GEORGIOS KARKANIAS
PRESIDENT

U trenutku pokretanja prečišćenja otpadnih voda biće prikupljeno zagađenje od oko 3.900 stanovnika. Količina zagađenja i protoka otpadnih voda će biti sljedeća (količina protoka pribrežne vode se ne mijenja).

Table 4: Wastewater production- state at start up

Tabela 4: Proizvodnja otpadne vode – stanje na početku

	l/s	m^3/h	m^3/d
Average Dry Weather Daily Flow – ADF Prosječni dnevni protok tokom suvog vremena – ADF	6.8	24.3	584.1
Maximum Dry Weather Daily Flow – MDF Maksimalni dnevni protok tokom suvog vremena – MDF	9.5	34.2	819.9
Maximum Dry Weather Hourly Flow – MHF Maksimalni protok po satu tokom suvog vremena	14.2	51.2	-
Wet Weather Flow – WWF Protok tokom vlažnog vremena WWF	26.3	94.6	-

Expected minimum flow of waste water during startup will be about 4.1 l/s.

Očekivani minimalni protok otpadnih voda tokom startovanja će biti oko 4,1 l/s.

Table 5: Raw wastewater pollution - state at start up

Tabela 5: Zagađenje sirove otpadne vode – stanje na početku

BOD_5	234	kg/day	400.6	mg/l
COD	468	kg/day	801.3	mg/l
SS	273	kg/day	467.4	mg/l
TNK	42.9	kg/day	73.5	mg/l
P	7.02	kg/day	12.0	mg/l

1.2.1.3 Treated Wastewater Quality

River Zeta is recipient of treated wastewater. The river is located in sensitive area. Wastewater treatment process includes nutrient removal therefore. According the Law on Classification and Categoration of Surface and Ground water of Montenegro (in force since 1996) river Zeta water is classified along whole watercourse to the classes A1, S. I. Class A1 water can be used in its' natural state after disinfection for

3/12/18
GEORGIOS KARKANIAS
PRESIDENT

drinking purposes. Class S water can be used for fish breeding and class I designate water suitable for contact recreation (bathing). In line with EU Directives secondary and tertiary treatment at WWTP Danilovgrad will achieve the following effluent quality:

1.2.1.3 Kvalitet prečišćene otpadne vode

Rijeka Zeta je recipijent prečišćenih otpadnih voda. Rijeka se nalazi na osjetljivom području. Proces prečišćavanja otpadnih voda uključuje uklanjanje nutrijenata. Prema Zakonu o klasifikaciji i kategorizaciji površinskih i podzemnih voda Crne Gore (koji je na snazi od 1996. godine) rijeka Zeta se klasifikuje po cjelokupnom vodotoku na klase A1. S. I. Voda klase A1 se može koristiti za piće u svom prirodnom stanju nakon dezinfekcije. Voda klase S može se koristiti za uzgoj riba a klasa I označava vodu pogodnu za rekreaciju (kupanje). U skladu sa direktivama EU sekundarni i tercijarni tretman na PPOV-u Danilovgrad će postići sljedeći kvalitet otpadnih voda:

Table 6: Effluent quality requirements

Tabela 6: Zahtjevi u pogledu kvalitet efluenta

Parameter		
BOD_5	25	mg/l
COD	125	mg/l
SS	35	mg/l
Total Nitrogen (annual average value) Ukupna količina azota (prosječna godišnja vrijednost)	15	mg/l
Total Phosphorous (annual average value) Ukupna količna fosfora (prosječna godišnja vrijednost)	2	mg/l

UV disinfection of effluent is required in order to ensure the quality of receiving water (Zeta River) as a drinking water class A1.

UV dezinfekcija efluenta je neophodna kako bi se osigurao kvalitet prijema vode (rijeka Zeta) kao klasa A1 vode za piće.

3/12/18
GEORGIOS KARKANIAS
PRESIDENT

2. DETAILS OF ALL WORKS TO ACHIEVE COMPLETION

2.1 Technological part

The Works will comprise designing, construction and commissioning of the WWTP Danilovgrad, tertiary treatment and sludge management. The WWTP Danilovgrad is designed for a capacity of 12000 PE and shall be built for 6,000PE in the Stage 1.

The design of the WWTP spatial arrangement had taken into consideration the territorial (areal) reserve for the future extension of the WWTP for the capacity of 18,000 PE (Stage 3).

The WWTP is designed as unattended with fully automatic operation.

List of buildings and facilities - for the design and erection of all necessary works

- Connection on the inlet main collector for the capacity of 130 l/s on the site of the WWTP
- Facility for the coarse screen for the capacity of 130 l/s,
- Facility for the inlet pumping station for the capacity of min26,3 l/s,
- Facility for the fine screen, grease and grit chamber (compact mechanical pretreatment unit) for the capacity of min26,3 l/s,
- Connection between the compact mechanical pretreatment unit and the biological unit for capacity of min26,3 l/s,
- Biological unit for the capacity of 6,000 PE,
- Discharge pipeline from the secondary settling tank to the filtration unit for the capacity of min26,3 l/s
- Shaft and facility for the service water preparation
- Filtration of treated wastewater
- Disinfection of treated wastewater
- Effluent measuring channel for the quality of treated wastewater and capacity of min26,3 l/s
- Return sludge and Excess sludge pumping station for 6,000 PE,
- Facility for sludge thickening for 6,000 PE,
- Sludge storage (holding) tank for 6,000 PE,
- Facility for sludge dewatering for 6,000 PE,
- Facility for septic sludge (septage) delivered by trucks, receiving tank
- Administration building with laboratory, workshop and garage,
- Internal sewage system with sewage and internal recycles from sludge treatment,

3/12/18
GEORGIOS KARKANIAS
PRESIDENT

- Rainwater will be introduced into the drainage
- Transformer station for the WWTP capacity 12,000 PE,
- Power generator for 6,000 PE.

- Landscaping works
- Access road
- Construction related to utilities connections (electric power and water supply and others).
- Trial operation of the WWTP in duration of 365 days.
- Sludge disposal in the Trial operation period will be done by Employer.
- Obtainment of an Operation permit including all the required consents and documentation (such as: expert report on explosion safety, summary of fire safety procedures, production of project of maintenance of facility).
- Training of the WWTP staff.

The scope of Works also covers delivery of Plant, test on Completion including operational trials, Tests after Completion, remedying of any defects in the Works and training of future (Employer's) End Recipient's WWTP staff. All activities necessary to be performed in order to put the Works into normal operation and to deliver them to the Employer shall also be carried out. The Conditions of Contract, Price Schedule, such as included in this Tender Dossier, shall be read in conjunction with the Employer's requirements. Matters referred to, shown or described in any of the formers are not necessarily repeated in the latter.

2. DETALJI SVIH RADOVA KOJI SU POTREBNI ZA ZAVRŠETAK

2.1 Tehnološki dio

Radovi će obuhvatati projektovanje, izgradnju i puštanje u rad PPOV-a Danilovgrad, tercijarni tretman i upravljanje muljem. PPOV Danilovgrad je projektovan za kapacitet od 12000 PE i biće izgrađen za 6.000PE u Fazi 1.

Projekat prostornog uređenja PPOV-a uzeo je u obzir teritorijalnu (prostornu) rezervu za buduće proširenje PPOV-a za kapacitet od 18.000 PE (faza 3).

PPOV je projektovan kao postrojenje bez nadzora sa potpuno automatskim radom.

Spisak zgrada i objekata - za projektovanje i montažu svih potrebnih radova.

3/12/18
GEORGIOS KARKANIAS
PRESIDENT

- Priključak za ulaz glavnog kolektora za kapacitet od 130 l / s na lokaciji PPOV-a
- Postrojenje za grubo prosijavanje za kapacitet od 130 l / s,
- Postrojenje za ulaz pumpne stanice za kapacitet od 26,3 l / s,
- Postrojenje za fino prosijavanje, mast i komora za pjeskarenje (kompaktni uređaj za mehanički predtretman) za kapacitet min26,3 l / s,
- Spoj između kompaktnog uređaja za mehanički predtretman i biološki uređaj za kapacitet min 26,3 l / s,
- Biološki uređaj za kapacitet 6000 PE,
- Ispusna cijev iz sekundarnog bazena za taloženje do uređaja za filtraciju za kapacitet min 26,3 l / s
- Okno i postrojenje za pripremu servisne vode
- Filtriranje prečišćenje otpadne vode
- Dezinfekcija prečišćenih otpadnih voda
- Mjerni kanal izlaznih voda (efluenta) za kvalitet prečišćenih otpadnih voda i kapacitet od min 26,3 l / s
- Pumpna stanica za povratni mulj i višak mulja za 6.000 PE
- Postrojenje za ugušćivanje mulja za 6.000 PE,
- Bazen za odlaganje mulja za 6.000 PE,
- Postrojenje za dehidatraciju mulja za 6.000 PE
- Postrojenje za septički mulj (septik) dopremljen kamionima, prijemni bazen
- Upravna zgrada sa laboratorijom, radionicom i garažom,
- Interni kanalizacijski sistem sa kanalizacijom i unutrašnjim recikliranjem tretiranog mulja,
- Kišnica će ući u sistem za odvodnjavanje
- Trafostanica za PPOV kapaciteta 12.000 PE,
- Agregat za 6.000 PE.

3/12/18

GEORGIOS KARKANIAS
PRESIDENT

- Radovi na ozelenjavanju
- Pristupni put
- Konstrukcija koja se odnosi na komunalne priključke (snabdijevanje električnom energijom i vodom i ostalo).
- Probni rad PPOV-a u trajanju od 365 dana.
- Odlaganje mulja u periodu probnog rada izvršiće Investitor.
- Pribavljanje operativne dozvole uključujući sve neophodne saglasnosti i dokumentaciju (kao što su: izveštaj eksperta o bezbjednosti od eksplozije, pregled procedura zaštite od požara, izrada projekta o održavanju objekta).
- Obuka osoblja PPOV-a.

Obim radova obuhvata i isporuku postrojenja, testiranje pri završetku, uključujući operativna ispitivanja, testove nakon završetka, otklanjanje bilo kakvih nedostataka u radovima i obuku budućeg Investitorovog osoblja i osoblja PPOV-a. Takođe, obavljaju se sve aktivnosti koje su neophodne da bi se obezbijedilo normalno funkcionisanje i radovi predali Investitoru. Uslovi ugovora, cjenovnik, kao što je uključeno u ovaj Tenderski dosije, treba da se pročitaju zajedno sa zahtjevima Investitora. Pomenuta pitanja, prikazana ili opisana u bilo kom od prethodnih nije neophodno ponavljati.

2.1.1 Wastewater Treatment Process

The design of the wastewater treatment plant for the town of Danilovgrad is based on the nitrification and denitrification treatment processes with chemical precipitation of phosphorus. Wastewater treatment technology is designed as circulating activated sludge process with pre-denitrification tank.

2.1.1 Proces pročišćavanja otpadnih voda

Projekat postrojenja za prečišćavanje otpadnih voda za grad Danilovgrad zasniva se na postupcima prečišćavanja nitrifikacijom i denitrifikacijom pomoću hemijske fosforne percipitacije. Tehnologija prečišćavanja otpadnih voda je projektovana kao cirkulacioni proces aktivnog mulja sa bazenom za denitrifikaciju.

3/12/18
GEORGIOS KARKANIAS
PRESIDENT

2.1.1.1 Structures on the sewer network

The hydraulic sewer capacity is about 130 l/s. The sewerage network contains the following constructions:

- connecting shaft with gravel traps and sewage overflow (inlet and overflow manhole)
- septage unit
- automatically cleaned coarse screen, sewage pumping station and sewage overflow

Gravel traps and coarse screen serve as mechanical protection of pumping station. Their hydraulic capacity is maximal sewer flow capacity. Storm water flow rate greater than 26.3 l/s overflowed from the overflow chamber into the river. Flow rate of 26.3 l/s is a maximal hydraulic capacity of WWTP.

2.1.1.1 Strukture na kanalizacionoj mreži

Kapacitet hidrauličke kanalizacije je oko 130 l / s. Kanalizaciona mreža sadrži sljedeće konstrukcije:

- priključnu šahtu sa šljunkolovom i prelivnom kanalizacijom (ulivna i prelivna šahta)
- septik
- automatski očišćeno grubo sito, kanalizaciona pumpna stanica i prelivna kanalizacija

Šljunkolov i grubo sito služe kao mehanička zaštita pumpne stanice. Njihov hidraulički kapacitet je maksimalan kapacitet protoka kanalizacije. Protok pribrežne vode veći od 26,3 l / s preliva se iz prelivne komore u rijeku. Protok od 26,3 l / s je maksimalni hidraulični kapacitet PPOV-a.

Connection to the main collector

Connection sewer system and wastewater treatment plant will be using connecting shafts. Trunk sewer ends in the object of overflow/relief and switching-off chambers in front of the wastewater treatment plant.

This object fulfills two basic functions:

- Control of inflowing quantity of wastewater for the value Qmax = 130 l/s. In the gate chamber a motorized penstock is fitted destined for controlling inflowing quantity of wastewater.
- This motorized penstock warrants inflow controlling and/or full closing the wastewater treatment plant inlet (in case of a heavy failure – e.g. electric power drop-out).

As for spatial arrangement of the inlet / overflow manhole this one is divided into four parts – to the inlet chamber, to the gravel traps chamber, to the overflow/relief chamber and to the penstock/closing chamber. Gravel traps is mechanical protection of equipment against rough substances heavier than water. Gravel and other rough impurities flowing in together with influent wastewater will be trapped there. Extraction of

3/12/18
GEORGIOS KARKANIAS
PRESIDENT

trapped material will be realized with the aid of a lifting device. Hydraulic capacity of gravel traps is 130 l/s. Overflow/relief chamber has been resolved as an overflow/relief chamber with a front over fall. Penstock/closing chamber is provided with a motorized penstock for controlling inflowing quantity of wastewater. Overflow wastewater is introduced by sewerage systems into the river. This system also creates a bypass sewer of WWTP.

The structure includes a scum diaphragm, in conjunction with overflow weir, to prevent coarse impurities, floating substances, oil substances and fats from entering the river.

Furthermore, it is foreseen an automatic station for receiving samples of untreated wastewater.

The structure includes a draining area of the containers. The container removal is carried out with a truck.

One flow measuring structure is designed to be installed. One measuring flume will be installed on the storm-water overflow behind the overflow chamber. Parshall measuring flume is used due to their reliability and a wide range of flow rate.

The structure is designed as an open, reinforced-concrete flume made of water-resistance concrete, in which the measuring profile will be installed.

Priključak na glavni kolektor

Za priključni kanalizacioni sistem i postrojenje za prečišćavanje otpadnih voda će se koristiti priključne šahte. Glavni kanal se završava u objektu prelivne/ispusne i prekidne komore ispred postrojenja za prečišćavanje otpadnih voda.

Ovaj objekat ispunjava dvije osnovne funkcije:

- Kontrola količine otpadne vode koja se uliva za vrijednost Qmax = 130 l / s. U zatvaračkoj komori je ugrađena motorizovana cijev za regulisanje protoka namijenjena kontroli količine otpadne vode koja se uliva.
- Ova motorizovana cijev garantuje kontrolu priliva i / ili potpuno zatvaranje ulaza postrojenja za prečišćavanje otpadnih voda (u slučaju velikog kvara- npr. nestanka električne energije).

Prostor za ulivnu / prelivnu šahtu, podijeljen je na četiri dijela - na ulaznu komoru, komoru za šljunkolov, prelivnu / ispusnu komoru i komoru za pritisak/zatvarajuću komoru. Šljunkolov je mehanička zaštita opreme od teških supstanci krupnijih od vode. Šljunak i druge grube čestice koje se ulivaju zajedno sa ulaznom otpadnim vodama biće tamo zadržane. Vađenje zadržanog materijala biće realizovano uz pomoć uređaja za

3/12/18
GEORGIOS KARKANIAS
PRESIDENT

podizanje. Hidraulični kapacitet šljunkolova je 130 l/s. Prelivna/ispusna komora je realizovana kao prelivna/ispusna komora sa prednjim padom. Komora za pritisak/zatvarajuća komora je opremljena sa motorizovanom cijevi za kontrolisanje količine protoka otpadne vode koja se uliva. Prečišćavanje otpadnih voda uvode kanalizacioni sistemi u rijeku. Ovaj sistem takođe stvara obilazni cjevovod PPOV-a.
Struktura obuhvata dijafragmu za skupljanje mulja, u kombinaciji sa prelivnim pregradom, kako bi se spriječilo ulazak grubih nečistoća, plutajuće materije, uljnih supstanci i masti u rijeku.
Pored toga, predviđena je automatska stanica za prijem uzoraka neprečišćene otpadne vode. Struktura uključuje oblast za odvodnjavanje spremnika. Uklanjanje spremnika vrši se kamionom.
Jedna mjerna struktura protoka je projektovana da bude instalirana. Jedan mjerni kanal će biti instaliran na prelivu prebrižne vode iza prelivne komore. Paršalov mjerni kanal se koristi zbog pouzdanosti i širokog opsega brzine protoka. Struktura je projektovana kao otvoreni armirani betonski kanal, od vodootpornog betona, u kojem će biti postavljen mjerni profil.

Receipt of content of cesspools and septic tanks

The structure serves for collecting septage from septic trucks collected from cesspools and septic tanks.

Analytically, inside the facility will be installed a gravel trap, a compact fine screen unit for septage receiving and a septic reception tank. The structure includes a water-resistant, covered reception (collection) tank of required capacity. The tank is filled only through an automatic station for receiving septage, appropriately equipped with a electromotor knife gate valve, a flow meter, a pH and temperature measurement probe and a conductivity meter on the inlet pipeline. The tank includes a submersible mixer for homogenizing the content, valve for discharging the tank content by gravity and ultrasonic level meter.

The contents of the septic reception tank are dosed via submersible pumps ahead of coarse screen. Dosage is blocked during storm water flow of wastewater.

Furthermore, it is foreseen an automatic station for receiving samples of septage.

The structure is designed with parameters sufficient also for the planned scope of Stage 2.

The automatic station for receiving septage and the automatic station for receiving samples of septage will be installed into an insulated and heated building.

Prijem sadržaja prihvatnih i septičkih jama

Struktura služi za sakupljanje otpada sa septičkih kamiona prikupljenog iz prihvatnih i septičkih jama.

3/12/18
GEORGIOS KARKANIAS
PRESIDENT

Analitički, u objektu će biti postavljen šljunkolov, kompaktno postrojenje za fino prosijavanje za prijem otpada i septička jama. Struktura obuhvata vodootporni, pokriveni spremnik za prijem (sakupljanje) potrebnog kapaciteta. Spremnik se popunjava samo preko automatske stanice za prijem otpada, odgovarajuće opremljene elektromotornim nožastim zasunskim ventilom, mjeračom protoka, sondom za merenje pH vrijednosti i temperature i uređajem za mjerenje provodljivosti na ulazu cjevovoda. Spremnik sadrži uronjenu mješalicu za homogenizaciju sadržaja, ventil za odvod sadržaja spremnika gravitacionim i ultrazvučnim mjeračem nivoa.

Sadržaj septičkog spremnika za prijem dozira se preko uronjenih pumpi ispred grubog sita. Doziranje se blokira u vrijeme bujice otpadnih voda.
Pored toga, predviđena je stanica za automatski prijem uzoraka otpada.
Struktura je projektovana sa parametrima koji su takođe dovoljni za planirani obim faze 2.

Stanica za automatski prijem otpada i stanica za automatski prijem uzoraka otpada biće postavljene u izolovanoj i zagrijanoj zgradi.

Automatic coarse screen and pumping station

Automatic coarse screen is designed for 100 % storm water flow (130 l/s). Screenings from the automatic cleaned coarse screen fall into the screw conveyor and finally moved into the container. Ultrasonic differential level meter located ahead and behind of automatic screen controls screen operation. There is two lines, one with mechanically operated coarse screen with 50mm gaps and one with a standby manually operated coarse screen with 50mm gaps.

The structure includes a draining area of the container. The container removal is carried out with a truck.

The pumping station capacity and mechanical pre-treatment facility of WWTP is designed according to wastewater production rate.

The pumping station is resolved as a basement object designed for a slight equalizing of the sewage and for the pumping of the sewage through the mechanical pre-treatment into the biological part of the treatment plant. The pumping station will be equipped with submersible pumps. The number and the capacity of pumps are selected in order to achieve a uniform supply to the treatment plant. The pumps will be operated automatically in dependence on the water level in the pumping sump. Level inside of the pumping station is measured with the ultrasonic level meter. All pumps have frequency inverters for flow control. Pumping station maximal hydraulic capacity is 28.56 l/s for 1st stage. Storm water flow over 26.3 l/s overflows into the river from pumping station. On the pressure pipeline an electromagnetic inductive flow meter will be installed.

Pumping station is structurally designed for a wastewater flow corresponding of 12,000 PE flow (2nd stage). However the pumps will be mounted only on the flow rate max 28,56 l/s which correspond to rainfall flow rate of 6,000 PE.

The wastewater pumped shall be distributed to two separate lines for Stage 2.

3/12/18
GEORGIOS KARKANIAS
PRESIDENT

Further, the structure includes a scum diaphragm to prevent coarse impurities, floating substances, oil substances and fats from entering the river.

Internal recycles will be less than 1% of WWF.

Automatsko grubo sito i pumpna stanica

Automatsko grubo sito projektovano je za 100% protoka pribrežne vode (130 l / s). Krupni otpad iz sita sa automatskim čišćenjem upada u pužasti transporter i na kraju se premješta u spremnik. Ultrazvučni diferencijalni mjerač nivoa nalazi se ispred i iza automatskih komandi sita u operaciji prosijavanja. Postoje dvije linije, jedna sa grubim sitom kojim se upravlja mehanički sa razmakom od 50mm i jedna sa grubim sitom kojim se upravlja ručno sa razmakom od 50mm, na stend baju.
Struktura uključuje oblast za odvodnjavanje spremnika. Uklanjanje spremnika vrši se kamionom.

Kapacitet pumpne stanice i mehaničko postrojenje za predtretman PPOV-a projektovani su su prema stepenu proizvodnje otpadnih voda.
Pumpna stanica je realizovana kao podrumski objekat koji je projektovan za blago izjednačavanje kanalizacije i za pumpanje kanalizacije kroz mehanički predtretman u biološki dio postrojenja za prečišćavanje. Pumpna stanica će biti opremljena uronjenim pumpama. Broj i kapacitet pumpi su biraju tako da bi se postiglo jedinstveno snabdijevanje u postrojenju za prečišćavanje. Pumpama će se upravljati automatski u zavisnosti od nivoa vode u pumpi. Nivo unutrašnje pumpe se mjeri pomoću ultrazvučnog mjerača nivoa. Sve pumpe imaju frekventne pretvarače za kontrolu protoka. Maksimalni hidraulični kapacitet pumpe je 28,56 l / s za prvu fazu. Pribrežna voda čiji protok prelazi 26,3 l / s preliva se u rijeku sa pumpne stanice. Na potisnom cjevovodu će se instalirati elektromagnetni induktivni mjerač protoka.

Pumpna stanica je strukturno projektovana za protok otpadnih voda koji odgovara protoku od 12.000 PE (druga faza). Međutim, pumpe će se montirati samo na protok maks. 28,56 l / s, što odgovara opsegu brzine protoka kišnice od 6.000 PE.

Ispumpana otpadna voda će se distribuirati na dvije odvojene linije za fazu 2.

Pored toga, struktura uključuje dijafragmu za skupljanje mulja kako bi se spriječio ulazak grubih nečistoća, plutajućih materija, uljnih supstanci i masti u rijeku.

Unutrašnje recikliraže biće manje od 1% protoka otpadnih voda.

3/12/18

GEORGIOS KARKANIAS
PRESIDENT

Table 7: Required pumping station capacity
Tabela 7: Traženi kapacitet pumpne stanice

	Start-up capacity Početni kapacitet	Design capacity Projektovani kapacitet
	l/s	l/s
Average Dry Weather Daily Flow – ADF Prosječni dnevni protok tokom suvog vremena - ADF	6.8	10.4
Maximum Dry Weather Daily Flow – MDF Maksimalni dnevni protok tokom suvog vremena - MDF	9.5	14.6
Maximum Dry Weather Hourly Flow – MHF Maksimalni protok po satu tokom suvog vremena	14.2	21.9
Wet Weather Flow – WWF Protok tokom vlažnog vremena WWF	26.3	26.3

Table 8: Technical data of pumping station (1st Stage)
Tehnički podaci pumpne stanice (Faza 1)

Parameter Parametar	Unit Jedinica	Value Vrijednost
Number of pumps (working + standby)) Broj pumpi (u funkciji + na stend baju)	Pcs	2+1
Operating range of the pump Radni opseg pumpe	%	50 – 100

3/12/18
GEORGIOS KARKANIAS
PRESIDENT

2.1.1.2 Mechanical wastewater pretreatment unit

Complete wastewater pre-treatment prevents operational problems, such as blockages, wear and silting.

A double-line arrangement of the structure is designed; one separate unit is installed within Stage 1 (6,000 PE). Another, identical, unit shall be installed within Stage 2. A compact mechanical pretreatment unit is designed for each line.

Complete compact mechanical pretreatment unit consists of fine screen with screenings treatment, grit separation and classification with aeration and separation and removal of fat and grease. Hydraulic capacity of the compact mechanical pretreatment unit is 30 l/s (maximum design capacity). Slot of screen is 6 mm. The screen will be equipped to press of screenings. Analytically, screenings will be collected and removed, together with fats by a conveyor with an integrated press. The sand trap will achieve the separation of sand from the wastewater. Organic impurities will be washed from trapped sand. The sand will be removed by a conveyor to a separate container. Air will be supplied by an integrated compressor. The unit operation will be fully automatic, with personnel required only for occasional emptying of the container. Trouble-free handling of the container is ensured. The containers removal shall be carried out with a truck.

The structure will include a valve on the bypass piping of compact mechanical pretreatment unit.

The structure is designed as a reinforced-concrete monolithic slab (foundation) made of water-resistant concrete. The hard-surface area for the containers will be made of concrete, drained to the internal sewage system.

2.1.1.2 Mehaničko postrojenje za predtretman otpadnih voda

Kompletan predtretman otpadnih voda sprečava operativne probleme, kao što su blokade, habanje i taloženje mulja.

Projektovan je dvostrani raspored strukture; Jedno odvojeno postrojenje je instalirano u okviru Faze 1 (6.000 PE). Drugo, identično, postrojenje će biti instalirano u okviru faze 2. Kompaktno mehaničko predtretmansko postrojenje je projektovano za svaku liniju.

Kompletno kompaktno mehaničko postrojenje za predtretman sastoji se od pročišćavanja krupnog otpada finim sitima, odvajanja šljunka i klasifikacija sa provjetravanjem i odvajanje i uklanjanje masti i ulja. Hidraulični kapacitet kompaktnog mehaničkog postrojenja za prečišćavanje je 30 l/s (maksimalni projektovani kapacitet). Prorez sita je 6 mm. Sito će biti opremljeno tako da odbija otpad. Analitički, krupni otpad će se sakupljati i ukloniti, zajedno s mastima, putem transportera sa integrisanom presom. Pjeskolov će omogućiti razdvajanje pijeska od otpadne vode. Organske nečistoće će se isprati iz nataloženog pijeska. Pijesak će biti uklonjen transporterom i biće prebačen u poseban bazen. Vazduh će biti snabdijeven integriranim kompresorom. Operacija postrojenja će biti potpuno automatska, a osoblje je potrebno samo za povremeno pražnjenje posude. Obezbijeđeno je lako rukovanje spremnikom bez poteškoća. Uklanjanje bazena će se izvršiti kamionom.

3/12/18
GEORGIOS KARKANIAS
PRESIDENT

Struktura će obuhvatiti ventil na obilazni cjevovod kompaktnog mehaničkog postrojenja za prečišćavanje.

Struktura je konstruisana kao armirana betonska monolitna ploča (temelj) izrađena od vodootpornog betona. Prostor čvrste površine za bazena biće izrađen od betona, dreniran u unutrašnji kanalizacijski sistem.

2.1.1.3 Biological treatment process

Wastewater from mechanical pre-treatment will be flowed into the biological step of WWTP. Wastewater treatment technology is designed as circulating activated sludge process.

This process is based on a biological principle as low-load activation with aerobic sludge stabilization. The activation tanks is divided into a predenitrification (anoxic) zone and circulating activated sludge process with anoxic and aeration zones.

In the predenitrification zone the raw sewage is mixed with recirculated sludge from the bottom of secondary sedimentation tank resulting in the formation of activated mixture. Submersion horizontal agitator is used for stirring the activated sludge in the predenitrification.

Circulated activated sludge tank is equipped with submerged agitators too. The nitrification sections will be aerated by fine-bubble aeration elements. From the nitrification sections the activation mixture flows into the secondary sedimentation tank.

2.1.1.3 Proces biološkog prečišćavanja

Otpadne vode iz mehaničkog predtretmana će biti sprovedene u dio za biološko pročišćavanje u okviru PPOV-a. Tehnologija prečišćavanja otpadnih voda je projektovana kao cirkulacioni proces prečišćenja aktivnog mulja. Ovaj proces se zasniva na biološkom principu aktivacije pod niskim opterećenjem sa aerobičnom stabilizacijom mulja. Aktivacioni bazeni su podijeljeni na zonu denitrifikacije (anoksična zona) i cirkulacioni proces prečišćenja aktivnog mulja sa anoksičnom i aeracijskom zonom.
U zoni denitrifikacije, sirova kanalizacija se miješa sa recirkuliranim muljem sa dna sekundarnog sedimentacionog bazena, što rezultira stvaranjem aktivine smješe. Uronjena horizontalna mješalica se koristi za miješanje aktivnog mulja u denitrifikaciji.

Cirkuacioni bazen za aktivni mulj je takođe opremljen uronjenim mješalicama. Odjeljci za nitrifikaciju će se provjetravati finim vazdušnim mjehurićima. Od nitrifikacionih odjeljaka aktivna mješavina prelazi u sekundarni sedimentacioni bazen.

Flow distribution Chamber I

Structure for equal distribution of wastewater to three separate lines of the biological treatment is designed. The wastewater is distributed by gravity, with overflow including adjustable overflow weir. The structure will include valve. Emergency bypass of the downstream tanks is provided as well.

3/12/18
GEORGIOS KARKANIAS
PRESIDENT

Komora raspodjele protoka I

Izrađena je struktura za jednaku distribuciju otpadnih voda na tri odvojene linije biološkog pročišćavanja. Otpadna voda se distribuira gravitacijom, sa prelivom uključujući podesivu prelivnu pregradu. Struktura će obuhvatiti ventil. Takođe je obezbijeđena obilaznica nizvodnih bazena u slučaju nužde.

Predenitrification tank

Predenitrification tank ensures denitrification of oxidized forms of nitrogen contained in the return sludge. Two separate, identical denitrification tanks is designed for Stage 2. One tank will be realized within Stage 1.

The predenitrification tank inlet are mechanically pre-treated wastewater and return sludge from the final settling tank. Predenitrification tank operates in anoxic conditions and is not aerated. It is only mechanically mixed. Minimal hydraulic contact time is higher than 1,9 hour during maximal flow rate and maximal flow of return sludge. An overflow crest is designed on the runoff, allowing even discharge of wastewater to the activated sludge tank.

Denitrifikacijski bazen

Denitrifikacijski bazen osigurava denitrifikaciju oksidovanih oblika azota sadržanih u povratnom mulju. Dva odvojena, identična bazena za denitrifikaciju su projektovana za fazu 2. Jedan bazen će se realizovati u fazi 1. U denitrifikacijski bazen ulazi mehanički predtretirana otpadna voda i povratni mulj iz taložnog bazena. Bazen za denitrifikaciju radi u anoksičnom stanju i nije provjetren. Samo je mehanički izmiješan. Minimalno vrijeme hidrauličnog kontakta je veće od 1,9 sati tokom maksimalnog opsega brzine proticanja i maksimalnog opsega brzine proticanja povratnog mulja. Prelivna kruna je projektovana na oticaju, što omogućava čak i ispuštanje otpadnih voda u bazen za aktivni mulj.

Circulating activated sludge tank

The circulating activated sludge tank is operated with the presence of oxic and anoxic zones. This type of aeration tank is very suitable for fluctuating wastewater pollution, respectively with gradually increasing quantities of wastewater pollution.

Two separate, identical circulating activated sludge tanks is designed for Stage 2. One tank will be realized within Stage 1.

The tank is mechanically stirred and aerated, and its construction allows the installation, operation, and maintenance of machinery required by the technology used and the manufacturer. The tank includes a denitrification section, stirred mechanically with submersible mixers, and a nitrification section, aerated with aeration elements (membrane diffusers). The shape of the tank and inner partition walls is adapted to the

3/12/18
GEORGIOS KARKANIAS
PRESIDENT

most favorable hydraulic water flow. A runoff manhole with an overflow weir is designed, allowing even discharge of the activated mixture to the final settling tank.

In any case the total sludge age is higher than 20 days.

Because of simultaneous precipitation of phosphorus, the chemical sludge production incorporated into activated sludge production.

Cirkulacioni bazen za aktivni mulj

Cirkulacioni bazen za aktivni mulj upravlja se uz prisustvo oksidnih i anoksičnih zona. Ovaj tip aerisanog bazena veoma pogodan za fluktuaciju zagađenja otpadnih voda, odnosno postepeno povećavanje količine zagađenja otpadnih voda.
Dva odvojena, identična cirkulaciona bazena za aktivni mulj su izgrađena za fazu 2. Jedan rezervoar će biti realizovan u fazi 1.
Bazen se mehanički miješa i provjetrava, a njegova konstrukcija omogućava ugradnju, rad i održavanje mašina zahtijevanih od strane tehnologije koja se koristi i proizvođača. Bazen obuhvata dio za denitrifikaciju, mehanički se miješa sa uronjenim mješalicama i dio za nitrifikaciju, provjetren sa vazdušnim mjehurićima (membranski difuzori). Oblik bazena i unutrašnjih pregradnih zidova prilagođen je najpovoljnijem hidrauličnom protoku. Projektovana je šahta za oticanje sa prelivnom pregradom, omogućavajući čak i ispuštanje aktivne smjese u finalni bazen za taloženje mulja.
Svakako, ukupna starost mulja je veća od 20 dana.

Zbog istovremenog taloženja fosfora, proizvodnja hemijskog mulja je uključena u proizvodnju aktivnog mulja.

Table 9: Activated Sludge Tanks
Tabela 9: Bazen za aktivni mulj

		Start up Početak	Design capacity Projektovani kapacitet
Predenitrification tank Denitrifikacioni bazen			
Number of tanks (1st Stage) Broj bazena (1. Faza)	pcs.	1	1

3/12/18
GEORGIOS KARKANIAS
PRESIDENT

Volume of one tank Obim jednog bazena	m^3	363	363
Circulating activated sludge tank Cirkulacioni bazen za aktivni mulj			
Number of tanks (1st Stage) Broj bazena (1. Faza)	pcs.	1	1
Volume of one tank Obim jednog bazena	m^3	1269.8	1269.8
Standard oxygen transfer rate (SOTR) Standardni opseg prenosa mase kiseonika	kg/d	1719.4	1490.9

Table 10: Technical data of aeration system
Tabela 10: Tehnički podaci aeracionog sistema

Parameter Parametar	Unit Jedinica	Value Vrijednost
Number of blowers Broj ventilatora	Pcs	1+1
Capacity of blower Kapacitet ventilator	Nm^3/hour	776

Flow distribution Chamber II

Structure for equal distribution of wastewater to three separate lines of the biological treatment is designed. The wastewater is distributed by gravity, with overflow including adjustable overflow weir. The structure will include valve. Emergency bypass of the downstream tanks is provided as well.

Komora za raspodjelu toka II

Izrađena je struktura za jednaku distribuciju otpadnih voda na tri odvojene linije biološkog tretmana.

3/12/18
GEORGIOS KARKANIAS
PRESIDENT

Otpadna voda se distribuira gravitacijom, sa prelivom uključujući podesivu prelivnu pregradu. Struktura će obuhvatiti ventil. Takođe je obezbijeđena obilaznica nizvodnih bazena u slučaju nužde.

Final Settling Tanks

The activated mixture from the circulating activated sludge tank will flow into the final settling tank, where the separation of sludge from the treated wastewater will take place. After filtration and disinfection the wastewater will then be discharged into the recipient – Zeta River. Part of the settled activated sludge will be returned into the biological treatment facility and the remainder pumped to subsequent treatment as part of the sludge management process.

Two separate, identical final settling tanks is designed for Stage 2. One tank will be realized within Stage 1.

A circular tank is designed for the activated sludge separation. The activated mixture will flow into the center of the tank through a flow distribution structure (influent well). Settled water will be collected in a discharge channel via an adjustable overflow weir (V-notch), located around the tank perimeter. Then it will run off through the window of the runoff shaft to the filtration unit. The tank construction allows the installation of machinery for automatic raking of the bottom and the water surface. Specifically, the removal of the settled sludge and scum is done with rotated radial bridge with bottom and surface scrapers.

The collection of floating impurities is provided via skimmer. Settled sludge is collected in the central tank from where it is removed through piping to the sludge pumping station.

The circulated final settling tank meets the design parameters below:

SS loading per surface area at MHF	less than 6,0 kg/m2.hour
Sludge index	not lower than 150 ml/g
Minimal return sludge flow rate	>16 l/s

Finalni taložni bazeni

Aktivna smjesa iz cirkulaciono aktivnog bazena za mulj prelazi u finalni taložni bazen, gdje će se odvajati mulj iz tretirane otpadne vode. Nakon filtracije i dezinfekcije, otpadna voda će se zatim ispuštati u recipjent - rijeku Zetu. Dio taloženog aktivnog mulja biće vraćen u postrojenje za biološko pročišćavanje, a ostatak ispumpan na naknadni tretman kao dio procesa upravljanja muljem.
Dva odvojena, identična finalna taložna bazena su projektovana za fazu 2. Jedan bazen će biti realizovan u fazi 1.
Cirkulacioni bazen je projektovan za odvajanje aktivnog mulja. Aktivna mješavina prelazi u sredinu bazena kroz strukturu raspodjele protoka (ulazni bunar). Taložena voda će se sakupljati u ispusnom kanalu uz pomoć podesive prelivne pregrade (V-otvor), koja se nalazi oko perimetra bazena. Onda će proći kroz prozor šahte za oticanje do postrojenja za filtriranje. Izgradnja bazena omogućava ugradnju mašina za automatsko

3/12/08
GEORGIOS KARKANIAS
PRESIDENT

pročišćavanje dna i površine vode. Konkretno, uklanjanje taloženog mulja i otpada vrši se sa rotiranim radijalnim mostom sa podnim i površinskim strugačima.

Prikupljanje plutajućih nečistoća vrši se pomoću skimera. Taloženi mulj se sakuplja u centralnom bazenu odakle se uklanja cjevovodom do pumpne stanice za mulj.

Cirkulacioni bazen za finalni taložni bazen ispunjava sljedeće parametre projektovanja:

SS opterećenje po površini na MHF	manje od 6,0 kg / m2
Indeks mulja	nije niži od 150 ml / g
Minimalni opseg protoka povratnog mulja	> 16 l / s

Table 11: Secondary Settling Tank dimensions

Tabela 11: Dimenzije sekundarng taložnog bazena

		Start up Početak	Design capacity Projektovani kapacitet
Number of tanks (1st Stage) Broj bazena (1. Faza)	pcs.	1	1
Tank diameter Prečnik bazena	M	14	14
Liquid depth of tank Dubina tečnosti bazena	M	4	4

Return activated sludge and excess sludge pumping station

A structure containing pumps for return and excess activated sludge is designed. The structure is located close to the final settling tank. One pumping station is designed to be used for each final settling tank. Structurally, the structure is built within Stage 2, technologically only for Stage 1.

Submersible pumps of return and excess activated sludge will be installed in the sumps. Thus, each sump will contain two return sludge pumps and two excess sludge pumps.

Return activated sludge pumps are two, of which one is operating and one is on standby and they will operate in alternate mode in order to achieve equal number of operating hours. On the pressure pipeline an

3/12/18

GEORGIOS KARKANIAS
PRESIDENT

electromagnetic inductive flow meter will be installed. Both pumps will have frequency inverters. Level inside of the pumping station is measured with one ultrasonic level meter.

Pumpna stanica za povratni aktivni mulj i višak mulja

Izgrađena je konstrukcija koja sadrži pumpne stanice za povratni aktivni mulj i višak mulja. Struktura se nalazi u blizini finalnog taložnog bazena. Jedna pumpna stanica je izgrađena da se koristi za svaki finani taložni bazen. Strukturno gledano, objekat je izgrađena u fazi 2, tehnološki samo za fazu 1.
Uronjene pumpe za povratni aktivni mulj i višak mulja će se ugraditi u sabirne bazene. Zbog toga će svaki bazen imati dvije pumpe za povratni mulj i dvije pumpe za višak mulja.

Pumpe za povratni aktivni mulj su dvije, od kojih jedna radi i jedna je na stend baju i one će raditi u alternativnom režimu kako bi se postigao jednak broj radnih sati. Na potisnom cjevovodu će se ugraditi elektromagnetni induktivni mjerač protoka. Obje pumpe će imati frekventne pretvarače. Nivo unutrašnje pumpne stanice se mjeri pomoću jednog ultrazvučnog mjerača nivoa.

Table 12: Technical data for the return activated sludge pumps
Tabela 12: Tehnički podaci za pumpe za povratni aktivni mulj

Parameter Parametar	Unit Jedinica	value Vrijednost
Number of pumps (working + standby) 1st stage Broj pumpi (radna + stend baj) 1. faza	pcs	1+1
Maximum flow of pump Maksimalni protok u pumpi	l/s	27,72
Operating range of the pump Radni opseg pumpe	%	50 - 100

Excess sludge pumps are two, of which one is operating and one is on standby and they will operate in alternate mode in order to achieve equal number of operating hours. On the pressure pipeline an electromagnetic inductive flow meter will be installed. Both pumps will have frequency inverters. Level inside of the pumping station is measured with the above mentioned ultrasonic level meter.

3/12/18
GEORGIOS KARKANIAS
PRESIDENT

Postoje dvije pumpe za višak mulja, od kojih je jedna u pogonu a druga na stend baju i one će raditi u alternativnom režimu kako bi se postigao jednak broj radnih sati. Na potisnom cjevovodu će se ugraditi elektromagnetni induktivni mjerač protoka. Obje pumpe će imati frekventne pretvarače. Nivo unutrašnje pumpne stanice se mjeri pomoću jednog ultrazvučnog mjerača nivoa.

Table 13: Technical data for the excess sludge pumps

Tabela 13: Tehnički podaci za pumpe za višak mulja

Parameter Parametar	Unit Jedinica	Value Vrijednost
Number of pumps (working + standby) 1st stage Broj pumpi (u funkciji + na stend baju) 1. Faza	pcs	1+1
Maximum flow of pump Maksimalni protok pumpe	l/s	7,25
Operating range of the pump Radni opseg pumpe	%	50 - 100

Chemical Phosphorus Precipitation

Chemical phosphorus precipitation unit is added to the treatment process to achieve required outflow concentration. The precipitation is achieved through the addition of ferric chloride sulphate into outlet manhole of circulating activated sludge tank (prior to final settling tank inlet). The phosphorus precipitation will be simultaneous. Ferric chloride sulphate (41% solution) will be dosed from one reservoir. Three membrane pumps is used to dosing solution of ferric chloride sulphate, one for 1st stage, one for 2nd stage and one standby.

The precipitant reservoir is placed on a foundation slab, under the building roof. The area under the reservoir is provided with a leakage basin. Reservoir is made with double walls due to safety reasons, with a capacity sufficient for at least 30 days of operation and equipped with continuous level measurements, three level switches (minimum, maximum, alarm), suction and discharge connections. Liquid P-precipitant is pumped from the auto cistern to the reservoir by means of two chemical resistant pumps with the capacity of 15 m3/h (one in operation and second standby). The flow of the P-precipitant is measured with electromagnetic inductive flow meter. Dosing of the P-precipitant will be in regards to the flow to the biological units. The structure is designed with parameters sufficient also for the planned scope of Stage 2.

3/12/18

GEORGIOS KARKANIAS
PRESIDENT

Hemijsko taloženje fosfora

Hemijsko taloženje fosfora se dodaje procesu prečišćavanja kako bi se postigla potrebna koncentracija odliva. Taloženje se postiže dodavanjem sulfurata željeznog hlorida u izlaznu šahtu cirkulacionog bazena za aktivni mulj (prije uliva u finalni taložni bazen). Taloženje fosfora će se odvijati u isto vrijeme. Željezni hlorid sulfat (41% rastvor) biće doziran iz jednog bazena. Tri membranske pumpe se koriste za doziranje rastvora željeznog hlorid sulfata, jedan za prvu fazu, jedan za drugu fazu i jedna je na stend baju.
Rezervoar za precipitaciju je postavljen na temeljnu ploču, ispod krova zgrade. Prostor ispod rezervoara je opremljen slivnikom. Rezervoar je iz sigurnosnih razloga napravljen sa duplim zidovima, sa kapacitetom dovoljnim za najmanje 30 dana rada i opremljen kontinuiranim mjerenjima nivoa, trostrukim prekidačima (minimalnim, maksimalnim, alarmnim), usisnim i izlaznim priključcima. Tečni P-precipitant se ispumpava iz auto-cistjerne u rezervoar pomoću dvije hemijske otporne pumpe kapaciteta 15 m3 / h (jedna u radu a druga na stend baju). Protok P-precipitanta se mjeri pomoću elektromagnetnog induktivnog merača protoka. Doziranje P-precipitanta biće u vezi sa protokom prema biološkim postrojenjima.
Struktura je dizajnirana sa parametrima dovoljnim za planirani obim faze 2.

Table 14: Technical data for the P-precipitant storage

Tabela 14: Tehnički podaci za skladište za precipitaciju

parameter parametar	Unit Jedinica	Value Vrijednost
reservoir volume obim rezervoara	m^3	10
number of reservoirs broj rezervoara	Pcs	1
number of dosing pumps broj pumpi za doziranje	Pcs	2+1
maximal dosing pump capacity maksimalni kapacitet pumpe za doziranje	l/hour	30

3/12/18
GEORGIOS KARKANIAS
PRESIDENT

2.1.1.4 Filtration unit

In order to meet the effluent quality requirements and additional the effective operation of UV system is foreseen filtration unit.

The proposed microscreen drum filter of FBB type is suitable for tertiary treatment, mainly for removal of undissolved matter in municipal wastewater treatment plants.

Biological treated wastewater containing solid particles flows through the inlet pipe (sewer) into the interior part of the filter drum. Impurities are caught on the inner side of the filter cloth and the filtered wastewater flows through the cloth out. The entire filter remains off during this process. As the filter cloth slowly becomes clogged by the increasing amount of filtered debris, its resistance to the flow increases and the water level inside the filter drum rises. When the preset difference between the levels inside and outside of the filter drum is reached, the water level sensor positioned at the front of the filter, is automatically activated. Simultaneously the drum drive and the backwash pump which pumps the filtered wastewater into the jet rinse system are activated. The debris accumulated on the inner side of the filter cloth is removed by the directed jet stream of water from the nozzles and then washed into the waste trough positioned in the inner drum. The debris is then washed into the sludge tank where it is washed out by the sludge pump. This pump is automatically controlled by the level sensors located on the wall of the sludge tank.

After the rinsing process is finished, hydrostatic pressure drops. The rinsed cloth is moved to the bottom of the filter by the rotation of the drum, the difference in levels inside and outside the drum diminishes and the sensor automatically switches off the drum rotation and the pump. The rotating drum and the pump remain off until reactivated. This operation mode repeats in cycles. The ratio of the rest cycle and the rotation cycle depends on the amount of detritus flowing into the filter, its character and the condition of the filter cloth.

The structure includes two reinforced-concrete channels in which two separate drum filters will be installed, one for stage 1 and one for stage 2. Even distribution of treated wastewater to two channels is ensured for Stage 2, as well as a shutdown of either of the two channels. The structure is built within Stage 1 and one drum filter is installed within Stage 1.

2.1.1.4 Jedinica za filtraciju

Da bi se ispunili zahtjevi za kontrolu efluenta kao i efikasan rad UV sistema, predviđena je jedinica za filtraciju.

Predloženi filter s mikrosito bubnjem tipa FBB je pogodan za tercijarno prečišćavanje, uglavnom za uklanjanje nerastvorenih supstanci u opštinskim postrojenjima za prečišćavanje otpadnih voda.

Biološki tretirane otpadne vode koje sadrže čvrste čestice protiču kroz ulaznu cijev (kanalizacije) u unutrašnji dio bubnja filtera. Nečistoće ostaju na unutrašnjoj strani filterskog platna i filtrirana otpadna voda protiče kroz platno. Tokom ovog postupka cijeli filter ostaje isključen. Kako platno filtera sporo postaje začepljeno usljed povećane količine filterisanih ostataka, njegova otpornost na protok se povećava i nivo vode unutar bubnja filtera raste. Kada se postigne unaprijed podešena razlika između nivoa unutar i izvan bubnja filtera,

3/12/18
GEORGIOS KARKANIAS
PRESIDENT

automatski se aktivira senzor za nivo vode koji se nalazi sa prednje strane filtera. Istovremeno se aktivira pogon bubnja i pumpa za ispiranje koja pumpa filtriranu vodu u mlazni sistem za ispiranje. Ostaci koji se akumuliraju sa unutrašnje strane filterskog platna uklanjaju se usmjerenim mlazom vode iz mlaznica i onda se ispiraju u korito otpada koje se nalazi u unutrašnjem bubnju. Ostaci se zatim ispiraju u bazen za mulj gdje ih ispira pumpa za mulj. Ovom pumpom automatski upravljaju senzori nivoa koji se nalaze na zidu bazena za mulj.

Nakon završetka postupka ispiranja, opada hidrostatički pritisak. Isprano platno se premješta na dno filtera usljed okretanja bubnja, razlika između nivoa unutar i izvan bubnja se smanjuje i senzor automatski isključuje okretanje bubnja i pumpu. Rotirajući bubanj i pumpa ostaju isključeni sve dok se ponovo ne aktiviraju. Ovakav način rada se ponavlja u ciklusima. Odnos ciklusa mirovanja i ciklusa okretanja zavisi od količine nanosa koji prolazi kroz filter, njegovih osobina i stanja filterskog platna.

Objekat obuhvata dva kanala od armiranog betona u koje se ugrađuju dva odvojena filtera s bubnjem, jedan za fazu 1 i jedan za fazu 2. Jednaka distribucija prečišćenih otpadnih voda na dva kanala je obezbijeđena za Fazu 2, kao i zatvaranje bilo kog od ova dva kanala. Objekat se gradi u okviru Faze 1, i jedan filter s bubnjem se instalira u okviru Faze 1.

2.1.1.5 UV disinfection of outflow – Measuring effluent flume

UV system serves as tertiary treatment - outflow disinfection.

UV radiation in the on going process wastewater appears as microbiologically effective, certain technical and cost-saving way to reduce germs. The practice is achieved by reducing the amount of UV radiation germs up to several orders of magnitude.

The advantages of UV disinfection are many including:

- immediate and reliable disposal of bacterial cultures without addition of chemicals
- photochemical reduction of undesirable substances
- no formation of THM or AOX
- no undesirable by-products
- no adverse taste or odour effects of the treated water
- no storage or dosing of disinfectant chemicals
- effectiveness of UV disinfection is dependent on the pH value of treated water
- needs no special reaction vessel or the corresponding time delay
- minimum space requirements of UV technology
- low investment and operating costs and high operational reliability and performance

The decisive criterion for the effectiveness of UV radiation is applied to determine the minimum dose for a given operating condition in the medium disinfected. The dose is defined as the product of intensity and

3/12/18
GEORGIOS KARKANIAS
PRESIDENT

duration of radiation exposure and gives in mJ/cm2. The minimum dose of UV light was calculated by the manufacturer and meets the effluent quality requirements.

The channel UV-system is equipped with automatic quartz sleeve cleaning system and UV-intensity monitoring.

The structure is designed as a single-storey building with roof. The structure includes two reinforced-concrete channels in which two separate UV disinfection units will be installed, one for stage 1 and one for stage 2. Even distribution of treated wastewater to two channels is ensured for Stage 2, as well as a shutdown of either of the two channels. The whole structure is designed to be built and one UV system is installed within Stage 1.

Furthermore, it is foreseen an automatic station for receiving samples of treated wastewater.

One flow measuring structure is designed to be installed. One measuring flume will be installed on the treated wastewater runoff at the end of the process. Parshall measuring flume is used due to their reliability and a wide range of flow rate.

The structure is designed as an open, reinforced-concrete flume made of water-resistance concrete, in which the measuring profile will be installed.

2.1.1.5 UV dezinfekcija oticaja – mjerenje efluenta dovodnog kanala

UV sistem služi kao tercijarno prečišćavanje – dezinfekcija izlaznih voda.

Čini se da UV zračenje u tekućem postupku prečišćavanja otpadnih voda predstavlja mikrobiološki efikasan, određeni tehnički i ekonomičan način da se smanje klice. Postupkom UV zračenja se ostvaruje smanjenje količine klica do nekoliko puta.

Prednosi UV dezinfekcije su brojne, i između ostalog obuhvataju:

- neposredno i pouzdano uništenje bakterijskih kultura bez dodavanja hemikalija;
- fotohemijsko smanjenje nepoželjnih materija;
- nema formiranja THM niti AOX;
- nema neželjenih nusproizvoda;
- nema negativnih uticaja na ukus ili miris prečišćene vode;
- nema skladištenja niti doziranja hemikalija za dezinfekciju;
- efikasnost UV dezinfekcije zavisi od pH vrijednosti prečišćene vode
- fnije potrebno posebno sredstvo za reakciju niti odgovarajuće kašnjenje;
- UV tehnologija ima minimalne zahtjeve u pogledu potrebnog prostora;
- niski investicioni i operativni troškovi a visoka operativna pouzdanost i učinkovitost.

3/12/18
GEORGIOS KARKANIAS
PRESIDENT

Odlučujući kriterijum efikasnosti UV zračenja primijenjen je kako bi se odredila minimalna doza za dato operativno stanje dezinfekcionog sredstva. Doza se definiše kao proizvod intenziteta i trajanja izloženosti zračenju i data je u mJ/cm2. Minimalna doza UV svijetla je proračunata od strane proizvođača i zadovoljava uslove kvaliteta efluenta.

Kanal UV sistema je opremljen automatskim sistemom čišćenja kvarcnih cijevi i sistemom za praćenje UV-intenziteta.

Objekat je projektovan kao prizemna zgrada sa krovom. Objekat ima dva kanala od armiranog betona u koje će biti smještene dvije odvojene jedinice za UV dezinfekciju, jedna za fazu 1 i jedna za fazu 2. Jednaka distribucija prečišćenih otpadnih voda na dva kanala je obezbijeđena za Fazu 2, kao i zatvaranje bilo kog od ova dva kanala. Kompletan objekat je projektovan da bude izgrađen sa jednim instaliranim UV sistemom u fazi 1.

Pored toga, predviđena je i automatska stanica za prijem uzoraka prečišćene otpadne vode.

Projektovana je ugradnja jedne jedinice za mjerenje protoka. Jedan mjerni kanal će biti ugrađen na oticaju prečišćenih otpadnih voda na kraju postupka. Paršalov mjerni kanal se koristi zbog pouzdanosti i širokog opsega brzine protoka.

Objekat je projektovan kao otvoreni armirano betonski kanal sagrađen od vodootpornog betona, u kome će biti ugrađen mjerni profil.

2.1.1.6 Sludge Treatment Units

The WWTP Danilovgrad sludge treatment facility will treat excess activated sludge and chemical sludge (after the incorporation of chemical phosphorus precipitation), which will be pumped from the system together with activated sludge. The production of excess activated sludge includes sludge from chemical precipitation of phosphorus.

2.1.1.6 Jedinice za prečišćavanje mulja

Postrojenje za prečišćavanje mulja WWTP Danilovgrad obavljaće prečišćavanje viška aktivnog mulja i hemijskog mulja (nakon izvođenja hemijske fosforne precipitacije), koji će se ispumpavati iz sistema zajedno sa aktivnim muljem. Proizvodnja viška aktivnog mulja obuhvata mulj koji nastaje od hemijske precipitacije fosfora.

Aerobic stabilization and thickening of the excess sludge

An aerated tank is used for stabilization of the mixture of excess activated sludge and sludge from chemical precipitation of phosphorus. The period of sludge accumulation in aerobic condition guarantees a sufficient stabilization of the sludge. Excess sludge is pumped (from excess sludge pumping station) to the aerated excess sludge stabilization tank. Aerobic stabilization tank is intermittently aerated. The excess sludge is thickened by sedimentation and decantation during the interruption of aeration in the sludge stabilization tank. Before each sludge discharge from sludge activation tank, the aeration in tank of sludge stabilization is

3/12/18
GEORGIOS KARKANIAS
PRESIDENT

stopped. The sludge settling and thickening is about 3-4 hours. Sludge aerobic stabilization tank has aeration system with jet aerator for additional sludge stabilization, an ultrasonic level meter, overflow, three level switches (minimum, maximum, alarm), one submersible mixer and two (one standby) progressive cavity sludge pumps for emptying to the sludge holding tank.

The tank is located close to the mechanical sludge dewatering machinery-room.

The structure is designed with parameters sufficient also for the planned scope of Stage 2.

The aerobic stabilization of sludge will assure a totally smell-free operation of the sewage treatment plant. The stocked condensed sludge (approximately 2 - 3%) will be dewatered with help of polymer flocculation agent in a centrifuge device and brought away for the agricultural exploitation (it is aerobic stabilized). Stabilized sludge holding tank is used for equalizing sludge before its dewatering.

Aerobna stabilizacija i ugušćivanje viška mulja

Aerisani bazen se koristi za stabilizaciju mješavine viška aktivnog mulja i mulja od hemijske precipitacije fosfora. Period akumulacije mulja u aerobnom stanju garantuje dovoljnu stabilizaciju mulja. Višak mulja se ispumpava (iz pumpne stanice za višak mulja) do aerisanog bazena za stabilizaciju viška mulja. Bazen za aerobnu stabilizaciju se snabdijeva vazduhom sa prekidima. Višak mulja se ugušćava putem sedimentacije i separacije taloženjem za vrijeme prekida aeracije bazena za stabilizaciju mulja. Prije svakog ispuštanja mulja iz bazena za aktivni mulj, prekida se aeracija u bazenu za stabilizaciju mulja. Taloženje i ugušćivanje mulja traje oko 3-4 sata. Bazen za aerobnu stabilizaciju mulja ima sistem aeracije sa mlaznim aeratorom za dodatnu stabilizaciju mulja, ultrazvučni mjerač nivoa, preliv, prekidači sa tri nivoa (minimum, maksimum, alarm), jedna potapajuća miješalica i dvije (jedna rezervna) zavojne pumpe za mulj za pražnjenje u bazen za mulj.

Bazen se nalazi u blizini prostorije za mehaničku dehidrataciju mulja.

Konstrukcija je projektovana sa parametrima koji su dovoljni i za planirani obim Faze 2.

Aerobna stabilizacija mulja će osigurati funkcionisanje postrojenja za prečišćavanje kanalizacionih voda bez mirisa. Skupljeni kondenzovani mulj (otprilike 2 - 3%) biće dehidriran uz pomoć polimernog agensa za flokulaciju u centrifugalnom uređaju i odnesen radi upotrebe u poljoprivredne svrhe (ovaj mulj je aerobno stabilizovan). Bazen za stabilizovani mulj se koristi za ujednačavanje mulja prije njegove dehidratacije.

3/12/18

GEORGIOS KARKANIAS

Table 15: Technical data for Sludge aerobic stabilization tank

Tabela 16: Tehnički podaci za bazen za aerobnu stabilizaciju mulja

		Start up / Početak	Design capacity Projektovani kapacitet
Capacity of the treatment plant / Kapacitet postrojenja za prečišćavanje	PE	3.900	6.000
Volume of the aerobic stabilization excess sludge tank / Zapremina bazena za aerobnu stabilizaciju viška mulja	m^3	353.25	353.25
Jet aerator capacity / Kapacitet mlaznog aeratora	Nm^3/hour	620	620

Aerobic stabilized/thickened sludge holding tank

Aerobically stabilized/ thickened sludge is accumulated in a mechanically mixed holding tank. The volume of sludge holding tank is 60.84m3.The tank's capacity is sufficient to hold a 4 days production of thickened sludge for 1st stage. Aerobically stabilized/ thickened sludge is pumped from the holding tank to the mechanical dewatering unit.

The tank is located close to the mechanical sludge dewatering machinery-room.

The structure is designed with parameters sufficient also for the planned scope of Stage 2.

Bazen za aerobno stabilizovani/ ugušćeni mulj

Aerobno stabilizovani/ ugušćeni mulj se akumulira u bazenu sa mehaničkim miješanjem. Zapremina bazena za mulj je 60.84m3. Kapacitet bazena je dovoljan da može da čuva 4-dnevnu proizvodnju ugušćenog mulja za 1. fazu. Aerobno stabilizovani/ ugušćeni mulj se ispumpava iz bazena do jedinice za mehaničku dehidrataciju.

Bazen se nalazi blizu prostorije za mehaničku dehidrataciju mulja.

Konstrukcija je projektovana sa parametrima koji su dovoljni i za planirani obim Faze 2.

3/12/18

GEORGIOS KARKANIAS
PRESIDENT

Sludge Mechanical Dewatering unit

The produced aerobically stabilized/thickened sludge will be dewatered using a centrifuge (decanter). During 1st Stage, only the stored sludge will be dewatered.

Sludge from the sludge holding tank is pumped with two progressing cavity pumps, of which one is operating and one is on standby and they will operate in alternate mode in order to achieve equal number of operating hours. All pumps and motors of the centrifuge have frequency inverters. Pipeline to the centrifuge is equipped with an electromagnetic inductive flow meter.

Design of centrifuge:

Weekly operation time	5 days
Daily operation time (including start and washing of the centrifuge)	5 hours
Minimum final dry matter content (only with polyelectrolyte adding)	23 %

Jedinica za mehaničku dehidrataciju mulja

Proizvedeni aerobno stabilizovani/ ugušćeni mulj se dehidrira pomoću centrifuge (dekantera). Tokom 1. faze, dehidrira se samo skladišteni mulj.

Mulj iz bazena za mulj se ispumpava pomoću dvije zavojne pumpe, od kojih jedna radi dok je druga na stend baju, a rade naizmjenično kako bi ostvarile jednak broj radnih sati. Sve pumpe i motori centrifuge imaju invertore frekvencije. Cjevovod do centrifuge opremljen je elektromagnetnim indukcionim mjeračem protoka.

Projekat centrifuge:

Nedjeljno vrijeme rada	5 dana
Dnevno vrijeme rada (uključujući početak i ispiranje centrifuge)	5 sati
Najmanji konačni sadržaj suve materije (samo uz doziranje polielektrolita)	23 %

Table 176: Technical data for the sludge dewatering

Tabela 186: Tehnički podaci za dehidrataciju mulja

Parameter / parametar	Unit / jedinica	Value / vrijednost
Weekly operation time / nedjeljno vrijeme rada	d	5

3/12/18

GEORGIOS KARKANIAS
PRESIDENT

Daily operation time (including start and washing of the centrifuge) / Dnevno vrijeme rada (uključujući početak i ispiranje centrifuge)	h	5
Number of centrifuges / broj centrifuga	-	1
Flow of centrifuge / protok centrifuge	m^3/h	5
Sludge feeding pump capacity / kapacitet dovodne pumpe mulja	m^3/h	Max 6
Number of sludge feeding pumps / broj dovodnih pumpi mulja	-	1+1
Number of dewatered sludge containers / broj posuda za dehidrirani mulj	-	2

A machinery-room for the mechanical sludge dewatering is designed and is located close to the sludge aerobic stabilization and thickening tank. The structure is designed as a single-storey building with roof. The building shall be thermally insulated. The machinery-room shall be ventilated and heated to the min of 10 °C, or according to valid regulations. The building includes a separate switch room, separated from the machinery-room, with an independent ventilation system. The machinery-room contains machines for sludge dewatering and its structure allows the installation of conveyor. The design assumes mechanical-technological equipment for mechanical sludge thickening to be added within Stage 2. A hard-surface area for containers will be built next to the building. The spatial arrangement and orientation of the building allows trouble-free handling of the container with a truck. The building also includes room to hold the equipment of aerobic sludge stabilization. A heating/cooling system is designed in the building to allow the operation at extreme temperatures and at the maximum loading of the machinery.

In the mechanical sludge dewatering structure the air-conditioning system includes air deodorizing ensuring the removal of odours from the air discharged to the surrounding outer environment. Particularly limits set by the EIA, which forms an integral part of the WWTP design and construction, will be observed.

Structurally, the structure is built within Stage 2, technologically only for Stage 1.

The hard-surface area for the containers will be made of concrete, drained to the internal sewage system.

At present WWTP Danilovgrad is not exist, therefore we do not know the quality of its sludge. We also do not know soil composition in field, where will be applied dewatered sludge.

Danilovgrad is not industrial city, therefore we do not expect the production of highly contaminated sewage sludge. Therefore, we expect the maximum sludge contamination by point C, according point b, Annex 1 of the Regulation.

3/12/18
GEORGIOS KARKANIAS
PRESIDENT

Due to the uncertain composition of sludge (sludge do not exists), we propose to use stabilized and dewatered sludge from WWTP Danilovgrad for reclamation of landfill. The minimal concentration of dry matter in the dewatered sludge is 25% (after dewatering in the centrifuge and further dewatering into the sludge storage site).

Mašinska prostorija za mehaničku dehidrataciju mulja projektovana je i nalazi se u blizini bazena za aerobnu stabilizaciju i uguščivanje mulja. Konstrukcija je projektovana kao prizemna zgrada sa krovom. Zgrada mora imati toplotnu izolaciju. Mašinska prostorija se mora provjetravati i zagrijavati najmanje do 10 °C, ili u skladu za važećim propisima. Zgrada obuhvata posebnu kontrolnu sobu, odvojenu od mašinske prostorije, sa nezavisnim sistemom za ventilaciju. U mašinskoj prostoriji se nalaze mašine za dehidrataciju mulja, a njena konstrukcija omogućava ugradnju transportera. Projektom je predviđena mašinsko-tehnološka oprema za mašinsko uguščivanje mulja koje se dodaje u okviru Faze 2. Pored zgrade je potrebno sagraditi prostor tvrde podloge za kontejnere. Prostorno uređenje i orijentacija zgrade omogućava nesmetano rukovanje kontejnerima pomoću kamiona. Zgrada takođe ima prostoriju u kojoj se nalazi oprema za aerobnu stabilizaciju mulja. Sistem grijanja/hlađenja zgrade je projektovan kako bi se omogućio rad na ekstremnim temperaturama i na maksimalnom opterećenju mehanizacije.

U konstrukciji za mehaničku dehidrataciju mulja, sistem klimatizacije sadrži osvježavanje vazduha čime se osigurava uklanjanje neprijatnih mirisa iz vazduha koji se ispušta u okolnu spoljašnju sredinu. Naročito se moraju poštovati ograničenja definisana u EIA, koja čini sastavni dio projektovanja i izgradnje PPOV.

U građevinskom smislu, objekat se gradi u okviru Faze 2, tehnološki samo za Fazu 1.

Prostor tvrde podloge za kontejnere treba biti sagrađen od betona, sa odvodnjom do internog kanalizacionog sistema.

Za sada PPOV Danilovgrad ne postoji, tako da ne znamo kakav je kvalitet mulja. Takođe ne znamo kakav je sastav tla na terenu, gdje će se primjenjivati dehidrirani mulj.

Danilovgrad nije industrijski grad, tako da ne očekujemo proizvodnju visoko zagađenog kanalizacionog mulja. Dakle, očekujemo maksimalno zagađenje mulja do tačke C, shodno tački b, Prilog 1 Regulative.

Zbog nepouzdanog sastava mulja (mulj ne postoji) predlažemo da se koristi stabilizovani i dehidrirani mulj iz PPOV Danilovgrad za melioraciju deponije. Minimalna koncentracija suve materije u dehidriranom mulju je 25% (nakon dehidratacije u centrifugi i dodatne dehidratacije u odlagalištu za mulj).

Mechanical sludge thickening (2nd stage)

The mechanical sludge thickening machinery-room will be realized within Stage 2 of the construction, structurally it will be prepared within Stage 1. The mechanical-technological equipment will be located in the mechanical sludge dewatering machinery-room within Stage 2.

3/12/18

GEORGIOS KARKANIAS
PRESIDENT

Mehaničko ugušćivanje mulja (2. faza)

Mašinska prostorija za mehaničko ugušćivanje mulja se realizuje u okviru 2. Faze izgradnje, konstruktivno je potrebno pripremiti u okviru 1. Faze. Mehaničko-tehnološka oprema se nalazi u mašinskoj prostoriji za mehaničku dehidrataciju mulja u okviru 2. Faze.

Dewatered sludge storage site

The structure will serve as a reserve temporary storage site of dewatered sludge prior to its disposal. Also, this structure will serve for further sludge dewatering, so that to be achieved concentration of dry matter in the dewatered sludge minimum 25%.

This storage site will be covered with transparent material.

The structure is designed with parameters sufficient also for the planned scope of Stage 2.

The structure is designed as a reinforced-concrete monolithic structure with a handling area, made of water-resistant concrete, consisting of the bottom (reinforced-concrete slab) and reinforced-concrete supporting walls from three sides, covered with roof.

The effective area of the structure is 325m2 (12.5m * 26m).

Odlagalište za dehidrirani mulj

Ovaj objekat služi kao rezervno privremeno odlagalište za dehidrirani mulj prije njegovog odlaganja. Osim toga, ovaj objekat će služiti i za dalju dehidrataciju mulja, tako da se može ostvariti koncentracija suve materije u dehidriranom mulju od najmanje 25% .

Ovo odlagalište će biti pokriveno providnim materijalom.

Objekat je projektovan sa parametrima koji su dovoljni i za planirani obim 2. Faze.

Objekat je projektovan kao armirano-betonski monolitni objekat sa prostorom za rukovanje, napravljen od vodo-otpornog betona, koji se sastoji od dna (armirano-betonska ploča) i armirano-betonskih potpornih zidova sa tri strane, pokriven krovom.

Korisna površina objekta je 325m2 (12.5m * 26m).

2.1.1.7 Common requirements of WWTP

Diesel generator

Diesel generator is provided as a substitute to power supply. Diesel generator will be supply electric power for WWTP operation at the time of power outage. Sludge management will not be supplied with electricity from diesel generator.

3/12/18

GEORGIOS KARKANIAS
PRESIDENT

2.1.1.7 Opšti uslovi za PPOV

Dizel generator

Diesel generator se obezbjeđuje kao zamjena za električnu energiju. Dizel generator će obezbjeđivati električnu energiju za rad PPOV za vrijeme nestanka struje. Upravljanje muljem se neće napajati strujom iz dizel generatora.

Service water preparation unit

Potable and service water distribution system is designed for the WWTP premises. The source of potable water will be the existing supply system of the town of Danilovgrad. A connection running along an existing unpaved road to the WWTP is designed. The connection includes a measurement shaft. The in-compound potable water distribution system will supply all main structures. It will be used for hygienic purposes and operation of those technological equipment and machinery which are required to use potable water. The distribution system is designed to meet hygienic and technological requirements.

The source of service water will be treated water from the WWTP effluent obtained from the outflow of the UV disinfection structure. The service water distribution is designed according to the operational requirements and needs of technological equipment and machinery supplied. Alternatively, potable water may be used as the source of service water.

Specifically, treated wastewater, defined as service water, is used as wash water for the equipment such as coarse and fine screens, spiral conveyers, spiral presses, centrifuge etc. After the disinfection one submersible pump pumps water into the tank with effective volume 4,5 m3 (1.5m*1.5m*2m), equipped with automatic supplemental filling with potable water and three level switches, placed inside the structure. A set with two pressure boosting pumps and expansion vessels (automatic pressure station) raises the pressure, which is necessary for the washing of individual equipment (max 6 bar). The automatic pressure station is equipped with its own automatic control of pumps with frequency converters.

A fire-fighting water source is provided in compliance with relevant regulations.

Jedinica za pripremu servisne vode

Sistem za distribuciju pijaće i servisne vode je projektovan za prostorije PPOV. Izvor pijaće vode će biti postojeći sistem za vodosnabdijevanje grada Danilovgrada. Projektovan je priključak koji se proteže duž postojećeg neasfaltiranog puta do PPOV. Priključak obuhvata mjerni šaht. Sistem za distribuciju pijaće vode unutar kompleksa snabdijeva sve glavne objekte. Koristiće se za higijenske potrebe i rad one tehnološke opreme i mašinerije koja zahtijeva upotrebu pijaće vode. Sistem za distribuciju je projektovan tako da zadovoljava higijenske i tehnološke uslove.

Izvor servisne vode biće prečišćena voda iz efluenta PPOV koja se dobija iz oticaja UV dezinfekcione jedinice. Distribucija servisne vode projektovana je u skladu sa operativnim uslovima i potrebama dostavljene

3/12/18

GEORGIOS KARKANIAS
PRESIDENT

tehnološke opreme i mašinerije. Kao alternativno rješenje, pijaća voda se može koristiti kao izvor servisne vode.

Detaljnije, prečišćene otpadne vode, definisane kao servisne vode, koriste se kao voda za pranje opreme poput grubih i finih sita, pužnih transportera, pužnih presa, centrifuge, itd. Nakon dezinfekcije, jedna potapajuća pumpa pumpa vodu u bazen korisne zapremine 4,5 m3 (1.5m*1.5m*2m), opremljen automatskim dopunskim punjenjem pijaćom vodom i tri nivoa prekidača, smješteni unutar konstrukcije. Komplet od dvije pumpe za povišenje pritiska i ekspanzionim posudama (stanica za automatski pritisak) povećava pritisak, što je neophodno za pranje pojedinačne opreme (max 6 bar). Stanica za automatski pritisak je opremljena sopstvenom automatskom kontrolom pumpi sa konverterima frekvencije.

Izvor vode za gašenje požara je obezbijeđen u skladu sa relevantnim propisima.

Influent and effluent waste water monitoring

The operator ensures sampling of inflow wastewater, treated wastewater, concentration of mixed liquor etc. Samples will be analyzed by an accredited laboratory. The number of the samples is minimal 1 times monthly. During the start-up of WWTP operation it is recommended to make samples analyses weekly.

Sampling profiles:

- Inflow wastewater – pH, COD, BOD5, SS, VSS, NKj, Ptot
- Treated wastewater – pH, COD, BOD5, SS, VSS, Ntot, N-NH4, N-NO3, Ptot
- Mixed liquor in activated basin – Imhoff, SS, VSS
- Return and excess sludge – SS, VSS
- Stabilized sludge – SS,VSS
- Dewatered sludge - TS, VTS, SS, VSS

Flow measurement:

- Outflow of treated wastewater
- Return sludge
- Excess sludge
- Flow to the sludge dewatering
- Dose of phosphorus precipitation agent
- Dose of solution of organic flocculant

Installation of online analysers is not proposed.

3/12/18

GEORGIOS KARKANIAS
PRESIDENT

Praćenje ulaznih i izlaznih otpadnih voda

Operater osigurava uzorkovanje priliva otpadnih voda, prečišćenih otpadnih voda, koncentracije miješane tečnosti, itd. Uzorke analizira akreditovana laboratorija. Broj uzorkovanja je najmanje 1 mjesečno. Za vrijeme početka rada PPOV porepručuje se nedjeljno analiziranje uzoraka.

Profili uzorkovanja:

- Priliv otpadnih voda – pH, COD, BOD5, SS, VSS, NKj, Ptot
- Prečišćene otpadne vode – pH, COD, BOD5, SS, VSS, Ntot, N-NH4, N-NO3, Ptot
- Miješana tečnost u aktiviranom basenu – Imhoff, SS, VSS
- Povratni mulj i višak mulja – SS, VSS
- Stabilizovani mulj – SS,VSS
- Dehidrirani mulj - TS, VTS, SS, VSS

Mjerenje protoka:

- Oticaj prečišćenih otpadnih voda
- Povratni mulj
- Višak mulja
- Protok do dehidratacije mulja
- Doziranje agensa za fosfornu precipitaciju
- Doziranje rastvora organskog flokulenta

Nije predložena instalacija onlajn analizator.

Waste water sludge monitoring

Sludge is the result of treatment and is directly in the function of treatment level and technology. The quality of sludge will be analysed regularly to prevent possible hazardous impacts on the environment. Sludge will be managed in accordance with the regulations "PRAVILNIK o bližim uslovima koje treba da ispunjava komunalni kanalizacioni mulj, količine, obim, učestalost i metode analize komunalnog kanalizacionog mulja za dozvoljene namjene i uslove koje treba da ispunjava zemljište planirano za njegovu primjenu", "Official Gazette no. 89/09 of 31 December 2009".

The monitoring programme involves the following indicators:

- Quantities of the processed sludge;
- Mass of dry substance;

3/12/18

GEORGIOS KARKANIAS
PRESIDENT

- Concentration of total N (mg/kg DS.);
- Concentration of total P (mg/kg DS);
- Concentration of total K (mg/kg DS);
- Concentration of Cd (mg/kg DS);
- Concentration of Pb (mg/kg DS);
- Concentration of Cr (mg/kg DS);
- Concentration of Zn (mg/kg DS);
- Concentration of hazardous organic substances (PCB,. HCH, etc.) (µg/kg DS)

Praćenje mulja otpadnih voda

Mulj je rezultat procesa prečišćavanja i direktno je u funkciji nivoa i tehnologije prečišćavanja. Kvalitet mulja treba redovno analizirati kako bi se spriječili mogući opasni uticaji na životnu sredinu. Muljem se upravlja u skladu sa odredbama „PRAVILNIKA o bližim uslovima koje treba da ispunjava komunalni kanalizacioni mulj, količine, obim, učestalost i metode analize komunalnog kanalizacionog mulja za dozvoljene namjene i uslove koje treba da ispunjava zemljište planirano za njegovu primjenu", „Sl. list br. 89/09 od 31.12.2009. godine".

Program praćenja obuhvata sljedeće pokazatelje:

- količine obrađenog mulja;
- masu suve materije;
- koncentraciju ukupnog N (mg/kg DS.);
- koncentraciju ukupnog P (mg/kg DS);
- koncentraciju ukupnog K (mg/kg DS);
- koncentraciju Cd (mg/kg DS);
- koncentraciju Pb (mg/kg DS);
- koncentraciju Cr (mg/kg DS);
- koncentraciju Zn (mg/kg DS);
- koncentraciju opasnih organskih materija (PCB,. HCH, itd.) (µg/kg DS)

2.1.1.8 Blower house

The structure, in which blowers of circulating tanks are to be placed, is designed as a single-storey building with a saddle roof. The building ensures safe operation and maintenance of the blowers. It is divided into a

3/12/18
GEORGIOS KARKANIAS
PRESIDENT

blower room and a switch room. The building shall be fitted with equipment for handling the blowers (their assembly and disassembly). The air intake is located on the northern part of the building. The blower room shall be clad with noise insulation to prevent the maximum permissible noise level from being exceeded at the WWTP premise border. A heating/cooling system is designed in the building to allow the operation at extreme temperatures and at the maximum loading of the blowers.

Structurally, the structure is built within Stage 2, technologically only for Stage 1.

Building foundations, foundations for technological equipment, cable troughs, supporting floor slabs, and other supporting concrete parts of the building shall be made of reinforced-concrete. The ceiling is designed in the form of a monolithic reinforced-concrete structure.

The walls shall be built from perforated bricks of a complete bricklaying system.

The roof supporting structure shall be formed by a system of wooden prefabricated truss girders with longitudinal wind bracing.

Standard internal plaster, lime-cement external plaster; reinforced-concrete floor with mineral filling and dust-prevention coating; plastic windows, steel doors.

The structure shall include locksmith's products (lids, covers, etc.).

2.1.1.8 Objekat za produvavanje

Objekat, u kome će biti smještene duvaljke za cirkulacione bazene, projektovan je kao prizemna zgrada sa dvostrešnim krovom. Zgrada obezbjeđuje bezbjedan rad i održavanje duvaljki. Podijeljena je na prostoriju za produvavanje i komandnu prostoriju. Zgrada treba imati opremu za rukovanje duvaljkama (odnosno njihovu montažu i demontažu). Usisni otvor se nalazi sa sjeverne strane zgade. Prostorija za produvavanje treba biti obložena zvučnom izolacijom kako bi se spriječilo prekoračenje najvećeg dozvoljenog nivoa buke na granici prostorija PPOV. Sistem grijanja/hlađenja projektovan je unutar objekta kako bi se omogućio rad na ekstremnim temperaturama i pri najvećem opterećenju duvaljki.

U građevinskom smislu, objekat se gradi u okviru Faze 2, tehnološki samo za Fazu 1.

Temelji zgrade, temelji za tehnološku opremu, rovovi za kablove, potporne ploče poda, i ostali prateći betonski djelovi zgrade biće sagrađeni od armiranog betona. Plafon je projektovan u vidu monolitne konstrukcije od armiranog betona.

Zidovi se grade od perforiranih cigli po sistemu zidanja.

Krovnu potpornu konstrukciju čini sistem drvenih prefabrikovanih rešetkastih nosača sa podužnom spregom protiv vjetra.

Standardni unutrašnji malter, spoljašni krečni malter; pod od armiranog betona sa mineralnom ispunom i premazom za sprečavanje prašine; plastični prozori, čelična vrata.

3/12/18

GEORGIOS KARKANIAS
PRESIDENT

Konstrukcija obuhvata i bravarske proizvode (kapke, poklopce, itd.).

2.1.1.9 Operation building

The structure is designed as a single-storey building with a saddle roof. It shall serve as the control and administrative building, providing facilities for the total of 11 persons. The building contains a control room with a view of the WWTP structures, office, meeting room, small kitchen, clean and dirty changing rooms, daytime room, washroom and toilet, and a room for handling samples with basic laboratory equipment. The building shall be thermally insulated with residential rooms heated to the min of 20 °C, or according to valid regulations.

The structure is designed with parameters sufficient also for the planned scope of Stage 2.

Foundations, supporting floor slabs, and other supporting concrete parts of the structure shall be made of reinforced-concrete. The ceiling shall be made in the form of a monolithic reinforced-concrete structure.

The walls shall be built from perforated bricks of a complete bricklaying system.

The roof supporting structure shall be formed by a system of wooden prefabricated truss girders with longitudinal wind bracing.

Standard internal plaster, lime-cement external plaster; floors with industrial ceramic skid-proof tiles; walls with ceramic cladding; plastic windows, steel doors.

The structure includes locksmith's products (lids, covers, etc.).

2.1.1.9 Upravna zgrada

Objekat je projektovan kao prizemna zgrada sa dvostrešnim krovom. Služi kao komandna i administrativna zgrada, koja može da smjesti ukupno 11 osoba. Zgrada ima kontrolnu sobu sa pogledom na objekte PPOV, kancelariju, prostoriju za sastanke, malu kuhinju, prostorije za presvlačenje (čiste i prljave odjeće), prostorija za dnevni boravak, kupaonica i toalet, i prostorija za rukovanje uzorcima sa osnovnom laboratorijskom opremom. Zgrada će imati toplotnu izolaciju pri čemu će prostorije u kojima se boravi biti zagrijane na najmanje 20 °C, ili u skladu sa važećim propisima.

Objekat je projektovan sa parametrima koji su dovoljni i za planirani obim 2. Faze.

Temelji zgrade, potporne podne ploče i ostali prateći betonski djelovi zgrade biće sagrađeni od armiranog betona. Plafon će biti izveden u obliku monolitne konstrukcije od armiranog betona.

Zidovi se grade od perforiranih cigli po sistemu zidanja.

Krovnu potpornu konstrukciju čini sistem drvenih prefabrikovanih rešetkastih nosača sa podužnom spregom protiv vjetra. Standardni unutrašnji malter, spoljašni krečni malter; podovi od neklizajućih industrijskih keramičkih pločica; zidovi sa keramičkom oblogom; plastični prozori, čelična vrata.

Konstrukcija obuhvata i bravarske proizvode (kapke, poklopce, itd.).

3/12/18

GEORGIOS KARKANIAS
PRESIDENT

Warehouse (part of operation building)

The structure is designed as a part of operation building (single-storey building with a saddle roof). This part of building provides safe storage of tools, machines, and material used for the WWTP operation, repairs, and maintenance. The net storage area corresponds to the minimum requirements and is kept dry and clean. The warehouse includes a space for storing acids and alkalis. This part of building shall be thermally insulated, ventilated, and heated to the min of 10 °C, or according to valid regulations.

The structure is designed with parameters sufficient also for the planned scope of Stage 2.

Foundations, supporting floor slabs, and other supporting concrete parts of the structure shall be made of reinforced-concrete. The ceiling shall be made in the form of a monolithic reinforced-concrete structure.

The walls shall be built from perforated bricks of a complete bricklaying system.

The roof supporting structure shall be formed by a system of wooden prefabricated truss girders with longitudinal wind bracing.

Standard internal plaster, lime-cement external plaster; floors with industrial ceramic skid-proof tiles; walls with ceramic cladding; plastic windows, steel doors.

The structure shall include locksmith's products (lids, covers, etc.).

Skladište (dio upravne zgrade)

Objekat je projektovan kao dio upravne zgrade (prizemna zgrada sa krovom na dvije vode). Ovaj dio zgrade obezbjeđuje sigurno skladištenje alata, mašina i materijala koji se koriste za rad, popravke i održavanje PPOV. Neto površina skladišta odgovara minimalnim zahtjevima i održava se suvom i čistom. Skladište obuhvata prostor za čuvanje kiselina i baza. Ovaj dio zgrade mora imati toplotnu izolaciju, ventilaciju i mora biti zagrijan najmanje do 10 °C, ili u skladu sa važećim propisima.

Objekat je projektovan sa parametrima koji su dovoljni i za planirani obim 2. Faze.

Temelji, potporne podne ploče i ostali potporni betonski djelovi moraju biti od armiranog betona. Plafon se gradi u obliku monolitne armirano betonske konstrukcije.

Zidovi se grade od perforiranih cigli po sistemu zidanja.

Krovnu potpornu konstrukciju čini sistem drvenih prefabrikovanih rešetkastih nosača sa podužnom spregom protiv vjetra.

Standardni unutrašnji malter, spoljašni krečni malter; podovi od neklizajućih industrijskih keramičkih pločica; zidovi sa keramičkom oblogom; plastični prozori, čelična vrata.

Konstrukcija obuhvata i bravarske proizvode (kapke, poklopce, itd.).

3/12/18

GEORGIOS KARKANIAS
PRESIDENT

2.1.1.10 Garages

It is provided two garages, one for truck and one for two passenger cars.

The structures is designed as single-storey buildings with a saddle roof. The first building provides parking space for one truck and the second building provides parking space for two passenger cars and separate location of mobile backup power supply including the necessary equipment. The buildings shall be heated to the min of 5 °C, or according to valid regulations.

The structures is designed with parameters sufficient also for the planned scope of Stage 2.

Foundations, supporting floor slabs, and other supporting concrete parts of the structure shall be made of reinforced-concrete. The ceiling shall be made in the form of a monolithic reinforced-concrete structure.

The walls shall be built from perforated bricks of a complete bricklaying system.

The roof supporting structure shall be formed by a system of wooden prefabricated truss girders with longitudinal wind bracing.

Standard internal plaster, lime-cement external plaster; mesh-reinforced concrete floors with filling, resistant against abrasion, mechanical damages and dustiness; plastic windows, steel doors; automatic, electrically-driven sectional garage doors with thermal insulation and integrated openings.

The structure shall include locksmith's products (ventilation grilles, etc.).

2.1.1.10 Garaže

Predviđene su dvije garaže, jedna za kamion a druga za putnička vozila.

Objekti su projektovani kao prizemne zgrade sa dvostrešnim krovom. Prva zgrada obezbjeđuje parking mjesto za jedan kamion, a druga zgrada obezbjeđuje parking mjesto za dva putnička vozila i posebno mjesto za pokretnu pomoćnu stanicu za napajanje električnom energijom, uključujući neophodnu opremu. Zgrada treba biti zagrijana na najmanje 5 °C, ili u skladu sa važećim propisima.

Objekat je projektovan sa parametrima koji su dovoljni i za planirani obim 2. Faze.

Temelji, potporne podne ploče i ostali potporni betonski djelovi objekta moraju biti od armiranog betona. Plafon se gradi u obliku monolitne armirano betonske konstrukcije.

Zidovi se grade od perforiranih cigli po sistemu zidanja.

Krovnu potpornu konstrukciju čini sistem drvenih prefabrikovanih rešetkastih nosača sa podužnom spregom protiv vjetra.

Standardni unutrašnji malter, spoljašni krečni malter; podovi od armiranog betona sa ispunom, otporni na abraziju, mehaničko oštećenje i skupljanje prašine; plastični prozori, čelična vrata; automatska garažna vrata na električni pogon sa toplotnom izolacijom i integrisanim otvorima.

Konstrukcija obuhvata i bravarske proizvode (ventilacione rešetke, itd.).

3/12/18
GEORGIOS KARKANIAS
PRESIDENT

Technical Offer

Analytical list with description of electromechanical equipment

KARKANIAS ENVIRONMENTAL TECHNOLOGY S.A.
INDUSTRIAL AREA OF LARISA - GREECE
POSTAL CODE 41004, BOX 3053
TEL.: +30 2410 541326 - FAX: +30 2410 541354
Email: info@karkanias.gr
TAX NUMBER: 095244711
REGISTRATION NUMBER: 48779/31/B/01/112

3/12/18

GEORGIOS KARKANIAS
PRESIDENT

CONTENT

1. INLET AND OVERFLOW MANHOLE 1
1.1 Four (4) penstocks for chambers isolation 1
1.2 Two (2) gravel traps 1
1.3 One (1) lifting device for gravel traps 1
1.4 One (1) motorized penstock for controlling inflowing quantity of wastewater 1
1.5 One (1) scum diaphragm 1
1.6 One (1) overflow weir 1
1.7 One (1) ultrasonic flow meter with parshall flume 2
1.8 One (1) automatic station for receiving untreated wastewater samples 2
1.9 Two (2) containers for gravels 3
1.10 One (1) gravel container chassis with electric drive 3

2. SEPTAGE UNIT 4
2.1 One (1) electromotor knife gate valve on the inlet pipeline 4
2.2 One (1) gravel trap 4
2.3 One (1) electromagnetic inductive flow meter on the inlet pipeline 4
2.4 One (1) pH and temperature meter on the inlet pipeline 5
2.5 One (1) conductivity meter on the inlet pipeline 6
2.6 One (1) automatic cleaned fine screen, drum with screenings screw 7
2.7 One (1) submersible mixer with lifting device in the septage collection tank 8
2.8 Two (2) submersible pumps in the septage collection tank, one standby 8
2.9 One (1) lifting device (davit) for pumps 8
2.10 One (1) ultrasonic level meter 9
2.11 One (1) valve for tank emptying by gravity 9
2.12 One (1) container for screenings and gravels 9
2.13 One (1) automatic station for receiving septage 9
2.14 One (1) automatic station for receiving samples of septage 10

3. PUMPING STATION 11
3.1 Four (4) penstocks for screens isolation 11
3.2 One (1) automatic cleaned coarse screen (multi rake) 11
3.3 One (1) manual cleaned coarse screen, standby 11
3.4 One (1) screw conveyor for screenings 11
3.5 One (1) ultrasonic differential level meter 12
3.6 One (1) container for screenings 12
3.7 One (1) screenings container chassis with electric drive 12
3.8 Three (3) submersible pumps in pumping station, one standby 13
3.9 Three (3) frequency converters (inverters) for pumps 13
3.10 One (1) electromagnetic inductive flow meter on pumping discharge pipe 13
3.11 One (1) ultrasonic level meter 14
3.12 One (1) lifting device (monorail) for pumping station 14
3.13 One (1) scum diaphragm for floating substances 14
3.14 One (1) penstock 14

4. MECHANICAL WASTEWATER PRETREATMENT UNIT 15
4.1 Two (2) valves on by pass pipeline and inlet pipeline 15
4.2 One (1) compact mechanical pretreatment unit 15
4.3 Four (2+2) containers for screenings and sand 17
4.4 One (1) screenings container chassis with electric drive 17

3/12/18
GEORGIOS KARKANIAS
PRESIDENT

4.5 One (1) sand container chassis with electric drive 17

5. BIOLOGICAL TREATMENT PROCESS 18

5.1 FLOW DISTRIBUTION CHAMBER I 18
5.1.1 One (1) overflow weir for flow distribution 18
5.1.2 One (1) valve on pipeline 18
5.1.3 One (1) overflow telescopic valve for by pass 18

5.2 PREDENITRIFICATION TANK 18
5.2.1 One (1) submersible mixer with lifting device in the predenitrification tank 18

5.3 CIRCULATING ACTIVATED SLUDGE TANK 19
5.3.1 Two (2) submersible mixers with lifting devices, one per corridor 19
5.3.2 Two (2) rotary lobe blowers for aeration, one standby, with noise covers 19
5.3.3 Two (2) frequency converters (inverters) for blowers 19
5.3.4 One (1) lifting device (monorail) for blowers 19
5.3.5 One (1) fan for ventilation of blowers building 20
5.3.6 One (1) main air pipeline 20
5.3.7 Two (2) air distribution pipes with batterfly valves for flow control or isolation 20
5.3.8 Two (2) air grids for diffusers 20
5.3.9 One hundred and ninety two (192) fine bubble membrane diffusers (disc type), ninety six per grid 20
5.3.10 One (1) overflow weir 20
5.3.11 One (1) dissolved oxygen meter 21
5.3.12 One (1) MLSS meter 23
5.3.13 One (1) mixer (vertical shaft) in outlet manhole of the tank 23

5.4 FLOW DISTRIBUTION CHAMBER II 24
5.4.1 One (1) overflow weir for flow distribution 24
5.4.2 One (1) valve on pipeline 24
5.4.3 One (1) overflow telescopic valve for by pass 24

5.5 FINAL SETTLING TANK 24
5.5.1 One (1) rotated radial bridge with bottom and surface scrapers 24
5.5.2 One (1) scum skimmer 24
5.5.3 One (1) influent well 24
5.5.4 One (1) circumferential overflow weir (V- notch) 25
5.5.5 One (1) circumferential scum diaphragm 25

5.6 RETURN ACTIVATED SLUDGE AND EXCESS SULDGE PUMPING STATION 25
5.6.1 Two (2) submersible pumps for return sludge, one standby 25
5.6.2 Two (2) frequency converters (inverters) for return sludge pumps 25
5.6.3 One (1) electromagnetic inductive flow meter for return sludge 26
5.6.4 One (1) ultrasonic level meter 26
5.6.5 Two (2) lifting devices (davit) for pumps, one for excess sludge pumps and one for return sludge pumps 26
5.6.6 Two (2) submersible pumps for excess sludge, one standby 27
5.6.7 Two (2) frequency converters (inverters) for excess sludge pumps 27
5.6.8 One (1) electromagnetic inductive flow meter for excess sludge 27
5.6.9 One (1) valve on sludge pipeline 28

5.7 CHEMICAL PHOSPHORUS PRECIPITATION 28

3/12/18
GEORGIOS KARKANIAS
PRESIDENT

5.7.1 Three (3) dosing (diaphragm) pumps for phosphorus precipitation chemical solution, one standby, with pipes and valves 28
5.7.2 One (1) electromagnetic inductive flow meter for phosphorus precipitation chemical solution 28
5.7.3 One (1) double-walled reservoir for phosphorus precipitation chemical solution, with three level switches 29
5.7.4 Two (2) pumps (magnetic driven, plastic, centrifugal) for chemical solution, one standby 29

6. FILTRATION UNIT 30
6.1 One (1) overflow penstock for filter tank flow distribution and isolation 30
6.2 One (1) penstock for bypass 30
6.3 One (1) automatic cleaned microscreen rotary drum filter for wastewater tertiary treatment 30

7. UV DISINFECTION UNIT - EFFLUENT 32
7.1 Two (2) overflow penstocks for UV channel isolation 32
7.2 One (1) UV disinfection automatic cleaned system 32
7.3 One (1) ultrasonic flow meter with parshall flume 34
7.4 One (1) automatic station for receiving treated wastewater samples 34
7.5 One (1) submersible pump for service water tank 35
7.6 Three (3) level switches for submersible pump operation 35
7.7 One (1) lifting device for submersible pump 35
7.8 One (1) overflow weir in UV outlet manhole 35

8. SLUDGE TREATMENT UNITS 36

8.1 SLUDGE AEROBIC STABILISATION AND THICKENING TANK 36
8.1.1 One (1) submersible mixer with lifting device 36
8.1.2 One (1) submersible jet aerator, with one extra pump stock 36
8.1.3 One (1) ultrasonic level meter 36
8.1.4 Three (3) level switches 37
8.1.5 One (1) lifting device for jet aerator 37
8.1.6 Two (2) drainage overflow pipes with gate valves 37
8.1.7a Two (2) macerators 37
8.1.7b Two (2) progressing cavity (screw) sludge pumps for feeding holding tank, one standby, with overpressure protection and dry run protection 38
8.1.8 Two (2) frequency converters (inverters) for sludge pumps 38

8.2 SLUDGE HOLDING TANK 38
8.2.1 One (1) submersible mixer with lifting device 38

8.3 SLUDGE MECHANICAL DEWATERING UNIT 39
8.3.1 Two (2) progressing cavity (screw) sludge pumps for decanter feeding, one standby, with overpressure protection 39
8.3.2 Two (2) frequency converters (inverters) for sludge pumps 39
8.3.3 One (1) electromagnetic inductive flow meter for stabilized/thickened sludge 40
8.3.4 One (1) centrifuge (decanter) for sludge dewatering 41
8.3.5 One (1) automatic preparation device for polyelectrolyte 42
8.3.6 Two (2) progressing cavity (screw) pumps for dosing polyelectrolyte, one standby, with overpressure protection 43
8.3.7 Two (2) frequency converters (inverters) for polyelectrolyte dosing pumps 43
8.3.8 One (1) electromagnetic inductive flow meter for polyelectrolyte solution 43
8.3.9 One (1) screw conveyor for dewatered sludge 44
8.3.10 Two (2) containers for dewatered sludge 44
8.3.11 One (1) sludge container chassis with electric drive 44

3/12/18
GEORGIOS KARKANIAS
PRESIDENT

8.3.12 One (1) fan for ventilation of sludge dewatering building 44
8.3.13 One (1) lifting device (overhead crane) for dewatering equipment 44

9. SERVICE WATER UNIT 45
9.1 One (1) automatic pressure station with two (one standby) centrifugal pumps for service water 45

10. TRANSFORMER STATION, POWER SWITCHBOARDS, BACKUP POWER SUPPLY 46
10.1 Medium Voltage Switchboard 46
10.2 Transformer 46
10.3 Low Voltage Main Distribution Switchboard 46
10.4 Two (2) Power Distribution Switchboards (PDC) 46
10.5 Backup Power Supply Unit 47

11. AUTOMATION SYSTEM & SCADA 48
11.1 PLC 01 in Blower house 48
11.2 Touch Panel 01 in Blower house 48
11.3 PLC 02 in Sludge dewatering building 48
11.4 Touch Panel 02 in Sludge dewatering building 49
11.5 SCADA 49
11.6 Servers, 2 pcs 49
11.7 Clients, 2 pcs 50
11.8 Printer A4 50
11.9 Printer A3+ 50
11.10 UPS 50

12. LABORATORY EQUIPMENT 51
12.1 One (1) spectrophotometer for measurement of COD, NH4-N, NO3-N, TN, TP 51
12.2 One (1) dry thermostat 51
12.3 One (1) BOD respirometric apparatus 51
12.4 One (1) cooled incubator 51
12.5 One (1) suspended solids measurement equipment 51
12.6 Two (2) imhoff cones 52
12.7 Nine (3+3+3) measuring cylinders 52
12.8 Nine (3+3+3) graduated pippets 52
12.9 One (1) refrigerator 52

3/12/18
GEORGIOS KARKANIAS
PRESIDENT

1. INLET AND OVERFLOW MANHOLE

1.1 Four (4) penstocks for chambers isolation

- manufacturer	: KARKANIAS SA
- dimensions (W x H)	: 800 x 600 mm
- material	: AISI 304

1.2 Two (2) gravel traps

- manufacturer	: KARKANIAS SA
- dimensions (W x L x H)	: 1000 x 1000 x 400mm
- bar spacing	: 80mm
- material	: AISI 304

1.3 One (1) lifting device for gravel traps

- manufacturer	: KARKANIAS SA
- material	: st37
- lifting capacity	: 1500kg

1.4 One (1) motorized penstock for controlling inflowing quantity of wastewater

- manufacturer	: KARKANIAS SA
- dimensions (W x H)	: 800 x 800 mm
- material	: AISI 304
Gearmotor	
- power	: 0,37KW
- electrical connections	: 400V, 50Hz

1.5 One (1) scum diaphragm

- manufacturer	: KARKANIAS SA
- material	: AISI 304

1.6 One (1) overflow weir

- manufacturer	: KARKANIAS SA
- material	: AISI 304

3/12/18
GEORGIOS KARKANIAS
PRESIDENT

1.7 One (1) ultrasonic flow meter with parshall flume

- manufacturer : SIEMENS
- type : Sitrans LUT 430 (transducer)
  Echomax XRS 5 (sensor)

Ultrasonic transducer with ultrasonic sensor for contactless measurement of fill levels, distances, volumes, flow rates, tendencies or quantities in open sluices, channels or dams with energy saving algorithms and time to spill calculation, preprogrammed arithmetic operations for linearization of Parshall sluices, rectangular sluices, overfall or V dams and half shells, determination of volume as well as control of rainwater, vent pumps and flushing dumps, programming of one universal trace with 40 supporting points, programming by means of local push buttons or EDD or DTM based software, dynamic envelope curve adaptation for echo analysis, automatic suppression of interfering echo, HART communication, data logging, power supply 100 - 230 V AC, output 4 mA – 20 mA, load 600 ohm, 3 relays rated power 5 A at 250 V AC, 2 normally open contacts, 1 changeover contact, accuracy 0.17 %, field enclosure degree of protection IP 65, ambient temperature -20 – +50 °C, LCD display 60 mm x 40 mm with backlighting, parameter backup capability,

Ultrasonic sensor with connecting cable 10 m, measuring range 0.3 – 8 m, beam angle 10°, measuring frequency 44 kHz, degree of protection IP65/IP68, approval according to CE, FM, CSA(US/C), UL, C-TICK, integrated temperature compensation, ambient temperature -20 – +50°C, including operating instructions, mounting material, supply and mount ready-to-operate.

1.8 One (1) automatic station for receiving untreated wastewater samples

- manufacturer : HACH
- type : AS950

Sampler

Housing material: Impact resistant ABS plastic, 3-section construction Double-walled base with 2.54 cm insulation, direct ice contact with bottles (Sampler)

Temperature: Operating: 0 - 49 °C
Storage: -40 - 60 °C

Power requirements (Voltage): 12 V DC

Dimensions (W x H x D) Standard Base: 50.5 cm x 69.4 cm

Weight Standard: 15 kg with (24) 1 L Polyethylene bottles

Controller

Housing material: PC/ABS blend, NEMA 4X, 6, IP68, corrosion and ice resistant (Controller)

Display: 1/4 VGA, Colour; self-prompting/menu-driven program

User interface: Membrane switch keypad with 2 multiple function soft keys

Languages user interface: English, French, Spanish, Italian, German, Portuguese, Chinese

Lock function: Access code protection prevents tampering

Memory: Sample history: 4000 records;

3/12/18

GEORGIOS KARKANIAS
PRESIDENT

Data log: 325,000 records;

Event log: 2000 records

Communication capabilities: USB and optional RS485 (MODBUS)

Inputs: One 0/4-20 mA input for flow pacing

Certifications: CE, UL2

Sample container

(24) 1 L Polyethylene bottles

1.9 Two (2) containers for gravels

- manufacturer	: VAN
- type	: NM-5V
- capacity	: 5m3
- dimensions (W x L x H)	: 1700 x 3000 x 1250mm

1.10 One (1) gravel container chassis with electric drive

- manufacturer	: KARKANIAS SA
- loading capacity	: 9tn

3/12/18

GEORGIOS KARKANIAS
PRESIDENT

2. SEPTAGE UNIT

2.1 One (1) electromotor knife gate valve on the inlet pipeline

- manufacturer : VAG
- type : knife gate

2.2 One (1) gravel trap

- manufacturer : KARKANIAS SA
- dimensions (D x H) : 600 x 600
- material : AISI 304

2.3 One (1) electromagnetic inductive flow meter on the inlet pipeline

- manufacturer : SIEMENS
- type : Sitrans F M MAG 5100 W (sensor)
  : Sitrans F M MAG 5000

Flow sensor

Flowmeter for water and wastewater treatment plants for compact or separate transmitter. NBR hard rubber lining, integrated grounding and measuring electrodes made of Hastelloy C, flange size according to EN 1092-1, ambient temperature -40 – +70 °C, temperature of medium -10 – +70 °C, flange and flowmeter housing made of painted steel, terminal box with cable gland M20, flash memory to save calibration, verification data of sensor, and save customer-specific settings, degree of protection IP 67, approvals PED-97/23EG, removable part as spare, supply and mount ready-to-operate.

Transmitter

Microprocessor-controlled transmitter in compact or offset design in glass fibre-reinforced polyamide housing with backlight, three-line, alphanumeric display for flow, counter for forward, reverse or net flow, indication of flow direction, comprehensive self-diagnostics for error signalling and recording. Keypad with display unit, leak flow volume suppression, measuring principle with constant field pulsing, automatic zero adjustment, flash memory for automatic recording of calibration and verification data of sensor data as well as customer specific settings, measuring error 0.4 %, simultaneous utilization of analog output 0/4 – 20 mA, pulse output, digital input and output, relay output 24 V DC/1 A, as well as electrical isolation of inputs and outputs. Ambient temperature -20 - +60 °C, power supply 24 V DC, degree of protection IP 67, supply and mount ready-to-operate.

3/12/18
GEORGIOS KARKANIAS
PRESIDENT

2.4 One (1) pH and temperature meter on the inlet pipeline

- manufacturer : B&C Electronics

Controller PH6587

- Inputs: pH electrodes (glass or antimony) / ORP electrodes / Pt100 / Pt1000
- Zero: ±2pH, ±100mV, ±5°C, ±9°F
- Sensitivity: 80 ÷ 110 % (70 ÷ 140 % antimony)
- Resolution: 0.01 pH, 1 mV, 0.1 °C/°F
- Accuracy: 0.2 % / Repeatability: 0.1 % / Non-linearity: 0.1 %
- Dual filter software: 0.4 ÷ 50.0 seconds for small and large variations
- Dual analog output: 0-20 mA / 4-20 mA Rmax 600 Ω
- Dual set points HI/LO: ON/OFF - PFM - PWM, SPST relays
- Hysteresis: 0 ÷ 1.40 pH, 0 ÷ 200 mV
- Delay: 0 ÷ 100.0 seconds
- Alarm: SPDT relay with delay 0 ÷ 100.0 seconds
- Cleaning function:
  - off / autoclean / manual, relay SPDT repetition time 0.1 ÷ 100.0 hours
  - cleaning time 1.0 ÷ 60.0 seconds
  - holding time 0.0 ÷20.0 minutes
  - SPST and SPDT relay contacts: 220 V - 5 A resistive load
- Operating temperature: -10 ÷ 60 °C
- Humidity: 95% without condensation
- Power supply: 85 ÷ 264 Vac - 50/60 Hz
- 9 ÷ 36 Vdc, 12 ÷ 24 Vac (option 091.42x)
- Terminal blocks: removable
- Weight: 1360 g
- Enclosure: ABS, IP 65 protection
- Dimensions: 256x230x89 mm
- EMC/RFI conformity: EN 61326

pH electrode SZ 1150

- PTFE double junction, polymeric gel, built-in Pt100.
- Range: 0/12 pH
- Temperature: 0/100 °C
- Pressure: 10 bar
- Body: in PVDF, Military 4-pin connector, 3/4" NPT thread
- Length: 140 mm (45 mm in immersion)

3/12/18

GEORGIOS KARKANIAS
PRESIDENT

2.5 One (1) conductivity meter on the inlet pipeline

- manufacturer : B&C Electronics

Controller C7685

Selectable input from: a. 2 electrodes cells
b. transmitter 080310 and 4 electrodes cells
c. transmitter 080310 and inductive cells

Measurement range: 0.2mS÷40S with conversion capability in %, g/l, Beaume

Constant's cell: 0.1 / 0.2 / 0.5 / 1 / 2 / 5 / 10

Input for temperature measurement: Sensor RTD Pt100

Temperature compensation: Automatic and manual

Digital LCD display

Operation: Automatic and manual

Calibration parameters display

Dual set-point and alarm conditions display

Analog output 0-4/20mA

Dual Set-point with hysteresis, delay, and min/max programmable functions

Dual filter software 0,4/50 sec

Software: 3 access levels, user friendly, keyboard lock, watch-dog

Automatic overload protection and reset

EEPROM parameters storage

Power supply: 220V / 50Hz.

Watertight enclosure BC9616.2 with transparent front door

Protection: IP 65 (NEMA 4X)

Size: 200x200x187 mm

Dimensions: 200x200x187 mm

Probe SZ 3300.1

Graphite Electrode, Applications: From 200 µS to 200 mS.

Cell constant: K = 1 cm-1

Thermocompensator: Pt100

Material in contact with liquids: PES-graphite L=55 mm

Temperature: 100 °C max. at 10 bar, Pressure: 16 bar at 25 °C

Connector: 4-pin, Thread: 3/4" NPT

3/12/18

GEORGIOS KARKANIAS
PRESIDENT

2.6 One (1) automatic cleaned fine screen, drum with screenings screw

- manufacturer : SEFT
- type : STV / C50
- flow : 50-60m3/h
- screenings weight and volume reduction : ≥40-50%
- External structure in stainless steel AISI304L
- Tank in stainless steel AISI304L
- Shaft less spirals in high carbon steel painted RAL 6029
- Bolts in A2
- Anti-wear material: bolted plates in stainless steel AISI304L

- Loading basket diameter: Ø456 mm
- Screw diameter for transport / compaction: Ø219 mm
- Filtration type: rounded holes
- Dimension: Ø10 mm
- Inclination: 35°
- Rectangular outlet spout for screening discharge 325 x 285 mm
- Basket cleaning through nylon bolted brushes
- Inlet: alum. DN100 Perrot w/motorized valve (24V)
- Outlet: alum. DN200 PN10
- Total length: 3.590 mm (motor excluded)
- Discharging height: 1.500 mm from ground level
- Washing system on compaction zone with manual valve
- Washing system on loading zone with manual valve
- Washing system on cesspool inlet zone with manual valve
- PE breathing valve on screw screen tank
- PE pipe for returning liquid of compaction zone
- predisposition for rod level sensor
- limit-switches for opening hatches
- Telescopic support foot in stainless steel AISI 304L
- Eyebolts

Screw

-Motor 1,1 kW, 400V, 50Hz, 3 phases, 4 poles, IP55, F class, 11 rpm, BONFIGLIOLI

3/12/18
GEORGIOS KARKANIAS
PRESIDENT

2.7 One (1) submersible mixer with lifting device in the septage collection tank

- manufacturer of mixer	: WILO
- type	: TR 21.145-4/11 S14
- propeller diameter	: 210mm
- propeller speed	: 1390rpm
- rated power	: 1,3 KW
- power input (duty point)	: 1,2 KW
- maximum power input	: 1,74 KW
- electrical connections	: 400V, 50Hz
- manufacturer of lifting devise	: KARKANIAS SA

2.8 Two (2) submersible pumps in the septage collection tank, one standby

- manufacturer	: WILO
- type	: Rexa PRO V06 DA-623 / EAD1X4-T0015-540-O
- flow	: 5,2m3/h
- head	: 6,4m
- speed	: 1413rpm
- rated power	: 1,5 KW
- power input (duty point)	: 0,71 KW
- maximum power input	: 1,94 KW
- electrical connections	: 400V, 50Hz

2.9 One (1) lifting device (davit) for pumps

- manufacturer	: KARKANIAS SA
- material	: st37
- lifting capacity	: 250kg

3/12/18

GEORGIOS KARKANIAS
PRESIDENT

2.10 One (1) ultrasonic level meter

- manufacturer	: SIEMENS
- type	: Sitrans Probe LU

Ultrasonic transducer with 2-wire technology, for detecting the level and volume of liquids and sludge, continuous measuring from 0.3 to 6 m, frequency 54 kHz, communication over 4 – 20 mA / HART, dynamic envelope adjustment for echo analysis, autom. suppression of interfering echo, ambient temperature -40 – +80 °C, integrated temperature compensation, sensor material PVDF copolymer, plastic housing, cable entry 2x M20 x 1.5, process connection screw thread G 2", EEPROM, programming via infrared receiver without opening the device, alphanumeric LC display, operating instructions, handheld programmer, degree of protection IP 67, including mounting bracket made of stainless steel (1.4301), lock nut, supply and mount ready-to-operate.

2.11 One (1) valve for tank emptying by gravity

- manufacturer	: GEMAK
- type	: gate

2.12 One (1) container for screenings and gravels

- manufacturer	: VAN
- type	: NM-5V
- capacity	: 5m3
- dimensions (W x L x H)	: 1700 x 3000 x 1250mm

2.13 One (1) automatic station for receiving septage

- Switchboard with all functions for automatic operation of the unit, identification and registration of customers. The switchboard is equipped with an automatic control device with industrial-protocol communication.
- Registration units for the receiving, allowing documents on the arrival and quantity of discharged wastewater to be printed
- Customers' magnetic cards that control the electromotor knife gate valve (code 2.1), by the evaluation system of the unit (acc. to the wastewater quality) and from the WWTP control system (e.g. reaching the maximum level in the reserve tank)
- One (1) electrically-driven valve – flushing service water piping

3/12/18

GEORGIOS KARKANIAS
PRESIDENT

2.14 One (1) automatic station for receiving samples of septage

- manufacturer : HACH
- type : AS950

Sampler

Housing material: Impact resistant ABS plastic, 3-section construction Double-walled base with 2.54 cm insulation, direct ice contact with bottles (Sampler)

Temperature: Operating: 0 - 49 °C

Storage: -40 - 60 °C

Power requirements (Voltage): 12 V DC

Dimensions (W x H x D) Standard Base: 50.5 cm x 69.4 cm

Weight Standard: 15 kg with (24) 1 L Polyethylene bottles

Controller

Housing material: PC/ABS blend, NEMA 4X, 6, IP68, corrosion and ice resistant (Controller)

Display: 1/4 VGA, Colour; self-prompting/menu-driven program

User interface: Membrane switch keypad with 2 multiple function soft keys

Languages user interface: English, French, Spanish, Italian, German, Portuguese, Chinese

Lock function: Access code protection prevents tampering

Memory: Sample history: 4000 records;
Data log: 325,000 records;
Event log: 2000 records

Communication capabilities: USB and optional RS485 (MODBUS)

Inputs: One 0/4-20 mA input for flow pacing

Certifications: CE, UL2

Sample container

(24) 1 L Polyethylene bottles

3/12/18

GEORGIOS KARKANIAS
PRESIDENT

3. PUMPING STATION

3.1 Four (4) penstocks for screens isolation

- manufacturer	: KARKANIAS SA
- dimensions (W x H)	: 800 x 1000 mm
- material	: AISI 304

3.2 One (1) automatic cleaned coarse screen (multi rake)

- manufacturer	: KARKANIAS SA
- capacity	: 130lt/s
- bar spacing (slot width)	: 50mm
- discharge height	: 7,5 m
- channel width	: 800mm
- material	: AISI 304
- power	: 2,2KW
- electrical connections	: 400V, 50Hz

3.3 One (1) manual cleaned coarse screen, standby

- manufacturer	: KARKANIAS SA
- capacity	: 130lt/s
- bar spacing (slot width)	: 50mm
- width	: 800 mm
- material	: AISI 304

3.4 One (1) screw conveyor for screenings

- manufacturer	: KARKANIAS SA
- type	: SC
- power	: 0,55KW
- electrical connections	: 400V, 50Hz
- trough material	: AISI304
- screw material	: S355

3/12/18
GEORGIOS KARKANIAS
PRESIDENT

3.5 One (1) ultrasonic differential level meter

- manufacturer : SIEMENS
- type : Sitrans L HydroRanger 200
  Echomax XRS 5 (sensor)

Ultrasonic transducer with 2 ultrasonic sensors, for contactless measurement of fill levels, distances, flows, volumes, and tendencies on rakes, as well as in open sluices, channels or dams, differential measurement, plus alternating pump control of at least 6 pumps in pumping shafts. Preprogrammed arithmetic operations for linearization of venturi sluices, rectangular sluices, overfall or V dams and half shells. Determination of volume as well as control of rainwater, vent pumps and flushing dumps, programming of one universal trace with at least 32 supporting points. Profibus DP communication, dynamic envelope curve adaptation for echo analysis, automatic suppression of interfering echo, input 0 – 20 mA and 4 – 20 mA, output 0 – 20 mA and 4 – 20 mA, load 750 ohm, 6 relays, rated power 5 A at 250 V AC, 2 normally open contacts, 1 changeover contact, accuracy 0.25 % of MR, ambient temperature -20 – +50 °C, field enclosure degree of protection IP 65, display 100 mm x 40 mm LCD with backlighting, auxiliary power 24 V DC.

Two separate measuring points at a distance of at least 10 m, measuring range 0.3 – 8 m, beam angle 10°, frequency 44 kHz, integrated temperature compensation, IP 68, with approval according to ATEX II 2 G of the sensors, including mounting bracket made of stainless steel (1.4301), operating instructions, supply and mount ready-to-operate.

3.6 One (1) container for screenings

- manufacturer : VAN
- type : NM-5V
- capacity : 5m3
- dimensions (W x L x H) : 1700 x 3000 x 1250mm

3.7 One (1) screenings container chassis with electric drive

- manufacturer : KARKANIAS SA
- loading capacity : 9tn

3/12/18
GEORGIOS KARKANIAS
PRESIDENT

3.8 Three (3) submersible pumps in pumping station, one standby

- manufacturer	: WILO
- type	: Rexa PRO C08 DA-435 / EAD1X2-T0039-540-O
- flow	: 51,4m3/h
- head	: 15,6m
- speed	: 2879rpm
- rated power	: 3,9 KW
- power input (duty point)	: 3,8 KW
- maximum power input	: 4,85 KW
- electrical connections	: 400V, 50Hz

3.9 Three (3) frequency converters (inverters) for pumps

- manufacturer	: SIEMENS
- type	: SINAMICS G120C
- power	: 5,5KW

3.10 One (1) electromagnetic inductive flow meter on pumping discharge pipe

- manufacturer	: SIEMENS
- type	: Sitrans F M MAG 5100 W (sensor)
	: Sitrans F M MAG 5000

Flow sensor

Flowmeter for water and wastewater treatment plants for compact or separate transmitter. NBR hard rubber lining, integrated grounding and measuring electrodes made of Hastelloy C, flange size according to EN 1092-1, ambient temperature -40 – +70 °C, temperature of medium -10 – +70 °C, flange and flowmeter housing made of painted steel, terminal box with cable gland M20, flash memory to save calibration, verification data of sensor, and save customer-specific settings, degree of protection IP 67, approvals PED-97/23EG, removable part as spare, supply and mount ready-to-operate.

Transmitter

Microprocessor-controlled transmitter in compact or offset design in glass fibre-reinforced polyamide housing with backlight, three-line, alphanumeric display for flow, counter for forward, reverse or net flow, indication of flow direction, comprehensive self-diagnostics for error signalling and recording. Keypad with display unit, leak flow volume suppression, measuring principle with constant field pulsing, automatic zero adjustment, flash memory for automatic recording of calibration and verification data of sensor data as well as customer specific settings, measuring error 0.4 %, simultaneous utilization of analog output 0/4 – 20 mA, pulse output, digital input and output, relay output 24 V DC/1 A, as well as electrical isolation of inputs and outputs. Ambient temperature -20 - +60 °C, power supply 24 V DC, degree of protection IP 67, supply and mount ready-to-operate.

3/12/18
GEORGIOS KARKANIAS
PRESIDENT

3.11 One (1) ultrasonic level meter

- manufacturer : SIEMENS
- type : Sitrans Probe LU

Ultrasonic transducer with 2-wire technology, for detecting the level and volume of liquids and sludge, continuous measuring from 0.3 to 6 m, frequency 54 kHz, communication over 4 – 20 mA / HART, dynamic envelope adjustment for echo analysis, autom. suppression of interfering echo, ambient temperature -40 – +80 °C, integrated temperature compensation, sensor material PVDF copolymer, plastic housing, cable entry 2x M20 x 1.5, process connection screw thread G 2", EEPROM, programming via infrared receiver without opening the device, alphanumeric LC display, operating instructions, handheld programmer, degree of protection IP 67, including mounting bracket made of stainless steel (1.4301), lock nut, supply and mount ready-to-operate.

3.12 One (1) lifting device (monorail) for pumping station

- manufacturer : KARKANIAS SA
- material : st37
- lifting capacity : 500kg

3.13 One (1) scum diaphragm for floating substances

- manufacturer : KARKANIAS SA
- material : AISI 304

3.14 One (1) penstock

- manufacturer : KARKANIAS SA
- dimensions (W x H) : 800 x 800 mm
- material : AISI 304

3/12/18

GEORGIOS KARKANIAS
PRESIDENT

4. MECHANICAL WASTEWATER PRETREATMENT UNIT

4.1 Two (2) valves on by pass pipeline and inlet pipeline

- manufacturer : GEMAK
- type : gate

4.2 One (1) compact mechanical pretreatment unit

- manufacturer : SEFT
- type : GDF / D30 - FCP/C50
- flow : 30lt/sec
- screenings weight and volume reduction : ≥30-40%
- efficiency for sand removal (particles>200μm) and density above 1,65 Kg/dm3 : ≥90%

Screw screen FCP/C 50 with compaction

- Loading basket diameter: Ø456 mm
- Screw diameter for transport / compaction: Ø219 mm
- Filtration type: rounded holes
- Dimension: Ø6 mm
- Inclination: 35°
- Squared outlet spout for screening discharge
- Basket cleaning through nylon bolted brushes
- Motor 1,1 kW, 400V – 50Hz – 3 phases, 4 poles, IP55, F class
- Gear reducer, endless screw, 11 rpm

Sand settling tank

Horizontal screw conveyor and sand transport mod. TSA 200

- Shaft less screw diameter: Ø180mm
- High carbon steel single profile, pitch 1/1, thick. 20mm
- With mechanical water tight group
- Motor 0,55 kW, 400V – 50Hz – 3 phases, 4 poles, IP55, F class
- Gear reducer, endless screw, 5 rpm

3/12/18
GEORGIOS KARKANIAS
PRESIDENT

Sand extraction screw conveyor mod. TSA"T" 168

- Shaft less screw diameter: Ø168mm
- High carbon steel single profile, pitch 1/1, thick. 20mm
- With mechanical water tight group
- Motor 0,37 kW, 400V – 50Hz – 3 phases, 4 poles, IP55, F class
- Gear reducer, endless screw, 5 rpm

Air blowing system

Electrical Blower

Flow rate: 25 m3/h

Pressure: 150 mbar

Motor: 0,25 kW, 380V, 50hz, 3phases, IP55 grade, F class

1" fitting

Side installation, with stainless steel hoses

Retention valve, Suction filter, Pressure valve

Wiring and installation included

Grease / Oil removal "go & back carriage" system

Motor 0,37 kW, 400V – 50Hz – 3 phases, 4 poles, IP55, F class

External structure in stainless steel AISI316 L

Tanks in stainless steel AISI316 L

Shaft less spirals in high carbon steel painted RAL6029

Bolts in A2

Anti-wear material: bolted plates in stainless steel AISI316 L

Inlet: alum. DN250 PN10

Outlet: alum. DN250 PN10

Degreasing outlet: Flanged alum. DN100 PN10

Overall dimensions:

Total length: 6955 mm

Settling tank length: 6.000 mm

Total width: 1.420 mm

Total height after installation: 3.055 mm

3/12/18

GEORGIOS KARKANIAS
PRESIDENT

Grease Pump

Manufacturer: SYDEX

Flow rate: 400 lt/h (90rpm)

Pressure: 4 bar

Motor: 1,1 kW, 2,45A, 380V, 50hz, 3phases, IP55

Control panel

PLC Protection degree IP65, 400 V

In fiberglass with buttons at sight + Emergency button

Manual start/stop and automatic cycle start/stop selectors

Warning lights for: line presence, machine running, thermal alarm

Documentation: control panel electrical diagram + CE conformity declaration

Predisposition for remote control for start/stop with thermal alarm signal

Wiring included

Ventilation (if necessary)

Heating included

Consumption and working hours

Communication card for industrial protocol included

4.3 Four (2+2) containers for screenings and sand

- manufacturer	: VAN
- type	: NM-5V
- capacity	: 5m3
- dimensions (W x L x H)	: 1700 x 3000 x 1250mm

4.4 One (1) screenings container chassis with electric drive

- manufacturer	: KARKANIAS SA
- loading capacity	: 9tn

4.5 One (1) sand container chassis with electric drive

- manufacturer	: KARKANIAS SA
- loading capacity	: 9tn

3/12/18

GEORGIOS KARKANIAS
PRESIDENT

5. BIOLOGICAL TREATMENT PROCESS

5.1 FLOW DISTRIBUTION CHAMBER I

5.1.1 One (1) overflow weir for flow distribution

- manufacturer	: KARKANIAS SA
- material	: AISI 304

5.1.2 One (1) valve on pipeline

- manufacturer	: GEMAK
- type	: gate

5.1.3 One (1) overflow telescopic valve for by pass

- manufacturer	: KARKANIAS SA
- material	: AISI 304

5.2 PREDENITRIFICATION TANK

5.2.1 One (1) submersible mixer with lifting device in the predenitrification tank

- manufacturer of mixer	: WILO
- type	: TR 50-2.34-4/12 S
- propeller diameter	: 500mm
- propeller speed	: 338rpm
- rated power	: 4,5 KW
- power input (duty point)	: 4,4 KW
- maximum power input	: 5,8 KW
- electrical connections	: 400V, 50Hz
- manufacturer of lifting devise	: KARKANIAS SA

3/12/10

GEORGIOS KARKANIAS
PRESIDENT

5.3 CIRCULATING ACTIVATED SLUDGE TANK

5.3.1 Two (2) submersible mixers with lifting devices, one per corridor

- manufacturer of mixer	: XYLEM
- type	: SR 4410 400
- propeller diameter	: 2500mm
- propeller speed	: 27rpm
- rated power	: 2,3 KW
- power input (duty point)	: 1,78 KW
- maximum power input	: 3,10 KW
- electrical connections	: 400V, 50Hz
- manufacturer of lifting devise	: KARKANIAS SA

5.3.2 Two (2) rotary lobe blowers for aeration, one standby, with noise covers

- manufacturer	: ROBUSCHI
- type	: ES65/2P
- flow	: 776Nm3/h
- differential pressure	: 620mbar
- blower speed	: 3366rpm
- motor speed	: 2945rpm
- Absorbed power	: 22 KW
- Input power	: 30 KW
- electrical connections	: 400V, 50Hz
- sound pressure level	: 74dBA

5.3.3 Two (2) frequency converters (inverters) for blowers

- manufacturer	: SIEMENS
- type	: SINAMICS G 120C
- power	: 30KW

5.3.4 One (1) lifting device (monorail) for blowers

- manufacturer	: KARKANIAS SA
- lifting capacity	: 1000kg

3/12/18
GEORGIOS KARKANIAS
PRESIDENT

5.3.5 One (1) fan for ventilation of blowers building

- manufacturer	: Soler & Palau (S&P)
- type	: HCFT/4-400/H
- flow	: 5070 m3/hr
- speed	: 1350 rpm
- power	: 300W
- electrical connections	: 400V, 50Hz

5.3.6 One (1) main air pipeline

- manufacturer	: KARKANIAS SA
- material	: AISI 304
- diameter	: DN150

5.3.7 Two (2) air distribution pipes with batterfly valves for flow control or isolation

- manufacturer	: KARKANIAS SA / EFFEBI
- material	: AISI 304
- diameter	: DN100

5.3.8 Two (2) air grids for diffusers

- manufacturer	: KARKANIAS SA
- material	: PVC, 10atm
- diameter	: Φ110

5.3.9 One hundred and ninety two (192) fine bubble membrane diffusers (disc type), ninety six per grid

- manufacturer	: XYLEM / SANITAIRE
- material	: EPDM
- diameter	: 229mm
- flow (duty point)	: 4,03m3/h
- efficiency	: 31%

5.3.10 One (1) overflow weir

- manufacturer	: KARKANIAS SA
- material	: AISI 304

3/12/18

GEORGIOS KARKANIAS
PRESIDENT

5.3.11 One (1) dissolved oxygen meter

- manufacturer : HACH
- type : SC1000/ LDO sc

Digital Controller SC1000 (consisting of probe module and retractable digital display)
Connection with 4 digital Hach sc probes
Operating Temperature Range: -20 to 55 °C, 0 to 95% relative humidity, non-condensing
Storage Conditions: -20 to 70 °C, 0 to 95% relative humidity, non-condensing
Power Requirements (Voltage): 100 - 240 V AC, 24 V DC
Power Requirements (Hz): 50/60 Hz
Display: 1/4 inch VGA graphical backlit TFT color Glas/Glas-Touch screen, high resistance, 320 x 240 pixels
Display Viewing Area: 11.4 x 8.6 cm (4.5 x 3.4 in)
Alarm: Low alarm point, low alarm point deadband, high alarm point, high alarm point deadband, off delay, and on delay
Relays: Up to four SPDT, user-configurable contacts rated 100 to 230 VAC, 5 Amp resistive maximum per probe module. Additional relays are available with additional probe modules.
Inputs: Up to 12 analog 0-20 mA, maximum impedance 500 Ohms per probe module. Additional analog inputs are available with additional probe modules.
Outputs: Up to 12 analog 0/4-20 mA, maximum impedance 500 Ohms per probe module. Additional analog outputs with additional probe modules. Optional digital communcations via Modbus® (RS485) and Profibus® DP/V1.
Communication: Modbus® (RS485): Advanced communications/networking with PLC or SCADA system directly from analyzer
Profibus® DP/V1 (certified)
GSM/GPRS Quad-band cellular module (FCC and IC approved, EU and US only)
Ethernet service port, RJ45, 10 MB/s
Mounting Configurations: Surface, panel, and pipe (horizontal and vertical) with optional sun shield
Enclosure Rating: IP65
Material Enclosures: ABS (display module) and metal (probe module) enclosure with corrosion resistant finish
Dimensions Metric (H x W X D): 150 mm x 315 mm x 250 mm
European Certifications: CE per 73/23/EEC and 89/336/EEC
TUV-GS to EN 61010-1
EN 61326 Amd's 1 & 2

3/12/18
GEORGIOS KARKANIAS
PRESIDENT

Sensor (LDO sc)

Dimensions (D x L): 48.25mm x 254mm

Response time: T90 < 40 s

T95 < 60 s

Flow rate: No flow rate required

Resolution: 0.01 mg/L (ppm) O2/0.1% saturation

Operating temperature: 0 to 50 °C

Pressure range: max. 10 bar

Weight: 1.0 kg

Interferences No interferences by: H_2S, pH, K^+, Na^+, Mg^{2+}, Ca^{2+}, NH_4^+, Al^{3+}, Pb^{2+}, Cd^{2+}, Zn^{2+}, Cr (total), Fe^{2+}, Fe^{3+}, Mn^{2+}, Cu^{2+}, Ni^{2+}, Co^{2+}, CN^-, NO_3^-, SO_4^{2-}, S^{2-}, PO_4^{3-}, Cl^- anionic surfactants, crude oils or Cl_2 < 4ppm

Cable length: 10 m

Storage temperature: -20 to 70 °C (95% relative humidity)

Materials Sensor cap: acrylic

Probe body: CPVC, polyurethane, viton, noryl, stainless steel 1.4404 (AISI 316L)

Measuring range: 0 to 20.00 mg/L (ppm) DO, 0 to 200% saturation

Accuracy: Below 5 mg/L O_2 0.1 mg/L

Above 5 mg/L O_2 0.2 mg/L

Enclosure rating: IP 68

Sensor connector: 1 " NPT external thread

Temperature accuracy: 0.2 °C

Repeatability: 0.1 mg/L

3/12/18

GEORGIOS KARKANIAS
PRESIDENT

5.3.12 One (1) MLSS meter

- manufacturer	: HACH
- type	: Solitax sc ts-line
- parameters	: Suspended Solids/ turbidity
- measurement procedure	: Solids - Equivalent to DIN 37414 Turbidity DIN EN ISO 7027 DIN EN ISO 7027
-measuring range	: Solids: 0.001 - 50 g/l Turbidity: 0.001 - 4,000 FNU
-accuracy	: Solids - <5% Turbidity <1% or 0.001
- response time	: 1 - 300 sec
- sample temperature	: 0 - 40 °C
- flow rate	: 3 m/s
- immersion depth	: 0.1 - 10 m
- pressure range	: 1 bar
- dimensions (D x L)	: 60 x 200 mm
- housing	: stainless steel
- automatic Cleaning	: With automatic wiper
- cable length	: 10 m fixed, max. 100 m extension cable

5.3.13 One (1) mixer (vertical shaft) in outlet manhole of the tank

- manufacturer	: KARKANIAS SA
- material	: AISI 304
- propeller speed	: 49rpm
Gearmotor	
- manufacturer	: BONFIGLIOLI
- type (gear / motor)	: VF49_28 / P71 BN71B4
- motor speed	: 1400rpm
- power	: 0,37KW
- electrical connections	: 400V, 50Hz

8/12/18
GEORGIOS KARKANIAS
PRESIDENT

5.4 FLOW DISTRIBUTION CHAMBER II

5.4.1 One (1) overflow weir for flow distribution

- manufacturer	: KARKANIAS SA
- material	: AISI 304

5.4.2 One (1) valve on pipeline

- manufacturer	: GEMAK
- type	: gate

5.4.3 One (1) overflow telescopic valve for by pass

- manufacturer	: KARKANIAS SA
- material	: AISI 304

5.5 FINAL SETTLING TANK

5.5.1 One (1) rotated radial bridge with bottom and surface scrapers

- manufacturer	: KARKANIAS SA
- material (scrapers and all submerged parts)	: AISI 304
- material (bridge)	: hot-dip galvanized steel
- bridge width	: 800mm
Gearmotor	
- manufacturer	: BONFIGLIOLI
- type (gear / motor)	: MVF44_86FC_700 / P71 BN71B4
- motor speed	: 1400rpm
- power	: 0,37KW
- electrical connections	: 400V, 50Hz, IP55

5.5.2 One (1) scum skimmer

- manufacturer	: KARKANIAS SA
- material	: AISI 304

5.5.3 One (1) influent well

- manufacturer	: KARKANIAS SA
- material	: AISI 304
- dimensions (D x H)	: 2500 x 1250 mm

3/12/18

GEORGIOS KARKANIAS
PRESIDENT

5.5.4 One (1) circumferential overflow weir (V- notch)

- manufacturer	: KARKANIAS SA
- material	: AISI 304
- V dimensions (length x depth x pitch)	: 100 x 50 x 150 mm
- height	: 250 mm

5.5.5 One (1) circumferential scum diaphragm

- manufacturer	: KARKANIAS SA
- material	: AISI 304
- height	: 400 mm

5.6 RETURN ACTIVATED SLUDGE AND EXCESS SULDGE PUMPING STATION

5.6.1 Two (2) submersible pumps for return sludge, one standby

- manufacturer	: WILO
- type	: Rexa PRO C10 DA-518/ EAD0X4-T0035-540-O
- flow	: 99,8m3/h
- head	: 7,7m
- speed	: 1393rpm
- rated power	: 3,45 KW
- power input (duty point)	: 3,75 KW
- maximum power input	: 4,45 KW
- electrical connections	: 400V, 50Hz

5.6.2 Two (2) frequency converters (inverters) for return sludge pumps

- manufacturer	: SIEMENS
- type	: SINAMICS G 120C
- power	: 5,5KW

3/12/18
GEORGIOS KARKANIAS
PRESIDENT

5.6.3 One (1) electromagnetic inductive flow meter for return sludge

- manufacturer : SIEMENS
- type : Sitrans F M MAG 5100 W (sensor)
  : Sitrans F M MAG 5000

Flow sensor

Flowmeter for water and wastewater treatment plants for compact or separate transmitter. NBR hard rubber lining, integrated grounding and measuring electrodes made of Hastelloy C, flange size according to EN 1092-1, ambient temperature -40 – +70 °C, temperature of medium -10 – +70 °C, flange and flowmeter housing made of painted steel, terminal box with cable gland M20, flash memory to save calibration, verification data of sensor, and save customer-specific settings, degree of protection IP 67, approvals PED-97/23EG, removable part as spare, supply and mount ready-to-operate.

Transmitter

Microprocessor-controlled transmitter in compact or offset design in glass fibre-reinforced polyamide housing with backlight, three-line, alphanumeric display for flow, counter for forward, reverse or net flow, indication of flow direction, comprehensive self-diagnostics for error signalling and recording. Keypad with display unit, leak flow volume suppression, measuring principle with constant field pulsing, automatic zero adjustment, flash memory for automatic recording of calibration and verification data of sensor data as well as customer specific settings, measuring error 0.4 %, simultaneous utilization of analog output 0/4 – 20 mA, pulse output, digital input and output, relay output 24 V DC/1 A, as well as electrical isolation of inputs and outputs. Ambient temperature -20 - +60 °C, power supply 24 V DC, degree of protection IP 67, supply and mount ready-to-operate.

5.6.4 One (1) ultrasonic level meter

- manufacturer : SIEMENS
- type : Sitrans Probe LU

Ultrasonic transducer with 2-wire technology, for detecting the level and volume of liquids and sludge, continuous measuring from 0.3 to 6 m, frequency 54 kHz, communication over 4 – 20 mA / HART, dynamic envelope adjustment for echo analysis, autom. suppression of interfering echo, ambient temperature -40 – +80 °C, integrated temperature compensation, sensor material PVDF copolymer, plastic housing, cable entry 2x M20 x 1.5, process connection screw thread G 2", EEPROM, programming via infrared receiver without opening the device, alphanumeric LC display, operating instructions, handheld programmer, degree of protection IP 67, including mounting bracket made of stainless steel (1.4301), lock nut, supply and mount ready-to-operate.

5.6.5 Two (2) lifting devices (davit) for pumps, one for excess sludge pumps and one for return sludge pumps

- manufacturer : KARKANIAS SA
- material : st37
- lifting capacity : 250kg

3/12/18

GEORGIOS KARKANIAS
PRESIDENT

5.6.6 Two (2) submersible pumps for excess sludge, one standby

- manufacturer	: WILO
- type	: Rexa PRO V05 DA-222/ EAD1X2-T0025-540-O
- flow	: 26,1m3/h
- head	: 10,1m
- speed	: 2848rpm
- rated power	: 2,5 KW
- power input (duty point)	: 2,2 KW
- maximum power input	: 3,2 KW
- electrical connections	: 400V, 50Hz

5.6.7 Two (2) frequency converters (inverters) for excess sludge pumps

- manufacturer	: SIEMENS
- type	: SINAMICS G 120C
- power	: 4KW

5.6.8 One (1) electromagnetic inductive flow meter for excess sludge

- manufacturer	: SIEMENS
- type	: Sitrans F M MAG 5100 W (sensor)
	: Sitrans F M MAG 5000

Flow sensor

Flowmeter for water and wastewater treatment plants for compact or separate transmitter. NBR hard rubber lining, integrated grounding and measuring electrodes made of Hastelloy C, flange size according to EN 1092-1, ambient temperature -40 – +70 °C, temperature of medium -10 – +70 °C, flange and flowmeter housing made of painted steel, terminal box with cable gland M20, flash memory to save calibration, verification data of sensor, and save customer-specific settings, degree of protection IP 67, approvals PED-97/23EG, removable part as spare, supply and mount ready-to-operate.

Transmitter

Microprocessor-controlled transmitter in compact or offset design in glass fibre-reinforced polyamide housing with backlight, three-line, alphanumeric display for flow, counter for forward, reverse or net flow, indication of flow direction, comprehensive self-diagnostics for error signalling and recording. Keypad with display unit, leak flow volume suppression, measuring principle with constant field pulsing, automatic zero adjustment, flash memory for automatic recording of calibration and verification data of sensor data as well as customer specific settings, measuring error 0.4 %, simultaneous utilization of analog output 0/4 – 20 mA, pulse output, digital input and output, relay output 24 V DC/1 A, as well as electrical isolation of inputs and outputs. Ambient temperature -20 - +60 °C, power supply 24 V DC, degree of protection IP 67, supply and mount ready-to-operate.

3/12/18

GEORGIOS KARKANIAS
PRESIDENT

5.6.9 One (1) valve on sludge pipeline

- manufacturer	: GEMAK
- type	: gate

5.7 CHEMICAL PHOSPHORUS PRECIPITATION

5.7.1 Three (3) dosing (diaphragm) pumps for phosphorus precipitation chemical solution, one standby, with pipes and valves

- manufacturer	: GRUNDFOS
- type	: DDA30-4
- flow	: 30lt/h
- pressure	: 4bar
- power	: 24W
- electrical connections	: 240V, 50Hz, IP65
- dosing head material	: PVC (Polyvinyl chloride)
- valve ball material	: Ceramic
- gasket material	: FKM
- analog control 0/4-20 mA (scalable)	

5.7.2 One (1) electromagnetic inductive flow meter for phosphorus precipitation chemical solution

- manufacturer	: SIEMENS
- type	: Sitrans F M MAG 5100 W (sensor)
	: Sitrans F M MAG 5000

Flow sensor

Flowmeter for water and wastewater treatment plants for compact or separate transmitter. NBR hard rubber lining, integrated grounding and measuring electrodes made of Hastelloy C, flange size according to EN 1092-1, ambient temperature -40 – +70 °C, temperature of medium -10 – +70 °C, flange and flowmeter housing made of painted steel, terminal box with cable gland M20, flash memory to save calibration, verification data of sensor, and save customer-specific settings, degree of protection IP 67, approvals PED-97/23EG, removable part as spare, supply and mount ready-to-operate.

Transmitter

Microprocessor-controlled transmitter in compact or offset design in glass fibre-reinforced polyamide housing with backlight, three-line, alphanumeric display for flow, counter for forward, reverse or net flow, indication of flow direction, comprehensive self-diagnostics for error signalling and recording. Keypad with display unit, leak flow volume suppression, measuring principle with constant field pulsing, automatic zero adjustment, flash memory for

3/12/18

GEORGIOS KARKANIAS
PRESIDENT

automatic recording of calibration and verification data of sensor data as well as customer specific settings, measuring error 0.4 %, simultaneous utilization of analog output 0/4 – 20 mA, pulse output, digital input and output, relay output 24 V DC/1 A, as well as electrical isolation of inputs and outputs. Ambient temperature -20 - +60 °C, power supply 24 V DC, degree of protection IP 67, supply and mount ready-to-operate.

5.7.3 One (1) double-walled reservoir for phosphorus precipitation chemical solution, with three level switches

- capacity	: 15.000lt
- material	: HDPE
- dimensions (D x H)	: 2750 x 3050 mm

5.7.4 Two (2) pumps (magnetic driven, plastic, centrifugal) for chemical solution, one standby

- manufacturer	: MPumps
- type	: CM MAG P15
- flow	: 15m3/h
- manometric height	: 12m
- speed	: 2900rpm
- power	: 1,1KW
- electrical connections	: 400V, 50Hz, IP55
- material (body, cover, impeller)	: Polypropylene

3/12/18
GEORGIOS KARKANIAS
PRESIDENT

6. FILTRATION UNIT

6.1 One (1) overflow penstock for filter tank flow distribution and isolation

- manufacturer : KARKANIAS SA
- dimensions (W x H) : 800 x 500 mm
- material : AISI 304

6.2 One (1) penstock for bypass

- manufacturer : KARKANIAS SA
- dimensions (W x H) : 500 x 500 mm
- material : AISI 304

6.3 One (1) automatic cleaned microscreen rotary drum filter for wastewater tertiary treatment

- manufacturer : IN EKO Team sro
- type : 3FBB
- flow : max 50lt/sec
- overall filtration surface : 3,75m2
- active filtration surface : 2,39m2
- power : 2,37KW
- electrical connections : 400V, 50Hz
- filtration cloth pores (size of mesh) : 40μm
- filtration cloth material : polyamid
- filter material (frame) : AISI 304

drum dimensions

- diameter : 930mm
- length : 1500mm

Tank dimensions

- width : 1150m
- length : 2800m
- height : 1250m

3/12/18

GEORGIOS KARKANIAS
PRESIDENT

- level switches (3items)
- control cabinet (1item)
- backwashing system
- washing pump (1item)
- drainage (sludge) pump (1item)

Outlet overflow weir

- material : AISI 304

3/12/18

GEORGIOS KARKANIAS
PRESIDENT

7. UV DISINFECTION UNIT - EFFLUENT

7.1 Two (2) overflow penstocks for UV channel isolation

- manufacturer	: KARKANIAS SA
- dimensions (W x H)	: 612 x 600 mm
- material	: AISI 304

7.2 One (1) UV disinfection automatic cleaned system

- manufacturer	: ULTRAQUA
- type	: MR16-220SS channel
- flow	: 108m3/h (30lt/sec)
- design UV transmittance pr 10 mm, UVT	: 70%
- design UV dose, EOLL	: > 85 mJ/cm2
- calculated UV dose, EOLL	: 86,3 mJ/cm2
- wastewater temperature	: 5 - 35 °C
- fecal Coliforms (F.C.) UV inlet	: 100.000 CFU/100ml
- fecal Coliforms (F.C.) UV outlet	: ≤ 20 CFU/100ml (95% of samples)
- number of UV-lamps	: 16
- reactor material	: AISI316L
- minor parts materials	: PTFE/PVDF/VITON/POM
- water depth	: 1120-1400mm (vertical)
- channel width	: 604 +/-8,0mm
- reactor configuration	: 1 bank with 16 lamps
- lamp type	: low pressure high output amalgam
- lamp life time	: 16000 h
- wire coating	: PTFE
- lamp power pr. Lamp	: 220W
- power	: 3,8 kW
- temperature sensor	: Danfoss pT100

Outlet overflow weir

- material	: AISI 304

3/12/18

GEORGIOS KARKANIAS
IDENT

Lamp drivers (ballasts)	
no of drivers pr. system	4
product	4x220W UltraAqua 220W series
type	electronic HF modbus controlled
serial communication	modbus Daisy chain RJ45 wiring
power Factor	> 0.98
efficiency	95% at nominal power
continuous monitoring	individual electrical lamp parameters
protection	ground fault, temperature, input voltage
On-board diagnosis	LED indicators
Manufactured in	Holland
Control cabinet	
Material	GFRP (optional Stainless steel AISI304)
HMI	3.4" touch sensitive menu driven screen
System control	PLC
Installation	Wall mount
Cabinet dimension	700x500x300mm
Lamp cable length	5,0m (max length 30,0m)
Lamp cable type	Silicon acc.UL Style 4476 and CSA AWM II A/B
Power supply	3x400VAC+N+Pe,47-63 Hz
Power	3,9 kW @ 100% power level
Temperature	0-45 °C
Thermal control	Forced cooling
Rel. humidity	20-95% non-condensing
Enclosure type	IP54 (Optional IP55-IP68)
Approval	CE
Manufactured in	Denmark

3/12/18

GEORGIOS KARKANIAS
PRESIDENT

7.3 One (1) ultrasonic flow meter with parshall flume

- manufacturer : SIEMENS
- type : Sitrans LUT 430 (transducer)
  Echomax XRS 5 (sensor)

Ultrasonic transducer with ultrasonic sensor for contactless measurement of fill levels, distances, volumes, flow rates, tendencies or quantities in open sluices, channels or dams with energy saving algorithms and time to spill calculation, preprogrammed arithmetic operations for linearization of Parshall sluices, rectangular sluices, overfall or V dams and half shells, determination of volume as well as control of rainwater, vent pumps and flushing dumps, programming of one universal trace with 40 supporting points, programming by means of local push buttons or EDD or DTM based software, dynamic envelope curve adaptation for echo analysis, automatic suppression of interfering echo, HART communication, data logging, power supply 100 - 230 V AC, output 4 mA – 20 mA, load 600 ohm, 3 relays rated power 5 A at 250 V AC, 2 normally open contacts, 1 changeover contact, accuracy 0.17 %, field enclosure degree of protection IP 65, ambient temperature -20 – +50 °C, LCD display 60 mm x 40 mm with backlighting, parameter backup capability,

Ultrasonic sensor with connecting cable 10 m, measuring range 0.3 – 8 m, beam angle 10°, measuring frequency 44 kHz, degree of protection IP65/IP68, approval according to CE, FM, CSA(US/C), UL, C-TICK, integrated temperature compensation, ambient temperature -20 – +50°C, including operating instructions, mounting material, supply and mount ready-to-operate.

7.4 One (1) automatic station for receiving treated wastewater samples

- manufacturer : HACH
- type : AS950

Sampler

Housing material: Impact resistant ABS plastic, 3-section construction Double-walled base with 2.54 cm insulation, direct ice contact with bottles (Sampler)

Temperature: Operating: 0 - 49 °C
Storage: -40 - 60 °C

Power requirements (Voltage): 12 V DC

Dimensions (W x H x D) Standard Base: 50.5 cm x 69.4 cm

Weight Standard: 15 kg with (24) 1 L Polyethylene bottles

Controller

Housing material: PC/ABS blend, NEMA 4X, 6, IP68, corrosion and ice resistant (Controller)

Display: 1/4 VGA, Colour; self-prompting/menu-driven program

User interface: Membrane switch keypad with 2 multiple function soft keys

Languages user interface: English, French, Spanish, Italian, German, Portuguese, Chinese

Lock function: Access code protection prevents tampering

Memory: Sample history: 4000 records;

3/12/18

GEORGIOS KARKANIAS
PRESIDENT

Data log: 325,000 records;

Event log: 2000 records

Communication capabilities: USB and optional RS485 (MODBUS)

Inputs: One 0/4-20 mA input for flow pacing

Certifications: CE, UL2

Sample container

(24) 1 L Polyethylene bottles

7.5 One (1) submersible pump for service water tank

- manufacturer	: WILO
- type	: Rexa PRO V05 DA-222/ EAD1X2-T0025-540-O
- flow	: 12,8m3/h
- head	: 13,8m
- speed	: 2848rpm
- rated power	: 2,5 KW
- power input (duty point)	: 1,6 KW
- maximum power input	: 3,2 KW
- electrical connections	: 400V, 50Hz

7.6 Three (3) level switches for submersible pump operation

7.7 One (1) lifting device for submersible pump

- manufacturer	: KARKANIAS SA
- material	: st37
- lifting capacity	: 250kg

7.8 One (1) overflow weir in UV outlet manhole

- manufacturer	: KARKANIAS SA
- material	: AISI 304

3/12/18

GEORGIOS KARKANIAS
PRESIDENT

8. SLUDGE TREATMENT UNITS

8.1 SLUDGE AEROBIC STABILISATION AND THICKENING TANK

8.1.1 One (1) submersible mixer with lifting device

- manufacturer of mixer	: WILO
- type	: TR 36.145-4/12 S17
- propeller diameter	: 250mm
- propeller speed	: 1400rpm
- rated power	: 4,5 KW
- power input (duty point)	: 4,95 KW
- maximum power input	: 5,8 KW
- electrical connections	: 400V, 50Hz
- manufacturer of lifting devise	: KARKANIAS SA

8.1.2 One (1) submersible jet aerator, with one extra pump stock

- manufacturer	: WILO
- type	: J- OXY 250 2/150/95 35(50) Pump FA 20.54E T24 - 4/29K
- air flow	: 620Nm3/hr
- sludge height	: 4,5m
- speed	: 1450rpm
- power	: 25KW
- electrical connections	: 400V, 50Hz
- jet diameter	: 2 * DN150

8.1.3 One (1) ultrasonic level meter

- manufacturer	: SIEMENS
- type	: Sitrans Probe LU

Ultrasonic transducer with 2-wire technology, for detecting the level and volume of liquids and sludge, continuous measuring from 0.3 to 6 m, frequency 54 kHz, communication over 4 – 20 mA / HART, dynamic envelope adjustment for echo analysis, autom. suppression of interfering echo, ambient temperature -40 – +80 °C, integrated temperature compensation, sensor material PVDF copolymer, plastic housing, cable entry 2x M20 x 1.5, process connection screw thread G 2", EEPROM, programming via infrared receiver without opening the device, alphanumeric LC display, operating instructions, handheld programmer, degree of protection IP 67, including mounting bracket made of stainless steel (1.4301), lock nut, supply and mount ready-to-operate.

3/12/18

GEORGIOS KARKANIAS
PRESIDENT

8.1.4 Three (3) level switches

8.1.5 One (1) lifting device for jet aerator

- manufacturer	: KARKANIAS SA
- material	: st37
- lifting capacity	: 500kg

8.1.6 Two (2) drainage overflow pipes with gate valves

- manufacturer (pipe / valve)	: KARKANIAS SA / GEMAK
- pipe material	: AISI 304

8.1.7a Two (2) macerators

- manufacturer	: NOV PROCESS (MONO PUMPS)
- type	: MUNCHER CT201DAW*B2
- flow (max)	: 12m3/h
- speed	: 65rpm
- power	: 1,5 KW
- electrical connections	: 400V, 50Hz, IP55
- body material	: CAST IRON
- cutters material	: Chromium molybdenum ETOS
- shafts material	: Alloy Steel Hardened
- port type & dimensions	: 6" NB BS4504 Flanges

3/12/18
GEORGIOS KARKANIAS
PRESIDENT

8.1.7b Two (2) progressing cavity (screw) sludge pumps for feeding holding tank, one standby, with overpressure protection and dry run protection

- manufacturer	: NOV PROCESS (MONO PUMPS)
- type	: C14KC11RMA
- flow	: 6m3/h
- pressure	: 6bar
- speed	: 226rpm
- power	: 3 KW
- electrical connections	: 400V, 50Hz, IP55
- body suction chamber	: CAST IRON-BS EN 1561-EN-GJL-HB195
- stator	: NBR
- rotor	: ALLOY STEEL - ASTM A322 - GRADE 4110
- shaft	: STAINLESS STEL - BS EN 10088-3 GRADE X2CrNi18-9, 1.4307

8.1.8 Two (2) frequency converters (inverters) for sludge pumps

- manufacturer	: SIEMENS
- type	: SINAMICS G 120C
- power	: 3KW

8.2 SLUDGE HOLDING TANK

8.2.1 One (1) submersible mixer with lifting device

- manufacturer of mixer	: WILO
- type	: TR 21.145-4/11 S14
- propeller diameter	: 210mm
- propeller speed	: 1390rpm
- rated power	: 1,3 KW
- power input (duty point)	: 1,2 KW
- maximum power input	: 1,74 KW
- electrical connections	: 400V, 50Hz
- manufacturer of lifting devise	: KARKANIAS SA

3/12/18

GEORGIOS KARKANIAS
PRESIDENT

8.3 SLUDGE MECHANICAL DEWATERING UNIT

8.3.1 Two (2) progressing cavity (screw) sludge pumps for decanter feeding, one standby, with overpressure protection

- manufacturer	: NOV PROCESS (MONO PUMPS)
- type	: C14KC11RMA
- flow	: 6m3/h
- pressure	: 3bar
- speed	: 219rpm
- power	: 2,2 KW
- electrical connections	: 400V, 50Hz, IP55
- body suction chamber	: CAST IRON-BS EN 1561-EN-GJL-HB195
- stator	: NBR
- rotor	: ALLOY STEEL - ASTM A322 - GRADE 4110
- shaft	: STAINLESS STEL - BS EN 10088-3 GRADE X2CrNi18-9, 1.4307

8.3.2 Two (2) frequency converters (inverters) for sludge pumps

- manufacturer	: SIEMENS
- type	: SINAMICS G 120C
- power	: 2,2KW

3/12/19

GEORGIOS KARKANIAS
PRESIDENT

8.3.3 One (1) electromagnetic inductive flow meter for stabilized/thickened sludge

- manufacturer : SIEMENS
- type : Sitrans F M MAG 5100 W (sensor)
  : Sitrans F M MAG 5000

Flow sensor

Flowmeter for water and wastewater treatment plants for compact or separate transmitter. NBR hard rubber lining, integrated grounding and measuring electrodes made of Hastelloy C, flange size according to EN 1092-1, ambient temperature -40 – +70 °C, temperature of medium -10 – +70 °C, flange and flowmeter housing made of painted steel, terminal box with cable gland M20, flash memory to save calibration, verification data of sensor, and save customer-specific settings, degree of protection IP 67, approvals PED-97/23EG, removable part as spare, supply and mount ready-to-operate.

Transmitter

Microprocessor-controlled transmitter in compact or offset design in glass fibre-reinforced polyamide housing with backlight, three-line, alphanumeric display for flow, counter for forward, reverse or net flow, indication of flow direction, comprehensive self-diagnostics for error signalling and recording. Keypad with display unit, leak flow volume suppression, measuring principle with constant field pulsing, automatic zero adjustment, flash memory for automatic recording of calibration and verification data of sensor data as well as customer specific settings, measuring error 0.4 %, simultaneous utilization of analog output 0/4 – 20 mA, pulse output, digital input and output, relay output 24 V DC/1 A, as well as electrical isolation of inputs and outputs. Ambient temperature -20 - +60 °C, power supply 24 V DC, degree of protection IP 67, supply and mount ready-to-operate.

3/12/18

GEORGIOS KARKANIAS
PRESIDENT

8.3.4 One (1) centrifuge (decanter) for sludge dewatering

- manufacturer : ALFA LAVAL
- type : ALDEC 45 VDF
- flow : 5m3/h
- solids load : 125kgSS/h
- dewatered sludge solids : 23%

Bowl

Diameter 360 mm

Length 1512 mm

Maximum main speed 4.200 rpm

G-force at operating speed 3.549 g

Material - bowl shell AISI 316

Material - hubs Duplex SS

Material – bolts AISI 316

Beach angle 20°

Wear protection

Solids transportation aids, cylindrical and taper section: Ribs in AISI 316

Solids discharge: Tungsten carbide

Frame and casing

Type frame-casing: Box beam profile with integral casing

Material – frame: Mild steel colour medium blue NCS 3560 R75B

Material casing: SS AISI 316

Wear protection: Wear liner in AISI 304 on discharge area/discharge clarified

Main motor

Type ABB, VFD 15 kW, 3x380V, 50 Hz, IP55 type

Back drive

Type ABB, VFD 5.5 kW , 3x380V, 50 Hz, IP55 type

Gear box

Type Planetary 2 stage

Ratio 1: 159

Max. torque 2,5 kNm

Max differential speed and torque 44 rpm at 2,5 kNm

Differenzial speed conveyor regulation by inverter

Control panel

3/12/18

GEORGIOS KARKANIAS
PRESIDENT

8.3.5 One (1) automatic preparation device for polyelectrolyte

- manufacturer	: KARKANIAS SA
- type	: TAP 3000K
- capacity	: max3000lt/h
- total capacity of three chambers	: 3*1000lt
- capacity of powder hopper	: 50 lt
- material	: AISI 304
- flocculant's concentration	: 0,05 – 0,5%

Powder dosing with variable speed by inverter

Three (3) propellers

- material	: AISI 304

1st propeller gear motor

- manufacturer	: BONFIGLIOLI
- type (motor / gear)	: BN 100LB / S401 F_1.9
- propeller speed	: 350rpm
- power	: 1,1KW

2nd propeller gear motor

- manufacturer	: BONFIGLIOLI
- type (motor / gear)	: P71 BN71B4 / VF44_7
- propeller speed	: 196rpm
- power	: 0,37KW

3rd propeller gear motor

- manufacturer	: BONFIGLIOLI
- type (motor / gear)	: P71 BN71B4 / VF44_14
- propeller speed	: 98rpm
- power	: 0,37KW
- electrical connections	: 400V, 50Hz

one pressure regulator, one electrovalve, one ball valve, one flowmeter, one manometer

Three level switches

Control panel

3/12/18

GEORGIOS KARKANIAS
PRESIDENT

8.3.6 Two (2) progressing cavity (screw) pumps for dosing polyelectrolyte, one standby, with overpressure protection

- manufacturer	: NOV PROCESS (MONO PUMPS)
- type	: C22AC51EMA
- flow	: 650lt/h
- pressure	: 3bar
- speed	: 421rpm
- power	: 0,75 KW
- electrical connections	: 400V, 50Hz, IP55
- body suction chamber	: CAST IRON-BS EN 1561-EN-GJL-HB195
- stator	: NBR
- rotor	: STAINLESS STEEL - BS EN 10088-3 GRADE X2CrNiMo17-12-2, 1.4404
- shaft	: STAINLESS STEL - BS EN 10088-3 GRADE X2CrNiMo17-12-2, 1.4404

8.3.7 Two (2) frequency converters (inverters) for polyelectrolyte dosing pumps

- manufacturer	: SIEMENS
- type	: SINAMICS G 120C
- power	: 0,75KW

8.3.8 One (1) electromagnetic inductive flow meter for polyelectrolyte solution

- manufacturer	: SIEMENS
- type	: Sitrans F M MAG 5100 W (sensor)
	: Sitrans F M MAG 5000

Flow sensor

Flowmeter for water and wastewater treatment plants for compact or separate transmitter. NBR hard rubber lining, integrated grounding and measuring electrodes made of Hastelloy C, flange size according to EN 1092-1, ambient temperature -40 – +70 °C, temperature of medium -10 – +70 °C, flange and flowmeter housing made of painted steel, terminal box with cable gland M20, flash memory to save calibration, verification data of sensor, and save customer-specific settings, degree of protection IP 67, approvals PED-97/23EG, removable part as spare, supply and mount ready-to-operate.

Transmitter

Microprocessor-controlled transmitter in compact or offset design in glass fibre-reinforced polyamide housing with backlight, three-line, alphanumeric display for flow, counter for forward, reverse or net flow, indication of flow direction, comprehensive self-diagnostics for error signalling and recording. Keypad with display unit, leak flow volume suppression,

3/12/18

GEORGIOS KARKANIAS
PRESIDENT

measuring principle with constant field pulsing, automatic zero adjustment, flash memory for automatic recording of calibration and verification data of sensor data as well as customer specific settings, measuring error 0.4 %, simultaneous utilization of analog output 0/4 – 20 mA, pulse output, digital input and output, relay output 24 V DC/1 A, as well as electrical isolation of inputs and outputs. Ambient temperature -20 - +60 °C, power supply 24 V DC, degree of protection IP 67, supply and mount ready-to-operate.

8.3.9 One (1) screw conveyor for dewatered sludge

- manufacturer	: KARKANIAS SA
- type	: SC
- power	: 1,5KW
- electrical connections	: 400V, 50Hz
- trough material	: AISI304
- screw material	: S355

8.3.10 Two (2) containers for dewatered sludge

- manufacturer	: VAN
- type	: NM-5V
- capacity	: 5m3
- dimensions (W x L x H)	: 1700 x 3000 x 1250mm

8.3.11 One (1) sludge container chassis with electric drive

- manufacturer	: KARKANIAS SA
- loading capacity	: 9tn

8.3.12 One (1) fan for ventilation of sludge dewatering building

- manufacturer	: Soler & Palau (S&P)
- type	: HCFT/4-400/H
- flow	: 5070 m3/hr
- speed	: 1350 rpm
- power	: 300W
- electrical connections	: 400V, 50Hz

8.3.13 One (1) lifting device (overhead crane) for dewatering equipment

- manufacturer	: KARKANIAS SA
- lifting capacity	: 1600kg

3/12/18

GEORGIOS KARKANIAS
PRESIDENT

9. SERVICE WATER UNIT

9.1 One (1) automatic pressure station with two (one standby) centrifugal pumps for service water

- manufacturer	: EBARA
- type	: EVMSG15 6N5
- flow	: 21m3/h
- pressure	: 6bar
- speed	: 2900rpm
- power	: 5,5KW
- electrical connections	: 400V, 50Hz
- material (body/impellers/shaft)	: AISI304/AISI304/AISI316

Frequency converters (inverters), two items

- manufacturer	: DAB
- type	: MCE/P55
- power	: 5,5KW

Pressure vessels, two items

- capacity	: 18lt

Analog pressure transmitter

Control panel

3/12/18

GEORGIOS KARKANIAS
PRESIDENT

10. TRANSFORMER STATION, POWER SWITCHBOARDS, BACKUP POWER SUPPLY

10.1 Medium Voltage Switchboard

- Enclosure manufacturer & montage	: GERO S.A.
- Incoming unit	: ABB, DRC_500
	With measurement and busbar earthing
- Switch disconnector	: ABB, SFC_500

10.2 Transformer

- Manufacturer	: ABB
- Rated power	: 500 kVA
- Primary voltage	: 10 kV
- Secondary voltage	: 400 V
- Frequency	: 50 Hz
- Oil weight	: 340 Kg
- Cooling	: ONAN

Standard accessories

Bucholz Relay CH/O

Off circuit tap changer on primary winding

Wheels

Dehydrating breather

Thermometer with 2 contactors

Magnetic Oil level indicator (w/o) contactors

Terminals for LV bushing/Flags

10.3 Low Voltage Main Distribution Switchboard

- Manufacturer	: GERO S.A.
-Switchgear manufacturer	: ABB

10.4 Two (2) Power Distribution Switchboards (PDC)

- Manufacturer	: GERO S.A.
- Switchgear manufacturer	: ABB
- Installation of PDC 1	: Blowers building
- Installation of PDC 2	: Sludge dewatering building

3/12/18

GEORGIOS KARKANIAS
PRESIDENT

10.5 Backup Power Supply Unit

- Manufacturer : KAPELOS DIESELS S.A.
- Type : 210 kVA Standby Power on Trailer

Engine

- Manufacturer : John Deere
- Number of cylinders : 6
- Displacement : 6800 cm^3
- Stand By output, according to ISO3046 : 245 HP (183KW) at 1500 RPM

Alternator

- Manufacturer : Marelli
- Continuous output : 185 KVA, 400V, 50Hz
- Standby output : 205 KVA, 400V, 50Hz

Fuel tank: 220 l built-in the chassis, 2000l in stationary container

Automatic Control Panel for Standby use

- Control panel is made from metal sheet, epoxy painted with front door for easy inspection and repair.
- Automatic Mains Failure Controller
- The D500L is next generation genset control units combining multi-functionality and wide communication possibilities together with a reliable and low cost design.
- The unit complies and mostly exceeds world's tightest safety, EMC, vibration and environmental standards for the industrial category.
- Software features are complete with easy firmware upgrade process through USB port.
- The Windows based PC software allows monitoring and programming through USB, serial and GPRS.
- The PC based Rainbow Scada software allows monitoring and control of an unlimited number of gensets from a single central location.

Canopy

The canopy is designed and built to provide a perfect cooling for the engine, even for tropical ambient application. Noise level 67 dBA ±3 at 7 m.

Trailer

The complete gen set is equipped with trailer, including mechanical disk brake with auto-reverse. Directional stability and low maintenance coil spring.

31/2/18

GEORGIOS KARKANIAS
PRESIDENT

11. AUTOMATION SYSTEM & SCADA

11.1 PLC 01 in Blower house

- Manufacturer : Siemens
- Type : Simatic S7-1500
- CPU : 1515-2PN
- Working memory for program : 500 kB
- Working memory for data : 3 MB
- Total number of Digital Inputs : 160
- Total number of Digital Outputs : 64 (24 VDC/0,5A)
- Total number of Analog Inputs : 24
- Total number of Analog Outputs : 12

11.2 Touch Panel 01 in Blower house

- Manufacturer : Siemens
- Type : Simatic TP1200 Comfort
- Screen size : 12" – 16 mil Colors
- Memory : 12 MB

11.3 PLC 02 in Sludge dewatering building

- Manufacturer : Siemens
- Type : Simatic S7-1500
- CPU : 1515-2PN
- Working memory for program : 500 kB
- Working memory for data : 3 MB
- Total number of Digital Inputs : 224
- Total number of Digital Outputs : 96 (24 VDC/0,5A)
- Total number of Analog Inputs : 24
- Total number of Analog Outputs : 16

3/12/18

GEORGIOS KARKANIAS
PRESIDENT

11.4 Touch Panel 02 in Sludge dewatering building

- Manufacturer	: Siemens
- Type	: Simatic TP1200 Comfort
- Screen size	: 12" – 16 mil Colors
- Memory	: 12 MB

11.5 SCADA

- Manufacturer : Siemens

For each (of two redundant) server

WINCC SYSTEMSOFTWARE V7.4, RT 2048 (2048 POWER TAGS),
WINCC/SERVER V7.4, OPTION F. WINCC V7.4, RUNTIME-SW

For both servers

WINCC/REDUNDANCY V7.4, OPTION F. WINCC V7.4, RUNTIME-SW

For each (of two) client

WINCC SYSTEMSOFTWARE V7.4, RT 128 (128 POWER TAGS), RUNTIME-SW

11.6 Servers, 2 pcs

- Manufacturer	: HP
- Model	: Workstation Z240 SFF
- Processor	: Intel Core i7 6700 3,4,GHz (Quad Core)
- RAM	: 8 GB DDR4 SDRAM
- Cache Memory	: 8 MB
- Hard drive	: 1 TB – SATA 6 Gb/s
- Graphics controller	: Intel HD Graphics 530
- Monitors	: LG Monitor 25UM58-P (25")

3/12/18

GEORGIOS KARKANIAS
PRESIDENT

11.7 Clients, 2 pcs

- Manufacturer	: HP
- Model	: Workstation Z240 MT
- Processor	: Intel Core i5 6600 3,3,GHz (Quad Core)
- RAM	: 8 GB DDR4 SDRAM
- Cache Memory	: 6 MB
- Hard drive	: 1 TB – SATA 6 Gb/s
- Graphics controller	: Intel HD Graphics 530
- Monitors	: LG Monitor 25UM58-P (25")

11.8 Printer A4

- Manufacturer	: Samsung
- Model	: MFP Laser Color SL-C480 N

11.9 Printer A3+

- Manufacturer	: Epson
- Model	: L1300

11.10 UPS

- Manufacturer	: Delta Electronics
- Model	: Amblon

3/12/18

GEORGIOS KARKANIAS
PRESIDENT

12. LABORATORY EQUIPMENT

12.1 One (1) spectrophotometer for measurement of COD, NH4-N, NO3-N, TN, TP

- manufacturer : HACH
- model : DR 3900

12.2 One (1) dry thermostat

- manufacturer : HACH
- model : LT 200

12.3 One (1) BOD respirometric apparatus

- manufacturer : VELP SCIENTIFICA
- model : BOD sensor system 6

12.4 One (1) cooled incubator

- manufacturer : VELP SCIENTIFICA
- model : FTC 120

12.5 One (1) suspended solids measurement equipment

12.5.1 Drying oven

- manufacturer : AUXILAB/ NAHITA BLUE
- model : Series 631 Plus / JBD001
- characteristics : 30L

12.5.2 Analytical balance

- manufacturer : AUXILAB/ NAHITA BLUE
- model : 5134 EX / KBF003
- characteristics : 220g/0.1mg

12.5.3 Filtration system consisting of:

Filtering flask

- manufacturer : AUXILAB/ NAHITA BLUE
- model : PJH003 (12418311)
- characteristics : 1000 mL

3/12/18
GEORGIOS KARKANIAS
PRESIDENT

Set of 7 adapters f/filtres

- manufacturer : AUXILAB/ NAHITA BLUE
- model : PNJ002 (45000420)
- characteristics : Neoprene

Water jet pump f/vacuum

- manufacturer : AUXILAB/ NAHITA BLUE
- model : PXL004 (45001395)

Büchner funnel

- manufacturer : AUXILAB/ NAHITA BLUE
- model : PNF002 (20237050)
- characteristics : Øint 50mm

Gooch crucible

- manufacturer : AUXILAB/ NAHITA BLUE
- model : PLB001 (20232320)

Filter glass fiber

- manufacturer : AUXILAB/ NAHITA BLUE
- model : PSP028 (84011047)
- characteristics : 47 mm, b/100

12.5.4 Stopcock lid desiccator

- manufacturer : AUXILAB/ NAHITA BLUE
- model : BDB005 (10264300)
- characteristics : 300mm

12.6 Two (2) imhoff cones

12.7 Nine (3+3+3) measuring cylinders

- capacity : 100/250/500ml

12.8 Nine (3+3+3) graduated pippets

- capacity : 1/5/10ml

12.9 One (1) refrigerator

- capacity : 250lt

3/12/18
GEORGIOS KARKANIAS
PRESIDENT

3/12/18

Tehnička ponuda

Analitička lista sa opisom elektro-mehaničke opreme

KARKANIAS ENVIRONMENTAL TECHNOLOGY S.A.
INDUSTRIAL AREA OF LARISA - GREECE
POSTAL CODE 41004, BOX 3053
TEL.: +30 2410 541366 - FAX: +30 2410 541354
Email: info@karkanias.gr
TAX NUMBER: 095244711
REGISTRATION NUMBER: 48779/31/B/01/12

3/12/18

GEORGIOS KARKANIAS
PRESIDENT

CONTENTS

1. ULIVNA I PRELIVNA ŠAHTA 1
1.1 Četiri (4) cijevi za regulisanje protoka, za izolaciju komora 1
1.2 Dva (2) šljunkolova 1
1.3 Jedan (1) uređaj za dizanje za šljunkolove 1
1.4 Jedna (1) motorizovana cijev za regulisanje prilivne količine otpadnih voda 1
1.5 Jedna (1) membrana za otpadnu pjenu 1
1.6 Jedna (1) prelivna pregrada 1
1.7 Jedan (1) ultrazvučni mjerač protoka sa Parshall-ovim vodomjerom 2
1.8 Jedna (1) automatska stanica za prijem neprečišćenih uzoraka otpadnih voda 2
1.9 Dva (2) spremnika za šljunak 3
1.10 Jedna (1) postolje za spremnik za šljunak sa električnim pogonom 3

2. JEDINICA ZA KANALIZACIONI OTPAD 4
2.1 Jedan (1) elektromotorni nožasti propusni ventil na ulaznom cjevovodu 4
2.2 Jedan (1) šljunkolov 4
2.3 Jedan (1) elektromagnetno-induktivni mjerač protoka na ulaznom cjevovodu 4
2.4 Jedan (1) pH i temperaturni mjerač na ulaznom cjevovodu 5
2.5 Jedan (1) mjerač provodljivosti na ulaznom cjevovodu 6
2.6 Jedno (1) fino sito sa automatskim čišćenjem, doboš sa pužem za krupni otpad 7
2.7 Jedna (1) potapajuća mješalica sa uređajem za dizanje u rezervoaru za sakupljanje kanalizacionog otpada (septage collection tank) 8
2.8 Dvije (2) potapajuće pumpe u rezervoaru za sakupljanje kanalizacionog otpada), jedna rezervna 8
2.9 Jedan (1) uređaj za dizanje (dizalica) za pumpe 8
2.10 Jedan (1) ultrazvučni mjerač nivoa 8
2.11 Jedan (1) ventil za pražnjenje rezervoara pomoću gravitacije 9
2.12 Jedan (1) spremnik za krupni otpad i šljunak 9
2.13 Jedna (1) automatska stanica za prijem kanalizacionog otpada 9
2.14 Jedna (1) automatska stanica za prijem uzoraka kanalizacionog otpada (septage) 9

3. PUMPNA STANICA 11
3.1 Četiri (4) cijevi za regulisanje protoka za izolaciju sita 11
3.2 Jedno (1) grubo sito sa automatskim čišćenjem (sa višestrukim šipkama) 11
3.3 Jedno (1) grubo sito sa manualnim čišćenjem, rezervno 11
3.4 Jedan (1) pužasti transporter za krupni otpad 11
3.5 Jedan (1) ultrazvučni diferencijalni mjerač nivoa 12
3.6 Jedan (1) spremnik za krupni otpad 12
3.7 Jedno (1) postolje spremnika za otpad sa električnim pogonom 12
3.8 Tri (3) potapajuće pumpe u pumpnoj stanici, jedna rezervna 12
3.9 Tri (3) konvertera (invertera) frekvencije za pumpe 13
3.10 Jedan (1) elektromagnetno-induktivni mjerač protoka na pumpnoj ispusnoj cijevi 13
3.11 Jedan (1) uktrazvučni mjerač nivoa 13
3.12 Jedan (1) uređaj za dizanje (jednošinski) za pumpnu stanicu 14
3.13 Jedna (1) membrana za plutajuće materije 14
3.14 Jedna (1) cijev za regulisanje protoka 14

4. UREĐAJ ZA MEHANIČKO PREDPREČIŠĆAVANJE OTPADNIH VODA 15
4.1 Dva (2) ventila na obilaznom cjevovodu i ulaznom cjevovodu 15
4.2 Jedan (1) kompaktni uređaj za mehaničko predprečišćavanje 15

3/12/18
GEORGIOS KARKANIAS
P.P. PRESIDENT

4.3 Četiri (2+2) spremnika za krupni otpad i pijesak 17
4.4 Jedno (1) postolje spremnika za krupni otpad sa električnim pogonom 17
4.5 Jedno (1) postolje spremnika za pijesak sa električnim pogonom 17

5. PROCES BIOLOŠKOG PREČIŠĆAVANJA 18

5.1 KOMORA I ZA DISTRIBUCIJU PROTOKA 18
5.1.1 Jedna (1) prelivna pregrada za distribuciju protoka 18
5.1.2 Jedan (1) ventil na cjevovodu 18
5.1.3 Jedan (1) prelivni teleskopski ventil za premošćavanje 18

5.2 BAZEN ZA PRE-DENITRIFIKACIJU 18
5.2.1 Jedna (1) potapajuća mješalica sa uređajem za dizanje u retervoaru za pre- denitrifikaciju : WILO 18

5.3 CIRKULACIONI SPREMNIK ZA AKTIVNI MULJ 18
5.3.1 Dvije (2) potapajuće mješalice sa uređajima za dizanje, jedna po koridoru 18
5.3.2 Dva (2) uređaja za produvavanje sa rotirajućim krilima za aeraciju, jedan rezervni, sa poklopcima za zaštitu od buke 19
5.3.3 Dva (2) konvertera (invertera) frekvencije za uređaje za produvavanje 19
5.3.4 Jedan (1) uređaj za dizanje (jednošinski) za uređaje za produvavanje 19
5.3.5 Jedan (1) ventilator za ventilaciju objekta sa uređajima za produvavanje 19
5.3.6 Jedan (1) glavni zračni cjevovod 20
5.3.7 Dvije (2) cijevi za distribuciju vazduha sa leptirastim ventilima za regulaciju ili izolaciju protoka 20
5.3.8 Dvije (2) vazdušne rešetke za difuzore 20
5.3.9 Stodevedesetdva (192) difuzora sa finim bubble membranama (disk tipa), devedeset šest po rešetki 20
5.3.10 Jedna (1) prelivna pregrada 20
5.3.11 Jedan (1) mjerač rastvorenog kiseonika 20
5.3.12 Jedan (1) MLSS mjerač 22
5.3.13 Jedna (1) mješalica (vertikalna osovina) u izlaznoj šahti rezervoara 23

5.4 KOMORA II ZA DISTRIBUCIJU PROTOKA 23
5.4.1 Jedna (1) prelivna pregrada za distribuciju protoka 23
5.4.2 Jedan (1) ventil na cjevovodu 23
5.4.3 Jedan (1) prelivni teleskopski ventil za premošćavanje 23

5.5 BAZEN ZA FINALNO TALOŽENJE 24
5.5.1 Jedan (1) rotirani radijalni most sa skrejperima (scrapers) dna i površine 24
5.5.2 Jedan (1) skimer (skimmer) za pjenu 24
5.5.3 Jedan (1) bazen za ulaznu vodu (influent) 24
5.5.4 Jedna (1) periferna prelivna pregrada (V- žlijeb) 24
5.5.5 Jedna (1) periferna membrana za pjenu 24

5.6 PUMPNA STANICA ZA POVRATNI AKTIVNI MULJ I VIŠAK MULJA 25
5.6.1 Dvije (2) potapajuće pumpe za povratni mulj, jedna rezervna 25
5.6.2 Dva (2) konvertera (invertera) frekvencije za pumpe povratnog mulja 25
5.6.3 Jedan (1) elektromagetno-induktivni mjerač protoka za povratni mulj 25
5.6.4 Jedan (1) ultrazvučni mjerač nivoa 26
5.6.5 Dva (2) uređaja za dizanje za pumpe, jedan za pumpu za višak mulja i jedan za pumpu za povratni mulj 26
5.6.6 Dvije (2) potapajuće pumpe za višak mulja, jedna rezervna 26
5.6.7 Dva (2) konvertera (invertera) frekvencije za pumpe za višak mulja 27

3/12/18

GEORGIOS KARKANIAS
PRESIDENT

5.6.8 Jedan (1) elektromagnetno-induktivni mjerač protoka za višak mulja 27
5.6.9 Jedan (1) ventil na cjevovodu za mulj 27

5.7 HEMIJSKA FOSFORNA PRECIPITACIJA 28
5.7.1 Tri (3) dozirne pumpe (sa membranom) za hemijski rastvor za fosfornu precipitaciju, jedna rezervna, sa cijevima i ventilima 28
5.7.2 Jedan (1) elektromagnetno-induktivni mjerač protoka za hemijski rastvor za fosfornu precipitaciju 28
5.7.3 Jedan (1) rezervoar sa dvostrukim zidom za hemijski rastvor za fosfornu precipitacije, sa tri prekidača nivoa 29
5.7.4 Dvije (2) pumpe (na magnetni pogon, plastične, centrifugalne) za hemijski rastvor, jedna rezervna 29

6. JEDINICA ZA FILTRACIJU 30
6.1 Jedna (1) prelivna cijev ra regulisanje protoka, za distribuciju i izolaciju protoka u spremniku sa prečišćivačem 30
6.2 Jedna (1) cijev za regulisanje protoka, za premošćavanje 30
6.3 Jedan (1) filter rotirajućeg doboša na mikro situ sa automatskim čišćenjem za tercijarno prečišćavanje otpadnih voda 30

7. UV DEZINFEKCIONA JEDINICA – IZLAZNA VODA (EFLUENT) 32
7.1 Dvije (2) prelivne cijevi za regulisanje protoka, za izolaciju UV kanala 32
7.2 Jedan (1) UV dezinfekcioni sistem sa automatskim čišćenjem 32
7.3 Jedan (1) ultrazvučni mjerač protoka sa Parshall-ovim vodomjerom 34
7.4 Jedna (1) automatska stanica za prijem uzoraka prečišćenih otpadnih voda 34
7.5 Jedna (1) potapajuća pumpa za servisni rezervoar za vodu 35
7.6 Tri (3) prekidača nivoa za rad potapajućih pumpi 35
7.7 Jedan (1) uređaj za dizanje za potapajuću pumpu 35
7.8 Jedna (1) prelivna pregrada na UV izlaznom šahtu 35

8. JEDINICE ZA PREČIŠĆAVANJE MULJA 36

8.1 REZERVOAR ZA AEROBNU STABILIZACIJU I ZGUŠNJAVANJE MULJA 36
8.1.1 Jedna (1) potapajuća mješalica sa uređajem za dizanje 36
8.1.2 Jedan (1) potapajući jet aerator, sa jednom extra pumpom 36
8.1.3 Jedan (1) ultrazvučni mjerač nivoa 36
8.1.4 Tri (3) prekidača nivoa 37
8.1.5 Jedan (1) uređaj za dizanje za jet aerator 37
8.1.6 Dvije (2) drenažne prelivne cijevi sa propusnim ventilima 37
8.1.7a Dva (2) maceratora (pumpe drobilice) 37
8.1.7b Dvije (2) progresivno kavitacione (pužne) pumpe za mulj, za napajanje rezervoara za mulj, jedna rezervna, sa zaštitom od nadpritiska i zaštitom od rada na prazno 37
8.1.8 Dva (2) konvertera (invertera) frekvencije za pumpe za mulj 38

8.2 REZERVOAR ZA MULJ 38
8.2.1 Jedna (1) potapajuća mješalica sa uređajem za dizanje 38

8.3 JEDINICA ZA MEHANIČKU DEHIDRACIJU MULJA 39
8.3.1 Dvije (2) progresivno kavitacione (pužne) pumpe za mulj, za napajanje dekantera, jedna rezervna, sa zaštitom od nadpritiska 39
8.3.2 Dva (2) konvertera (invertera) frekvencije za pumpe za mulj 39
8.3.3 Jedan (1) elektromagnetno-induktivni mjerač protoka za stabilizirani/zgusnuti mulj 39
8.3.4 Jedna (1) centrifuga (decanter) za dehidraciju mulja 40
8.3.5 Jedan (1) automatski uređaj za pripremu polielektrolita 41

31/2/18
GEORGIOS KARKANIAS
PRESIDENT

8.3.6 Dvije (2) progresivne (kavitacione) pumpe za doziranje polielektrolita, jedna rezervna, sa zaštitom od nadpritiska 42
8.3.7 Dva (2) konvertera (invertera) frekvencije za pumpe za doziranje polielektrolita 42
8.3.8 Jedan (1) elektromagnetno-induktivni mjerač protoka za rastvor polielektrolita 43
8.3.9 Jedan (1) pužasti transporter za dehidrirani mulj 43
8.3.10 Dva (2) spemnika za dehidrirani mulj 43
8.3.11 Jedno (1) postolje spremnika za mulj sa električnim pogonom 44
8.3.12 Jedan (1) ventilator za objekat za dehidraciju mulja 44
8.3.13 Jedan (1) uređaj za dizanje (mosna dizalica) za opremu za dehidraciju 44

9. JEDINICA ZA SERVISNU VODU 45
9.1 Jedna (1) stanica za automatski pritisak sa dvije (jedna rezervna) centrifugalne pumpe za servisnu vodu 45

10. TRAFOSTANICA, RAZVODNE TABLE, REZERVNO ELEKTRIČNO NAPAJANJE 46
10.1 Razvodna tabla srednjeg napona 46
10.2 Transformator 46
10.3 Niskonaponska glavna distributivna razvodna tabla 46
10.4 Dvije (2) distributivne table (PDC) 46
10.5 Jedinica za rezervno električno napajanje 47

11. SISTEM AUTOMATIZACIJE & SCADA 48
11.1 PLC 01 u objektu sa uređajima za produvavanje 48
11.2 Touch ploča 01 u objektu sa uređajima za produvavanje 48
11.3 PLC 02 u objektu za dehidraciju mulja 48
11.4 Touch ploča 02 u objektu za dehidraciju mulja 49
11.5 SCADA 49
11.6 Serveri, 2 komada 49
11.7 Korisničke stanice, 2 komada 50
11.8 Štampač A4 50
11.9 Štampač A3+ 50
11.10 UPS 50

12. LABORATORIJSKA OPREMA 51
12.1 Jedan (1) spektrometar za mjerenje COD, NH4-N, NO3-N, TN, TP 51
12.2 Jedan (1) suvi (dry) termostat 51
12.3 Jedan (1) BOD respirometrički aparat 51
12.4 Jedan (1) rashladni inkubator 51
12.5 Jedna (1) mjerna oprema za suspendovane čvrste materije 51
12.6 Dva (2) Imhoff-ova konusa 52
12.7 Devet (3+3+3) mjernih cilindara 52
12.8 Devet (3+3+3) graduiranih pipeta 52
12.9 Jedan (1) frižider 52

3/12/18
GEORGIOS KARKANIAS
PRESIDENT

1. ULIVNA I PRELIVNA ŠAHTA

1.1 Četiri (4) cijevi za regulisanje protoka, za izolaciju komora

- proizvođač : KARKANIAS SA
- dimenzije (Š x V) : 800 x 600 mm
- materijal : AISI 304

1.2 Dva (2) šljunkolova

- proizvođač : KARKANIAS SA
- dimenzije (Š x D x V) : 1000 x 1000 x 400mm
- razmak šipki : 80mm
- materijal : AISI 304

1.3 Jedan (1) uređaj za dizanje za šljunkolove

- proizvođač : KARKANIAS SA
- materijal : st37
- kapacitet dizanja : 1500kg

1.4 Jedna (1) motorizovana cijev za regulisanje prilivne količine otpadnih voda

- proizvođač : KARKANIAS SA
- dimenzije (Š x V) : 800 x 800 mm
- materijal : AISI 304

Motor reduktor

- snaga : 0,37KW
- električni priključak : 400V, 50Hz

1.5 Jedna (1) membrana za otpadnu pjenu

- proizvođač : KARKANIAS SA
- materijal : AISI 304

1.6 Jedna (1) prelivna pregrada

- proizvođač : KARKANIAS SA
- materijal : AISI 304

3/12/18
GEORGIOS KARKANIAS
PRESIDENT

1.7 Jedan (1) ultrazvučni mjerač protoka sa Parshall-ovim vodomjerom

- proizvođač : SIEMENS
- tip : Sitrans LUT 430 (transduktor)
  Echomax XRS 5 (senzor)

Ultrazvučni transduktor sa ultrazvučnim senzorom za bezkontaktno mjerenje nivoa ispune, udaljenosti, zapremine, brzine protoka, tendencija ili količina u otvorenim ustavama, kanalima ili branama sa algoritmima za uštedu energije i vremena - izračunavanje prelivanja, predprogramirane aritmetičke operacije za linearizaciju Parshall-ovih ustava, pravougaonih ustava, vodoslivova ili V brana i polučaura, utvrđivanje zapremine kao i regulisanje kišnice, ventilacionih pumpi i bazena za ispiranje, programiranje univerzalne trase sa 20 potpornih tačaka, programiranje pomoću lokalnih tastera ili EDD- ili DTM-baziranog softvera, dinamička adaptacija omotača za eho analizu, automatsko prigušenje interferirajućeg eha, HART komunikacije, registrovanje podataka, izvor napajanja 100 - 230 V AC, izlazna snaga 4 mA – 20 mA, opterećenje 600 ohm, 3 releja nominalne snage 5 A pri 250 V AC, 2 otvorena kontakta, 1 changeover kontakt/prekidač (za prebacivanje), tačnost 0.17 %, stepen zaštite omotača IP 65, ambijetalna temperatura -20 – +50 °C, LCD display 60 mm x 40 mm sa pozadinskim osvjetljenjem, sa mogućnošću parametarskog backup-a.

Ultrazvučni senzor sa priključnim kablom 10 m, mjernim opsegom 0.3 – 8 m, ugao snopa 10°, mjerna frekvencija 44 kHz, stepen zaštite IP65/IP68, odobrenje u skladu sa CE, FM, CSA(US/C), UL, C-TICK, integrisana temperaturna kompenzacija, ambijentalna temperatura -20 – +50°C, uključujući uputstva za rad, materijal za montiranje, isporuku i montažu spremno-za-rad.

1.8 Jedna (1) automatska stanica za prijem neprečišćenih uzoraka otpadnih voda

- proizvođač : HACH
- tip : AS950

Uređaj za uzorkovanje

Materijal kućišta: ABS plastika otporna na udar, postolje trodjelne kontrukcije sa dvostrukim zidom, izolacija 2.54 cm, direktan kontakt leda sa bocama (uzimač uzoraka)

Temperatura: Radna: 0 - 49 °C
Skladišna: -40 - 60 °C

Uslovi napajanja (napon): 12 V DC

Dimenzije (Š x V x Dub.) Standardna osnova: 50.5 cm x 69.4 cm

Težina Standardna: 15 kg sa (24) 1 L polietilenske boce

Regulator

Materijal kućišta: smjesa PC/ABS blend, NEMA 4X, 6, IP68, otporan na koroziju i led (regulator)

Display: 1/4 VGA, u boji; self-prompting/menu-driven program

Korisnički interface: Keypad (sklop tastera) sa membranskim prekidačem sa 2 meka tastera višestruke funkcije

3/12/18

GEORGIOS KARKANIAS
PRESIDENT

Jezici korisničkog interface-a: engleski, francuski, španskim italijanski, njemački, portugalski, kineski

Blokirajuća funkcija: Zaštita pristupne šifre sprječava neovlašćeno preuzimanje

Memorija: Istorija uzorka: 4000 zapisa;
Bilježenje podataka (data log): 325,000 zapisa;
Bilježenje događaja (event log): 2000 zapisa

Mogućnosti komunikacije: USB I opciono RS485 (MODBUS)

Ulazi: Jedan 0/4-20 mA ulaz za tempiranje protoka

Certifikati: CE, UL2

Spremnici za uzorke

(24) 1 L polietilenske boce

1.9 Dva (2) spremnika za šljunak

- proizvođač	: VAN
- tip	: NM-5V
- kapacitet	: 5m3
- dimenzije (Š x D x V)	: 1700 x 3000 x 1250mm

1.10 Jedna (1) postolje za spremnik za šljunak sa električnim pogonom

- proizvođač	: KARKANIAS SA
- utovarni kapacitet	: 9tona

3/12/18

GEORGIOS KARKANIAS
PRESIDENT

2. JEDINICA ZA KANALIZACIONI OTPAD

2.1 Jedan (1) elektromotorni nožasti propusni ventil na ulaznom cjevovodu

- proizvođač : VAG
- tip : nožasti propusni

2.2 Jedan (1) šljunkolov

- proizvođač : KARKANIAS SA
- dimenzije (D x V) : 600 x 600
- materijal : AISI 304

2.3 Jedan (1) elektromagnetno-induktivni mjerač protoka na ulaznom cjevovodu

- proizvođač : SIEMENS
- tip : Sitrans F M MAG 5100 W (senzor)
  : Sitrans F M MAG 5000

Senzor protoka

Mjerač protoka za postrojenja za prečiščavanje vode i otpadnih voda za kompaktni ili separatni transmiter. Čvrsta NBR gumena obloga, integrisane elektrode za uzemljenje i mjerenje napravljene od Hastelloy C, veličina prirubnica u skladu sa EN 1092-1,ambijentalna temperatura -40 – +70 °C, temperatura sredine -10 – +70 °C, kućište prirubnice i mjerača protoka napravljeno je od bojenog čelika, priključna kutija sa uvodnicom M20, flash memorija za očuvanje kalibracije, verifikacija podataka senzora, i očuvanje posebnig podešavanja klijenta, stepen zaštite IP 67, odobrenja PED-97/23EG, zamjenljivi dio kao rezervni,isporuka i montaža spremno-za-rad.

Transmiter

Transmiter sa mikroprocesorskom regulacijom u kompaktnoj ili offset izvedbi u poliamidskom kućištu sa armaturom od staklenih vlakana, display sa pozadinskim osvjetljenjem, trolinijski, alfanumerički, za protok, brojač za prednji, povratni ili neto protok, indikacija smjera protoka, sveobuhvatna samo-dijagnostika za signaliziranje i registrovanje greške. Sklop tastera sa display jedinicom, smanjenje obima curenja, mjerni princip sa konstantnim pulsiranjem polja, automatsko nulto podešavanje, flash memorija za automatsku registraciju podataka o kalibraciji i verifikaciju senzorskih podataka kao i posebna podešavanja klijenta, mjerna greška 0.4 %, istovremeno korišćenje analognog izlaza 0/4 – 20 mA, pulsnog izlaza, digitalnog ulaza i izlaza, relejnog izlaza 24 V DC/1 A, kao i električne izolacije ulaza i izlaza. Ambijentalna temperatura -20 - +60 °C, električno napajanje 24 V DC, stepen zaštite IP 67, isporuka i montaža spremno-za-rad.

3/12/18

GEORGIOS KARKANIAS
PRESIDENT

2.4 Jedan (1) pH i temperaturni mjerač na ulaznom cjevovodu

- proizvođač : B&C Electronics

Regulator PH6587

- Ulazi: pH elektrode (staklo ili antimon) / ORP elektrode / Pt100 / Pt1000
- Nulti: ±2pH, ±100mV, ±5°C, ±9°F
- Osjetljivost: 80 ÷ 110 % (70 ÷ 140 % antimon)
- Rezolucija: 0.01 pH, 1 mV, 0.1 °C/°F
- Tačnost: 0.2 % / Ponovljivost: 0.1 % / Nelinearnost: 0.1 %
- Softver za dualne filtere: 0.4 ÷ 50.0 sekundi za male I velike varijacije
- Dualni analogni izlaz: 0-20 mA / 4-20 mA Rmax 600 Ω
- Dualne zadane vrijednosti (set points) HI/LO: ON/OFF – releji PFM - PWM, SPST
- Histereza: 0 ÷ 1.40 pH, 0 ÷ 200 mV
- Kašnjenje: 0 ÷ 100.0 sekundi
- Alarm: SPDT relej sa kašnjenjem 0 ÷ 100.0 sekundi
- Funkcija čišćenja:
  - off / auto-čišćenje / ručno, relej SPDT repeticiono vrijeme 0.1 ÷ 100.0 sati
  - vrijeme čišćenja 1.0 ÷ 60.0 sekundi
  - vrijeme zadržavanja 0.0 ÷20.0 minuta
  - SPST i SPDT relejni kontakti: 220 V - 5 A rezistivno opterećenje
- Radna temperatura: -10 ÷ 60 °C
- Vlažnost: 95% bez kondenzacije
- Električno napajanje: 85 ÷ 264 Vac - 50/60 Hz
- 9 ÷ 36 Vdc, 12 ÷ 24 Vac (opcija 091.42x)
- Terminalni blokovi: prenosivi
- Težina: 1360 g
- Omotač: ABS, IP 65 zaštita
- Dimenzije: 256x230x89 mm
- EMC/RFI usklađenost: EN 61326

pH elektrode SZ 1150

- PTFE dvostruka veza, polimerski gel, ugrađeno Pt100.
- Opseg: 0/12 pH
- Temperatura: 0/100 °C
- Pritisak: 10 bar
- Tijelo: PVDF, vojni 4-pin konektor, 3/4" NPT navoj
- Dužina: 140 mm (45 mm kod potapanja)

3/12/18

GEORGIOS KARKANIAS
PRESIDENT

2.5 Jedan (1) mjerač provodljivosti na ulaznom cjevovodu

- proizvođač : B&C Electronics

Regulator C7685

Odabirljiv input od:
a. 2 elektrode, ćelije
b. transmiter 080310 i 4 ćelije sa elektrodama
c. transmiter 080310 i induktivne ćelije

Mjerni opseg: 0.2mS÷40S sa mogućnošću konverzije u %, g/l, Beaume

Ćelijska konstanta: 0.1 / 0.2 / 0.5 / 1 / 2 / 5 / 10

Ulaz za mjerenje temperature: Senzor RTD Pt100

Temperaturna kompenzacija: Automatska i ručna

Digitalni LCD display

Rad: Automatski i ručni

Display kalibracionih parametara

Display dualne zadane vrijednosti i alarmnih uslova

Analogni izlaz 0-4/20mA

Dualna zadana vrijednost sa histerezom, kašnjenjem i min/max programabilnim funkcijama

Softver za dualne filtere 0,4/50 sec

Softver: 3 pristupna nivoa, lak za upotrebu, blokada tastature, watch-dog (uređaj za upozorenje)

Automatska zaštita od preopterećenja i resetovanje

Pohranjivanje EEPROM parametara

Električno napajanje: 220V / 50Hz.

Vodonepropusni omotač BC9616.2 sa providnim prednjim vratima

Zaštita: IP 65 (NEMA 4X)

Veličina: 200x200x187 mm

Dimenzije: 200x200x187 mm

Sonda SZ 3300.1

Grafitna elektroda, Aplikacije: od 200 µS do 200 mS.

Ćelijska konstanta: K = 1 cm-1

Termokompenzator: Pt100

Materijal u dodiru sa tečnostima: PES-grafit L=55 mm

Temperatura: 100 °C max. na 10 bari, pritisak: 16 bari na 25 °C

Konektor: 4-pin, navoj: 3/4" NPT

3/12/18

GEORGIOS KARKANIAS
PRESIDENT

2.6 Jedno (1) fino sito sa automatskim čišćenjem, doboš sa pužem za krupni otpad

- proizvođač : SEFT
- tip : STV / C50
- protok : 50-60m3/h
- težina krupnog i redukovanje zapremine : ≥40-50%
- Vanjska konstrukcija od nerđajučeg čelika AISI304L
- Rezervoar od nerđajučeg čelika AISI304L
- Bezosovinske spirale od visokokarbonskog čelika bojenog RAL 6029
- Zavrtnji od A2
- Nehabajući materijal: ploče spojene zavrtnjima od nerđajučeg čelika AISI304L

- Utovarna korpa prečnika: Ø456 mm
- Prečnik puža za transport / kompakciju: Ø219 mm
- Vrsta filtracije: okrugli otvori
- Dimenzija: Ø10 mm
- Nagib: 35°
- Pravougaoni ispusni otvor za ispuštanje krupnog otpada 325 x 285 mm
- Čišćenje korpe preko najlonskih četki
- Ulaz: alum. DN100 Perrot sa/motorizovanim ventilom (24V)
- Izlaz: alum. DN200 PN10
- Ukupna dužina: 3.590 mm (bez motora)
- Visina ispuštanja: 1.500 mm od nivoa zemlje
- Sistem pranja u kompakcionoj zoni sa manualnim ventilom
- Sistem pranja u utovarnoj zoni sa manualnim ventilom
- Sistem pranja u ulaznoj zoni septičke jame sa manualnim ventilom
- PE disajni ventil na erezervoaru sa pužnim sitom
- PE cijev za vraćanje tečnosti kompakcione zone
- Predispozicija za senzor nivoa šipke
- Granični prekidači za otvore
- Teleskopsko potporno postolje od nerđajučeg čelika AISI 304L
- Ušičasti vijci

<u>Puž</u>

-Motor 1,1 kW, 400V, 50Hz, 3-fazni, 4-polni, IP55, F klasa, 11 o/min, BONFIGLIOLI

3/12/18
GEORGIOS KARKANIAS
PRESIDENT

2.7 Jedna (1) potapajuća mješalica sa uređajem za dizanje u rezervoaru za sakupljanje kanalizacionog otpada (septage collection tank)

- proizvođač mješalice	: WILO
- tip	: TR 21.145-4/11 S14
- prečnik propelera	: 210mm
- brzina propelera	: 1390rpm
- nominalna snaga	: 1,3 KW
- električni ulaz (radna tačka)	: 1,2 KW
- maksimalni električni ulaz	: 1,74 KW
- električni priključci	: 400V, 50Hz
- proizvođač uređaja za dizanje	: KARKANIAS SA

2.8 Dvije (2) potapajuće pumpe u rezervoaru za sakupljanje kanalizacionog otpada), jedna rezervna

- proizvođač	: WILO
- tip	: Rexa PRO V06 DA-623 / EAD1X4-T0015-540-O
- protok	: 5,2m3/h
- pad	: 6,4m
- brzina	: 1413rpm
- nominalna snaga	: 1,5 KW
- električni ulaz (radna tačka)	: 0,71 KW
-maksimalni električni ulaz	: 1,94 KW
- električni priključci	: 400V, 50Hz

2.9 Jedan (1) uređaj za dizanje (dizalica) za pumpe

- proizvođač	: KARKANIAS SA
- materijal	: st37
- kapacitet dizanja	: 250kg

2.10 Jedan (1) ultrazvučni mjerač nivoa

- proizvođač	: SIEMENS
- tip	: Sitrans Probe LU

3/12/18

GEORGIOS KARKANIAS PRESIDENT

Ultrazvučni transduktor sa 2-žičnom tehnologijom, za detektovanje nivoa i zapremine tečnosti i kanalizacionog mulja, kontinualno mjerenje od 0.3 do 6 m, frekvencija 54 kHz, komunikacija preko 4 – 20 mA / HART, dinamičko podešavanje omotača za eho analizu, automatsko prigušenje interferirajućeg eha, ambijentalna temperatura -40 – +80 °C, integrisana temperaturna kompenzacija, senzorski materijal PVDF kopolimer, plastično kućište, kablovski ulaz 2x M20 x 1.5, priključni vijak sa navojem G 2", EEPROM, programiranje preko infracrvenog prijemnika bez otvaranja uređaja, alfanumerički LC display, uputstva za rad, ručni programmer, stepen zaštite IP 67, uključujući montažnu konzolu od nerđajućeg čelika (1.4301), protunavrtku, isporuku i montažu spremno-za-rad.

2.11 Jedan (1) ventil za pražnjenje rezervoara pomoću gravitacije

- proizvođač : GEMAK
- tip : propusni (gate)

2.12 Jedan (1) spremnik za krupni otpad i šljunak

- proizvođač : VAN
- tip : NM-5V
- kapacitet : 5m3
- dimenzije (Š x D x V) : 1700 x 3000 x 1250mm

2.13 Jedna (1) automatska stanica za prijem kanalizacionog otpada

- Razvodna tabla sa svim funkcijama za automatski rad uređaja, identifikaciju i registraciju korisnika. Razvodna tabla je opremljena uređajem za automatsku regulaciju sa industrijskom-protokol komunikacijom.
- Registracioni uređaji za prijem, omogućavaju štampanje dokumenata o pristizanju i količini ispuštenih otpadnih voda
- Magnetske kartice za korisnike koje regulišu elektromotorni nožasti propusni ventil (šifra 2.1) pomoću evaluacionog sistema uređaja (u skladu sa kvalitetom otpadnih voda) i na osnovu regulacionog sistema WWTP (postrojenja za prečišćavanje otpadnih voda) (na primjer, dostizanje maksimalnog nivoa u rezervnom tanku)
- Jedan (1) ventil na električni pogon – cjevovod za vodu za ispiranje

2.14 Jedna (1) automatska stanica za prijem uzoraka kanalizacionog otpada (septage)

- proizvođač : HACH
- tip : AS950

<u>Uređaj za uzorkovanje</u>

Materijal kućišta: ABS plastika otporna na udar, postolje trodjelne kontrukcije sa dvostrukim zidom, izolacija 2.54 cm, direktan kontakt leda sa bocama (uzimač uzoraka)

Temperatura: Radna: 0 - 49 °C

Skladišna: -40 - 60 °C

3/12/18
GEORGIOS KARKANIAS
PRESIDENT

Uslovi napajanja (napon): 12 V DC

Dimenzije (Š x V x P) Standardna osnova: 50.5 cm x 69.4 cm

Težina Standardna: 15 kg sa (24) 1 L polietilenske boce

Regulator

Materijal kućišta: smjesa PC/ABS, NEMA 4X, 6, IP68, otporan na koroziju i led (regulator)

Display: 1/4 VGA, u boji; self-prompting/menu-driven program

Korisnički interface: Keypad (sklop tastera) sa membranskim prekidačem sa 2 meka tastera višestruke funkcije

Jezici korisničkog interface-a: engleski, francuski, španski, italijanski, njemački, portugalski, kineski

Blokirajuća funkcija: Zaštita pristupne šifre sprječava neovlašćeno preuzimanje

Memorija: Istorija uzorka: 4000 zapisa;

Bilježenje podataka (data log): 325,000 zapisa;

Bilježenje događaja (event log): 2000 zapisa

Mogućnosti komunikacije: USB i opciono RS485 (MODBUS)

Alati: Jedan 0/4-20 mA ulaz za praćenje protoka (flow pacing)

Certifikati: CE, UL2

Spremnici za uzorke (24) 1 L polietilenske boce

3/12/18

GEORGIOS KARKANIAS
PRESIDENT

3. PUMPNA STANICA

3.1 Četiri (4) cijevi za regulisanje protoka za izolaciju sita

- proizvođač	: KARKANIAS SA
- dimenzije (Š x V)	: 800 x 1000 mm
- materijal	: AISI 304

3.2 Jedno (1) grubo sito sa automatskim čišćenjem (sa višestrukim šipkama)

- proizvođač	: KARKANIAS SA
- kapacitet	: 130lt/s
- razmak šipki (širina proreza)	: 50mm
- visina ispuštanja	: 7,5 m
- širina kanala	: 800mm
- materijal	: AISI 304
- snaga	: 2,2KW
- električni priključci	: 400V, 50Hz

3.3 Jedno (1) grubo sito sa manualnim čišćenjem, rezervno

- proizvođač	: KARKANIAS SA
- kapacitet	: 130lt/s
- razmak šipki (širina proreza)	: 50mm
- širina	: 800 mm
- materijal	: AISI 304

3.4 Jedan (1) pužasti transporter za krupni otpad

- proizvođač	: KARKANIAS SA
- tip	: SC
- snaga	: 0,55KW
- električni priključci	: 400V, 50Hz
- materijal korita	: AISI304
- materijal puža	: S355

3/12/18
GEORGIOS KARKANIAS
PRESIDENT

3.5 Jedan (1) ultrazvučni diferencijalni mjerač nivoa

- proizvođač	: SIEMENS
- tip	: Sitrans L HydroRanger 200
	Echomax XRS 5 (sensor)

Ultrazvučni transduktor sa 2 ultrazvučna senzora za bezkontaktno mjerenje nivoa ispune, udaljenosti, zapremine, protoka, i tendencija na grabuljama (rakes), kao i u otvorenim ustavama, kanalima ili branama, diferencijalno mjerenje plus naizmjenična regulacija najmanje 6 pumpi u pumpnim osovinama. Predprogramirane aritmetičke operacije za linearizaciju Venturijevih ustava, pravougaonih ustava, vodoslivova ili V brana i polučaura. Utvrđivanje zapremine kao i regulisanje kišnice, ventilacionih pumpi i bazena za ispiranje, programiranje univerzalne trase sa 32 potporne tačke. Profibus DP komunikacija, dinamička adaptacije omotača za eho analizu, automatsko prigušenje interferirajućeg eha, ulaz 0 – 20 mA I 4 – 20 mA, izlaz 0 – 20 mA i 4 – 20 mA, opterećenje 750 ohm, 6 releja, nominalna snaga 5 A pri 250 V AC, 2 otvorena kontakta, 1 changeover kontakt/prekidač (za prebacivanje), tačnost 0.25 % MR, ambijentalna temperatura -20 – +50 °C, stepen zaštite omotača IP 65, display 100 mm x 40 mm LCD sa pozadinskim osvjetljenjem, pomoćna snaga 24 V DC.

Dvije odvojene mjerne tačke na udaljenosti od najmanje 10 m, mjerni opseg 0.3 – 8 m, zračni ugao 10°, frekvencija 44 kHz, integrisana temperaturna kompenzacija, IP 68, sa odobrenjem u skladu sa ATEX II 2 G senzora, uključujući montažne konzole od nerđajućeg čelika (1.4301), uputstva za rad, isporuku i montažu spremno-za-rad.

3.6 Jedan (1) spremnik za krupni otpad

- proizvođač	: VAN
- ttip	: NM-5V
- kapacitet	: 5m3
- dimenzije (Š x D x V)	: 1700 x 3000 x 1250mm

3.7 Jedno (1) postolje spremnika za otpad sa električnim pogonom

- proizvođač	: KARKANIAS SA
- utovarni kapacitet	: 9tn

3.8 Tri (3) potapajuće pumpe u pumpnoj stanici, jedna rezervna

- proizvođač	: WILO
- tip	: Rexa PRO C08 DA-435 / EAD1X2-T0039-540-O
- protok	: 51,4m3/h
- pad	: 15,6m
- brzina	: 2879 o/min
- nominalna snaga	: 3,9 KW

3/12/18

GEORGIOS KARKANIAS
PRESIDENT

- električni ulaz (radna tačka) : 3,8 KW
- maksimalni električni ulaz : 4,85 KW
- električni priključci : 400V, 50Hz

3.9 Tri (3) konvertera (invertera) frekvencije za pumpe

- proizvođač : SIEMENS
- tip : SINAMICS G120C
- snaga : 5,5KW

3.10 Jedan (1) elektromagnetno-induktivni mjerač protoka na pumpnoj ispusnoj cijevi

- proizvođač : SIEMENS
- tip : Sitrans F M MAG 5100 W (sensor)
  : Sitrans F M MAG 5000

Senzor protoka

Mjerač protoka za postrojenja za prečišćavanje vode i otpadnih voda za kompaktni ili separatni transmiter. Čvrsta NBR gumena obloga, integrisane elektrode za uzemljenje i mjerenje napravljene od Hastelloy C, veličina prirubnica u skladu sa EN 1092-1,ambijentalna temperatura -40 – +70 °C, temperatura sredine -10 – +70 °C, kućište prirubnice i mjerača protoka napravljeno je od bojenog čelika, priključna kutija sa uvodnicom M20, flash memorija za očuvanje kalibracije, verifikaciju podataka senzora, i očuvanje posebnig podešavanja klijenta, stepen zaštite IP 67, odobrenja PED-97/23EG, zamjenljivi dio kao rezervni,isporuka i montaža spremno-za-rad.

Transmiter

Transmiter sa mikroprocesorskom regulacijom u kompaktnoj ili offset izvedbi u poliamidskom kućištu sa armaturom od staklenih vlakana, display sa pozadinskim osvjetljenjem, trolinijski, alfanumerički za protok, brojač za prednji, povratni ili neto protok, indikacija smjera protoka, sveobuhvatna samo-dijagnostika za signaliziranje i registrovanje greške. Sklop tastera sa display jedinicom, smanjenje obima curenja, mjerni princip sa konstantnim pulsiranjem polja, automatsko nulto podešavanje, flash memorija za automatsku registraciju podataka o kalibraciji i verifikaciju senzorskih podataka kao i posebna podešavanja klijenta, mjerna greška 0,4 %, istovremeno korišćenje analognog izlaza 0/4 – 20 mA, pulsnog izlaza, digitalnog ulaza i izlaza, relejnog izlaza 24 V DC/1 A, kao i električne izolacije ulaza i izlaza. Ambijentalna temperatura -20 - +60 °C, električno napajanje 24 V DC, stepen zaštite IP 67, isporuka i montaža spremno-za-rad.

3.11 Jedan (1) uktrazvučni mjerač nivoa

- proizvođač : SIEMENS
- tip : Sitrans Probe LU

Ultrazvučni transduktor sa 2-žičnom tehnologijom, za detektovanje nivoa i zapremine tečnosti i kanalizacionog mulja, kontinualno mjerenje od 0.3 do 6 m, frekvencija 54 kHz, komunikacija

3/12/18

GEORGIOS KARKANIAS
PRESIDENT

preko 4 – 20 mA / HART, dinamičko podešavanje omotača za eho analizu, automatsko prigušenje interferirajućeg eha, ambijentalna temperatura -40 – +80 °C, integrisana temperaturna kompenzacija, senzorski materijal PVDF kopolimer, plastično kućište, kablovski ulaz 2x M20 x 1.5, priključni vijak sa navojem G 2", EEPROM, programiranje preko infracrvenog prijemnika bez otvaranja uređaja, alfanumerički LC display, uputstva za rad, ručni programmer, stepen zaštite IP 67, uključujući montažnu konzolu od nerđajučeg čelika (1.4301), protunavrtku, isporuku i montažu spremno-za-rad.

3.12 Jedan (1) uređaj za dizanje (jednošinski) za pumpnu stanicu

- proizvođač : KARKANIAS SA
- materijal : st37
- kapacitet dizanja : 500kg

3.13 Jedna (1) membrana za plutajuće materije

- proizvođač : KARKANIAS SA
- materijal : AISI 304

3.14 Jedna (1) cijev za regulisanje protoka

- proizvođač : KARKANIAS SA
- dimenzije (Š x V) : 800 x 800 mm
- materijal : AISI 304

3/12/18
GEORGIOS KARKANIAS
PRESIDENT

4. UREĐAJ ZA MEHANIČKO PREDPREČIŠĆAVANJE OTPADNIH VODA

4.1 Dva (2) ventila na obilaznom cjevovodu i ulaznom cjevovodu

- proizvođač : GEMAK
- tip : propusni (gate)

4.2 Jedan (1) kompaktni uređaj za mehaničko predprečišćavanje

- proizvođač : SEFT
- tip : GDF / D30 - FCP/C50
- protok : 30lt/sec
- redukcija težine i zapremine krupnog otpada : ≥30-40%
- efikasnost uklanjanja pijeska (čestice>200μm) i gustina iznad 1,65 Kg/dm3 : ≥90%

Pužna rešetka FCP/C 50 sa kompakcijom (sabijanjem)

- Prečnik utovarne korpe: Ø456 mm
- Prečnik puža za transport / kompakciju: Ø219 mm
- Tip filtracije: okrugli otvori
- Dimenzije: Ø6 mm
- Nagib: 35°
- Kvadratni ispusni otvor za ispuštanje krupnog otpada
- Čišćenje korpe pomoću najlonskih četki
- Motor 1,1 kW, 400V – 50Hz – 3-fazni, 4-polni, IP55, F klasa
- Zupčasti reduktor, beskrajni vijak/puž, 11 o/min

Rezervoar za taloženje pijeska

Horizontalni pužasti transporter i transport pijeska mod. TSA 200

- Bezosivinski puž prečnika: Ø180mm
- Visokokarbonski čelični profil, razmak/pitch1/1, debljina. 20mm
- Sa mehaničkom vodonepropusnom grupom
- Motor 0,55 kW, 400V – 50Hz – 3-fazni, 4-polni, IP55, F klasa
- Zupčasti reduktor, beskrajni vijak, 5 o/min

3/12/18
GEORGIOS KARKANIAS
PRESIDENT

Pužasti transporter za ekstrakciju pijeska mod. TSA"T" 168

- Bezosovinski puž, prečnik: Ø168mm
- Visokokarbonski čelični profil, razmak/pitch 1/1, debljina. 20mm
- Sa mehaničkom vodonepropusnom grupom
- Motor 0,37 kW, 400V – 50Hz – 3-fazni, 4-polni, IP55, F klasa
- zupčasti reduktor, beskrajni vijak, 5 o/min

Sistem produvavanja

Električni uređaj za produvavanje

Brzina protoka: 25 m3/h
Pritisak: 150 mbar
Motor: 0,25 kW, 380V, 50hz, 3-fazni, IP55, F klasa
1" podešavanje
Bočna ugradnja, sa crijevima od nerđajučeg čelika
Retencioni ventil, usisni ventil, tlačni ventil
Ožičenje i ugradnja uključeni

Uklanjanje masti / ulja, sistem "prednjeg & stražnjeg točka"

Motor 0,37 kW, 400V – 50Hz – 3-fazni, 4-polni, IP55, F klasa

Vanjska konstrukcija od nerđajučeg čelika AISI316 L
Rezervoarii od nerđajučeg čelika AISI316 L
Bezosovinski puževiod visokokarbonskog čelika, bojenog, RAL6029
Zavrtnji od A2
Nehabajući material: ploče spojene zavrtnjima od nerđajučeg čelikaAISI316 L
Ulaz: alum. DN250 PN10
Izlaz: alum. DN250 PN10
Izlaz za odmašćivanje: Sa prirubnicom alum. DN100 PN10
Ukupne dimenzije:
Ukupna visina: 6955 mm
Dužina taložnog rezervoara: 6.000 mm
Ukupna širina: 1.420 mm
Ukupna visina nakon ugradnje: 3.055 mm

3/12/18
GEORGIOS KARKANIAS
PRESIDENT

Pumpa za mast

Proizvođač: SYDEX

Brzina protoka: 400 lt/h (90 o/min)

Pritisak: 4 bar

Motor: 1,1 kW, 2,45A, 380V, 50hz, 3 faze, IP55

Komandna tabla

PLC stepen zaštite IP65, 400 V

Od fiber stakla sa dugmadima + dugme u slučaju opasnosti

Manualni start/stop i start/stop selektori za automatski ciklus

Svjetla upozorenja: linija, mašina u radu, termički alarm

Dokumentacija: električna šema komandne table + CE deklaracija o usklađenosti

Predispozicija za daljinsku kontrolu za start/stop sa signalom termičkog alarma

Ožičenje uključeno

Ventilacija (ukoliko je potrebno)

Grijanje uključeno

Potrošnja i radno vrijeme

Komunikaciona kartica za industrijski protokol uključena

4.3 Četiri (2+2) spremnika za krupni otpad i pijesak

- proizvođač	: VAN
- tip	: NM-5V
- kapacitet	: 5m3
- domenzije (Š x D x V)	: 1700 x 3000 x 1250mm

4.4 Jedno (1) postolje spremnika za krupni otpad sa električnim pogonom

- proizvođač	: KARKANIAS SA
- utovarni kapacitet	: 9tn

4.5 Jedno (1) postolje spremnika za pijesak sa električnim pogonom

- proizvođač	: KARKANIAS SA
- utovarni kapacitet	: 9tn

3/12/18

GEORGIOS KARKANIAS
PRESIDENT

5. PROCES BIOLOŠKOG PREČIŠĆAVANJA

5.1 KOMORA I ZA DISTRIBUCIJU PROTOKA

5.1.1 Jedna (1) prelivna pregrada za distribuciju protoka

- proizvođač : KARKANIAS SA
- materijal : AISI 304

5.1.2 Jedan (1) ventil na cjevovodu

- proizvođač : GEMAK
- tip : propusni (gate valve)

5.1.3 Jedan (1) prelivni teleskopski ventil za premošćavanje

- proizvođač : KARKANIAS SA
- materijal : AISI 304

5.2 BAZEN ZA PRE-DENITRIFIKACIJU

5.2.1 Jedna (1) potapajuća mješalica sa uređajem za dizanje u retervoaru za pre-denitrifikaciju : WILO

- tip : TR 50-2.34-4/12 S
- prečnik propelera : 500mm
- brzina propelera : 338 o/min
- nominalna snaga : 4,5 KW
- električni ulaz (radna tačka) : 4,4 KW
- maksimalni električni ulaz : 5,8 KW
- električni priključci : 400V, 50Hz
- proizvođač uređaja za dizanje : KARKANIAS SA

5.3 CIRKULACIONI SPREMNIK ZA AKTIVNI MULJ

5.3.1 Dvije (2) potapajuće mješalice sa uređajima za dizanje, jedna po koridoru

- proizvođač mješalica : XYLEM
- tip : SR 4410 400
- prečnik propelera : 2500mm

3/12/18
GEORGIOS KARKANIAS
PRESIDENT

- brzina propelera	: 27 o/min
- nominalna snaga	: 2,3 KW
- električni ulaz (radna tačka)	: 1,78 KW
- maksimalni električni ulaz	: 3,10 KW
- električni priključci	: 400V, 50Hz
- proizvođač uređaja za dizanje	: KARKANIAS SA

5.3.2 Dva (2) uređaja za produvavanje sa rotirajućim krilima za aeraciju, jedan rezervni, sa poklopcima za zaštitu od buke

- proizvođač	: ROBUSCHI
- tip	: ES65/2P
- protok	: 776Nm3/h
- diferencijalni pritisak	: 620mbar
- brzina uređaja za produvavanje	: 3366 o/min
- brzina motora	: 2945 o/min
- apsorbovana snaga	: 22 KW
- ulazna snaga	: 30 KW
- električni priključci	: 400V, 50Hz
- nivo zvučnog pritiska	: 74dBA

5.3.3 Dva (2) konvertera (invertera) frekvencije za uređaje za produvavanje

- proizvođač	: SIEMENS
- tip	: SINAMICS G 120C
- snaga	: 30KW

5.3.4 Jedan (1) uređaj za dizanje (jednošinski) za uređaje za produvavanje

- proizvođač	: KARKANIAS SA
- kapacitet dizanja	: 1000kg

5.3.5 Jedan (1) ventilator za ventilaciju objekta sa uređajima za produvavanje

- proizvođač	: Soler & Palau (S&P)
- tip	: HCFT/4-400/H
- protok	: 5070 m3/hr
- brzina	: 1350 o/min

3/12/18

GEORGIOS KARKANIAS
P.R. PRESIDENT

- snaga : 300W
- električni priključci : 400V, 50Hz

5.3.6 Jedan (1) glavni zračni cjevovod

- proizvođač : KARKANIAS SA
- materijal : AISI 304
- prečnik : DN150

5.3.7 Dvije (2) cijevi za distribuciju vazduha sa leptirastim ventilima za regulaciju ili izolaciju protoka

- proizvođač : KARKANIAS SA / EFFEBI
- materijal : AISI 304
- prečnik : DN100

5.3.8 Dvije (2) vazdušne rešetke za difuzore

- proizvođač : KARKANIAS SA
- materijal : PVC, 10atm
- prečnik : Φ110

5.3.9 Stodevedesetdva (192) difuzora sa finim bubble membranama (disk tipa), devedeset šest po rešetki

- proizvođač : XYLEM / SANITAIRE
- materijal : EPDM
- prečnik : 229mm
- protok (radna tačka) : 4,03m3/h
- efikasnost : 31%

5.3.10 Jedna (1) prelivna pregrada

- proizvođač : KARKANIAS SA
- materijal : AISI 304

5.3.11 Jedan (1) mjerač rastvorenog kiseonika

- proizvođač : HACH
- tip : SC1000/ LDO sc

Digitalni regulator SC1000 (sastoji se od modula sa sondom i retraktibilnog digitalnog display-a)

3/12/18
GEORGIOS KARKANIAS
PRESIDENT

Priključak sa 4 digitalne Hach sc sonde
Opseg radne temperature: -20 do 55 °C, 0 do 95% relativna vlažnost, bez kondenzacije
Uslovi skladištenja: -20 do 70 °C, 0 do 95% relativna vlažnost, bez kondenzacije
Uslovi napajanja (napon): 100 - 240 V AC, 24 V DC
Uslovi napajanja (Hz): 50/60 Hz
Display: 1/4 inči VGA grafički sa pozadinskim osvjetljenjem TFT boja staklo/glass-touch ekran, visoka otpornost, 320 x 240 piksela
Vidno područje display-a: 11.4 x 8.6 cm (4.5 x 3.4 in)
Alarm: niska alarmna tačka, mrtva zona niske alarmne tačke, visoka alarmna tačka, mrtva zona visoke alarmne tačke, off kašnjenje, i on kašnjenje
Releji: Do četiri SPDT, korisnički podesivi kontakti 100 do 230 VAC, 5 Amp maksimalni otpor po modulu sa sondama.Dostupni su i dodatni releji sa dodatnim modulima/sonde.
Ulazi: Do 12 analognih 0-20 mA, maksimalna impedanca 500 Ohms po modulu sa sondama. Dostupni su i dodatni analogni ulazi sa dodatnim modulima/sonde.
Izlazi: Do 12 analognih 0/4-20 mA, maksimalna impedanca 500 Ohms po modulu sa sondama. Dodatni analogni izlazi sa dodatnim modulima/sonde.Opciona digitalna komunikacija via Modbus® (RS485) i Profibus® DP/V1.
Komunikacija: Modbus® (RS485): Napredne komunikacije/umrežavanje sa PLC ili SCADA sistem direktno iz analizatora
Profibus® DP/V1 (certifikovan)
GSM/GPRS Quad-band celularni modul (FCC i IC odobren, samo EU i US)
Ethernet servisni port, RJ45, 10 MB/s
Montažna konfiguracija: Površina, ploča i cijev (horizontalna I vertikalna) sa opcionim štitnikom od sunca
Omotač: IP65
Materijal omotača: Omotači ABS (display modul) i metalni (modul sa sondama) sa završnim premazom otpornim na koroziju.
Dimenzije metričke (V x Š x Dub.): 150 mm x 315 mm x 250 mm
Evropska certifikacija: CE po 73/23/EEC i 89/336/EEC
TUV-GS do EN 61010-1
EN 61326 Amd's 1 & 2

Senzor (LDO sc)
Dimenzije (P x D): 48.25mm x 254mm
Vrijeme odziva: T90 < 40 s
T95 < 60 s
Brzina protoka: Ne traži se brzina protoka
Rezolucija: 0.01 mg/L (ppm) O2/0.1% saturacija
Radna temperatura: 0 do 50 °C

3/12/18
GEORGIOS KARKANIAS
PRESIDENT

Opseg pritiska: max. 10 bar
Težina: 1.0 kg
Interferencije. Nema interferencija od strane: H2S, pH, K^+, Na^+, Mg^{2+}, Ca^{2+}, $NH4^+$, Al^{3+}, Pb^{2+}, Cd^{2+}, Zn^{2+}, Cr (total), Fe^{2+}, Fe^{3+}, Mn^{2+}, Cu^{2+}, Ni^{2+}, Co^{2+}, CN^-, $NO3^-$, $SO4^{2-}$, S^{2-}, $PO4^{3-}$, Cl^- anjonskih surfaktanata, sirove nafte ili Cl2 < 4ppm
Dužina kabla: 10 m
Temperatura skladištenja: -20 to 70 °C (95% relativna vlažnost)
Materijali, senzorska kapa: akrilik
Tijelo sonde: CPVC, poliuretan, viton, noril, nerđajući čelik 1.4404 (AISI 316L)
Mjerni opseg: 0 do 20.00 mg/L (ppm) DO, 0 do 200% saturacija
Tačnost: ispod 5 mg/L O2 0.1 mg/L
Iznad 5 mg/L O2 0.2 mg/L
Omotač: IP 68
Senzorski konektor: 1 " NPT spoljni navoj
Temperaturna tačnost: 0.2 °C
Repeatibilnost (ponovljivost): 0.1 mg/L

5.3.12 Jedan (1) MLSS mjerač

- proizvođač	: HACH
- tip	: Solitax sc ts-line
- parametri	: suspendovane čvrste materije/mutnoća
- postupak mjerenja	: Čvrste materije - DIN 37414 Mutnoća DIN EN ISO 7027 DIN EN ISO 7027
-mjerni opseg	: Čvrste materije: 0.001 - 50 g/l Mutnoća: 0.001 - 4,000 FNU
-tačnost	:Čvrste materije - <5% Mutnoća <1% or 0.001
- vrijeme odziva	: 1 - 300 sec
- temperature uzorka	: 0 - 40 °C
- brzina protoka	: 3 m/s
- dubina potapanja	: 0.1 - 10 m
- opseg pritiska	: 1 bar
- dimenzije (Dub. x D)	: 60 x 200 mm
- kućište	: nerđajući čelik
- automatsko čišćenje	: sa automatskim brisačem
- dužina kabla	: 10 m fiksno, max.100 m produžni kabl

3/12/18
GEORGIOS KARKANIAS
PRESIDENT

5.3.13 Jedna (1) mješalica (vertikalna osovina) u izlaznoj šahti rezervoara

- proizvođač	: KARKANIAS SA
- materijal	: AISI 304
- brzina propelera	: 49 o/min
Zupčasti motor	
- proizvođač	: BONFIGLIOLI
- tip (zupčasti)	: VF49_28 / P71 BN71B4
- brzina motora	: 1400 o/min
- snaga	: 0,37KW
- električni priključci	: 400V, 50Hz

5.4 KOMORA II ZA DISTRIBUCIJU PROTOKA

5.4.1 Jedna (1) prelivna pregrada za distribuciju protoka

- proizvođač	: KARKANIAS SA
- materijal	: AISI 304

5.4.2 Jedan (1) ventil na cjevovodu

- proizvođač	: GEMAK
- tip	: propusni (gate)

5.4.3 Jedan (1) prelivni teleskopski ventil za premoščavanje

- proizvođač	: KARKANIAS SA
- materijal	: AISI 304

3/12/18
GEORGIOS KARKANIAS
PRESIDENT

5.5 BAZEN ZA FINALNO TALOŽENJE

5.5.1 Jedan (1) rotirani radijalni most sa skrejperima (scrapers) dna i površine

- proizvođač	: KARKANIAS SA
- materijal (skrejperi i svi zaronjeni dijelovi)	: AISI 304
- materijal (most)	: toplo pocinkovani čelik
- širina mosta	: 800mm
Zupčasti motor	
- proizvođač	: BONFIGLIOLI
- tip (zupčasti)	: MVF44_86FC_700 / P71 BN71B4
- brzina motora	: 1400 o/min
- snaga	: 0,37KW
- električni priključci	: 400V, 50Hz, IP55

5.5.2 Jedan (1) skimer (skimmer) za pjenu

- proizvođač	: KARKANIAS SA
- materijal	: AISI 304

5.5.3 Jedan (1) bazen za ulaznu vodu (influent)

- proizvođač	: KARKANIAS SA
- materijal	: AISI 304
- dimenzije (Dub. x V)	: 2500 x 1250 mm

5.5.4 Jedna (1) periferna prelivna pregrada (V- žlijeb)

- proizvođač	: KARKANIAS SA
- materijal	: AISI 304
- V dimenzije (dužina x dubina x razmak)	: 100 x 50 x 150 mm
- visina	: 250 mm

5.5.5 Jedna (1) periferna membrana za pjenu

- proizvođač	: KARKANIAS SA
- materijal	: AISI 304
- visina	: 400 mm

3/12/18

GEORGIOS KARKANIAS
PRESIDENT

5.6 PUMPNA STANICA ZA POVRATNI AKTIVNI MULJ I VIŠAK MULJA

5.6.1 Dvije (2) potapajuće pumpe za povratni mulj, jedna rezervna

- proizvođač	: WILO
- tip	: Rexa PRO C10 DA-518/ EAD0X4-T0035-540-O
- protok	: 99,8m3/h
- pad	: 7,7m
- brzina	: 1393 o/min
- nominalna snaga	: 3,45 KW
- električni ulaz (radna tačka)	: 3,75 KW
- maksimalni električni ulaz	: 4,45 KW
- električni priključci	: 400V, 50Hz

5.6.2 Dva (2) konvertera (invertera) frekvencije za pumpe povratnog mulja

- proizvođač	: SIEMENS
- tip	: SINAMICS G 120C
- snaga	: 5,5KW

5.6.3 Jedan (1) elektromagetno-induktivni mjerač protoka za povratni mulj

- proizvođač	: SIEMENS
- tip	: Sitrans F M MAG 5100 W (senzor)
	: Sitrans F M MAG 5000

Senzor protoka

Mjerač protoka za postrojenja za prečišćavanje vode i otpadnih voda za kompaktni ili separatni transmiter. Čvrsta NBR gumena obloga, integrisane elektrode za uzemljenje i mjerenje napravljene od Hastelloy C, veličina prirubnica u skladu sa EN 1092-1,ambijentalna temperatura -40 – +70 °C, temperatura sredine -10 – +70 °C, kućište prirubnice i mjerača protoka napravljeno je od bojenog čelika, priključna kutija sa uvodnicom M20, flash memorija za očuvanje kalibracije, verifikaciju podataka senzora, i očuvanje posebnih podešavanja klijenta, stepen zaštite IP 67, odobrenja PED-97/23EG, zamjenljivi dio kao rezervni,isporuka i montaža spremno-za-rad.

Transmiter

Transmiter sa mikroprocesorskom regulacijom u kompaktnoj ili offset izvedbi u poliamidskom kućištu sa armaturom od staklenih vlakana, display sa pozadinskim osvjetljenjem, trolinijski, alfanumerički za protok, brojač za prednji, povratni ili neto protok, indikacija smjera protoka, sveobuhvatna samo-dijagnostika za signaliziranje i registrovanje greške. Sklop tastera sa display jedinicom, smanjenje obima curenja, mjerni princip sa konstantnim pulsiranjem polja, automatsko nulto podešavanje, flash memorija za automatsku registraciju podataka o

3/12/18

GEORGIOS KARKANIAS PRESIDENT

kalibraciji i verifikaciju senzorskih podataka kao i posebna podešavanja klijenta, mjerna greška 0.4 %, istovremeno korišćenje analognog izlaza 0/4 – 20 mA, pulsnog izlaza, digitalnog ulaza i izlaza, relejnog izlaza 24 V DC/1 A, kao i električne izolacije ulaza i izlaza. Ambijentalna temperatura -20 - +60 °C, električno napajanje 24 V DC, stepen zaštite IP 67, isporuka i montaža spremno-za-rad.

5.6.4 Jedan (1) ultrazvučni mjerač nivoa

- proizvođač : SIEMENS
- tip : Sitrans Probe LU

Ultrazvučni transduktor sa 2-žičnom tehnologijom, za detektovanje nivoa i zapremine tečnosti i kanalizacionog mulja, kontinualno mjerenje od 0.3 do 6 m, frekvencija 54 kHz, komunikacija preko 4 – 20 mA / HART, dinamičko podešavanje omotača za eho analizu, automatsko prigušenje interferirajućeg eha, ambijentalna temperatura -40 – +80 °C, integrisana temperaturna kompenzacija, senzorski materijal PVDF kopolimer, plastično kućište, kablovski ulaz 2x M20 x 1.5, priključni vijak sa navojem G 2", EEPROM, programiranje preko infracrvenog prijemnika bez otvaranja uređaja, alfanumerički LC display, uputstva za rad, ručni programmer, stepen zaštite IP 67, uključujući montažnu konzolu od nerđajućeg čelika (1.4301), protunavrtku, isporuku i montažu spremno-za-rad.

5.6.5 Dva (2) uređaja za dizanje za pumpe, jedan za pumpu za višak mulja i jedan za pumpu za povratni mulj

- proizvođač : KARKANIAS SA
- materijal : st37
- kapacitet dizanja : 250kg

5.6.6 Dvije (2) potapajuće pumpe za višak mulja, jedna rezervna

- proizvođać : WILO
- tip : Rexa PRO V05 DA-222/ EAD1X2-T0025-540-O
- protok : 26,1m3/h
- pad : 10,1m
- brzina : 2848 o/min
- nominalna snaga : 2,5 KW
- električni ulaz (radna tačka) : 2,2 KW
- maksimalni električni ulaz : 3,2 KW
- električni priključci : 400V, 50Hz

3/12/18

GEORGIOS KARKANIAS
PRESIDENT

5.6.7 Dva (2) konvertera (invertera) frekvencije za pumpe za višak mulja

- proizvođač : SIEMENS
- tip : SINAMICS G 120C
- snaga : 4KW

5.6.8 Jedan (1) elektromagnetno-induktivni mjerač protoka za višak mulja

- proizvođač : SIEMENS
- tip : Sitrans F M MAG 5100 W (senzor)
  : Sitrans F M MAG 5000

Senzor protoka

Mjerač protoka za postrojenja za prečišćavanje vode i otpadnih voda za kompaktni ili separatni transmiter. Čvrsta NBR gumena obloga, integrisane elektrode za uzemljenje i mjerenje napravljene od Hastelloy C, veličina prirubnica u skladu sa EN 1092-1,ambijentalna temperatura -40 – +70 °C, temperatura sredine -10 – +70 °C, kućište prirubnice i mjerača protoka napravljeno je od bojenog čelika, priključna kutija sa uvodnicom M20, flash memorija za očuvanje kalibracije, verifikaciju podataka senzora, i očuvanje posebnig podešavanja klijenta, stepen zaštite IP 67, odobrenja PED-97/23EG, zamjenljivi dio kao rezervni,isporuka i montaža spremno-za-rad.

Transmiter

Transmiter sa mikroprocesorskom regulacijom u kompaktnoj ili offset izvedbi u poliamidskom kućištu sa armaturom od staklenih vlakana, display sa pozadinskim osvjetljenjem, trolinijski, alfanumerički za protok, brojač za prednji, povratni ili neto protok, indikacija smjera protoka, sveobuhvatna samo-dijagnostika za signaliziranje i registrovanje greške. Sklop tastera sa display jedinicom, smanjenje obima curenja, mjerni princip sa konstantnim pulsiranjem polja, automatsko nulto podešavanje, flash memorija za automatsku registraciju podataka o kalibraciji i verifikaciju senzorskih podataka kao i posebna podešavanja klijenta, mjerna greška 0,4 %, istovremeno korišćenje analognog izlaza 0/4 – 20 mA, pulsnog izlaza, digitalnog ulaza i izlaza, relejnog izlaza 24 V DC/1 A, kao i električne izolacije ulaza i izlaza. Ambijentalna temperatura -20 - +60 °C, električno napajanje 24 V DC, stepen zaštite IP 67, isporuka i montaža spremno-za-rad.

5.6.9 Jedan (1) ventil na cjevovodu za mulj

- proizvođač : GEMAK
- tip : propusni (gate)

3/12/18

GEORGIOS KARKANIAS
PRESIDENT

5.7 HEMIJSKA FOSFORNA PRECIPITACIJA

5.7.1 Tri (3) dozirne pumpe (sa membranom) za hemijski rastvor za fosfornu precipitaciju, jedna rezervna, sa cijevima i ventilima

- proizvođač	: GRUNDFOS
- tip	: DDA30-4
- protok	: 30lt/h
- pritisak	: 4bar
- snaga	: 24W
- električni priključci	: 240V, 50Hz, IP65
- materijal dozirne glave	: PVC (polivinil hlorid)
- materijal kuglastog zapornika	: Keramički
- material zaptivke	: FKM
- analogni regulator 0/4-20 mA (podesiv)	

5.7.2 Jedan (1) elektromagnetno-induktivni mjerač protoka za hemijski rastvor za fosfornu precipitaciju

- proizvođač	: SIEMENS
- tip	: Sitrans F M MAG 5100 W (senzor)
	: Sitrans F M MAG 5000

Senzor protoka

Mjerač protoka za postrojenja za prečišćavanje vode i otpadnih voda za kompaktni ili separatni transmiter. Čvrsta NBR gumena obloga, integrisane elektrode za uzemljenje i mjerenje napravljene od Hastelloy C, veličina prirubnica u skladu sa EN 1092-1,ambijentalna temperatura -40 – +70 °C, temperatura sredine -10 – +70 °C, kućište prirubnice i mjerača protoka napravljeno je od bojenog čelika, priključna kutija sa uvodnicom M20, flash memorija za očuvanje kalibracije, verifikaciju podataka senzora, i očuvanje posebnih podešavanja klijenta, stepen zaštite IP 67, odobrenja PED-97/23EG, zamjenljivi dio kao rezervni,isporuka i montaža spremno-za-rad.

Transmiter

Transmiter sa mikroprocesorskom regulacijom u kompaktnoj ili offset izvedbi u poliamidskom kućištu sa armaturom od staklenih vlakana, display sa pozadinskim osvjetljenjem, trolinijski, alfanumerički za protok, brojač za prednji, povratni ili neto protok, indikacija smjera protoka, sveobuhvatna samo-dijagnostika za signaliziranje i registrovanje greške. Sklop tastera sa display jedinicom, smanjenje obima curenja, mjerni princip sa konstantnim pulsiranjem polja, automatsko nulto podešavanje, flash memorija za automatsku registraciju podataka o kalibraciji i verifikaciju senzorskih podataka kao i posebna podešavanja klijenta, mjerna greška 0.4 %, istovremeno korišćenje analognog izlaza 0/4 – 20 mA, pulsnog izlaza, digitalnog ulaza i izlaza, relejnog izlaza 24 V DC/1 A, kao i električne izolacije ulaza i izlaza. Ambijentalna temperatura -20 - +60 °C, električno napajanje 24 V DC, stepen zaštite IP 67, isporuka i montaža spremno-za-rad.

3/12/18

GEORGIOS KARKANIAS
PRESIDENT

5.7.3 Jedan (1) rezervoar sa dvostrukim zidom za hemijski rastvor za fosfornu precipitacije, sa tri prekidača nivoa

- kapacitet	: 15.000lt
- materijal	: HDPE
- dimenzije (Dub. x V)	: 2750 x 3050 mm

5.7.4 Dvije (2) pumpe (na magnetni pogon, plastične, centrifugalne) za hemijski rastvor, jedna rezervna

- proizvođač	: MPumps
- tip	: CM MAG P15
- protok	: 15m3/h
- manometarska visina	: 12m
- brzina	: 2900 o/min
- snaga	: 1,1KW
- električni priključci	: 400V, 50Hz, IP55
- materijal (tijelo, poklopac, impeler)	: Polipropilen

3/12/18

GEORGIOS KARKANIAS
PRESIDENT

6. JEDINICA ZA FILTRACIJU

6.1 Jedna (1) prelivna cijev ra regulisanje protoka, za distribuciju i izolaciju protoka u spremniku sa prečišćivačem

- proizvođač	: KARKANIAS SA
- dimenzije (Š x V)	: 800 x 500 mm
- materijal	: AISI 304

6.2 Jedna (1) cijev za regulisanje protoka, za premošćavanje

- proizvođač	: KARKANIAS SA
- dimenzije (Š x V)	: 500 x 500 mm
- materijal	: AISI 304

6.3 Jedan (1) filter rotirajućeg doboša na mikro situ sa automatskim čišćenjem za tercijarno prečišćavanje otpadnih voda

- proizvođač	: IN EKO Team sro
- tip	: 3FBB
- protok	: max 50lt/sec
- ukupna filtraciona površina	: 3,75m2
- aktivna filtraciona površina	: 2,39m2
- snaga	: 2,37KW
- električni priključci	: 400V, 50Hz
- pore filtracionog platna (veličina otvora)	: 40μm
- material filtracionog platna	: poliamid
- materijal filtera (okvir)	: AISI 304

<u>Dimenzije doboša</u>

- prečnik	: 930mm
- dužina	: 1500mm

<u>Dimenzije rezervoara</u>

- širina	: 1150m
- dužina	: 2800m
- visina	: 1250m

3/12/18

GEORGIOS KARKANIAS
PRESIDENT

- prekidači nivoa (3 stavke)
- komandni ormarić (1 stavka)
- sistem povratnog pranja (povratnom vodom)
- pumpa za pranje (1 stavka)
- drenažna pumpa (za mulj) (1 stavka)

Izlazna prelivna pregrada

- materijal : AISI 304

3/12/18

GEORGIOS KARKANIAS
PRESIDENT

7. UV DEZINFEKCIONA JEDINICA – IZLAZNA VODA (EFLUENT)

7.1 Dvije (2) prelivne cijevi za regulisanje protoka, za izolaciju UV kanala

- proizvođač	: KARKANIAS SA
- dimenzije (Š x V)	: 612 x 600 mm
- materijal	: AISI 304

7.2 Jedan (1) UV dezinfekcioni sistem sa automatskim čišćenjem

- proizvođač	: ULTRAQUA
- tip	: MR16-220SS kanal
- protok	: 108m3/h (30lt/sec)
- projektovani.UV prenos / 10 mm, UVT	: 70%
- projektovana UV doza, EOLL	: > 85 mJ/cm2
- kalkulisana UV doza, EOLL	: 86,3 mJ/cm2
- temperature otpadnih voda	: 5 - 35 °C
- fekalne koliformne bakterije (F.C.) UV ulaz	: 100.000 CFU/100ml
- fekalne koliformne kakterije (F.C.) UV izlaz	: ≤ 20 CFU/100ml (95% uzoraka)
- broj UV-lampi /sijalica	: 16
- materijal reaktora	: AISI316L
- materijal manjih dijelova	: PTFE/PVDF/VITON/POM
- dubina vode	: 1120-1400mm (vertikalno)
- dubina kanala	: 604 +/-8,0mm
- konfiguracija reaktora	: 1 blok sa 16 sijalica
- tip sijalica	: niskotlačne, visoko-učinkovite, amalgam
- vijek trajanja sijalica	: 16000 h
- omotač žice	: PTFE
- snaga sijalice / po sijalici	: 220W
- snaga	: 3,8 kW
- temperaturni senzor	: Danfoss pT100

Izlazna prelivna pregrada

- materijal	: AISI 304

3/12/18

GEORGIOS KARKANIAS
PRESIDENT

Pobude za sijalice (balast)	
Broj pobuda po sistemu	4
Proizvod	4x220W UltraAqua 220W serija
Tip	Elektronski HF modbus kontrolisan
Serijska komunikacija	modbus Daisy chain RJ45 ožičenje
Faktor snage	> 0.98
Efikasnost	95% pri nominalnoj snazi
Kontinuirani monitoring	Individualni električni parametri sijalice
Zaštita	greška uzemljenja, temperatura, ulazni napon
Ugrađena dijagnostika	LED indikatori
Proizvedeno u	Holandiji

Komandni ormarić	
Materijal	GFRP (opciono nerđajući čelik AISI304)
HMI	3.4" ekran osjetljiv na dodir, menu driven
Regulacja sistema	PLC
Ugradnja	Na zid
Dimenzije ormarića	700x500x300mm
Dužina sijaličnog kabla	5,0m (max dužina 30,0m)
Tip sijaličnog kabla	Silikonski / UL Style 4476 i CSA AWM II A/B
Električno napajanje	3x400VAC+N+Pe,47-63 Hz
Snaga	3,9 kW @ 100% nivo snage
Temperatura	0-45 °C
Termička regulacija	Prisilno hlađenje
Relativna vlažnost	20-95% bez kondenzacije
Tip omotača	IP54 (Opciono IP55-IP68)
Odobrenje	CE
Proizvedeno u	Danskoj

3/12/18
GEORGIOS KARKANIAS
PRESIDENT

7.3 Jedan (1) ultrazvučni mjerač protoka sa Parshall-ovim vodomjerom

- proizvođač : SIEMENS
- tip : Sitrans LUT 430 (transduktor)
  Echomax XRS 5 (senzor)

Ultrazvučni transduktor sa ultrazvučnim senzorom za bezkontaktno mjerenje nivoa ispune, udaljenosti, zapremine, protoka, tendencija ili količina u otvorenim ustavama, kanalima ili branama sa algoritmima za uštedu energije i vremena - izračunavanje prelivanja, predprogramirane aritmetičke operacije za linearizaciju Parshall-ovih ustava, pravougaonih ustava, vodoslivova ili V brana i polučaura, utvrđivanje zapremine kao i regulisanje kišnice, ventilacionih pumpi i bazena za ispiranje, programiranje univerzalne trase sa 40 potpornih tačaka, programiranje pomoću lokalnih tastera ili EDD- ili DTM-baziranog softvera, dinamička adaptacija omotača za eho analizu, automatsko prigušenje interferirajućeg eha, HART komunikacije, registrovanje podataka, izvor napajanja 100 - 230 V AC, izlazna snaga 4 mA – 20 mA, opterećenje 600 ohm, 3 releja nominalne snage 5 A pri 250 V AC, 2 otvorena kontakta, 1 changeover kontakt/prekidač (za prebacivanje), tačnost 0.17 %, stepen zaštite omotača IP 65, ambijetalna temperatura -20 – +50 °C, LCD display 60 mm x 40 mm sa pozadinskim osvjetljenjem, sa mogućnošću parametarskog backup-a.

Ultrazvučni senzor sa priključnim kablom 10 m, mjernim opsegom 0.3 – 8 m, ugao snopa 10°, mjerna frekvencija 44 kHz, stepen zaštite IP65/IP68, odobrenje u skladu sa CE, FM, CSA(US/C), UL, C-TICK, integrisana temperaturna kompenzacija, ambijentalna temperatura -20 – +50°C, uključujući uputstva za rad, materijal za montiranje, isporuku i montažu spremno-za-rad.

7.4 Jedna (1) automatska stanica za prijem uzoraka prečišćenih otpadnih voda

- proizvođač : HACH
- tip : AS950

Uređaj za uzorkovanje

Materijal kućišta: ABS plastika otporna na udar, postolje trodjelne kontrukcije sa dvostrukim zidom, izolacija 2.54 cm, direktan kontakt leda sa bocama (uzimač uzoraka)

Temperatura: Radna: 0 - 49 °C

Skladišna: -40 - 60 °C

Uslovi napajanja (napon): 12 V DC

Dimenzije (Š x V x Pr) Standardna osnova: 50.5 cm x 69.4 cm

Težina Standardna: 15 kg sa (24) 1 L polietilenske boce

Regulator

Materijal kućišta: PC/ABS blend, NEMA 4X, 6, IP68, otporan na koroziju i led (regulator)

Display: 1/4 VGA, boja; self-prompting/menu-driven program

Korisnički interface: Keypad (sklop tastera) sa membranskim prekidačem sa 2 meka tastera višestruke funkcije

3/12/18

GEORGIOS KARKANIAS
PRESIDENT

Jezici korisničkog interface-a: engleski, francuski, španski, italijanski, njemački, portugalski, kineski

Blokirajuća funkcija: Zaštita pristupne šifre sprječava neovlašćeno preuzimanje.

Memorija: Istorija uzorka: 4000 zapisa;
Bilježenje podataka (data log): 325,000 zapisa;
Bilježenje događaja (event log): 2000 zapisa

Mogućnosti komunikacije: USB i opciono RS485 (MODBUS)

Ulazi: Jedan 0/4-20 mA ulaz za tempiranje protoka

Certifikati: CE, UL2

Spremnik za uzorke

(24) 1 L polietilenske boce

7.5 Jedna (1) potapajuća pumpa za servisni rezervoar za vodu

- proizvođač	: WILO
- tip	: Rexa PRO V05 DA-222/ EAD1X2-T0025-540-O
- protok	: 12,8m3/h
- pad	: 13,8m
- brzina	: 2848 o/min
- nominalna snaga	: 2,5 KW
- električni ulaz (radna tačka)	: 1,6 KW
- maksimalni električni ulaz	: 3,2 KW
- električni priključci	: 400V, 50Hz

7.6 Tri (3) prekidača nivoa za rad potapajućih pumpi

7.7 Jedan (1) uređaj za dizanje za potapajuću pumpu

- proizvođač	: KARKANIAS SA
- materijal	: st37
- kapacitet dizanja	: 250kg

7.8 Jedna (1) prelivna pregrada na UV izlaznom šahtu

- proizvođač	: KARKANIAS SA
- materijal	: AISI 304

3/12/18
GEORGIOS KARKANIAS
PRESIDENT

8. JEDINICE ZA PREČIŠĆAVANJE MULJA

8.1 REZERVOAR ZA AEROBNU STABILIZACIJU I ZGUŠNJAVANJE MULJA

8.1.1 Jedna (1) potapajuća mješalica sa uređajem za dizanje

- proizvođač mješalice	: WILO
- tip	: TR 36.145-4/12 S17
- prečnik propelera	: 250mm
- brzina propelera	: 1400 o/min
- nominalna snaga	: 4,5 KW
- električni ulaz (radna tačka)	: 4,95 KW
- maksimalni električni ulaz	: 5,8 KW
- električni priključci	: 400V, 50Hz
- proizvođač uređaja za dizanje	: KARKANIAS SA

8.1.2 Jedan (1) potapajući jet aerator, sa jednom extra pumpom

- proizvođač	: WILO
- tip	: J- OXY 250 2/150/95 35(50) Pumpa FA 20.54E T24 - 4/29K
- protok vazduha	: 620Nm3/hr
- visina mulja	: 4,5m
- brzina	: 1450 o/min
- snaga	: 25KW
- električni priključci	: 400V, 50Hz
- prečnik mlaza (jet)	: 2 * DN150

8.1.3 Jedan (1) ultrazvučni mjerač nivoa

- proizvođač	: SIEMENS
- tip	: Sitrans Probe LU

Ultrazvučni transduktor sa 2-žičnom tehnologijom, za detektovanje nivoa i zapremine tečnosti i kanalizacionog mulja, kontinualno mjerenje od 0.3 do 6 m, frekvencija 54 kHz, komunikacija preko 4 – 20 mA / HART, dinamičko podešavanje omotača za eho analizu, automatsko prigušenje interferirajućeg eha, ambijentalna temperatura -40 – +80 °C, integrisana temperaturna kompenzacija, senzorski materijal PVDF kopolimer, plastično kućište, kablovski ulaz 2x M20 x 1.5, priključni vijak sa navojem G 2", EEPROM, programiranje preko infracrvenog prijemnika bez otvaranja uređaja, alfanumerički LC display, uputstva za rad, ručni programmer, stepen zaštite IP 67, uključujući montažnu konzolu od nerđajućeg čelika (1.4301), protunavrtku, isporuku i montažu spremno-za-rad.

3/12/18

GEORGIOS KARKANIAS
PRESIDENT

8.1.4 Tri (3) prekidača nivoa

8.1.5 Jedan (1) uređaj za dizanje za jet aerator

- proizvođač	: KARKANIAS SA
- materijal	: st37
- kapacitet dizanja	: 500kg

8.1.6 Dvije (2) drenažne prelivne cijevi sa propusnim ventilima

- proizvođač (cijev / ventil)	: KARKANIAS SA / GEMAK
- material cijevi	: AISI 304

8.1.7a Dva (2) maceratora (pumpe drobilice)

- proizvođač	: NOV PROCESS (MONO PUMPS)
- tip	: MUNCHER CT201DAW*B2
- protok (max)	: 12m3/h
- brzina	: 65 o/min
- snaga	: 1,5 KW
- električni priključci	: 400V, 50Hz, IP55
- material tijela	: LIVENO ŽELJEZO
- material rezača/noževa	: Hrom molibden ETOS
- material osovina	: Legirani čelik kaljeni
- tip i dimenzije porta	: 6" NB BS4504 Prirubnice

8.1.7b Dvije (2) progresivno kavitacione (pužne) pumpe za mulj, za napajanje rezervoara za mulj, jedna rezervna, sa zaštitom od nadpritiska i zaštitom od rada na prazno

- proizvođač	: NOV PROCESS (MONO PUMPS)
- tip	: C14KC11RMA
- protok	: 6m3/h
- pritisak	: 6bar
- brzina	: 226 o/min
- snaga	: 3 KW
- električni priključci	: 400V, 50Hz, IP55
- tijelo usisne komore	: LIVENO ŽELJEZO-BS EN 1561-EN-GJL-HB195
- stator	: NBR

3/12/18

GEORGIOS KARKANIAS
PRESIDENT

- rotor	: LEGIRANI ČELIK - ASTM A322 - MARKA 4110
- osovina	: NERĐAJUĆI ČELIK - BS EN 10088-3 MARKA X2CrNi18-9, 1.4307

8.1.8 Dva (2) konvertera (invertera) frekvencije za pumpe za mulj

- proizvođač	: SIEMENS
- tip	: SINAMICS G 120C
- snaga	: 3KW

8.2 REZERVOAR ZA MULJ

8.2.1 Jedna (1) potapajuća mješalica sa uređajem za dizanje

- proizvođač mješalice	: WILO
- tip	: TR 21.145-4/11 S14
- prečnik propelera	: 210mm
- brzina propelera	: 1390 o/min
- nominalna snaga	: 1,3 KW
- električni ulaz (radna tačka)	: 1,2 KW
- maksimalni električni ulaz	: 1,74 KW
- elektrčni priključci	: 400V, 50Hz
- proizvođač uređaja za dizanje	: KARKANIAS SA

3/12/18

GEORGIOS KARKANIAS
P.E.N.

8.3 JEDINICA ZA MEHANIČKU DEHIDRACIJU MULJA

8.3.1 Dvije (2) progresivno kavitacione (pužne) pumpe za mulj, za napajanje dekantera, jedna rezervna, sa zaštitom od nadpritiska

- proizvođač	: NOV PROCESS (MONO PUMPS)
- tip	: C14KC11RMA
- protok	: 6m3/h
- pritisak	: 3bar
- brzina	: 219 o/min
- snaga	: 2,2 KW
- električni priključci	: 400V, 50Hz, IP55
- tijelo usisne komore	: LIVENO ŽELJEZO-BS EN 1561-EN-GJL-HB195
- stator	: NBR
- rotor	: LEGIRANI ČELIK - ASTM A322 - MARKA 4110
- osovina	: NERĐAJUĆI ČELIK - BS EN 10088-3 MARKA X2CrNi18-9, 1.4307

8.3.2 Dva (2) konvertera (invertera) frekvencije za pumpe za mulj

- proizvođač	: SIEMENS
- tip	: SINAMICS G 120C
- snaga	: 2,2KW

8.3.3 Jedan (1) elektromagnetno-induktivni mjerač protoka za stabilizirani/zgusnuti mulj

- proizvođač	: SIEMENS
- tip	: Sitrans F M MAG 5100 W (senzor)
	: Sitrans F M MAG 5000

Senzor protoka

Mjerač protoka za postrojenja za prečišćavanje vode i otpadnih voda za kompaktni ili separatni transmiter. Čvrsta NBR gumena obloga, integrisane elektrode za uzemljenje i mjerenje napravljene od Hastelloy C, veličina prirubnica u skladu sa EN 1092-1,ambijentalna temperatura -40 – +70 °C, temperatura sredine -10 – +70 °C, kućište prirubnice i mjerača protoka napravljeno je od bojenog čelika, priključna kutija sa uvodnicom M20, flash memorija za očuvanje kalibracije, verifikaciju podataka senzora, i očuvanje posebnih podešavanja klijenta, stepen zaštite IP 67, odobrenja PED-97/23EG, zamjenljivi dio kao rezervni,isporuka i montaža spremno-za-rad.

3/12/18

GEORGIOS KARKANIAS
PRESIDENT

Transmiter

Transmiter sa mikroprocesorskom regulacijom u kompaktnoj ili offset izvedbi u poliamidskom kućištu sa armaturom od staklenih vlakana, display sa pozadinskim osvjetljenjem, trolinijski, alfanumerički za protok, brojač za prednji, povratni ili neto protok, indikacija smjera protoka, sveobuhvatna samo-dijagnostika za signaliziranje i registrovanje greške. Sklop tastera sa display jedinicom, smanjenje obima curenja, mjerni princip sa konstantnim pulsiranjem polja, automatsko nulto podešavanje, flash memorija za automatsku registraciju podataka o kalibraciji i verifikaciju senzorskih podataka kao i posebna podešavanja klijenta, mjerna greška 0.4 %, istovremeno korišćenje analognog izlaza 0/4 – 20 mA, pulsnog izlaza, digitalnog ulaza i izlaza, relejnog izlaza 24 V DC/1 A, kao i električne izolacije ulaza i izlaza. Ambijentalna temperatura -20 - +60 °C, električno napajanje 24 V DC, stepen zaštite IP 67, isporuka i montaža spremno-za-rad.

8.3.4 Jedna (1) centrifuga (decanter) za dehidraciju mulja

- proizvođač : ALFA LAVAL
- tip : ALDEC 45 VDF
- protok : 5m3/h
- čvrste materije / opterećenje : 125kgSS/h
- čvrste materije dehidriranog mulja : 23%

Posuda

Prečnikr 360 mm

Dužina 1512 mm

Maksimalna brzina 4.200 o/min

G-sila pri radnoj brzini 3.549 g

Materijal – školjka posude AISI 316

Materijal - glavčina Duplex SS

Materijal – vijci AISI 316

Ugao 20°

Zaštita od habanja

Zaštita pri transportu čvrstih materija, cilindrični i konusni dio: Rebra od AISI 316

Ispuštanje čvrstih materija: Tungsten karbid

Okvir i kućište

Tip okvira-kućišta: Profil kutijastog nosača sa integralnim kućištem

Materijal – okvir: Boja niskougljeničnog čelika srednje plava NCS 3560 R75B

Materijal kućišta: SS AISI 316

Zaštita od habanja: Obloge za zaštitu od habanja od AISI 304 na ispusnom dijelu/izljevu

3/12/18

GEORGIOS KARKANIAS
PRESIDENT

Glavni motor

Tip ABB, VFD 15 kW, 3x380V, 50 Hz, IP55 tip

Stražnji pogon

Tip ABB, VFD 5.5 kW, 3x380V, 50 Hz, IP55 tip

Mjenjačka kutija

Tip Planetary 2 stepena

Odnos 1: 159

Maksimalni torzioni momenat 2,5 kNm

Maksimalna diferencijalna brzina i torzioni moment 44 o/min pri 2,5 kNm

Regulacija diferencijalne brzine transportera pomoću invertera

Komandna tabla

8.3.5 Jedan (1) automatski uređaj za pripremu polielektrolita

- proizvođač	: KARKANIAS SA
- tip	: TAP 3000K
- kapacitet	: max3000lt/h
- ukupni kapacitet tri komore	: 3*1000lt
- kapacitet ljevkastog koša za prah	: 50 lt
- materijal	: AISI 304
- koncentracija flokulanta	: 0,05 – 0,5%

Diziranje praha sa promjenljivom brzinom pomoću invertera

Tri (3) propelera

- materijal	: AISI 304

Zupčasti motor 1. propelera

- proizvođač	: BONFIGLIOLI
- tip (motor / zupčasti)	: BN 100LB / S401 F_1.9
- brzina propelera	: 350rpm
- snaga	: 1,1KW

Zupčasti motor 2. propelera

- proizvođač	: BONFIGLIOLI
- tip (motor / zupčasti)	: P71 BN71B4 / VF44_7
- brzina propelera	: 196 o/min
- snaga	: 0,37KW

3/12/18

GEORGIOS KARKANIAS
[illegible]ENT

Zupčasti motor 3. propelera

- proizvođač	: BONFIGLIOLI
- tip (motor / zupčastir)	: P71 BN71B4 / VF44_14
- brzina propelera	: 98 o/min
- snaga	: 0,37KW
- električni priključci	: 400V, 50Hz

Jedan regulator pritiska, jedan električni ventil, jedan loptasti ventil, jedan mjerač protoka, jedan manometar

Prekidači sa tri nivoa

Komandna tabla

8.3.6 Dvije (2) progresivne (kavitacione) pumpe za doziranje polielektrolita, jedna rezervna, sa zaštitom od nadpritiska

- proizvođač	: NOV PROCESS (MONO PUMPS)
- tip	: C22AC51EMA
- protok	: 650lt/h
- pritisak	: 3bar
- brzina	: 421 o/min
- snaga	: 0,75 KW
- električni priključci	: 400V, 50Hz, IP55
- tijelo usisne komore	: LIVENO GVOŽĐE-BS EN 1561-EN-GJL-HB195
- stator	: NBR
- rotor	: NERĐAJUĆI ČELIK - BS EN 10088-3 MARKA X2CrNiMo17-12-2, 1.4404
- osovina	: NERĐAJUĆI ČELIK- BS EN 10088-3 MARKA X2CrNiMo17-12-2, 1.4404

8.3.7 Dva (2) konvertera (invertera) frekvencije za pumpe za doziranje polielektrolita

- proizvođač	: SIEMENS
- tip	: SINAMICS G 120C
- snaga	: 0,75KW

3/12/18

GEORGIOS KARKANIAS
PRESIDENT

8.3.8 Jedan (1) elektromagnetno-induktivni mjerač protoka za rastvor polielektrolita

- proizvođač	: SIEMENS
- tip	: Sitrans F M MAG 5100 W (sensor)
	: Sitrans F M MAG 5000

Senzor protoka

Mjerač protoka za postrojenja za prečišćavanje vode i otpadnih voda za kompaktni ili separatni transmiter. Čvrsta NBR gumena obloga, integrisane elektrode za uzemljenje i mjerenje napravljene od Hastelloy C, veličina prirubnica u skladu sa EN 1092-1,ambijentalna temperatura -40 – +70 °C, temperatura sredine -10 – +70 °C, kućište prirubnice i mjerača protoka napravljeno je od bojenog čelika, priključna kutija sa uvodnicom M20, flash memorija za očuvanje kalibracije, verifikaciju podataka senzora, i očuvanje posebnih podešavanja klijenta, stepen zaštite IP 67, odobrenja PED-97/23EG, zamjenljivi dio kao rezervni,isporuka i montaža spremno-za-rad.

Transmitter

Transmiter sa mikroprocesorskom regulacijom u kompaktnoj ili offset izvedbi u poliamidskom kućištu sa armaturom od staklenih vlakana, display sa pozadinskim osvjetljenjem, trolinijski, alfanumerički za protok, brojač za prednji, povratni ili neto protok, indikacija smjera protoka, sveobuhvatna samo-dijagnostika za signaliziranje i registrovanje greške. Sklop tastera sa display jedinicom, smanjenje obima curenja, mjerni princip sa konstantnim pulsiranjem polja, automatsko nulto podešavanje, flash memorija za automatsku registraciju podataka o kalibraciji i verifikaciju senzorskih podataka kao i posebna podešavanja klijenta, mjerna greška 0.4 %, istovremeno korišćenje analognog izlaza 0/4 – 20 mA, pulsnog izlaza, digitalnog ulaza i izlaza, relejnog izlaza 24 V DC/1 A, kao i električne izolacije ulaza i izlaza. Ambijentalna temperatura -20 - +60 °C, električno napajanje 24 V DC, stepen zaštite IP 67, isporuka i montaža spremno-za-rad.

8.3.9 Jedan (1) pužasti transporter za dehidrirani mulj

- proizvođač	: KARKANIAS SA
- tip	: SC
- snaga	: 1,5KW
- električni priključci	: 400V, 50Hz
- materijal korita	: AISI304
- material puža	: S355

8.3.10 Dva (2) spemnika za dehidrirani mulj

- proizvođač	: VAN
- tip	: NM-5V
- kapacitet	: 5m3
- dimenzije (Š x D x Dub.)	: 1700 x 3000 x 1250mm

3/12/18

GEORGIOS KARKANIAS
PRESIDENT

8.3.11 Jedno (1) postolje spremnika za mulj sa električnim pogonom

- proizvođač : KARKANIAS SA
- utovarni kapacitet : 9tn

8.3.12 Jedan (1) ventilator za objekat za dehidraciju mulja

- proizvođać : Soler & Palau (S&P)
- tip : HCFT/4-400/H
- protok : 5070 m3/hr
- brzina : 1350 o/min
- snaga : 300W
- električni priključci : 400V, 50Hz

8.3.13 Jedan (1) uređaj za dizanje (mosna dizalica) za opremu za dehidraciju

- proizvođač : KARKANIAS SA
- kapacitet dizanja : 1600kg

3/12/18

GEORGIOS KARKANIAS
PRESIDENT

9. JEDINICA ZA SERVISNU VODU

9.1 Jedna (1) stanica za automatski pritisak sa dvije (jedna rezervna) centrifugalne pumpe za servisnu vodu

- proizvođač	: EBARA
- tip	: EVMSG15 6N5
- protok	: 21m3/h
- pritisak	: 6bar
- brzina	: 2900 o/min
- snaga	: 5,5KW
- električni prtikljućci	: 400V, 50Hz
- material (tijelo/impeleri/osovina)	: AISI304/AISI304/AISI316

Konverteri (inverteri) frekvencije, 2 stavke

- proizvođač	: DAB
- tip	: MCE/P55
- snaga	: 5,5KW

Sudovi pod pritiskom, 2 stavke

- kapacitet	: 18lt

Analogni transmiteri pritiska

Komandna tabla

3/12/18
GEORGIOS KARKANIAS
PRESIDENT

10. TRAFOSTANICA, RAZVODNE TABLE, REZERVNO ELEKTRIČNO NAPAJANJE

10.1 Razvodna tabla srednjeg napona

- Omotač, proizvođač i montaža	: GERO S.A.
- Ulazna jedinica	: ABB, DRC_500
	Sa mjerenjem i sabirničkim uzemljenjem
- Rastavne sklopke	: ABB, SFC_500

10.2 Transformator

- Proizvođač	: ABB
- Nominalna snaga	: 500 kVA
- Primarni napon	: 10 kV
- Sekundarni napon	: 400 V
- Frekvencija	: 50 Hz
- Težina ulja	: 340 Kg
- Hlađenje	: ONAN

Standardni pribor

Bucholz relej CH/O

Regulaciona preklopka u beznaponskom stanju na primarnom namotaju

Točkovi

Dehidracijski odzračivač

Termometar sa 2 kontaktora

Magnetski indikator nivoa ulja w/o (bez) kontaktora

Stezaljke za niskonaponske uvodnice/Flags

10.3 Niskonaponska glavna distributivna razvodna tabla

- Proizvođač	: GERO S.A.
-Proizvođač komutacionog uređaja	: ABB

10.4 Dvije (2) distributivne table (PDC)

- Proizvođač	: GERO S.A.
- Proizvođač komutacionog uređaja	: ABB
- Ugradnja PDC 1	: U objektu sa uređajima za produvavanje
- Ugradnja PDC 2	: U objektu za dehidraciju

3/12/18

GEORGIOS KARKANIAS
PRESIDENT

10.5 Jedinica za rezervno električno napajanje

- Proizvođač	: KAPELOS DIESELS S.A.
- Tip	: 210 kVA rezervna na prikolici
Motor	
- Proizvođač	: John Deere
- Broj cilindara	: 6
- Pomjeranje	: 6800 cm^3
- Rezervni izlaz, u skladu sa ISO3046	: 245 HP (183KW) pri 1500 O/MIN
Alternator	
- Proizvođač	: Marelli
- Trajni izlaz / snaga	: 185 KVA, 400V, 50Hz
- Rezervni izlaz / snaga	: 205 KVA, 400V, 50Hz

Rezervoar za gorivo: 220 l ugrađen u šasiji, 2000 l u stacionarnom spremniku

Automatska komandna tabla za rezervnu upotrebu

- Komandna tabla je napravljena od lima premazanog epoxy bojom, sa prednjim vratima koja omogućavaju jednostavnu provjeru i otklanjanje kvara.
- Automatski regulator kvara u električnom sistemu napajanja
- The D500L je sljedeća generacija genset komandnih uređaja koji kombinuju multifunkcionalnost i široke komunikacijske mogućnosti zajedno sa izvedbom koju odlikuje pouzdanost i niska cijena.
- Uređaj je usklađen i uveliko nadmašuje najstrožije svjetske standarde u industrijskoj kategoriji u pogledu bezbjednosti, EMC, vibracije i zaštite okoline.
- U software karakteristike ubraja se i jednostavan postupak nadogradnje firmware-a preko USB porta.
- Windows bazirani PC software omogućava monitoring i programiranje preko USB-a, serijsko i GPRS.
- PC bazirani Rainbow Scada software omogućava monitoring i kontrolu neograničenog broja genset-ova sa jedne centralne lokacije.

Nadstrešnica

Nadstrešnica je projektovana i izgrađena tako da obezbjeđuje savršeno hlađenje motora, čak i u tropskim uslovima primjene, nivo buke je 67 dBA ±3 na 7 m.

Prikolica

Kompletan genset (generator set) je jpremljen prikolicom, uključujući i mehaničku disk kočnicu, auto-reverzibilnu. Direkciona stabilnost i spiralna opruga jednostavna za održavanje.

3/12/18
GEORGIOS KARKANIAS
PRESIDENT

11. SISTEM AUTOMATIZACIJE & SCADA

11.1 PLC 01 u objektu sa uređajima za produvavanje

- proizvođač	: Siemens
- Tip	: Simatic S7-1500
- CPU	: 1515-2PN
- Radna memorija za program	: 500 kB
- Radna memorija za podatke	: 3 MB
- Ukupan broj digitalnih ulaza	: 160
- Ukupan broj digitalnih izlaza	: 64 (24 VDC/0,5A)
- Ukupan broj analognih ulaza	: 24
- Ukupan broj analognih izlaza	: 12

11.2 Touch ploča 01 u objektu sa uređajima za produvavanje

- Proizvođač	: Siemens
- Tip	: Simatic TP1200 Comfort
- Veličina ekrana	: 12" – 16 mil u boji
- Memorija	: 12 MB

11.3 PLC 02 u objektu za dehidraciju mulja

- Proizvođač	: Siemens
- Tip	: Simatic S7-1500
- CPU	: 1515-2PN
- Radna memorija za program	: 500 kB
- Radna memorija za podatke	: 3 MB
- Ukupan broj digitalnih ulaza	: 224
- Ukupan broj digitalnih izlaza	: 96 (24 VDC/0,5A)
- Ukupan broj analognih izlaza	: 24
- Ukupan broj analognih ulaza	: 16

3/12/18

GEORGIOS KARKANIAS
PRESIDENT

11.4 Touch ploča 02 u objektu za dehidraciju mulja

- Proizvođač	: Siemens
- Tip	: Simatic TP1200 Comfort
- Veličina ekrana	: 12" – 16 mil Colors
- Memorija	: 12 MB

11.5 SCADA

- Proizvođač : Siemens

Za svaki (od dva redundantna) servera

WINCC SYSTEMSOFTWARE V7.4, RT 2048 (2048 POWER TAGS),
WINCC/SERVER V7.4, OPTION F. WiNCC V7.4, RUNTIME-SW

Za svaku (od dvije) korisničke stanice

WINCC/REDUNDANCY V7.4, OPTION F. WINCC V7.4, RUNTIME-SW

Z Za svaku (od dvije) korisničke stanicea

WINCC SYSTEMSOFTWARE V7.4, RT 128 (128 POWER TAGS), RUNTIME-SW

11.6 Serveri, 2 komada

- Proizvođač	: HP
- Model	: Radna stanica Z240 SFF
- Procesor	: Intel Core i7 6700 3,4,GHz (Quad Core)
- RAM	: 8 GB DDR4 SDRAM
- Cache memorija	: 8 MB
- Hard drive	: 1 TB – SATA 6 Gb/s
- Regulator grafike	: Intel HD Graphics 530
- Monitori	: LG Monitor 25UM58-P (25")

3/12/18

GEORGIOS KARKANIAS
PRESIDENT

11.7 Korisničke stanice, 2 komada

- Proizvođač	: HP
- Model	: Radna stanica Z240 MT
- Procesor	: Intel Core i5 6600 3,3,GHz (Quad Core)
- RAM	: 8 GB DDR4 SDRAM
- Cache memorija	: 6 MB
- Hard drive	: 1 TB – SATA 6 Gb/s
- Regulator grafike	: Intel HD Graphics 530
- Monitori	: LG Monitor 25UM58-P (25")

11.8 Štampač A4

- Proizvođač	: Samsung
- Model	: MFP Laser Color SL-C480 N

11.9 Štampač A3+

- Proizvođač	: Epson
- Model	: L1300

11.10 UPS

- Proizvođač	: Delta Electronics
- Model	: Amblon

3/12/18

GEORGIOS KARKANIAS
PRESIDENT

12. LABORATORIJSKA OPREMA

12.1 Jedan (1) spektrometar za mjerenje COD, NH4-N, NO3-N, TN, TP

- proizvođač : HACH
- model : DR 3900

12.2 Jedan (1) suvi (dry) termostat

- proizvođač : HACH
- model : LT 200

12.3 Jedan (1) BOD respirometrički aparat

- proizvođač : VELP SCIENTIFICA
- model : BOD sensor system 6

12.4 Jedan (1) rashladni inkubator

- proizvođač : VELP SCIENTIFICA
- model : FTC 120

12.5 Jedna (1) mjerna oprema za suspendovane čvrste materije

12.5.1 Pećnica za sušenje

- proizvođač : AUXILAB/ NAHITA BLUE
- model : Series 631 Plus / JBD001
- karakteristike : 30L

12.5.2 Analitička vaga

- proizvođač : AUXILAB/ NAHITA BLUE
- model : 5134 EX / KBF003
- karakteristike : 220g/0.1mg

12.5.3 Filtracioni system koji se sastoji od sljedećih dijelova:

Boca za filtriranje

- proizvođač : AUXILAB/ NAHITA BLUE
- model : PJH003 (12418311)
- karakteristike : 1000 mL

3/12/18

GEORGIOS KARKANIAS
PRESIDENT

Set od 7 adaptera f/filtera

- proizvođač : AUXILAB/ NAHITA BLUE
- model : PNJ002 (45000420)
- karakteristike : Neopren

Vodena jet pumpa f/vakum

- proizvođač : AUXILAB/ NAHITA BLUE
- model : PXL004 (45001395)

Büchner-ov lijevak

- proizvođač : AUXILAB/ NAHITA BLUE
- model : PNF002 (20237050)
- karakteristike : Øint 50mm

Gooch-ov lončić

- proizvođač : AUXILAB/ NAHITA BLUE
- model : PLB001 (20232320)

Stakleno vlakno za filtere

- proizvođač : AUXILAB/ NAHITA BLUE
- model : PSP028 (84011047)
- karakteristike : 47 mm, b/100

12.5.4 Eksikatori sa poklopcem (stopcock lid desiccators)

- proizvođač : AUXILAB/ NAHITA BLUE
- model : BDB005 (10264300)
- karakteristike : 300mm

12.6 Dva (2) Imhoff-ova konusa

12.7 Devet (3+3+3) mjernih cilindara

- kapacitet : 100/250/500ml

12.8 Devet (3+3+3) graduiranih pipeta

- kapacitet : 1/5/10ml

12.9 Jedan (1) frižider

- kapacitet : 250lt

3/12/18

GEORGIOS KARKANIAS
DIRECTOR

3/12/18

Proposed Facilities List
Predložena lista objekata

KARKANIAS
ENVIRONMENTAL TECHNOLOGY S.A.

A/A	Facility Objekat	Item Stavka	Size Veličina
1	Inlet and Overflow Manhole Ulivna i prelivna šahta	Surface Površina	56,10 m^2
		Depth Dubina	5,99 m
2	Septage Unit Septik	Surface Površina	8,40 m^2
		Volume Zapremina	24,36 m^3
3	Pumping Station Pumpna stanica	Length Dužina	11,75 m
		Width Širina	4,45 m
		Depth Dubina	8,34 m
4	Mechanical Wastewater Pretreatment Unit Uređaj za mehanički predtretman otpadnih voda	Length Dužina	7,00 m
		Width Širina	1,80 m
5	Flow Distribution Chamber I Komora I za distribuciju protoka	Surface Površina	28,27 m^2
		Volume Zapremina	112,81 m^3
6	Predenitrification Tank Bazen za pre-denitrifikaciju	Surface Površina	72,60 m^2
		Volume Zapremina	363,00 m^3
7	Circulating Activated Sludge Tank Cirkulacioni bazen za aktivni mulj	Surface Površina	266,80 m^2
		Volume Zapremina	1.334,00 m^3
8	Flow Distribution Chamber II Komora II za distribuciju protoka	Surface Površina	28,27 m^2
		Volume Zapremina	113,66 m^3
9	Final Setling Tank Bazen za finalno taloženje	Surface Površina	153,94 m^2
		Volume Zapremina	619,14 m^3
10	Return Activated Sludge and Excess Suldge Pumping Station Pumpna stanica za povratni aktivni mulj i višak mulja	Surface Površina	18,55 m^2
		Volume Zapremina	79,77 m^3
11	Chemical Phosphorus Precipiation Hemijska fosforna precipitacija	Length Dužina	5,10 m
		Width Širina	2,80 m
		Surface Površina	14,28 m^2
12	Filtration Unit Jedinica za filtraciju	Length Dužina	5,80 m
		Width Širina	3,85 m
		Depth Dubina	0,78 m
13	UV Disinfection Unit - Effluent UV dezinfekciona jedinica - izlazna voda (efluent)	Length Dužina	5,00 m
		Width Širina	2,25 m
		Depth Dubina	1,33 m

KARKANIAS ENVIRONMENTAL TECHNOLOGY S.A.
INDUSTRIAL AREA OF LARISA - GREECE
POSTAL CODE 41004, BOX 3053
TEL.: +30 2410 541386 - FAX: +30 2410 541354
Email: info@karkanias.gr
TAX NUMBER: 099244711
REGISTRATION NUMBER: 48779/31/B/01/12

3/12/18

GEORGIOS KARKANIAS
PRESIDENT

A/A	Facility Objekat	Item Stavka	Size Veličina
14	Flow Measurement Channel Kanal za mjerenje protoka	Length Dužina	7,05 m
		Width Širina	0,50 m
		Depth Dubina	0,29 m
15	Sludge Aerobic Stabilisation and Technical Tank Bazen za aerobnu stabilizaciju mulja i ugušćivanje	Surface Površina	314,16 m^2
		Volume Zapremina	1.413,72 m^3
16	Sludge Holding Tank Bazen za mulj	Surface Površina	78,54 m^2
		Volume Zapremina	3,10 m^3
17	Sludge Mechanical Dewatering Unit Objekat za mehaničku dehidrataciju mulja	Length Dužina	19,40 m
		Width Širina	6,00 m
		Surface Površina	116,40 m^2
18	Service Water Unit (tank) Servisni rezervoar za vodu	Surface Površina	2,25 m^2
		Volume Zapremina	5,63 m^3
19	Service Water Unit (Room) Jedinica za servisnu vodu (soba)	Length Dužina	5,10 m
		Width Širina	2,05 m
		Surface Površina	10,46 m^2
20	Operating Building Upravna zgrada	Length Dužina	10,35 m
		Width Širina	15,90 m
		Surface Površina	164,57 m^2
21	Blower House Objekat za produvavanje	Length Dužina	14,10 m
		Width Širina	4,50 m
		Surface Površina	63,45 m^2
22	Transformer Station Building Trafostanica	Length Dužina	7,90 m
		Width Širina	3,40 m
		Surface Površina	26,86 m^2
23	Septage Unit Building Septik zgrada	Length Dužina	4,75 m
		Width Širina	4,50 m
		Surface Površina	21,38 m^2
24	Road Surface Površina puta	Surface Površina	1.690,76 m^2
25	Fence Ograda	Length Dužina	417,00 m

3/12/18

GEORGIOS KARKANIAS
PRESIDENT

Danilovgrad Municipal Infrastructure Project
Construction of Wastewater Plant
Danilovgradski opštinski Infrastrukturni projekat
Izgradnja postrojenja za prečišćavanje otpadnih voda

KARKANIAS
ENVIRONMENTAL TECHNOLOGY S.A.

Technical Tender (Updated)
Tehnička Ponuda

Process Design

KARKANIAS ENVIRONMENTAL TECHNOLOGY S.A.
INDUSTRIAL AREA OF LARISA - GREECE
POSTAL CODE 41004, BOX 3063
TEL.: +30 2410 541386 - FAX: +30 2410 541354
Email: info@karkanias.gr
TAX NUMBER: 095244711
REGISTRATION NUMBER: 48779/31/B/01/12

GEORGIOS KARKANIAS
PRESIDENT

KARKANIAS ENVIRONMENTAL TECHNOLOGY S.A.
INDUSTRIAL AREA OF LARISA - GREECE
POSTAL CODE 41004, BOX 3063
TEL.: +30 2410 541386 - FAX: +30 2410 541354
Email: info@karkanias.gr
TAX NUMBER: 095244711
REGISTRATION NUMBER: 48779/31/B/01/12

3/12/18

GEORGIOS KARKANIAS
PRESIDENT

Design Data
Podaci iz projekta

		1st STAGE 1. FAZA	1st STAGE 1. FAZA	2st STAGE 2. FAZA	2st STAGE 2. FAZA	Start up Početak	Start up Početak
Population equivalent **Ekvivalent populacije**		6000 PE Summer Ljeto	6000 Winter Zima	12000 Summer Ljeto	12000 Winter Zima	3900 Summer Ljeto	3900 Winter Zima
Hydraulic loads **Hidraulično opterećenje**							
Average Dry Weather Daily Flow **Srednji dnevni protok po suvom vremenu**	**QADF**	**898,60 m3/d**	**898,60**	**1797,20**	**1797,20**	**584,1**	**584,1**
		37,4 m3/hr	37,4	74,9	74,9	24,3	24,3
		10,4 l/s	10,4	20,8	20,8	6,8	6,8
Maximum Dry Weather Daily Flow **Maksimalni dnevni protok po suvom vremenu**	**QMDF**	**1261,40 m3/d**	**1261,40**	**2522,80**	**2522,80**	**819,9**	**819,9**
		52,6 m3/hr	52,6	105,1	105,1	34,2	34,2
		14,6 l/s	14,6	29,2	29,2	9,5	9,5
Maximum Dry Weather Hourly Flow **Maksimalni protok po suvom vremenu po satu**	**QMHF**	**78,80 m3/hr**	**78,80**	**157,60**	**157,60**	**51,2**	**51,2**
		21,9 l/s	21,9	43,8	43,8	14,2	14,2
Wet Weather Flow **Protok po vlažnom vremenu**	**QWWF**	**94,60 m3/hr**	**94,60**	**189,20**	**189,20**	**94,60**	**94,60**
		26,3 l/s	26,3	52,6	52,6	26,3	26,3
Maximum Wet Weather Daily Flow **Maksimalni dnevni protok po vlažnom vremenu**	**Qmax**	**2270,40 m3/d**	**2270,40**	**4540,80**	**4540,80**	**2270,40**	**2270,40**
		94,60 m3/hr	94,60	189,20	189,20	94,60	94,60
Pollutant loads **Opterećenje zagađenja**							
BOD5 inlet							
BOD5 uliv	BOD5i	360,00 Kg/d	360,00	720,00	720,00	234,00	234,00
for QMHF za QMHF		400,6 mg/l	400,6	400,6	400,6	400,6	400,6
BOD5 design inlet							
OD5 projektovani uliv	**BOD5imax**	**360,00 Kg/d**	**360,00**	**720,00**	**720,00**	**234,00**	**234,00**
		400,6 mg/l	**400,6**	**400,6**	**400,6**	**400,6**	**400,6**
BOD5 outlet							
BOD5 ispust	BOD5e	25,0 mg/l	25,0	25,0	25,0	25,0	25,0
		22,47 Kg/d	22,47	44,93	44,93	14,60	14,60
COD5 inlet							
COD5 uliv	CODi	720,00 Kg/d	720,00	1440,00	1440,00	468,00	468,00
for QMHF za QMHF		801,2 mg/l	801,2	801,2	801,2	801,2	801,2
COD5 design inlet							
COD5 projektovani uliv	**CODimax**	**720,00 Kg/d**	**720,00**	**1440,00**	**1440,00**	**468,00**	**468,00**
		801,2 mg/l	**801,2**	**801,2**	**801,2**	**801,2**	**801,2**
COD5 outlet							
COD5 ispust	CODe	125,0 mg/l	125,0	125,0	125,0	125,0	125,0
		112,33 Kg/d	112,33	224,65	224,65	73,01	73,01

3/12/18

GEORGIOS KARANIAS
PRESIDENT

SS inlet							
SS uliv	Ssi	420,00 Kg/d	420,00	840,00	840,00	273,00	273,00
	for QMHF						
	za QMHF	467,4 mg/l	467,4	467,4	467,4	467,4	467,4
SS design inlet							
SS projektovani uliv	**SSimax**	**420,00 Kg/d**	**420,00**	**840,00**	**840,00**	**273,00**	**273,00**
		467,4 mg/l	**467,4**	**467,4**	**467,4**	**467,4**	**467,4**
SS secondary treatment outlet							
SS ispust sekundarnog tretmana	SSbe	25,0 mg/l	25,0	25,0	25,0	25,0	25,0
		22,47 Kg/d	22,47	44,93	44,93	14,60	14,60
SS outlet							
SS ispust	SSe	10,0 mg/l	10,0	10,0	10,0	10,0	10,0
		8,99 Kg/d	8,99	17,97	17,97	5,84	5,84
TN inlet							
TN uliv	TNi	66,00 Kg/d	66,00	132,00	132,00	42,90	42,90
	for QMHF						
	za QMHF	73,4 mg/l	73,4	73,4	73,4	73,4	73,4
TN design inlet							
TN projektovani uliv	**TNimax**	**66,00 Kg/d**	**66,00**	**132,00**	**132,00**	**42,90**	**42,90**
		73,4 mg/l	**73,4**	**73,4**	**73,4**	**73,4**	**73,4**
N_NH4 outlet							
N_NH4 ispust	N_NH4e	2,0 mg/l	2,0	2,0	2,0	2,0	2,0
		1,80 Kg/d	1,80	3,59	3,59	1,17	1,17
N_NO3 outlet							
N_NO3 ispust	N_NO3e	11,0 mg/l	11,0	11,0	11,0	11,0	11,0
		9,88 Kg/d	9,88	19,77	19,77	6,43	6,43
Organic nitrogen outlet							
Organski nitrogenski ispust	Norge	2,0 mg/l	2,0	2,0	2,0	2,0	2,0
		1,80 Kg/d	1,80	3,59	3,59	1,17	1,17
TN outlet							
TN ispust	TNe	15,00 mg/l	15,00	15,00	15,00	15,00	15,00
		13,48 Kg/d	13,48	26,96	26,96	8,76	8,76
P inlet							
P uliv	Pi	10,80 Kg/d	10,80	21,60	21,60	7,02	7,02
	for QMHF						
	za QMHF	12,0 mg/l	12,0	12,0	12,0	12,0	12,0
P design inlet							
P projektovani uliv	**Pimax**	**10,80 Kg/d**	**10,80**	**21,60**	**21,60**	**7,02**	**7,02**
		12,0 mg/l	**12,0**	**12,0**	**12,0**	**12,0**	**12,0**
P outlet							
P ispust	Pe	2,0 mg/l	2,0	2,0	2,0	2,0	2,0
		1,80 Kg/d	1,80	3,59	3,59	1,17	1,17

3/12/18

GEORGIOS MAKANTAS
PRESIDENT

Septage Unit
Septik

Automatic cleaned fine screen, drum with screenings screw
Fino sito sa automatskim čišćenjem, doboš sa pužem za krupni otpad

Septage tank
Rezervoar za sakupljanje kanalizacionog otpada

Dimensions :
Dimenzije:

Liquid height Visina tečnosti	HΔB	2,90 m
Length Dužina	LΔB	4,00 m
Width Širina	WΔB	3,00 m
Effective tank volume Efektivna zapremina rezervoara	VΔB	34,80 m3

3/12/18
GEORGIOS KARAMITAS
PRESIDENT

Inlet Pumping Station
Ulivna pumpna stanica

		1st STAGE 1. FAZA 6000 PE Summer Ljeto	1st STAGE 1. FAZA 6000 Winter Zima	2st STAGE 2. FAZA 12000 Summer Ljeto	2st STAGE 2. FAZA 12000 Winter Zima	Start up Početak 3900 Summer Ljeto	Start up Početak 3900 Winter Zima
Pumping station volume Zapremina pumpne stanice							
Vps=(0,9*n*Qp)/nps Pumping station effective volume Efektivna zapremina pumpne stanice	Vps						
Pumps number (in operation) Broj pumpi (u upotrebi)	n	2	2	4	4	2	2
Pump flow Protok pumpe	Qp	14,28 l/sec	14,28	14,28	14,28	14,28	14,28
Max number of pump starts Maksimalni broj pokretanja pumpi	nps	8	8	8	8	8	8
Minimum pumping station effective volume Minimalna efektivna zapremina pumpne stanice	Vps	3,21 m3	3,21	6,43	6,43	3,21	3,21

3/12/18

GEORGIOS KARKANIAS
PRESIDENT

Predenitrification tank
Rezervoar za predenitrifikaciju

		1st STAGE 1. FAZA 6000 PE Summer Ljeto	1st STAGE 1. FAZA 6000 Winter Zima	2st STAGE 2. FAZA 12000 Summer Ljeto	2st STAGE 2. FAZA 12000 Winter Zima	Start up Početak 3900 Summer Ljeto	Start up Početak 3900 Winter Zima
Average Dry Weather Daily Flow Srednji dnevni protok po suvom vremenu	QADF	898,60 m3/d 37,4 m3/h	898,60 37,4	1797,20 74,9	1797,20 74,9	584,10 24,3	584,10 24,3
Maximum Wet Weather Daily Flow Maksimalni dnevni protok po vlažnom vremenu	Qmax	2270,40 m3/d 94,60 m3/h	2270,40 94,60	4540,80 189,20	4540,80 189,20	2270,40 94,60	2270,40 94,60
Sludge Recirculation Flow (100%Qmax) Protok recirkulacije mulja	Qr	94,60 m3/h	94,60	189,20	189,20	94,60	94,60
Wet Weather Flow Protok po vlažnom vremenu	QWWF	94,6 m3/h	94,6	189,2	189,2	94,6	94,6
Min retention time for flow Q'=Qmax+Qr minimalno vrijeme zadrzavanja za protok	t	1,90 hr 114,0 min	1,90 114,0	1,90 114,0	1,90 114,0	1,90 114,0	1,90 114,0
Demanded tank volume, (t*Q') Zahtijevana zapremina rezervoara	Vd	359,48 m3	359,48	718,96	718,96	359,48	359,48
Number of tanks Broj rezervoara	η1	1	1	2	2	1	1
Number of tanks in operation Broj rezervoara u upotrebi	η2	1	1	2	2	1	1
Tank dimensions: **Dimenzije rezervoara:**							
Liquid height Visina tečnosti	H	5,00 m	5,00	5,00	5,00	5,00	5,00
Length Dužina	L	13,20 m	13,20	13,20	13,20	13,20	13,20
Width Širina	W	5,50 m	5,50	5,50	5,50	5,50	5,50
Effective tank volume Efektivna zapremina rezervoara	Vd	363,00 m3	363,00	363,00	363,00	363,00	363,00
Total effective tanks volume Ukupna efektivna zapremina rezervoara	Vd,tot	363,00 m3	363,00	726,00	726,00	363,00	363,00
Retention time for QADF+Qr Vrijeme zadržavanja za QADF+Qr		164,95 min	164,95	164,95	164,95	183,12	183,12
Retention time for Qmax+Qr Vrijeme zadržavanja za Qmax+Qr		115,12 min	115,12	115,12	115,12	115,12	115,12
Retention time for QWWF+Qr Vrijeme zadržavanja za QWWF+Qr		115,12 min	115,12	115,12	115,12	115,12	115,12

3/12/18

GEORGIOS KARKANIAS
PRESIDENT

Circulating activated sludge tank
Cirkulacioni rezervoar za aktivni mulj

		1st STAGE 1. FAZA 6000 PE Summer Ljeto	1st STAGE 1. FAZA 6000 Winter Zima	2st STAGE 2. FAZA 12000 Summer Ljeto	2st STAGE 2. FAZA 12000 Winter Zima	Start up Početak 3900 Summer Ljeto	Start up Početak 3900 Winter Zima
Average Dry Weather Daily Flow Srednji dnevni protok po suvom vremenu	QADF	898,60 m3/d	898,60	1797,20	1797,20	584,10	584,10
Maximum Wet Weather Daily Flow Maksimalni dnevni protok po vlažnom vremenu	Qmax	2270,40 m3/d	2270,40	4540,80	4540,80	2270,40	2270,40
BOD5 inlet BOD5 ulaz	BOD5i	360,00 Kg/d 400,6 mg/l	360,00 400,6	720,00 400,6	720,00 400,6	234,00 400,6	234,00 400,6
BOD5 outlet BOD5 ispust	BOD5e	25,00 mg/l	25,00	25,00	25,00	25,00	25,00
SS outlet SS ispust	SSe	25,00 mg/l	25,00	25,00	25,00	25,00	25,00
Percentage of volatile solids Procenat promjenjivih čvrstih supstanci		0,70	0,70	0,70	0,70	0,70	0,70
Volatile solids outlet Ispust promjenjivih čvrstih supstanci	VSSe	17,50 mg/l	17,50	17,50	17,50	17,50	17,50
BODL volatile solids, VSSe(mg/l) * (grBODL/grVSS) BODL promjenjive čvrste supstance	BODLvsse	1,42 gr/gr VSS 24,85 mg/l	1,42 24,85	1,42 24,85	1,42 24,85	1,42 24,85	1,42 24,85
BOD5 volatile solids (BOD5vsse = 0,68 * BODLvsse) BOD5 promjenjive čvrste supstance	BOD5vsse	16,90 mg/l	16,90	16,90	16,90	16,90	16,90
Soluble BOD5 outlet (BOD5e - BOD5vsse) Otopljiv ispust BOD5		8,10 mgBOD5/l	8,10	8,10	8,10	8,10	8,10
moved BOD5 (BOD5i- soluble BOD5e) Uklonjeni BOD5 (BOD5i- otopljiv BOD5e)		392,52 mg/l 352,72 Kg/d	392,52 705,44	392,52 705,44	392,52 229,27	392,51 229,27	392,51 229,27
Wastewater temperature Temperatura otpadnih voda	T	22,00 °C	8,00	22,00	8,00	22,00	8,00
Specific growth rate of nitrifying bacteria, [μN = μN'*N/(KN + N)] Specifična brzina rasta nitrifikovanih bakterija	μN	0,54 d-1	0,18	0,54	0,18	0,54	0,18
Outlet concentration N-NH4+ Koncentracija ispusta	N	2,00 mg/l	2,00	2,00	2,00	2,00	2,00
Max value of μN, μN' =0,4 exp[0,098(T-15)] Maksimalna vrijednost μN	μN'	0,79 d-1	0,20	0,79	0,20	0,79	0,20
Value of N, for which μN=1/2 μN', [KN =10^(0,051T-1,158)] Vrijednos N za koje je μN=1/2 μN', [KN =10^(0,051T-1,158)]	KN	0,92 mg/l	0,18	0,92	0,18	0,92	0,18
Endogenous decay coefficient for nitrifying organisms Endogeni koeficijent raspadanja nitrifikovanih organizama	kdN	0,065 d-1	0,050	0,065	0,050	0,065	0,050
Min sludge age for complete nitrification (θcm = 1/(μN-kdN) Minimalna starost mulja za potpunu nitrifikaciju	θcm	2,09 d	7,41	2,09	7,41	2,09	7,41
Safety factor Faktor sigurnosti		2,00	2,00	2,00	2,00	2,00	2,00
Demanded sludge age for complete nitrification (θc=2*θcm) Potrebna starost mulja za potpunu nitrifikaciju	θc	4,18 d	14,82	4,18	14,82	4,18	14,82
Selected total sludge age θc Odabrana ukupna starost mulja		20,00 d	20,00	20,00	20,00	20,00	20,00
Biomass yield Prinos biomase	Y	0,85 grVSS/grBOD5	0,78	0,85	0,78	0,85	0,78
Endogenous decay coefficient Endogeni koeficijent raspadanja	kd	0,065 d-1	0,050	0,065	0,050	0,065	0,050
Removed BOD5 Uklonjeni BOD5	Sr	352,72 Kg/d 392,52 mg/l	352,72 392,52	705,44 392,52	705,44 392,52	229,27 392,51	229,27 392,51
VSS percentage, residual endogenous metabolism Procenat VSS, preostali endogeni metabolizam	β	0,15	0,15	0,15	0,15	0,15	0,15
Percentage of nitrifying bacteria Procenat nitrifikovanih bakterija	f	0,050	0,050	0,050	0,050	0,050	0,050
Inlet suspended solids Ulaz suspendovanih čvrstih supstanci	Xo	420,00 Kg/d 467,4 mg/l	420,00 467,4	840,00 467,4	840,00 467,4	273,00 467,4	273,00 467,4
Organic fraction of inlet suspended solids Dio organskog otpada čvrste materije	fo	0,70	0,70	0,70	0,70	0,70	0,70
Fraction of non-biodegradable organic in inlet suspended solids Dio nerazgradivog otpada čvrste materije	α	0,10	0,10	0,10	0,10	0,10	0,10
Produced biomass due to the development of heterotrophic bacteria Proizvedena biomasa zbog razvoja heterotrofnih bakterija Y * Sr * θc /(1 + kd * θc)	XB	2607,06 Kg	2751,21	5214,11	5502,42	1694,59	1788,29
Organic solids residual endogenous metabolism (cell debris) Ostatak organske čvrste materije endogenog metabolizma (ćelijski ostaci) Y * Sr * θc * β * kd * θc / (1 + kd * θc)	XK	508,38 Kg	412,68	1016,75	825,36	330,44	268,24
Produced biomass due to the development of autotrophic bacteria Proizvedena biomasa zbog razvoja autotrofnih bakterija [f / (1-f)] * Y * Sr * θc/(1+kd*θc)	XN	137,21 Kg	144,80	274,43	289,60	89,19	94,12
Inlet inorganic solids Ulaz neorganskih čvrstih supstanci (1-fo) * Xo * θc	Xoa	2520,00 Kg	2520,00	5040,00	5040,00	1638,00	1638,00
Non-biodegradable inlet organic solids Nerazgradivi ulaz organskih čvrstih materija α * fo * Xo * θc	XA	588,00 Kg	588,00	1176,00	1176,00	382,20	382,20

3/12/18

GEORGIOS [illegible]ANIAS
PRESIDENT

Solids in bioreactor Čvrste materije u bioreaktoru	M	6360,65 Kg	6416,69	12721,29	12833,39	4134,42	4170,85
Volatile Solids in bioreactor Promjenjive čvrste materije u bioreaktor Mv / M	Mv	3840,65 Kg 0,6	3896,69 0,6	7681,29 0,6	7793,39 0,6	2496,42 0,6	2532,85 0,6
MLSS concentration Koncentracija MLSS	X	4,00 Kg/m3	4,00	4,00	4,00	4,00	4,00
MLVSS concentration [Xv = (Mv / M) * X] Koncentracija MLVSS	Xv	2,4 Kg/m3	2,4	2,4	2,4	2,4	2,4
Demanded total volume (anoxic and aerobic) Potrebno ukupno vrijeme (anoksični i aerobni) (MLSS in bioreactor) / (MLSS concentration) (MLSS u bioreaktoru) / (Koncentracija MLSS)	VT	1590,16 m3	1604,17	3180,32	3208,35	1033,60	1042,71
Denitrification **Denitrifikacija**							
Total nitrogen in inlet Ukupni nitrogen u ulivu	TNi	66,00 Kg/d	66,00	132,00	132,00	42,90	42,90
N_NH4 outlet N_NH4 ispust	N_NH4e	2,00 mg/l 1,80 Kg/d	2,00 1,80	2,00 3,59	2,00 3,59	2,00 1,17	2,00 1,17
N_NO3 outlet N_NO3 ispust	N_NO3e	11,00 mg/l 9,88 Kg/d	11,00 9,88	11,00 19,77	11,00 19,77	11,00 6,43	11,00 6,43
Organic nitrogen in outlet Organski nitrogen u ispustu	Norge	2,00 mg/l 1,80 Kg/d	2,00 1,80	2,00 3,59	2,00 3,59	2,00 1,17	2,00 1,17
Nitrogen for biomass synthesis (15%*TNi) Nitrogen za sintezu biomase	Nsyn	9,90 Kg/d	9,90	19,80	19,80	6,44	6,44
BOD5 removal efficiency, (Si/ BOD5i) kasnost oklanjanja BOD5	E	0,980	0,980	0,980	0,980	0,980	0,980
Nitrogen to nitrification (TNo - N_NH4 e - Nouv0 - Nopyc) **Nitrogen u nitrifikaciju**	**Nr**	**52,51 KgN_NH4+/d**	**52,51**	**105,01**	**105,01**	**34,13**	**34,13**
Nitrogen to denitrification (Nar = Nr - N_NO3 e) **Nitrogen u denitrifikaciju**	**Nar**	**42,62 KgNO3_N/d**	**42,62**	**85,24**	**85,24**	**27,70**	**27,70**
Universal gas constant Univerzalna konstanta gasa	R	1,9872	1,9872	1,9872	1,9872	1,9872	1,9872
Design temperature Projektovana temperatura T (0K) = T (oC) + 273	T	22,00 oC 295,00 0K	8,00 281,00	22,00 295,00	8,00 281,00	22,00 295,00	8,00 281,00
Specific denitrification rate at T (0K), UDN = 6,4 x 1010 x exp(-15880/RT) Specifična brzina denitrifikacije u T (0K)	UDN	0,1101 KgN_NO3/kgMLVSS_d 0,0046 KgN_NO3/kgMLVSS_hr	0,0286 0,0012	0,1101 0,0046	0,0286 0,0012	0,1101 0,0046	0,0286 0,0012
Demanded denitrification volume, VAZT = Nar / (UDN*Xv) Potrebna zapremina denitrifikacije		161,04 m3	616,26	322,08	1232,52	113,73	432,50
Aeration **Prodavavanje**							
Bioreactors (oxidation ditches) number Broj bioreaktora (jama za oksidaciju)	η1	1,00	1,00	2,00	2,00	1,00	1,00
Bioreactors number (in operation) Broj bioreaktora (u upotrebi)	η2	1,00	1,00	2,00	2,00	1,00	1,00
Number of corridors per bioreactor Broj koridora po bioreaktoru	η3	2,00	2,00	2,00	2,00	2,00	2,00
Total corridors Ukupno koridora	η	2,00	2,00	4,00	4,00	2,00	2,00
Dimensions: **Dimenzije:**							
Liquid height Visina tečnosti	HA	5,00 m	5,00	5,00	5,00	5,00	5,00
Corridor aligned length Poravnata dužina koridora	LA1	21,00 m	21,00	21,00	21,00	21,00	21,00
Max aligned length of oxidation ditch Maksimalna poravnata dužina jama za oksidaciju	LA2	30,40 m	30,40	30,40	30,40	30,40	30,40
Corridor width Širina koridora	WA	4,50 m	4,50	4,50	4,50	4,50	4,50
Effective bioreactor volume Efektivna zapremina bioreaktora	VA	1269,80 m3	1269,80	1269,80	1269,80	1269,80	1269,80
Total effective bioreactors volume Ukupna efektivna zapremina bioreaktora	VA'	1269,80 m3	1269,80	2539,60	2539,60	1269,80	1269,80
Total effective bioreactors volume **Ukupna efektivna zapremina bioreaktora**	**VAT**	**1269,80 m3**	**1269,80**	**2539,60**	**2539,60**	**1269,80**	**1269,80**
Total effective predenitrification tanks volume ***Ukupna efektivna zapremina rezervoara za predenitrifikaciju***	**VAZT**	**363,00 m3**	**363,00**	**726,00**	**726,00**	**363,00**	**363,00**
Total effective volume (predenitrification - denitrification - aeration) ***Ukupna efektivna zapremina (predenitrifikacija - denitrifikacija - prodavavanje)*** VT=VAT	VT	1632,80 m3	1632,80	3265,60	3265,60	1632,80	1632,80

3/12/18

GEORGIOS KARAMIAS
PRESIDENT

Percentage of anoxic volume to total anoxic plus aerobic volume in oxidation ditch Procenat anoksične zapremine naspram ukupne i aerobne zapremine u jami za oksidaciji		25,00%	25,00%	25,00%	25,00%	25,00%	25,00%
Anoxic volume in oxidation ditch (denitrification) Anoksična zapremina u jami za oksidaciju (denitrifikacija	VAZT'	408,20 m3	408,20	816,40	816,40	408,20	408,20
Total anoxic volume (denitrification with predenitrification) Ukupna anoksična zapremina (denitrifikacija sa predenitrifikacijom	VAZT	771,20 m3	771,20	1542,40	1542,40	771,20	771,20
Total aeration volume Ukupno vrijeme prozračivanja	VZAT	1224,60 m3	1224,60	2449,20	2449,20	1224,60	1224,60
Hydraulic retention time in bioreactors θ1= VT / Qmax Hidraulično vrijeme zadržavanja u bioreaktorima	θ1	17,26 h 0,72 d	17,26 0,72	17,26 0,72	17,26 0,72	17,26 0,72	17,26 0,72
Hydraulic retention time in bioreactors θ2= VT / QADF Hidraulično vrijeme zadržavanja u bioreaktorima	θ2	43,61 h 1,82 d	43,61 1,82	43,61 1,82	43,61 1,82	67,09 2,80	67,09 2,80
MLSS concentration Koncentracija MLSS	X	4000 mg/l	4000	4000	4000	4000	4000

Sludge age θc is calculated from the equation:
Starost mulja θc se dobija iz jednačine:
$\theta^*X = ((Y^*Sr^*\theta c)/(1+kd^*\theta c))^*(1+\beta^*kd^*\theta c+(f/(1-f))) + fo^*Xo^*\theta c^*((1-fo)/fo+a)$

Total sludge age **Ukupna starost mulja**	**θc**	**20,68 d**	**20,44**	**20,68**	**20,44**	**35,63**	**35,02**
Volumetric BOD loading (BOD5i/VT) **Zapreminsko opterećenje BOD**	**Cv**	**0,22** Kg BOD5/m3.d	**0,22**	**0,22**	**0,22**	**0,14**	**0,14**
Food to microorganism ratio **Odnos između hrane i mikroorganizama**	**F / M**	**0,06** Kg BOD5/Kg MLSS.d	**0,06**	**0,06**	**0,06**	**0,04**	**0,04**
	F / Mv	0,09 Kg BOD5/Kg MLVSS d	0,09	0,09	0,09	0,06	0,06
Solids in bioreactor (VT * concentration MLSS (X)) Čvrste supstance u bioreaktoru (VT * koncentracija MLSS (X)	M	6531,20 KgMLSS	6531,20	13062,40	13062,40	6531,20	6531,20
Volatile Solids in bioreactor = Solids * (Mv / M) Promjenjive čvrste materije u bioreaktoru = Čvrste materije * (Mv / M)	Mv	3925,43 KgMLVSS	3955,29	7850,87	7910,59	3612,76	3663,27

Excess sludge production **Višak proizvodnje mulja** Produced biomass due to the development of heterotrophic bacteria Proizvedena biomasa usljed razvoja heterotrofnih bakterija Y * Sr /(1 + kd * θc)	XB	127,89 Kg/d	136,05	255,79	272,10	58,76	65,01
Organic solids residual endogenous metabolism (cell debris) Ostatak organske čvrste materije endogenog metabolizma (ćelijski ostaci Y * Sr * β * kd * θc / (1 + kd * θc)	XK	25,79 Kg/d	20,86	51,58	41,72	20,42	17,07
Produced biomass due to the development of autotrophic bacteria Proizvedena biomasa zbog razvoja autotrofnih bakterija [f / (1-f)] * Y * Sr /(1+kd*θc)	XN	6,73 Kg/d	7,16	13,46	14,32	3,09	3,42
Inlet inorganic solids Ulivi neorganskih čvrstih supstanci (1-fo) * Xo	Xoa	126,00 Kg/d	126,00	252,00	252,00	81,90	81,90
Non-biodegradable inlet organic solids Nerazgradivi uliv organskih čvrstih materija α * fo * Xo	XA	29,40 Kg/d	29,40	58,80	58,80	19,11	19,11
Total biomass quantity in bioreactor Ukupna količina biomase u reaktoru	ΔX	315,81 Kg/d	319,47	631,62	638,95	183,28	186,51
Quantity of volatiles solids in bioreactor Količina promjejivih čvrstih materija u bioreaktoru Mv / M	ΔXv	189,81 Kg/d 0,6	193,47 0,6	379,62 0,6	386,95 0,6	101,38 0,6	104,61 0,6
	Xv	2404 mg/l	2422	2404	2422	2213	2244
Solids quantity in outlet (Qmax * SSe) Količina čvrstih materija u ispustu		56,76 Kg/d	56,76	113,52	113,52	56,76	56,76
Sludge quantity for removal, (ΔX - Qmax * SSe) Količina mulja za uklanjanje	Pw	259,05 Kg/d	262,71	518,10	525,43	126,52	129,75
Biological excess sludge quantity Biološki višak količine mulja	Mbs	259,05 Kg/d	262,71	518,10	525,43	126,52	129,75
Chemical sludge quantity Hemijska količina mulja	Mchs	49,83 Kg/d	49,83	99,67	99,67	32,39	32,39
Total sludge quantity for removal, (Mbs+Mchs) Ukupna količina mulja za uklanjanje	Pw'	308,89 Kg/d	312,55	617,77	625,09	158,92	162,14
Removed sludge from excess PS, (Pw' / XR) Uklonjeni mulj iz viška PS	Qw'	38,61 m3/d	39,07	77,22	78,14	19,86	20,27

Sludge return **Povratak mulja** Sludge return concentration from FST Koncentracija povratnog mulja iz FST	XR	8000 mg/l	8000	8000	8000	8000	8000
Sludge return volatiles concentration Povratak mulja promjenjive koncentracije	XRV	4808 mg/l	4845	4808	4845	4425	4487
Return sludge flow (Qmax*X/(XR-X)) Protok povratnog mulja	QR	94,60 m3/hr	94,60	189,20	189,20	94,60	94,60
Return percentage Procenat povratka	R	100%	100%	100%	100%	100%	100%
Return pumps flow Protok pumpi povratnog mulja	Qpump	94,60 m3/hr	94,60	189,20	189,20	94,60	94,60
Number of return sludge pumps Broj pumpi povratnog mulja		1	1	2	2	1	1
Return pump flow Protok pumpe povratnog mulja	Qpump_R	94,6 m3/hr	94,6	94,6	94,6	94,6	94,6

GEORGIOS [illegible]ANKANIAS
PRESIDENT
3/12/18

Oxygen demand
Potrebni kiseonik
a. Oxidation of organic compounds
Oksidacija organskih jedinjenja

Oxygen demand coefficient Koeficijent potrebnog kiseonika OD1 =FBOD5*Sr	FBOD5 OD1	0,60 kgO2/kgBOD5 211,63 kgO2/d	0,60 211,63	0,60 423,26	0,60 423,26	0,60 137,56	0,60 137,56

b. Oxidation of N_NH4 (nitrification)
Oksidacija N_NH4 (nitrifikacija)

Nitrification coefficient Koeficijent nitrifikacije OD2 = FN*Nr	FN OD2	4,60 kgO2/kgNH4+ 241,53 kgO2/d	4,60 241,53	4,60 483,05	4,60 483,05	4,60 156,99	4,60 156,99

c. Endogenous decay
Endogeni raspad

OD3 = 0,072* Ma * 1,07 (T-20) Ma = X*VT	OD3	538,39 kgO2/d	208,80	1076,77	417,59	538,39	208,80

d. Denitrification
Denitrifikacija

Denitrification coefficient Koeficijent denitrifikacije OD4 = FD*Nar	FD OD4	2,90 kgO2/kgN03- 123,60 kgO2/d	2,90 123,60	2,90 247,20	2,90 247,20	2,90 80,34	2,90 80,34

Total oxygen demand under field conditions **Ukupni potrebni kiseonik pod radnim uslovima** No = OD1+ OD2 + OD3 - OD4	No	867,94 kgO2/d 36,16 KgO2/hr	538,35 22,43	1735,88 72,33	1076,70 44,86	752,60 31,36	423,01 17,63
Demanded oxygen under field conditions (No / Sr) **Potrebni kiseonik pod radnim uslovima**		**2,46 KgO2/KgBODunop**	**1,53**	**2,46**	**1,53**	**3,28**	**1,85**

SOR calculation
SOR kalkulacija
(tap water, 20oC, zero dissolved oxygen)
(voda iz vodovoda, 20oC, nula rastvorenog kiseonika)

$$\frac{No}{N} = \alpha \frac{\beta * E * Cw - CL}{Cw,20} * 1,024^{(T-20)}$$

Actual oxygen rate under field conditions (AOR) Stvarna brzinakiseonika pod radnim uslovima (AOR)	No	867,94 kgO2/d	538,35	1735,88	1076,70	752,60	423,01
Oxygen transfer correction factor for waste, typically 0.4-0.8, α= e-0,084*MLSS Korekcioni faktor prenosa kiseonika za otpad, obično 0.4-0.8, α= e-0,084*MLSS	α	0,71	0,71	0,71	0,71	0,71	0,71
Salinity-surface tension correction factor, typically 0.95 - 0.98 Korekcioni faktor pritiska slane površine, obično 0.95 - 0.98	β	0,95	0,95	0,95	0,95	0,95	0,95
Operating oxygen concentration Operativna koncentracija kiseonika	CL	2 mg/l	2	2	2	2	2
Oxygen saturation concentration in tap water and design temperature Koncentracija zasićenja kiseonikom u vodi iz vdovoda i projektovanoj temperatur	Cw	8,73 mg/l	11,83	8,73	11,83	8,73	11,83
Dissolved oxygen saturation concentration under standard conditions Koncentracija zasićenja rastvorenim kiseonikom pod standardnim uslovima	Cw,20	9,07 mg/l (στους 20 oC)	9,07	9,07	9,07	9,07	9,07
Design temperature Projektovana temperatura	T	22,00 °C	8,00	22,00	8,00	22,00	8,00
Standard oxygen rate (SOR) Standardna brzina kiseonika (SOR)	N	1669,3 kgO2/d 69,6 kgO2/hr	983,1 41,0	3338,6 139,1	1966,2 81,9	1447,4 60,3	772,5 32,2
Safety factor Faktor sigurnosti		1,03	1,03	1,03	1,03	1,03	1,03
Max oxygen demand under standard conditions Maksimalni potrebni kiseonik u standardnim uslovima	N'	1719,4 kgO2/d 71,6 kgO2/hr	1012,6 42,2	3438,7 143,3	2025,2 84,4	1490,9 62,1	795,6 33,2

Diffusers selection **Odabir difuzora**							
Diffusers submergence Potapanje difuzora		4,77 m	4,77	4,77	4,77	4,77	4,77
Diffusers efficiency, SOTE Efikasnost difuzora	n	31,01%	31,01%	31,01%	31,01%	31,01%	31,01%
Air flow per diffuser Protok vazduha po difuzoru		4,034 Nm3/hr_διαχυτή	4,034	4,034	4,034	4,034	4,034
Oxygen concenration in air Koncentracija kiseonika u vazduhu		0,30 kgO2/Nm3αέρα	0,30	0,30	0,30	0,30	0,30
Diffusers number per oxidation ditch **Broj difuzora po jami za oksidaciju**		**192 διαχυτές**	**192**	**192**	**192**	**192**	**192**
Total Diffusers number **Ukupni broj difuzora**		**192 διαχυτές**	**192**	**384**	**384**	**192**	**192**
Standard Oxygen Rate, SOR **Standardna brzina kiseonika, SOR**		**72,0 KgO2/h** **4,90 KgO2/KgBOD5rev**	**72,0** **4,90**	**144,0** **4,90**	**144,0** **4,90**	**72,0** **7,54**	**72,0** **7,54**

3/12/18
GEORGIOS [illegible]ANIAS
PRESIDENT

Blowers selection
Izbor uređaja za produvavanje

Demanded air flow						
Potrebni protok vazduha	774,5 Nm3 αέρα / hr	774,5	1549,0	1549,0	774,5	774,5
Blowers number (in operation)						
Broj uređaja za produvavanje (u upotrebi)	1 φυσητήρες	1	2	2	1	1
Demanded blower air flow						
Potreban protok produvanog vazduha	774,5 Nm3 αέρα / hr	774,5	774,5	774,5	774,5	774,5
Blower air flow						
Protok produvanog vazduha	776 Nm3 αέρα / hr	776	776	776	776	776

3/12/18

GEORGIOS KARKANTAS
PRESIDENT

Chemical precipitation of phosphorus
Hemijska fosforna precipitacija

		1st STAGE 1. FAZA 6000 PE Summer Ljeto	1st STAGE 1. FAZA 6000 Winter Zima	2st STAGE 2. FAZA 12000 Summer Ljeto	2st STAGE 2. FAZA 12000 Winter Zima	Start up Početak 3900 Summer Ljeto	Start up Početak 3900 Winter Zima
Average Dry Weather Daily Flow Srednji dnevni protok po suvom vremenu	QADF	898,60 m3/d 37,4 m3/h	898,60 37,4	1797,20 74,9	1797,20 74,9	584,10 24,3	584,10 24,3
Maximum Wet Weather Daily Flow Maksimalni dnevni protok po vlažnom vremenu	Qmax	2270,40 m3/d 94,60 m3/h	2270,40 94,60	4540,80 189,20	4540,80 189,20	2270,40 94,60	2270,40 94,60
Sludge Recirculation Flow (100%Qmax) Protok recirkulacije mulja	Qr	94,60 m3/h	94,60	189,20	189,20	94,60	94,60
Wet Weather Flow Protok po vlažnom vremenu	QWWF	94,6 m3/h	94,6	189,2	189,2	94,6	94,6
Maximum Wet Weather Daily Flow Maksimalni dnevni protok po vlažnom vremenu	Qmax	2270,40 m3/d	2270,40	4540,80	4540,80	2270,40	2270,40
Total phosphorus in inlet Ukupni fosfor u ulivu	Pimax	10,80 Kg/d 4,76 mg/l	10,80 4,76	21,60 4,76	21,60 4,76	7,02 3,09	7,02 3,09
Phosphorus for biomass synthesis (15%*Pimax) Fosfor za sintezu biomase (15%Pimax)	Psyn	1,62 Kg/d	1,62	3,24	3,24	1,05	1,05
Total phosphorus outlet Ukupni fosforni ispust	Pe	2,00 mg/l 4,54 Kg/d	2,00 4,54	2,00 9,08	2,00 9,08	2,00 4,54	2,00 4,54
Quantity of P for chemical precipitation, **Pch = Pimax - Psyn - Pe** **Količina P za hemijske padavine**	**Pch**	**2,04 mg/l** **4,64 Kg/d**	**2,04** **4,64**	**2,04** **9,28**	**2,04** **9,28**	**0,63** **1,43**	**0,63** **1,43**
Daily demanded quantity of Fe (Fe = 2.7 * Pch) Dnevna potrebna količina Fe (Fe = 2.7 * Pch)	Fe	12,53 Kg/d	12,53	25,05	25,05	3,85	3,85
Solution composition (FeSO4) in Fe Sastav rastvora (FeSO4) u Fe		7,00%	7,00%	7,00%	7,00%	7,00%	7,00%
Solution density (FeSO4) Gustina rastvora FeSO4	C	1,20 Kg/l	1,20	1,20	1,20	1,20	1,20
Demanded daily flow solution FeSO4 **Potrebni dnevni protok rastvora FeSO4**		**149,12 l/d**	**149,12**	**298,23**	**298,23**	**45,84**	**45,84**
Demanded stogare time Potrebno vrijeme za skladištenje		30,00 d	30,00	30,00	30,00	30,00	30,00
Demanded stogare volume Potrebna zapremina za skladištenje		4474 l	4474	8947	8947	1375	1375

3/12/18

GEORGIOS KARKANIAS
PRESIDENT

Dosing pump dimensioning FeSO4
Dozirna pumpa dimenzionisana FeSO4

Wet Weather Flow							
Protok po vlažnom vremenu	QWWF	94,6 m3/hr	94,6	189,2	189,2	94,6	94,6
Quantity of P for chemical precipitation							
Količina P za hemijske padavine	Pch	2,04 mg/l	2,04	2,04	2,04	0,63	0,63
		0,19 Kg/h	0,19	0,39	0,39	0,06	0,06
Hourly demanded quantity of Fe, Fe = 2.7 * Pch							
Potrebna količina po satu FE, Fe = 2.7 * Pch	Fe	0,52 Kg/h	0,52	1,04	1,04	0,16	0,16
Demanded solution flow FeSO4 for QWWF							
Potreban protok rastvora FeSO4 za QWWF		**6,21 l/hr**	**6,21**	**12,43**	**12,43**	**1,91**	**1,91**
Safety factor							
Faktor sigurnosti		1,15	1,15	1,15	1,15	1,15	1,15
Pumps number in operation							
Broj pumpi u upotrebi		1	1	2	2	1	1
Demanded pump flow FeSO4							
Potreban protok pumpi FeSO4		**7,15 l/hr**	**7,15**	**7,15**	**7,15**	**2,20**	**2,20**

Chemical sludge quantity
Hemijska količina mulja

Demanded daily quantity of Fe							
Potrebna dnevna količina Fe	Fe	12,53 Kg/d	12,53	25,05	25,05	3,85	3,85
Phosphorus for biomass synthesis (15%*Pimax)							
osfor za sintezu biomase (15%Pimax)	**Mch.sl**	**31,31 Kg/d**	**31,31**	**62,63**	**62,63**	**9,63**	**9,63**

Average Dry Weather Daily Flow							
Srednji dnevni protok po suvom vremenu	QADF	898,60 m3/d	898,60	1797,20	1797,20	584,10	584,10
Total phosphorus in inlet							
Ukupni fosfor u ulivu	Pimax	10,80 Kg/d	10,80	21,60	21,60	7,02	7,02
		12,0 mg/l	12,0	12,0	12,0	12,0	12,0
Phosphorus for biomass synthesis (15%*Pimax)							
Fosfor za sintezu biomase (15%Pimax)	Psyn	1,62 Kg/d	1,62	3,24	3,24	1,05	1,05
Total phosphorus outlet							
Ukupni ispust fosfora	Pe	2,00 mg/l	2,00	2,00	2,00	2,00	2,00
		1,80 Kg/d	1,80	3,59	3,59	1,17	1,17
Quantity of P for chemical precipitation, Pch = Pimax - Psyn - Pe							
Količina P za hemijske padavine	**Pch**	**8,22 mg/l**	**8,22**	**8,22**	**8,22**	**8,22**	**8,22**
		7,38 Kg/d	**7,38**	**14,77**	**14,77**	**4,80**	**4,80**
aily demanded quantity of Fe (Fe = 2.7 * Pch)							
Dnevna potrebna količina Fe (Fe = 2.7 * Pch)	Fe	19,93 Kg/d	19,93	39,87	39,87	12,96	12,96
Solution composition (FeSO4) in Fe							
Sastav rastvora (FeSO4) u Fe		7,00%	7,00%	7,00%	7,00%	7,00%	7,00%
Solution density (FeSO4)							
Gustina rastvora (FeSO4)	C	1,20 Kg/l	1,20	1,20	1,20	1,20	1,20
Demanded dialy flow solution FeSO4							
Potreban dnevni protok rastvora FeSO4		**237,30 l/d**	**237,30**	**474,61**	**474,61**	**154,25**	**154,25**
Demanded stogare time							
Potrebno vrijeme za skladištenje		30,00 d	30,00	30,00	30,00	30,00	30,00
Demanded stogare volume							
Potrebna zapremina za skladištenje		7119 l	7119	14238	14238	4627	4627

3/12/18

GEORGIOS KARANIAS
PRESIDENT

Dosing pump dimensioning FeSO4
Dozirna pumpa dimenzionisana FeSO4

Wet Weather Flow Protok po vlažnom vremenu	QWWF	94,6 m3/hr	94,6	189,2	189,2	94,6	94,6
Quantity of P for chemical precipitation Količina P za hemijske padavine	Pch	8,22 mg/l 0,78 Kg/h	8,22 0,78	8,22 1,55	8,22 1,55	8,22 0,78	8,22 0,78
Hourly demanded quantity of Fe, Fe = 2.7 * Pch Potrebna količina po satu FE, Fe = 2.7 * Pch	Fe	2,10 Kg/h	2,10	4,20	4,20	2,10	2,10
Demanded solution flow FeSO4 for QWWF **Potreban protok rastvora FeSO4 za QWWF**		**24,98 l/hr**	**24,98**	**49,96**	**49,96**	**24,98**	**24,98**
Safety factor Faktor sigurnosti		1,15	1,15	1,15	1,15	1,15	1,15
Pumps number in operation Broj pumpi u upotrebi		1	1	2	2	1	1
Demanded pump flow FeSO4 **Potreban protok pumpi FeSO4**		**28,73 l/hr**	**28,73**	**28,73**	**28,73**	**28,73**	**28,73**

Chemical sludge quantity
Hemijska količina mulja

Demanded daily quantity of Fe Potrebna dnevna količina Fe	Fe	19,93 Kg/d	19,93	39,87	39,87	12,96	12,96
Phosphorus for biomass synthesis (15%*Pimax) sfor za sintezu biomase (15%Pimax)	**Mch.sl**	**49,83 Kg/d**	**49,83**	**99,67**	**99,67**	**32,39**	**32,39**

3/12/18

GEORGIOS KARKANIAS
PRESIDENT

Final Settling Tanks
Bazen za finalno taloženje

		1st STAGE 1. FAZA 6000 PE Summer Ljeto	1st STAGE 1. FAZA 6000 Winter Zima	2st STAGE 2. FAZA 12000 Summer Ljeto	2st STAGE 2. FAZA 12000 Winter Zima	Start up Početak 3900 Summer Ljeto	Start up Početak 3900 Winter Zima
Average Dry Weather Daily Flow							
Srednji dnevni protok po suvom vremenu	QADF	898,60 m3/d	898,60	1797,20	1797,20	584,10	584,10
		37,44 m3/hr	37,44	74,88	74,88	24,34	24,34
Maximum Dry Weather Hourly Flow							
Maksimalni protok po satu po suvom vremenu	QMHF	78,80 m3/hr	78,80	157,60	157,60	51,20	51,20
Maximum Wet Weather Daily Flow	Qmax						
Maksimalni dnevni protok po vlažnom vremenu		2270,40 m3/d	2270,40	4540,80	4540,80	2270,40	2270,40
		94,60 m3/hr	94,60	189,20	189,20	94,60	94,60
Wet Weather Flow							
Protok po vlažnom vremenu	QWWF	94,6 m3/hr	94,6	189,2	189,2	94,6	94,6
Sludge return flow (100%Qmax)							
Povratni protok mulja (100%Qmax)	Qr	94,60 m3/hr	94,60	189,20	189,20	94,60	94,60
Max Surface loading for Qmax							
Maksimalno površinsko opterećenje za Qmax	Cs	0,65 m3/m²_h	0,65	0,65	0,65	0,65	0,65
Solids loading for Qmax +Qr							
Opterećenje čvrstim supstancama za Qmax+Qr	C	6,00 Kg/m²_h	6,00	6,00	6,00	6,00	6,00
		144,00 Kg/m²_d	144,00	144,00	144,00	144,00	144,00
Mixed liquor concentration (MLSS)							
ješana vodena koncentracija (MLSS)	X	4000,00 mg/l	4000,00	4000,00	4000,00	4000,00	4000,00
Number of tanks							
Broj rezervoara	v1	1	1	2	2	1	1
Number of tanks in operation							
Broj rezervoara u upotrebi	v2	1	1	2	2	1	1
Demanded tank diameter (for Surface loading.)	Do	13,6 m	13,6	13,6	13,6	13,6	13,6
Potrebni prečnik rezervoara (za površinsko opterećenje)							
Demanded tank diameter (for Solids loading)	Do'	12,7 m	12,7	12,7	12,7	12,7	12,7
Potrebni prečnik rezervoara (za opterećenje čvrstim supstancama							
Tank diameter							
Prečnik rezervoara	D	14,0 m	14,0	14,0	14,0	14,0	14,0
Tank surface							
Površina rezervoara	S	153,86 m²	153,86	153,86	153,86	153,86	153,86
Total tanks surface							
Ukupna površina rezervoara	St	153,86 m²	153,86	307,72	307,72	153,86	153,86
Tank overflow weir length							
Dužina prelivne pregrade rezervoara	NL	39,9 m	39,9	39,9	39,9	39,9	39,9
Overflow length per weir meter							
Prelivna dužina po metru pregrade	L'	0,67	0,67	0,67	0,67	0,67	0,67
Overflow length of tank							
elivna dužina rezervoara	L	26,72 m	26,72	26,72	26,72	26,72	26,72
Total overflow length of tanks							
Ukupna prelivna dužina rezervoara	Lt	26,72 m	26,72	53,44	53,44	26,72	26,72
Lateral liquid height into the tank							
Bočna visina tečnosti u rezervoaru	H1	4,0 m	4,0	4,0	4,0	4,0	4,0
Average lateral liquid height into the tank							
Prosječna bočna visina tečnosti u rezervoaru	H2	4,15 m	4,15	4,15	4,15	4,15	4,15
Tank volume							
Zapremina rezervoara	V	638,52 m3	638,52	638,52	638,52	638,52	638,52
Total tanks volume							
Ukupna zapremina rezervoara	Vt	638,52 m3	638,52	1277,04	1277,04	638,52	638,52

3/12/18

GEORGIOS KARKANIAS
PRESIDENT

Retention time in QWWF (Vt/QWWF)							
Vrijeme zadržavanja u QWWF (Vt/QWWF)	t1	6,7 hr	6,7	6,7	6,7	6,7	6,7
Retention time in Qmax+Qr [Vt/(Qmax+Qr)]							
Vrijeme zadržavanja u Qmax+Qr [Vt/(Qmax+Qr)]	t2	3,37 hr	3,37	3,37	3,37	3,37	3,37
Retention time in QADF+Qr [Vt/(QADF+Qr)]							
Vrijeme zadržavanja u QADF+Qr [Vt/(QADF+Qr)]	t3	4,84 hr	4,84	4,84	4,84	5,37	5,37
Surface loading for QADF (QADF/St)							
Površinsko opterećenje za QADF (QADF/St)	Cs1	0,24 m3/m²_h	0,24	0,24	0,24	0,16	0,16
Surface loading for QMHF (QMHF/St)							
Površinsko opterećenje za QMHF (QMHF/St)	Cs2	0,51 m3/m²_h	0,51	0,51	0,51	0,33	0,33
Surface loading for Qmax (Qmax/St)							
Površinsko opterećenje za Qmax (Qmax/St)	Cs3	0,61 m3/m²_h	0,61	0,61	0,61	0,61	0,61
Surface loading for QWWF (QWWF/St)							
Površinsko opterećenje za QWWF (QWWF/St)	Cs4	0,61 m3/m²_h	0,61	0,61	0,61	0,61	0,61
Solids loading for QADF + Qr [X *(QADF+Qr)/St]							
Opterećenje čvrste supstance za QADF + Qr [X *(QADF+Qr)/St]	C1	3,43 Kg/m²_h	3,43	3,43	3,43	3,09	3,09
Solids loading for QMHF + Qr [X *(QMHF+Qr)/St]							
Opterećenje čvrste supstance za QMHF + Qr [X *(QMHF+Qr)/St]	C2	4,51 Kg/m²_h	4,51	4,51	4,51	3,79	3,79
Solids loading for Qmax + Qr [X *(Qmax+Qr)/St]							
Opterećenje čvrste supstance za Qmax + Qr [X *(Qmax+Qr)/St]	C3	4,92 Kg/m²_h	4,92	4,92	4,92	4,92	4,92
Flow rate in overflow for QADF (QADF/Lt)							
Brzina protoka u prelivu za QADF (QADF/Lt)	u1	33,63 m3/m_d	33,63	33,63	33,63	21,86	21,86
Flow rate in overflow for Qmax (Qmax/Lt)							
Brzina protoka u prelivu za Qmax (Qmax/Lt)	u2	84,98 m3/m_d	84,98	84,98	84,98	84,98	84,98
ow rate in overflow for QWWF (QWWF /Lt)							
Brzina protoka u prelivu za QWWF (QWWF /Lt)	u3	84,98 m3/m_d	84,98	84,98	84,98	84,98	84,98
		3,54 m3/m_h	3,54	3,54	3,54	3,54	3,54

3/12/18

GEORGIOS KARKANIAS
PRESIDENT

Filtration Unit
Jedinica za filtraciju

		1st STAGE 1. FAZA 6000 PE Summer Ljeto	1st STAGE 1. FAZA 6000 Winter Zima	2st STAGE 2. FAZA 12000 Summer Ljeto	2st STAGE 2. FAZA 12000 Winter Zima	Start up Početak 3900 Summer Ljeto	Start up Početak 3900 Winter Zima
Average Dry Weather Daily Flow							
Srednji dnevni protok po suvom vremenu	QADF	898,60 m3/d	898,60	1797,20	1797,20	584,10	584,10
		37,44 m3/hr	37,44	74,88	74,88	24,34	24,34
Maximum Wet Weather Daily Flow	Qmax						
Maksimalni dnevni protok po vlažnom vremenu		2270,40 m3/d	2270,40	4540,80	4540,80	2270,40	2270,40
		94,60 m3/hr	94,60	189,20	189,20	94,60	94,60
Wet Weather Flow							
Protok po vlažnom vremenu	QWWF	94,60 m3/hr	94,60	189,20	189,20	94,60	94,60
Surface loading for QWWF							
Površinsko opterećenje za QWWF	Cs	40 m3/m²_h	40	40	40	40	40
Demanded active filter surface (~65% of total)							
Potrebna aktivna površina filtera (~65% od ukupne)	So	2,37 m²	2,37	4,73	4,73	2,37	2,37
emanded total filter surface							
otrebna ukupna površina filtera	So'	3,64 m²	3,64	7,28	7,28	3,64	3,64
Number of filters							
Broj filtera	v	1	1	2	2	1	1
Drum diameter							
Prečnik doboša	d	0,93 m	0,93	0,93	0,93	0,93	0,93
Drum length							
Dužina doboša	l	1,5 m	1,5	1,5	1,5	1,5	1,5
Filter surface							
Površina filtera	S	3,75 m²	3,75	3,75	3,75	3,75	3,75
Total filters surface							
Ukupna površina filtera	Sdoλ	3,75 m²	3,75	7,50	7,50	3,75	3,75
Total active filters surface (~65% of total)							
Ukupna aktivna površina filtera (~65% od ukupne)	Soλ	2,39 m²	2,39	4,78	4,78	2,39	2,39
Surface loading for QADF							
Površinsko opterećenje za QADF	Cs1	15,67 m3/m²_h	15,67	15,67	15,67	10,18	10,18
Surface loading for Qmax							
Površinsko opterećenje za Qmax	Cs2	39,58 m3/m²_h	39,58	39,58	39,58	39,58	39,58
urface loading for QWWF							
ovršinsko opterećenje za QWWF	Cs3	39,6 m3/m²_h	39,6	39,6	39,6	39,6	39,6
Number of tanks							
Broj rezervoara	n	1	1	1	1	1	1
Tank dimensions							
Dimenzije rezervoara							
Width							
Širina	W	1,15 m	1,15	1,15	1,15	1,15	1,15
Length							
Dužina	L	2,80 m	2,80	2,80	2,80	2,80	2,80
Height							
Visina	H	1,25 m	1,25	1,25	1,25	1,25	1,25

3/12/18

GEORGIOS KARKANIAS
PRESIDENT

UV DISINFECTION UNIT
UV dezinfekciona jedinica

		1st STAGE 1. FAZA 6000 PE Summer Ljeto	1st STAGE 1. FAZA 6000 Winter Zima	2st STAGE 2. FAZA 12000 Summer Ljeto	2st STAGE 2. FAZA 12000 Winter Zima	Start up Početak 3900 Summer Ljeto	Start up Početak 3900 Winter Zima
Average Dry Weather Daily Flow							
Srednji dnevni protok po suvom vremenu	QADF	898,60 m3/d	898,60	1797,20	1797,20	584,10	584,10
		37,44 m3/hr	37,44	74,88	74,88	24,34	24,34
Maximum Dry Weather Hourly Flow							
Maksimalni protok po satu po suvom vremenu	QMHF	78,80 m3/hr	78,80	157,60	157,60	51,20	51,20
Design flow	Qmax						
Projektovani protok		2270,40 m3/d	2270,40	4540,80	4540,80	2270,40	2270,40
		94,60 m3/hr	94,60	189,20	189,20	94,60	94,60
Wet Weather Flow							
Protok po vlažnom vremenu	QWWF	94,6 m3/hr	94,6	189,2	189,2	94,6	94,6
Number of tanks							
Broj rezervoara	N	1	1	2	2	1	1
Total height							
Ukupna visina	B1	1,60 m	1,600	1,600	1,600	1,600	1,600
Liquid height (min)							
Visina tečnosti (min)	B2	1,200 m	1,200	1,200	1,200	1,200	1,200
Width							
Širina	Π	0,612 m	0,612	0,305	0,305	0,305	0,305
Length							
Dužina	M	3,00 m	3,00	3,00	3,00	3,00	3,00
Effective tank volume							
Efektivna zapremina rezervoara	V	2,203 m3	2,203	2,203	2,203	2,203	2,203
Total effective tanks volume							
Ukupna efektivna zapremina rezervoara	Vt	2,203 m3	2,203	2,203	2,203	2,203	2,203
Retention time for QWWF (V/ QWWF)							
Vrijeme zadržavanja za QWWF (V/ QWWF)	t1	84 sec	84	42	42	84	84
Retention time for QADF							
Vrijeme zadržavanja za QADF	t2	212 sec	212	106	106	326	326
Retention time for Qmax							
Vrijeme zadržavanja za Qmax	t3	84 sec	84	42	42	84	84

3/12/18
GEORGIOS KARKANIAS
PRESIDENT

Sludge aerobic stabilization & thickening tank
Bazen za aerobnu stabilizaciju i zgušnjavanje mulja

		1st STAGE 1. FAZA 6000 PE Summer Ljeto	1st STAGE 1. FAZA 6000 Winter Zima	2st STAGE 2. FAZA 12000 Summer Ljeto	2st STAGE 2. FAZA 12000 Winter Zima	Start up Početak 3900 Summer Ljeto	Start up Početak 3900 Winter Zima
Max solids loading Maksimalna količina čvrste materije	Cs	25,0 kg/m2/d	25,0	25,0	25,0	25,0	25,0
Loss of mass by sludge stabilization Gubitak mase prilikom stabilizacije mulja	α	90,00%	90,00%	90,00%	90,00%	90,00%	90,00%
Excess sludge concetration Višak koncentracije mulja	Xil	0,80%	0,80%	0,80%	0,80%	0,80%	0,80%
Sludge quantity for stabilization/thickening Količina mulja za stabilizaciju / ugušćavanje	ΔPxl	308,89 Kg/d	312,55	617,77	625,09	158,92	162,14
Sludge flow for stabilization/thickening Protok mulja za stabilizaciju / ugušćavanje	ΔPql	38,61 m3/d	39,07	77,22	78,14	19,86	20,27
Stabilized / thickened sludge concetration Stabilizovana / ugušćena koncentracija mulja	Xol	2,5%	2,5%	2,5%	2,5%	2,5%	2,5%
Stabilized / thickened sludge quantity Stabilizovana / ugušćena količina mulja		278,00 Kg/d	281,29	555,99	562,58	143,02	145,93
abilized / thickened sludge flow stabilizovan / ugušćen protok mulja		11,12 m3/d	11,25	22,24	22,50	5,72	5,84
Drainage flow Drenažni protok		27,49 m3/d	27,82	54,98	55,63	14,14	14,43
Average solids concentration into the tank Prosječna koncentracija čvrste materije u rezervoaru	Xul	1,50%	1,50%	1,50%	1,50%	1,50%	1,50%
Sludge daily flow for thickening design Dnevni protok mulja za projekat ugušćavanja	ΔPrl	20,6 m3/d	20,8	41,2	41,7	10,6	10,8
Demanded surface (ΔPx / Cs) Potrebna površina	So	12,4 m²	12,5	24,7	25,0	6,4	6,5
Number of tanks Broj rezervoara	v	1	1	1	1	1	1
Demanded tank diameter Potrebni prečnik rezervoara	Do	3,97 m	3,99	5,61	5,64	2,85	2,87
Tank diameter Prečnik rezervoara	D	10 m	10	10	10	10	10
Tank surface Površina rezervoara	S	78,5 m²	78,5	78,5	78,5	78,5	78,5
Total tanks surface Ukupna površina rezervoara	St	78,5 m²	78,5	78,5	78,5	78,5	78,5
ateral slugde height into the tank Bočna visina mulja u rezervoaru	H1	4,5 m	4,5	4,5	4,5	4,5	4,5
Average lateral sludge height into the tank Prosječna bočna visina mulja u rezervoaru	H2	4,5 m	4,5	4,5	4,5	4,5	4,5
Tank volume Zapremina rezervoara	V	353,25 m3	353,25	353,25	353,25	353,25	353,25
Total tanks volume Ukupna zapremina rezervoara	Vt	353,25 m3	353,25	353,25	353,25	353,25	353,25
Solids loading Količina čvrste materije		3,93 Kg/m²_d	3,98	7,87	7,96	2,02	2,07
Sludge retention time Vrijeme zadržavanja mulja		411,71 hr 17,15 d	406,88 16,95	205,85 8,58	203,44 8,48	800,23 33,34	784,30 32,68
Air demand **Vazdušni zahtjevi** Air flow Protok vazduha							
Total air flow Ukupni protok vazduha	Qair =	1,50 m3/hr/m3	1,50	1,50	1,50	1,50	1,50
	Qtot =	529,9 m3/hr	529,9	529,9	529,9	529,9	529,9

3/12/18

GEORGIOS KARKANIAS
PRESIDENT

Sludge holding tank
Bazen za mulj

		1st STAGE 1. FAZA 6000 PE Summer Ljeto	1st STAGE 1. FAZA 6000 Winter Zima	2st STAGE 2. FAZA 12000 Summer Ljeto	2st STAGE 2. FAZA 12000 Winter Zima	Start up Početak 3900 Summer Ljeto	Start up Početak 3900 Winter Zima
Stabilized / thickened sludge quantity Stabilizovana / uguščena količina mulja	ΔPy	278,00 Kg/d	281,29	555,99	562,58	143,02	145,93
Stabilized / thickened sludge concetration Stabilizovana / uguščena koncentracija mulja	Xi	2,50%	2,50%	2,50%	2,50%	2,50%	2,50%
Stabilized / thickened sludge flow Stabilizovan / uguščen protok mulja	ΔPr	11,12 m3/d	11,25	22,24	22,50	5,72	5,84
Dimensions : **Dimenzije:**							
Number of tanks Broj rezervoara	N	1	1	1	1	1	1
Diameter Prečnik	D	5,0 m	5,0	5,0	5,0	5,0	5,0
Sludge height Visina mulja	Hs	3,1 m	3,1	3,1	3,1	3,1	3,1
Tank surface Površina rezervoara	S	19,63 m2	19,63	19,63	19,63	19,63	19,63
Effective tank volume Efektivna zapremina rezervoara	Vef	60,84 m3	60,84	60,84	60,84	60,84	60,84
Retention time Vrijeme zadržavanja	t	5,5 d	5,4	2,7	2,7	10.6	10,4

3/12/18
GEORGIOS KARKANIAS
PRESIDENT

Sludge mechanical dewatering unit
Objekat za mehaničku dehidrataciju mulja

		1st STAGE 1. FAZA 6000 PE Summer Ljeto	1st STAGE I. FAZA 6000 Winter Zima	2nd STAGE 2. FAZA 12000 Summer Ljeto	2nd STAGE 2. FAZA 12000 Winter Zima	Start up Početak 3900 Summer Ljeto	Start up Početak 3900 Winter Zima
Stabilized / thickened sludge quantity Stabilizovana / ugušćena količina mulja	ΔPy	278,00 Kg/d	281,29	555,99	562,58	143,02	145,93
Stabilized / thickened sludge concetration Stabilizovana / ugušćena koncentracija mulja	Xi	2,5%	2,5%	2,5%	2,5%	2,5%	2,5%
Stabilized / thickened sludge flow Stabilizovan / ugušćen protok mulja	ΔPr	11,12 m3/d	11,25	22,24	22,50	5,72	5,84
Minimum final dry matter content Minimalni sadržaj konačne suve materije	Xo	23,0%	23,0%	23,0%	23,0%	23,0%	23,0%
Recovery Oporavak	α	95,00%	95,00%	95,00%	95,00%	95,00%	95,00%
Sludge quantity for dewatering Količina mulja za dehidrataciju	ΔPy	278,00 Kg/d	281,29	555,99	562,58	143,02	145,93
Dewatered sludge quantity Dehidratirana količina mulja	ΔPz	264,10 Kg/d	267,23	528,19	534,45	135,87	138,63
Dewatered sludge flow Dehidratirani protok mulja		1,15 m3/d	1,16	2,30	2,32	0,59	0,60
Drainage flow Protok drenaže		9,97 m3/d	10,09	19,94	20,18	5,13	5,23
Daily operation time Dnevno vrijeme rada		5 hr	5	5	5	5	5
Weekly operation time Sedmično vrijeme rada		5 d	5	10	10	5	5
Sludge production (operation time 25h per week) Proizvodnja mulja (vrijeme rada 25 sati sedmično)		77,84 Kg/hr	78,76	77,84	78,76	40,05	40,86
Sludge production (operation time 25h per week) Proizvodnja mulja (vrijeme rada 25 sati sedmično)		3,11 m3/hr	3,15	3,11	3,15	1,60	1,63
Number of decanters Broj dekantera	n	1	1	1	1	1	1
Demanded decanter capacity Potrebni kapacitet dekantera		3,11 m3/hr	3,15	3,11	3,15	1,60	1,63
Polyelectrolyte dosage Doza polielektrolita		10,00 gr/Kg SS	10,00	10,00	10,00	10,00	10,00
Total polyelectrolyte quantity Ukupna količina polielektrolita		778,39 gr/hr	787,62	778,39	787,62	400,47	408,60
Maximum daily polyelectrolyte quantity Maksimalna dnevna količina polielektrolita		3,89 Kg/d	3,94	3,89	3,94	2,00	2,04
Polyelectrolyte solution concentration Koncentracija rastvora polielektrolita		2,00 gr/l	2,00	2,00	2,00	2,00	2,00
Total polyelectrolyte flow Ukupni protok polielektrolita		389,20 l/hr	393,81	389,20	393,81	200,23	204,30
Pumps number (in operation) Broj pumpi (u upotrebi)		1	1	1	1	1	1
Demanded pump flow Potrebni protok pumpi		389,20 l/hr	393,81	389,20	393,81	200,23	204,30
Demanded daily polyelectrolyte quantity Potrebna dnevna količina polielektrolita		1945,98 lt/d	1969,04	1945,98	1969,04	1001,17	1021,51

3/12/18

GEORGIOS KARKANIAS
PRESIDENT

3/12/18

5 - DRAWINGS

Please find drawings in Folder III

KARKANIAS ENVIRONMENTAL TECHNOLOGY S.A.
INDUSTRIAL AREA OF LARISA - GREECE
POSTAL CODE 41004, BOX 3053
TEL.: +30 2410 541386 - FAX: +30 2410 541354
Email: info@karkanias.gr
TAX NUMBER: 095244711
REGISTRATION NUMBER: 48779/31/B/01/12

3/12/18
GEORGIOS KARKANIAS
PRESIDENT

3/12/18

Drawings/contents- Sadržaj/Crteži

	Drawing/Crtež	No/Br	scale/ razmjera
1	General Layout/Generalna Situacija	A0	1:2000
2	Layout/Situacija	A_1	1:200
3	Hydraulic Profiles/Hidraulični profili	H_1	1:150
4	P & I	P_1	-
5	Inlet and overflow manhole/Ulivna I prelivna sahta	M_1	1:50
6	Septage unit/Septazna jedinica	M_2	1:50
7	Pumping Station/Pumpna Stanica	M_3	1:50
8	Mechanical wastewater pretreatment unit/Uredaj za mehanički predtretman otpadnih voda	M_4	1:50
9	Flow distribution Chamber I/ Komora I za distribuciju protoka	M_5	1:50
10	Predenitrification Tank/ Bazen za pre-denitrifikaciju	M_6	1:75
11	Circulated activated sludge tank/Cirkulacioni bazen za aktivni mulj	M_7	1:100
12	Flow distribution Chamber II/ Komora II za distribuciju protoka	M_8	1:50
13	Final settling tank/ Bazen za finalno taloženje	M_9	1:50
14	Filtration unit/ Filtraciona jedinica	M_{10}	1:50
15	UV disinfection unit-effluent-chemical phosphorus precipitation-service eater unit/uv dezinfekciona jedinica-hemijska fosforna precipitacija jedinica za servisnu vodu	M_{11}	1:50
16	Return activated sludge and excess sludge pumping station/ pumpna stanica za povratni aktivni mulj I višak molja	M_{12}	1:75
17	Sludge aerobic stabilisation and thickening tank/ Bazen za aerobnu stabilizaciju mulja I ugušćivanje	M_{13}	1:100
18	Sludge holding tank/Bazen za mulj	M_{14}	1:50
19	Sludge mechanical dewatering building/Zgrada za mehaničku dehidrataciju mulja	$M_{15.1}$	1:75
20	Sludge mechanical dewatering building/Zgrada za mehaničku dehidrataciju mulja	$M_{15.2}$	1:75
21	Blower house with switch room/Zgrada za duvaljke sa kontrolnom sobom	M_{16}	1:75
22	Transformer station buiding/Transfostanica	M_{17}	1:50
23	Garaze I/ Garaža I	M_{18}	1:75
24	Garaze II/ Garaža II	M_{19}	1:75
25	Operation building / Upravna zgrada	M_{20}	1:100
26	Dewatered sludge storage site/ Skladište za dehidrirani mulj	M_{21}	1:125

3/12 178

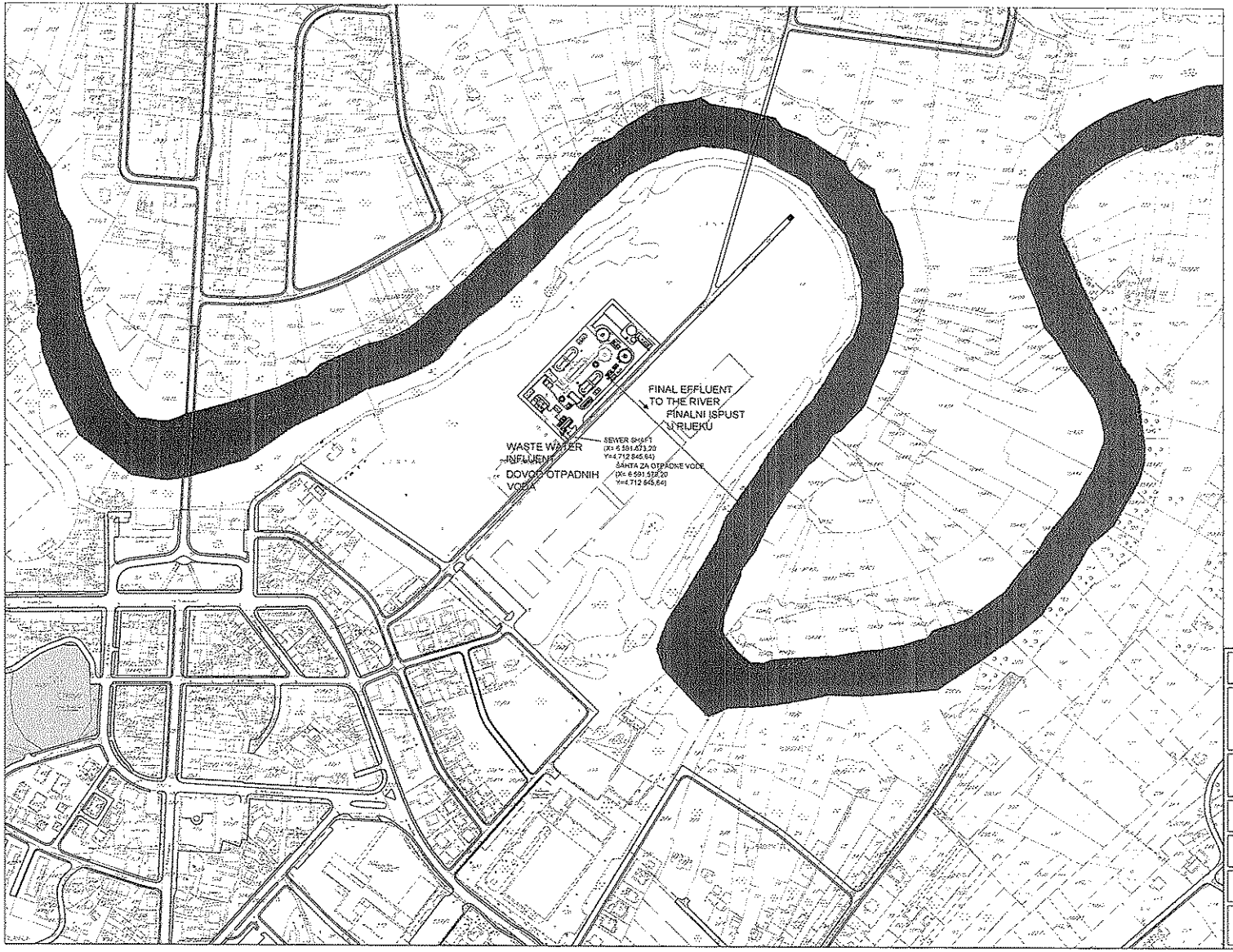

WWTP STAGE 1 / PPOV FAZA 1

WWTP STAGE 2 / PPOV FAZA 2

WWTP FUTURE EXTENSION (STAGE 3) - PPOV
PROŠIRENJE U BUDUĆNOSTI (FAZA 3)

EMPLOYER INVESTITOR	D.O.O. "Vodovod i kanalizacija" Danilovgrad
TENDERER: PONUDAČ:	KARKANIAS ENVIRONMENTAL TECHNOLOGY S.A. Industrial Area of Larissa | Postal Code: 41004 | Box: 3053 | Larissa, Greece Phone: +30 2410541385 E-mail: tsmiko@karkanias.gr | www.karkanias.gr
TENDER:	Danilovgrad Municipal Infrastructure Project Construction of Wastewater Plant Danilovgradski opštinski Infrastrukturni projekat Izgradnja postrojenja za prečišćavanje otpadnih voda
TENDER IDENTIFICATION TENDERSKA IDENTIFIKACIJA:	EBRD ME DAN 9000
Subject : Naslov :	**Technical Proposal** **Tehnička Ponuda**
Date : Datum :	25th OCTOBER 2017 25.10.2017.
SCALE : RAZMJERA :	1:2000
Drawing: Crtež:	**General Layout** **Generalna Situacija**
No : Br :	**A0**

3/12/18

LEGEND

1. INLET AND OVERFLOW MANHOLE
   a. inlet chamber
   b. grated inlet
   c. overflow chamber
   d. parshall channel
   e. gravel containers
2. SEPTAGE UNIT
   a. Pre screening
   b. septage tank
   c. septage building
   d. container for screenings and gravels
3. PUMPING STATION
   a. automatic coarse screen
   b. manual cleaned coarse screen
   c. pumping station tank stage 1
   d. pumping station tank stage 2
   e. container for screenings
4. MECHANICAL WASTEWATER PRETREATMENT UNIT
   a. compact mechanical pretreatment unit stage 1
   b. compact mechanical pretreatment unit stage 2
   c. containers for screenings and sand stage 1
   d. containers for screenings and sand stage 2
5.1 FLOW DISTRIBUTION CHAMBER I
5.2 PREDENITRIFICATION TANK
   a. tank stage 1
   b. tank stage 2
5.3 CIRCULATED ACTIVATED SLUDGE TANK
   a. tank stage 1
   b. tank stage 2
   c. blower house
   d. switch room
5.4 FLOW DISTRIBUTION CHAMBER II
5.5 FINAL SETTLING TANK
   a. tank stage 1
   b. tank stage 2
5.6 RETURN ACTIVATED SLUDGE AND EXCESS SLUDGE PUMPING STATION
   a. pumping station stage 1
   b. pumping station stage 2
5.7 CHEMICAL PHOSPHORUS PRECIPITATION
   a. equipment room
   b. reservoir place (basin)
6. FILTRATION UNIT
   a. stage 1
   b. stage 2
7. UV DISINFECTION UNIT-EFFLUENT
   a. channel UV stage 1
   b. channel UV stage 2
   c. parshall channel
   d. space for automatic sampling station
8.1 SLUDGE AEROBIC STABILISATION AND THICKENING TANK
8.2 SLUDGE HOLDING TANK
8.3 SLUDGE MECHANICAL DEWATERING BUILDING
   a. space for screw sludge pumps
   b. space for dewatering sludge equipment stage 1
   c. space for the equipment (added within stage 2)
   d. switch room
   e. containers for dewatered sludge
   f. dewatered sludge storage site
9. SERVICE WATER UNIT
   a. service water tank
   b. room for automatic pressure station
10. TRANSFORMER STATION BUILDING
   a. medium Voltage switchboard room
   b. transformer room
   c. low voltage room distribution switchboard room
11. OPERATION BUILDING
12. GARAGE I (for the trucks)
13. GARAGE II
   a. parking room
   b. back power supply unit

LEGENDA

1. ULIVNA I PRELIVNA SANTA
   a. ulivna komora
   b. ttuhkastav
   c. prelivna šahta
   d. parshall-ov kanal
   e. spremnici za šljunak
2. SEPTIK
   a. automatsko sitanje
   b. septik
   c. septik zgrada
   d. spremnik za krupan otpadak i šljunak
3. PUMPNA STANICA
   a. automatsko grubo sito
   b. grubo sito sa manualnim čišćenjem
   c. rezervoar za pumpnu stanicu faza 1
   d. rezervoar za pumpnu stanicu faza 2
   e. spremnik krupan otpad
4. UREĐAJ ZA MEHANIČKI PREDTRETMAN OTPADNIH VODA
   a. kompaktni uređaj za mehanički predtretman faza 1
   b. kompaktni uređaj za mehanički predtretman faza 1
   c. spremnici za krupan otpad i pesak faza 1
   d. spremnici za krupan otpad i pesak faza 1
5.1 KOMORA I ZA DISTRIBUCIJU PROTOKA
5.2 BAZEN ZA PRE-DENITRIFIKACIJU
   a. bazen faza 1
   b. bazen faza 2
5.3 CIRKULACIONI BAZENI ZA AKTIVNI MULJ
   a. rezervoar faza 1
   b. rezervoar faza 2
   c. objekat za produvavanje
   d. komandna soba
5.4 KOMORA II ZA DISTRIBUCIJU PROTOKA
5.5 BAZENI ZA FINALNO TALOŽENJE
   a. bazen faza 1
   b. bazen faza 2
5.6 PUMPNA STANICA ZA POVRATNI AKTIVNI MULJ I VIŠAK MULJA
   a. pumpna stanica faza 1
   b. pumpna stanica faza 2
5.7 HEMIJSKA FOSFORNA PRECIPITACIJA
   a. prostorija za opremu
   b. mesto za rezervoar (bazen)
6. JEDINICA ZA FILTRACIJU
   a. faza 1
   b. faza 2
7. UV DEZINFEKCIONA JEDINICA - IZLAZNA VODA uređaja
   a. UV kanal faza 1
   b. UV kanal faza 2
   c. parshall-ov kanal
   d. stanica za automatsko uzimanje uzoraka
8.1 BAZENI ZA AEROBNU STABILIZACIJU MULJA I UGUŠĆIVANJE
8.2 BAZENI ZA MULJ
8.3 ZGRADA ZA MEHANIČKU DEHIDRATACIJU MULJA
   a. prostor za pužne pumpe za mulj
   b. prostor za opremu za dehidrataciju mulja faza 1
   c. prostor za opremu (dodatna za fazu 2)
   d. kontrolna soba
   e. spremnik za dehidrirani mulj
   f. odlagalište za dehidrirani mulj
9. JEDINICA ZA SERVISNU VODU
   a. servisni rezervoar za vodu
   b. prostorija za stanicu za automatski pritisak
10. TRAFOSTANICA
   a. prostorija za razvodnu tablu srednjeg napona
   b. prostorija transformatora
   c. prostorija za razvodnu tablu niskog napona
11. UPRAVNA ZGRADA
12. GARAŽA I (za kamione)
13. GARAŽA II
   a. parking
   b. prostorija za rezervno napajanje

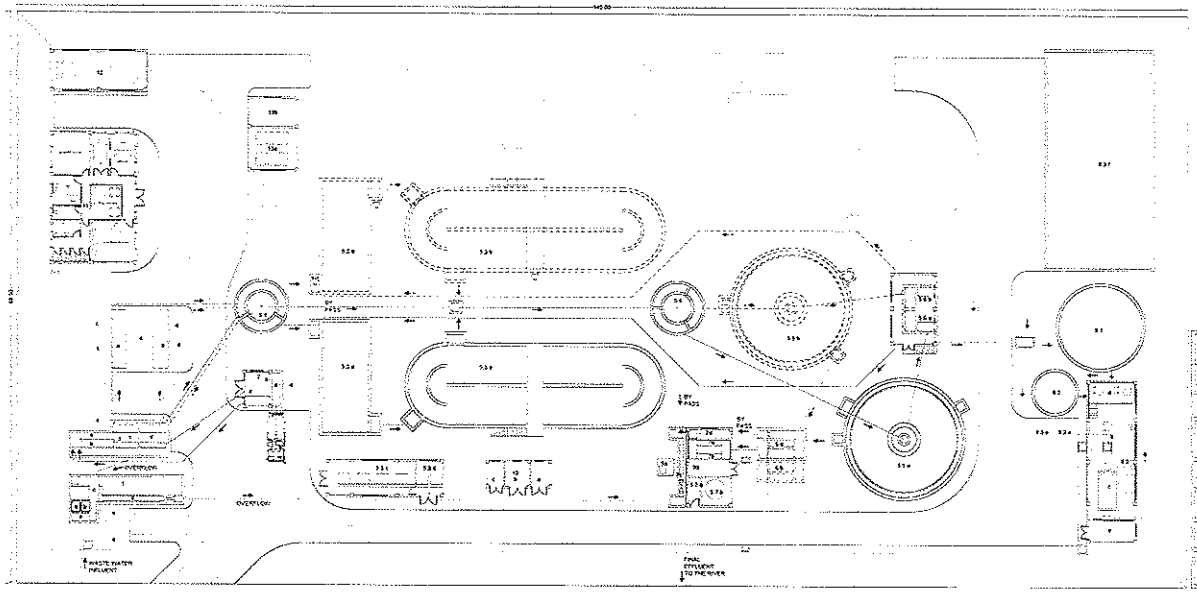

WWTP STAGE 1/ PPOV FAZA 1
WWTP STAGE 2/PPOV FAZA 2
WWTP FUTEISRE EXTENSION (STAGE 3 ›
/ PPOV PROŠIRENJE U BUDUĆNOSTI FAZA 3›

WASTE WATERLINE STAGE 1 / KOLEKTOR ZA OTPADNE VODE FAZA 1
WASTE WATERLINE STAGE 2 / KOLEKTOR ZA OTPADNE VODE FAZA 2
RETURN SLUDGELINE STAGE 1 / KOLEKTOR ZA POVRATNI MULJ FAZA 1
RETURN SLUDGELINE STAGE 2 / KOLEKTOR ZA POVRATNI MULJ FAZA 2
EXCESS SLUDGELINE STAGE 1 / KOLEKTOR ZA VIŠAK MULJA FAZA 1
EXCESS SLUDGELINE STAGE 2 / KOLEKTOR ZA VIŠAK MULJA FAZA 2

FINAL AVERAGE SURFACE LEVEL +40.40
FINALNA SREDNJA KOTA TERENA +40.40

EMPLOYER, INVESTITOR: D.O.O. "Vodovod i Kanalizacija" Danilovgrad

TENDERER, PONUĐAČ: KARKANIAS ENVIRONMENTAL TECHNOLOGY S.A.
Industrial Area of Larissa | Postal Code: 41004
box: 3020 | Larissa, Greece
Phone: +30 2410341356
E-mail: karkanias@karkanias.gr
www.karkanias.gr

TENDER: Danilovgrad Municipal Infrastructure Project
Construction of Wastewater Plant
Danilovgradski opštinski Infrastrukturni projekat
Izgradnja postrojenja za prečišćavanje otpadnih voda

TENDER IDENTIFICATION / TEHNIČKA IDENTIFIKACIJA: ERFD HE DAN 9000

SUBJECT / Naslov: Technical Proposal
Tehnička Ponuda

Date / Datum: 25th SEPTEMBER 2017
25.10.2017.

SCALE / RAZMJERA: 1:200

Drawing / Crtež: Layout
Situacija

No / Br.: A1

3/12/18

HYDRAULIC PROFILE - SLUDGE

HIDRAULIČNI PROFIL - MULJ

HYDRAULIC PROFILE - SEPTAGE

HIDRAULIČKI PROFIL - SEPTIKA

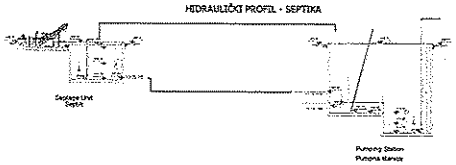

HYDRAULIC PROFILE - BY PASS PIPING

HIDRAULIČNI PROFIL - BAJPAS CIJEVOVOD

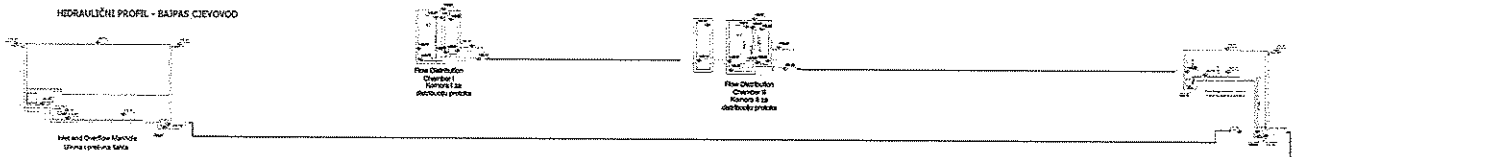

HYDRAULIC PROFILE - SEWAGE

HIDRAULIČNI PROFIL - OTPADNE VODE

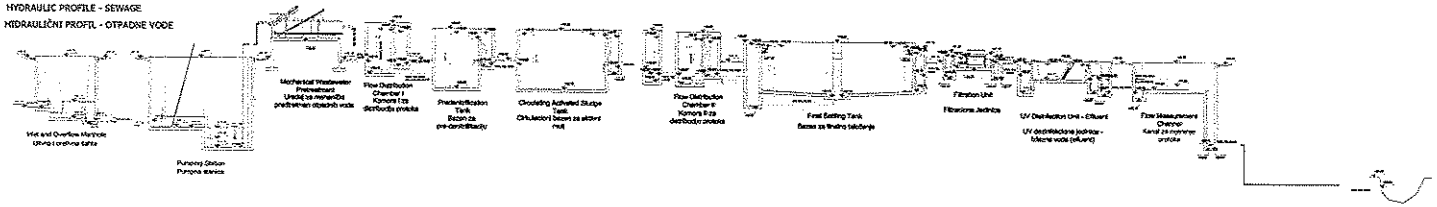

EMPLOYER: INVESTITOR:	D.O.O. "Vodovod i kanalizacija" Danilovgrad
TENDERER: PONUĐAČ:	KARKANIAS ENVIRONMENTAL TECHNOLOGY S.A.
TENDER:	Danilovgrad Municipal Infrastructure Project Construction of Wastewater Plant Danilovgradski opštinski infrastrukturni projekat Izgradnja postrojenja za prečišćavanje otpadnih voda
TENDER DOCUMENTATION: TENDERSKA DOKUMENTACIJA:	ESPD ME DAN 0000
Subject: Naslov:	Technical Proposal Tehnička Ponuda
Date: Datum:	14th SEPTEMBER 2017 14.10.2017.
SCALE: RAZMJERA:	1:150
Drawing: Crtež:	Hydraulic Profiles Hidraulični profili
No: Br.:	H1

3/12/18

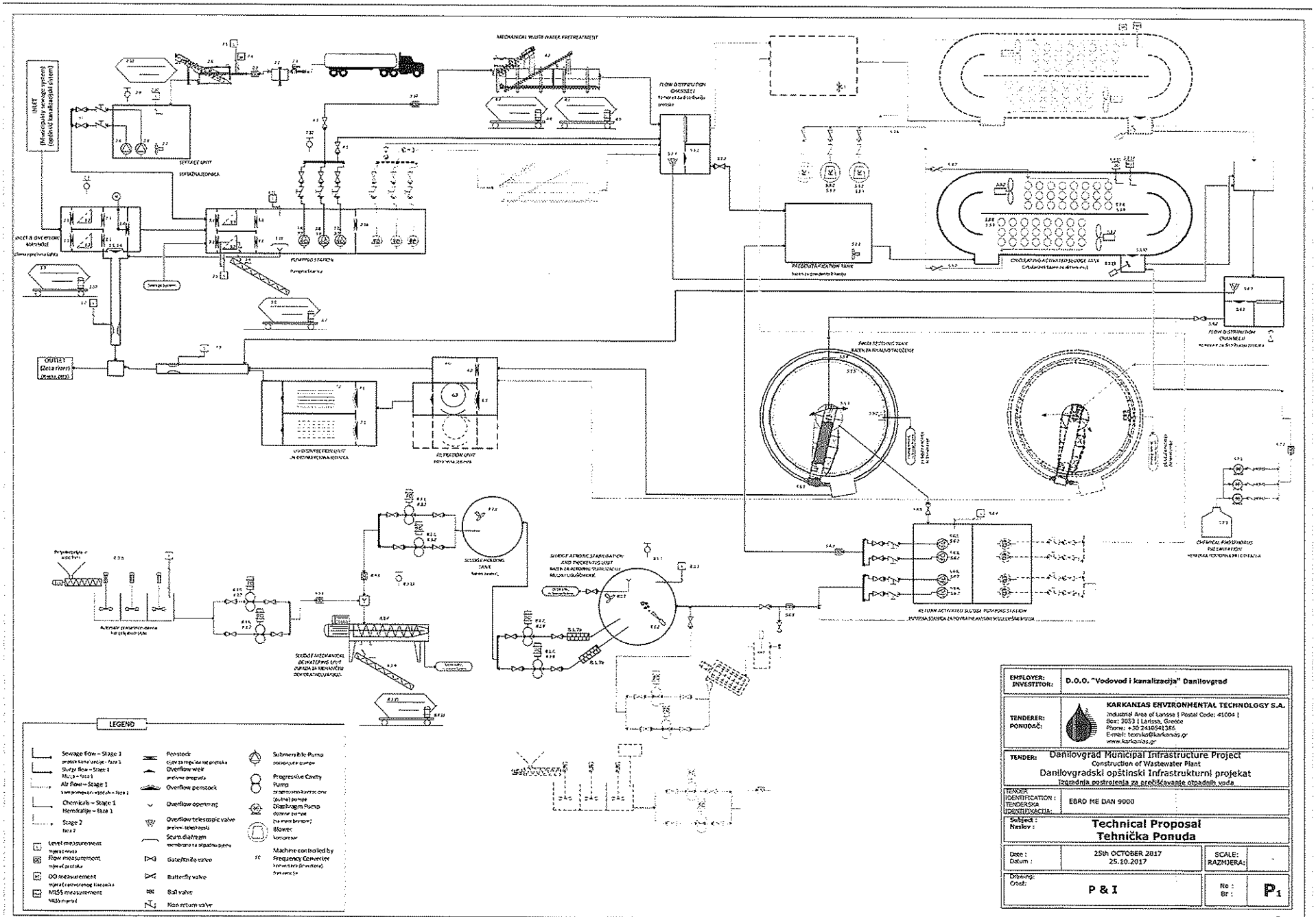

EMPLOYER: INVESTITOR:	D.O.O. "Vodovod i kanalizacija" Danilovgrad
TENDERER: PONUĐAČ:	KARKANIAS ENVIRONMENTAL TECHNOLOGY S.A. Industrial Area of Larissa | Postal Code: 41004 | Box: 3053 | Larissa, Greece Phone: +30 2410541386 E-mail: tenders@karkanias.gr www.karkanias.gr
TENDER:	Danilovgrad Municipal Infrastructure Project Construction of Wastewater Plant Danilovgradski opštinski Infrastrukturni projekat Izgradnja postrojenja za pročišćavanje otpadnih voda
TENDER IDENTIFICATION: TENDERSKA IDENTIFIKACIJA:	EBRD ME DAN 9000
Subject: Naslov:	**Technical Proposal** **Tehnička Ponuda**
Date: Datum:	25th OCTOBER 2017 25.10.2017
SCALE: RAZMJERA:	-
Drawing: Crtež:	**P & I**
No: Br:	**P1**

3/12/18

B-B (1 : 75)

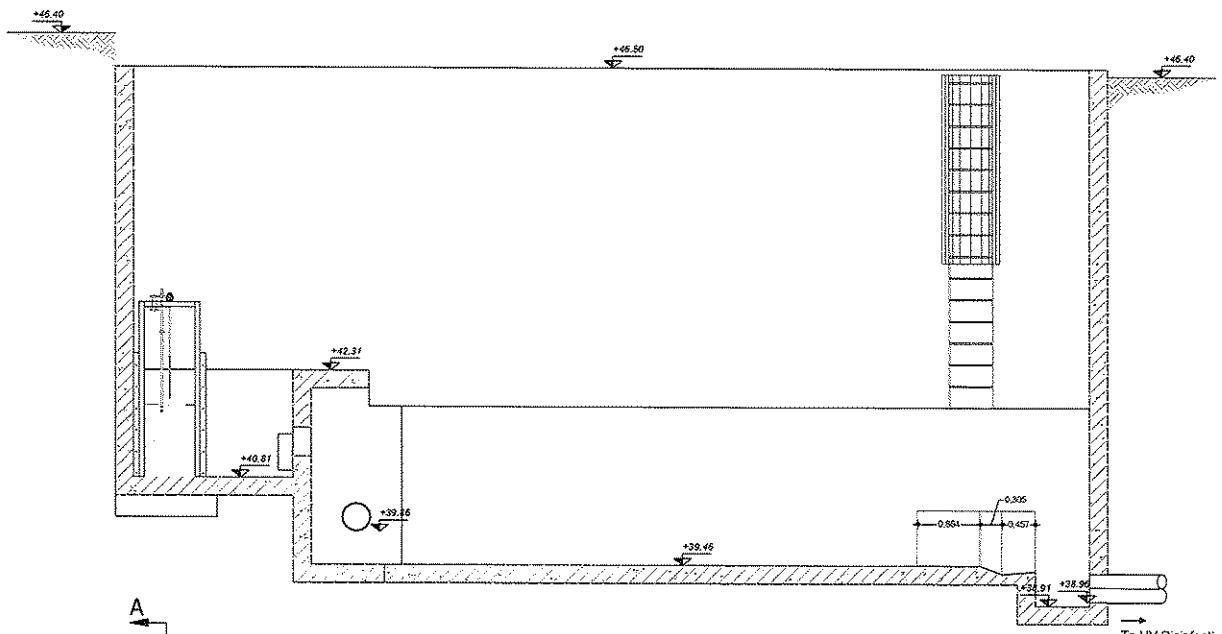

To UV Disinfection Unit - Effluent (parshall channel)

To UV dezinfekciona jedinica - izlazna voda (efluent) (parshall-ov kanal)

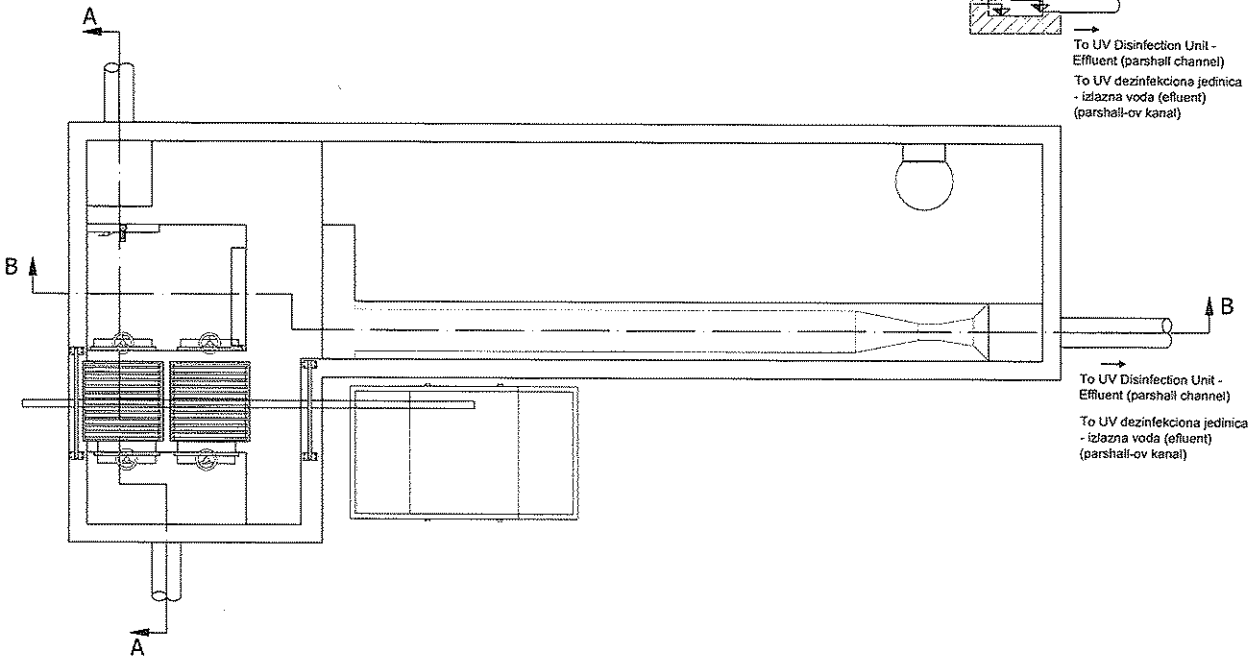

To UV Disinfection Unit - Effluent (parshall channel)

To UV dezinfekciona jedinica - izlazna voda (efluent) (parshall-ov kanal)

A-A (1 : 75)

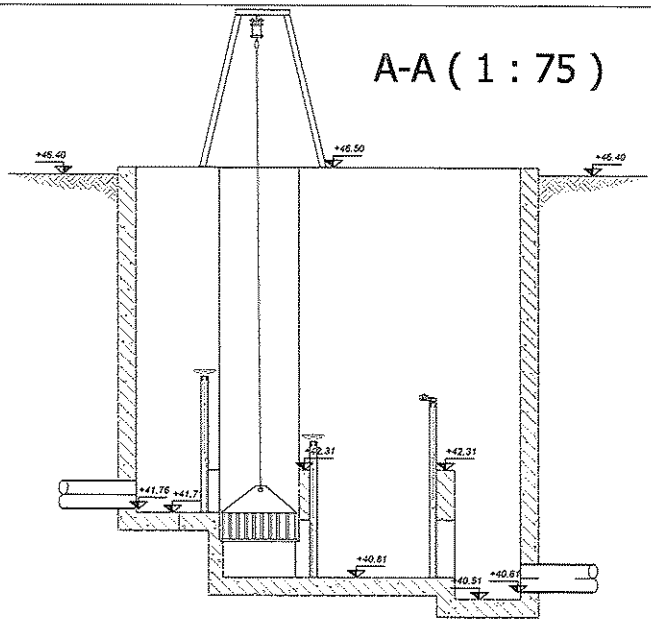

EMPLOYER: INVESTITOR:	**D.O.O. "Vodovod i kanalizacija" Danilovgrad**
TENDERER: PONUĐAČ:	**KARKANIAS ENVIRONMENTAL TECHNOLOGY S.A.** Industrial Area of Larissa | Postal Code: 41004 | Box: 3053 | Larissa, Greece Phone: +30 2410541386 E-mail: texniko@karkanias.gr | www.karkanias.gr
TENDER :	Danilovgrad Municipal Infrastructure Project Construction of Wastewater Plant Danilovgradski opštinski Infrastrukturni projekat Izgradnja postrojenja za prečišćavanje otpadnih voda
TENDER IDENTIFICATION : TENDERSKA IDENTIFIKACIJA:	EBRD ME DAN 9000
Subject : Naslov :	**Technical Proposal** **Tehnička Ponuda**
Date : Datum :	25th OCTOBER 2017 25.10.2017.
SCALE : RAZMJERA :	1:50
Drawing: Crtež:	**Inlet and overflow manhole** **Ulivna i prelivna šahta**
No : Br :	**M1**

3/12/18

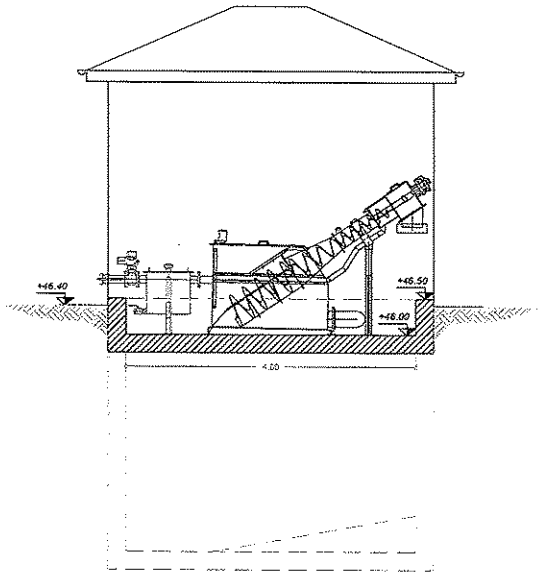

SECTION A-A
PRESJEK A-A

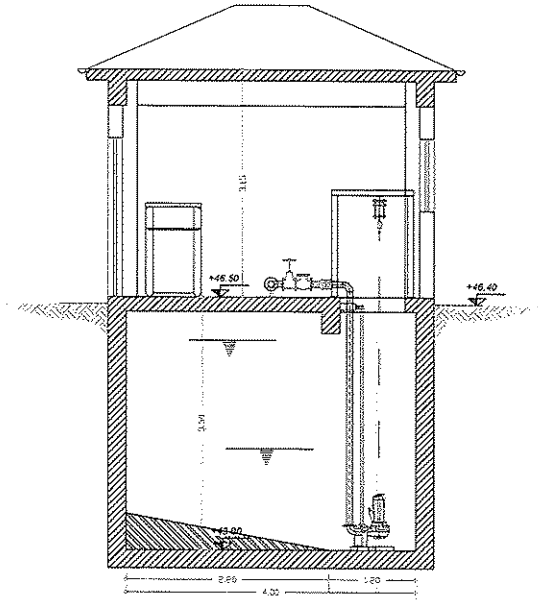

SECTION B-B
PRESJEK B-B

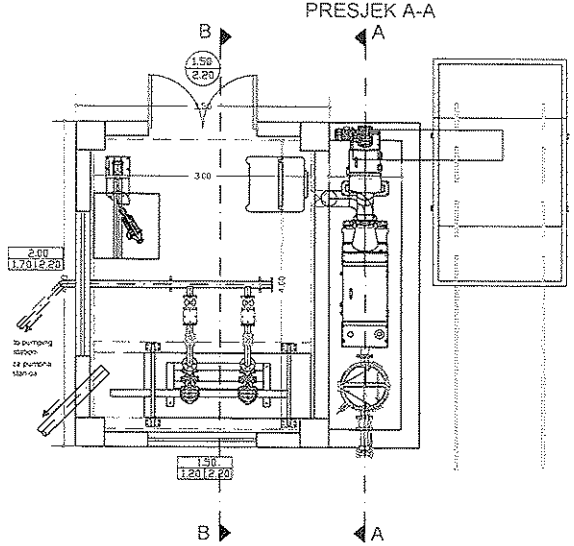

PLAN VIEW
OSNOVA

EMPLOYER: **INVESTITOR:**	**D.O.O. "Vodovod i kanalizacija" Danilovgrad**
TENDERER: **PONUĐAČ:**	**KARKANIAS ENVIRONMENTAL TECHNOLOGY S.A.** Industrial Area of Larissa | Postal Code: 41004 | Box: 3053 | Larissa, Greece Phone: +30 2410541386 E-mail: texniko@karkanias.gr | www.karkanias.gr
TENDER :	Danilovgrad Municipal Infrastructure Project Construction of Wastewater Plant Danilovgradski opštinski Infrastrukturni projekat Izgradnja postrojenja za prečišćavanje otpadnih voda
TENDER IDENTIFICATION : TENDERSKA IDENTIFIKACIJA:	EBRD ME DAN 9000
Subject : **Naslov :**	**Technical Proposal** **Tehnička Ponuda**
Date : Datum :	25th OCTOBER 2017 25.10.2017.
SCALE : RAZMJERA :	1:50
Drawing: Crtež:	**SEPTAGE UNIT** **SEPTAŽNA JEDINICA**
No : Br :	**M2**

3/12/18

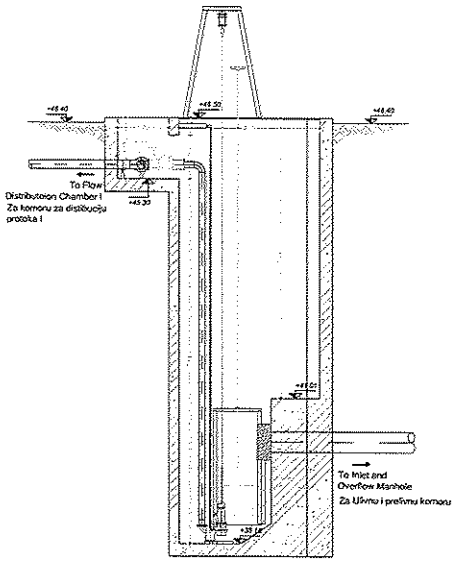

SECTION B-B
PRESJEK B-B

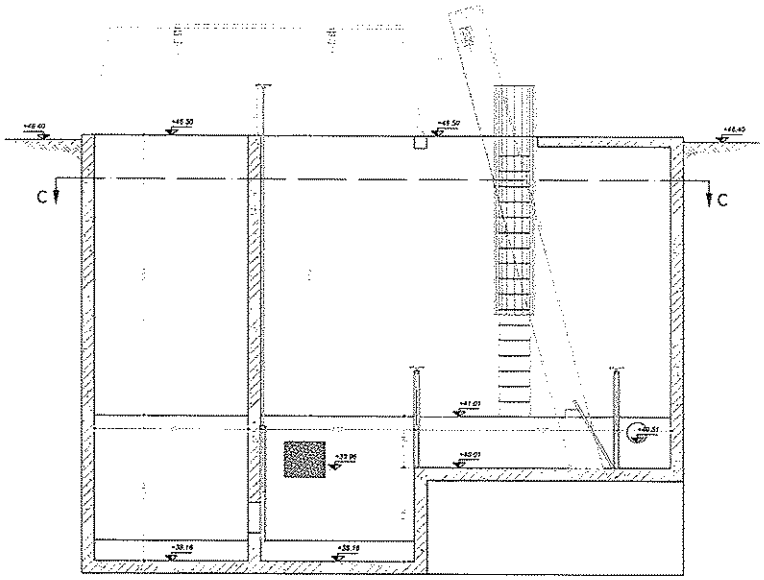

SECTION A-A
PRESJEK A-A

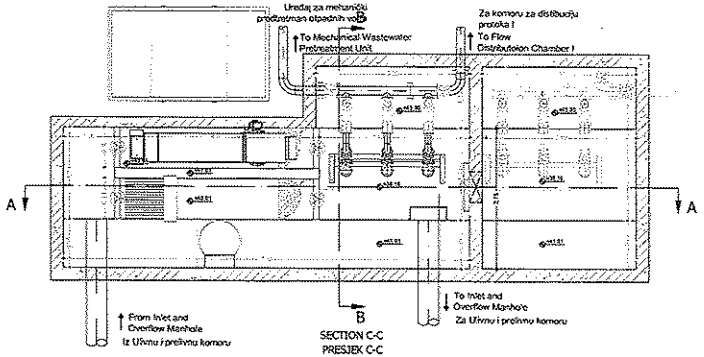

SECTION C-C
PRESJEK C-C

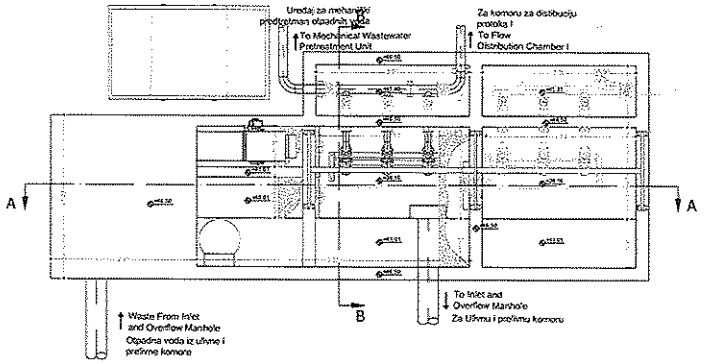

EMPLOYER: INVESTITOR:	D.O.O. "Vodovod i kanalizacija" Danilovgrad
TENDERER: PONUDAČ:	KARKANIAS ENVIRONMENTAL TECHNOLOGY S.A. Industrial Area of Larissa | Postal Code: 41004 | Box: 3053 | Larissa, Greece Phone: +30 2410541386 E-mail: texniko@karkanias.gr | www.karkanias.gr
TENDER :	Danilovgrad Municipal Infrastructure Project Construction of Wastewater Plant Danilovgradski opštinski Infrastrukturni projekat Izgradnja postrojenja za prečišćavanje otpadnih voda
TENDER IDENTIFICATION TENDERSKA IDENTIFIKACIJA:	EBRD ME DAN 9000
Subject : Naslov :	**Technical Proposal** **Tehnička Ponuda**
Date : Datum :	25th OCTOBER 2017 25.10.2017.
SCALE : RAZMJERA :	1:50
Drawing: Crtež:	**Pumping Station** **Pumpna Stanica**
No : Br :	**M3**

3/92/18-E

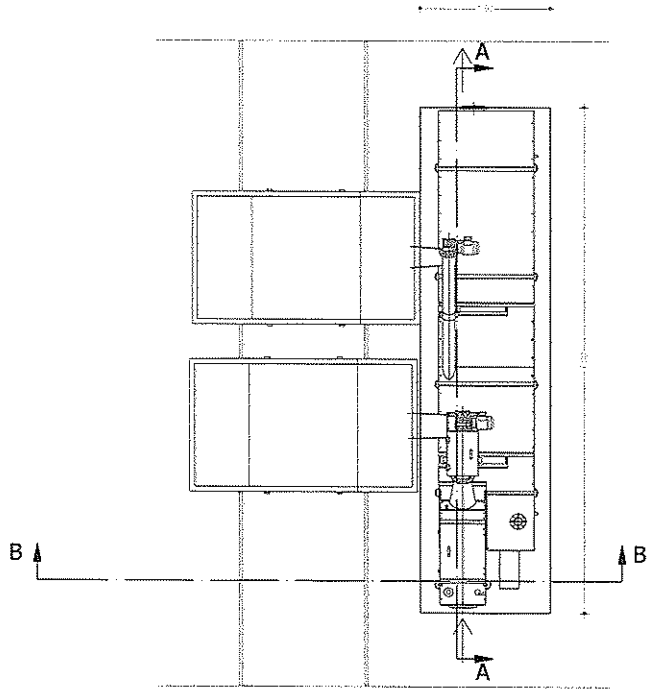

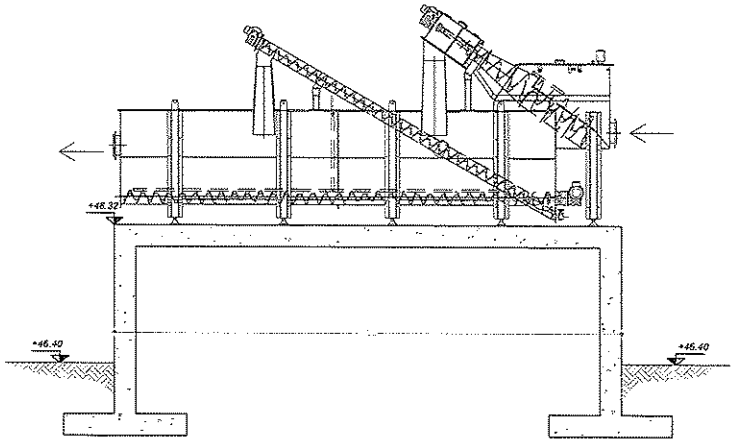

PRESJEK A-A
SECTION A-A

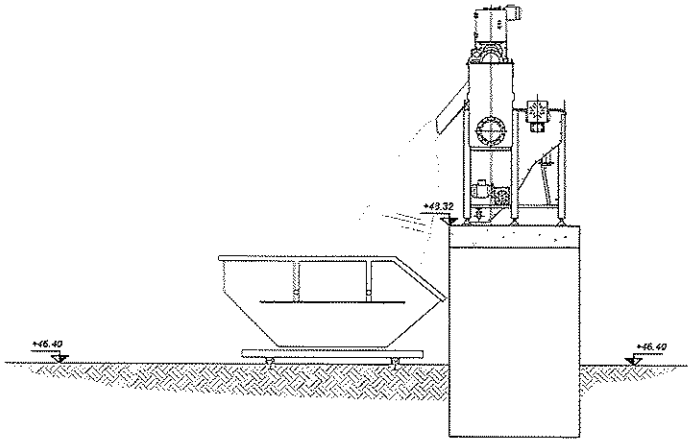

SECTION B-B
PRESJEK B-B

EMPLOYER: **INVESTITOR:**	**D.O.O. "Vodovod i kanalizacija" Danilovgrad**
TENDERER: **PONUĐAČ:**	**KARKANIAS ENVIRONMENTAL TECHNOLOGY S.A.** Industrial Area of Larissa | Postal Code: 41004 | Box: 3053 | Larissa, Greece Phone: +30 2410541386 E-mail: texniko@karkanias.gr | www.karkanias.gr
TENDER :	Danilovgrad Municipal Infrastructure Project Construction of Wastewater Plant Danilovgradski opštinski Infrastrukturni projekat Izgradnja postrojenja za prečišćavanje otpadnih voda
TENDER IDENTIFICATION : TENDERSKA IDENTIFIKACIJA:	EBRD ME DAN 9000
Subject : **Naslov :**	**Technical Proposal** **Tehnička Ponuda**
Date : Datum :	25th OCTOBER 2017 25.10.2017.
SCALE : RAZMJERA :	1:50
Drawing: Crtež:	**Mechanical wastewater pretreatment unit** **Uređaj za mehanički predtretman otpadnih voda**
No : Br :	**M4**

3/12/18

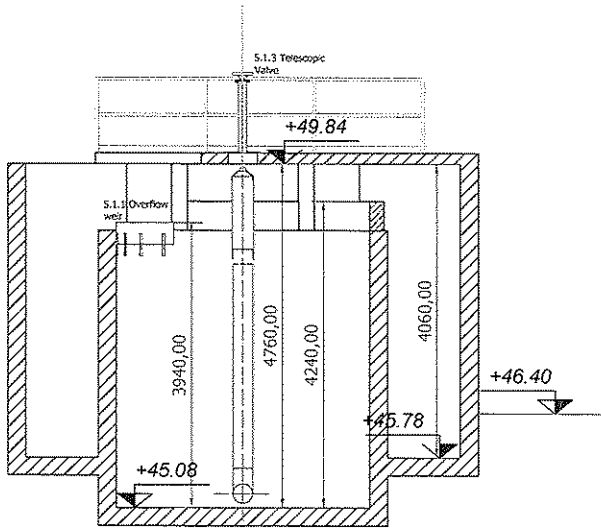

A-A (1 : 50)

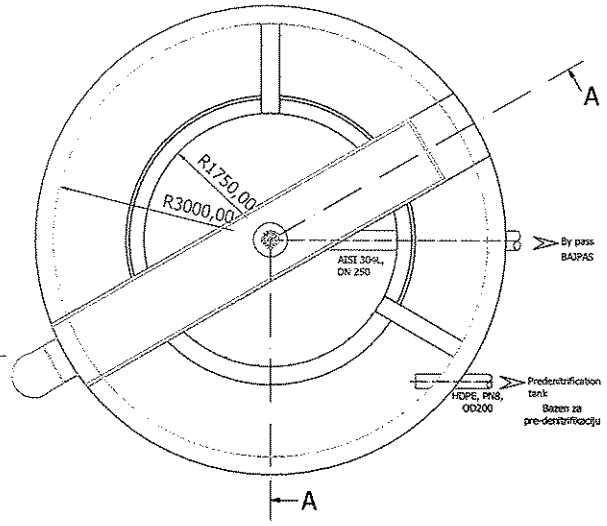

Flow Distribution Chamber I

Komora I za distribuciju protoka

EMPLOYER: INVESTITOR:	**D.O.O. "Vodovod i kanalizacija" Danilovgrad**
TENDERER: PONUĐAČ:	**KARKANIAS ENVIRONMENTAL TECHNOLOGY S.A.** Industrial Area of Larissa | Postal Code: 41004 | Box: 3053 | Larissa, Greece Phone: +30 2410541386 E-mail: texniko@karkanias.gr | www.karkanias.gr
TENDER :	Danilovgrad Municipal Infrastructure Project Construction of Wastewater Plant Danilovgradski opštinski Infrastrukturni projekat Izgradnja postrojenja za prečišćavanje otpadnih voda
TENDER IDENTIFICATION : TENDERSKA IDENTIFIKACIJA:	EBRD ME DAN 9000
Subject : Naslov :	**Technical Proposal** **Tehnička Ponuda**
Date : Datum :	25th OCTOBER 2017 25.10.2017.
SCALE : RAZMJERA :	1:50
Drawing: Crtež:	**Flow Distribution Chamber I** **Komora I za distribuciju protoka**
No : Br :	**M5**

3/12/18 E

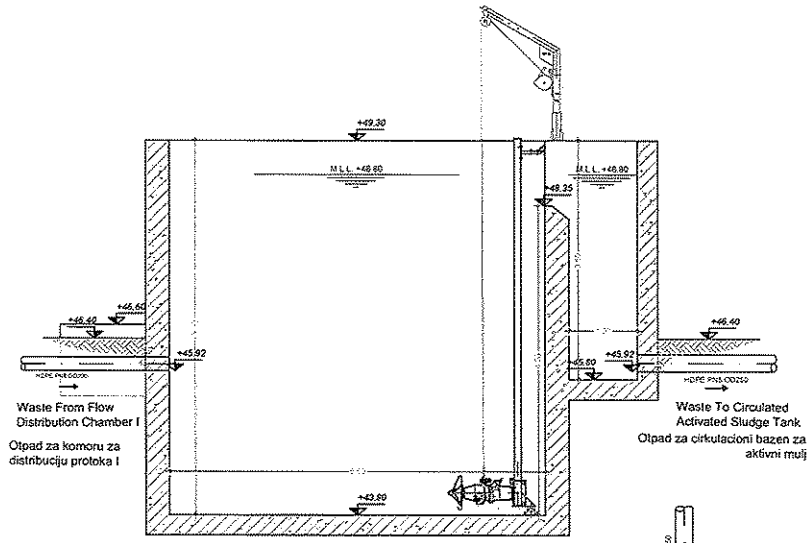

SECTION A-A
PRESJEK A-A

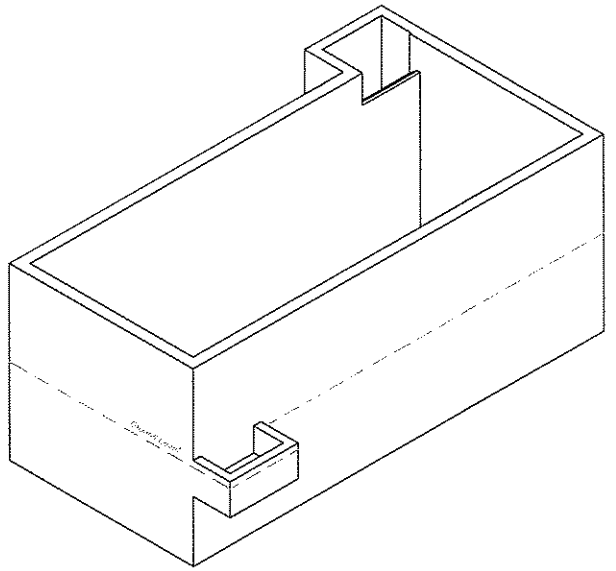

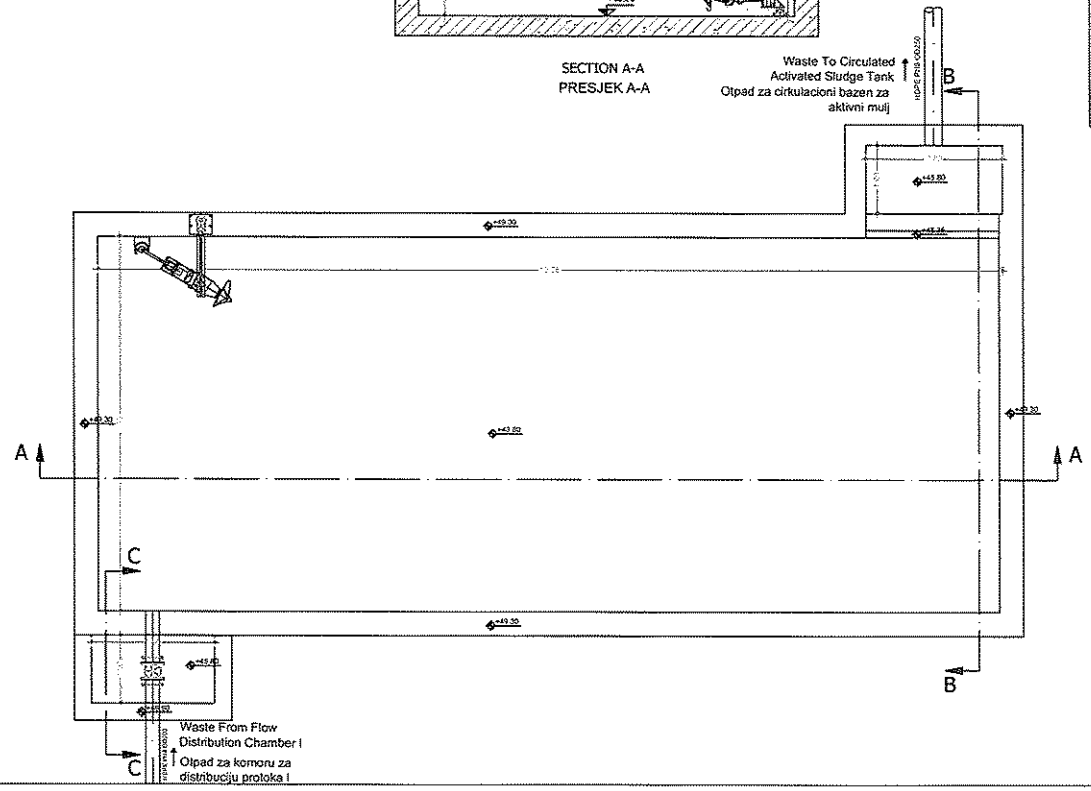

EMPLOYER: INVESTITOR:	**D.O.O. "Vodovod i kanalizacija" Danilovgrad**
TENDERER: PONUĐAČ:	**KARKANIAS ENVIRONMENTAL TECHNOLOGY S.A.** Industrial Area of Larissa | Postal Code: 41004 | Box: 3053 | Larissa, Greece Phone: +30 2410541386 E-mail: texniko@karkanias.gr | www.karkanias.gr
TENDER :	Danilovgrad Municipal Infrastructure Project Construction of Wastewater Plant Danilovgradski opštinski Infrastrukturni projekat Izgradnja postrojenja za prečišćavanje otpadnih voda
TENDER IDENTIFICATION : TENDERSKA IDENTIFIKACIJA:	EBRD ME DAN 9000
Subject : Naslov :	**Technical Proposal** **Tehnička Ponuda**
Date : Datum :	25th OCTOBER 2017 25.10.2017.
SCALE : RAZMJERA :	1:75
Drawing: Crtež:	**Predenitrification Tank** **Bazen za pre-denitrifikaciju**
No : Br :	**M6**

3/12/18 e

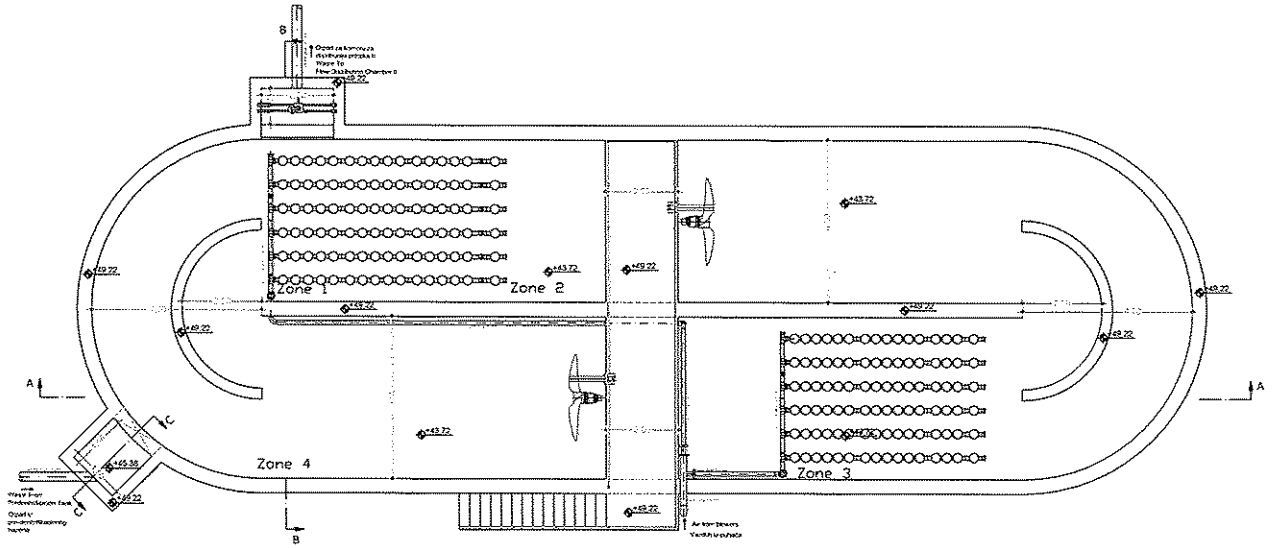

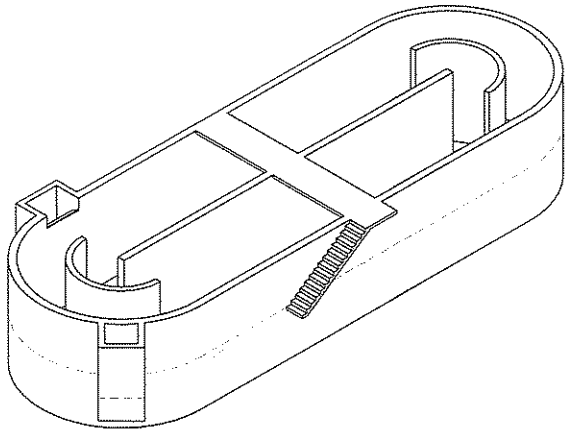

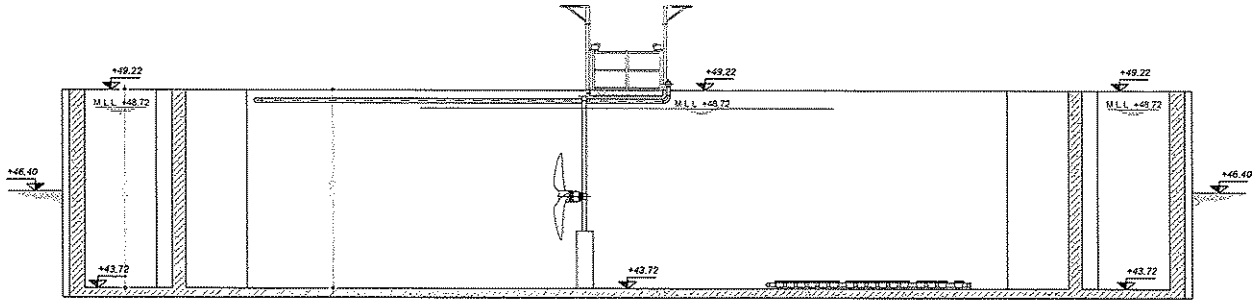

SECTION A-A
PRESJEK A-A

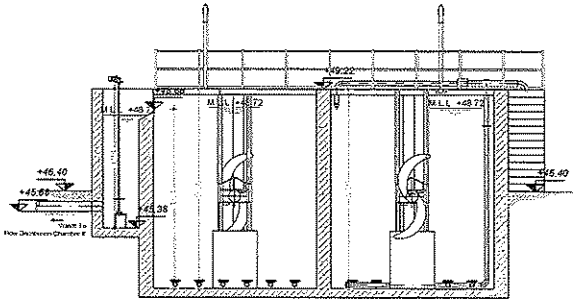

SECTION B-B
PRESJEK B-B

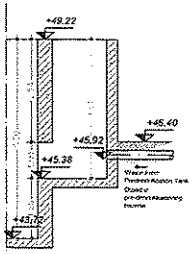

SECTION C-C
PRESJEK C-C

EMPLOYER: **INVESTITOR:**	**D.O.O. "Vodovod i kanalizacija" Danilovgrad**
TENDERER: **PONUĐAČ:**	**KARKANIAS ENVIRONMENTAL TECHNOLOGY S.A.** Industrial Area of Larissa | Postal Code: 41004 | Box: 3053 | Larissa, Greece Phone: +30 2410541386 E-mail: texniko@karkanias.gr | www.karkanias.gr
TENDER :	Danilovgrad Municipal Infrastructure Project Construction of Wastewater Plant Danilovgradski opštinski Infrastrukturni projekat Izgradnja postrojenja za prečišćavanje otpadnih voda
TENDER IDENTIFICATION : TENDERSKA IDENTIFIKACIJA:	EBRD ME DAN 9000
Subject : **Naslov :**	**Technical Proposal** **Tehnička Ponuda**
Date : Datum :	25th OCTOBER 2017 25.10.2017.
SCALE : RAZMJERA :	1:100
Drawing: Crtež:	**Circulated Activated Sludge Tank** **Cirkulacioni bazen za aktivni mulj**
No : Br :	**M7**

3/12/18

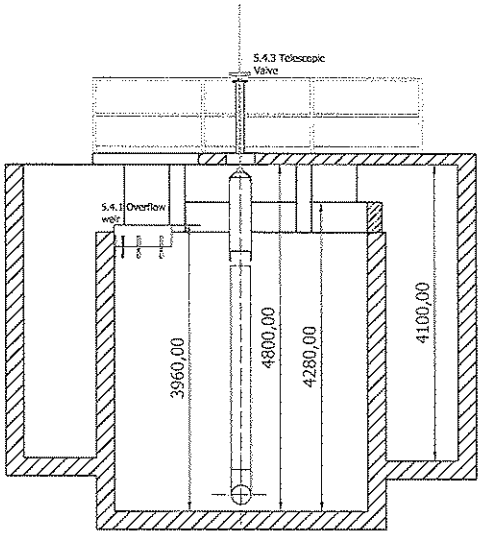

A-A (1 : 50)

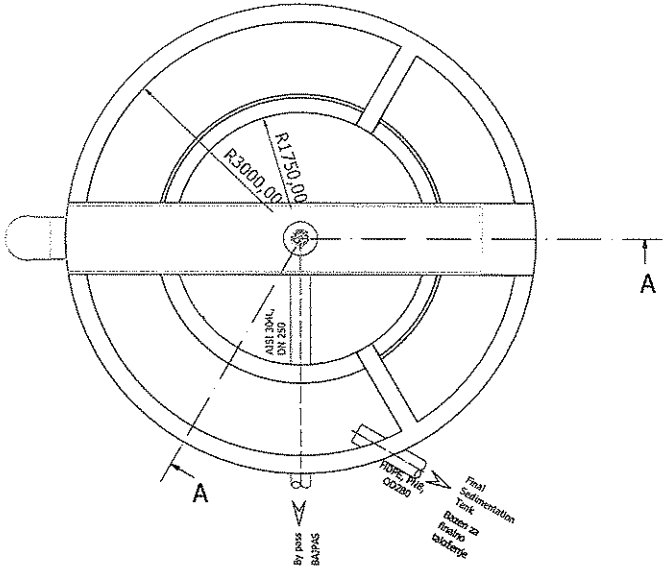

Flow Distribution Chamber II
Komora II za distribuciju protoka

EMPLOYER: INVESTITOR:	D.O.O. "Vodovod i kanalizacija" Danilovgrad
TENDERER: PONUĐAČ:	KARKANIAS ENVIRONMENTAL TECHNOLOGY S.A. Industrial Area of Larissa | Postal Code: 41004 | Box: 3053 | Larissa, Greece Phone: +30 2410541386 E-mail: texniko@karkanias.gr | www.karkanias.gr
TENDER :	Danilovgrad Municipal Infrastructure Project Construction of Wastewater Plant Danilovgradski opštinski Infrastrukturni projekat Izgradnja postrojenja za prečišćavanje otpadnih voda
TENDER IDENTIFICATION: TENDERSKA IDENTIFIKACIJA:	EBRD ME DAN 9000
Subject : Naslov :	**Technical Proposal** **Tehnička Ponuda**
Date : Datum :	25th OCTOBER 2017 25.10.2017.
SCALE : RAZMJERA:	1:50
Drawing: Crtež:	**Flow Distribution Chamber II** **Komora II za distribuciju protoka**
No : Br :	**M8**

3/12/18 €

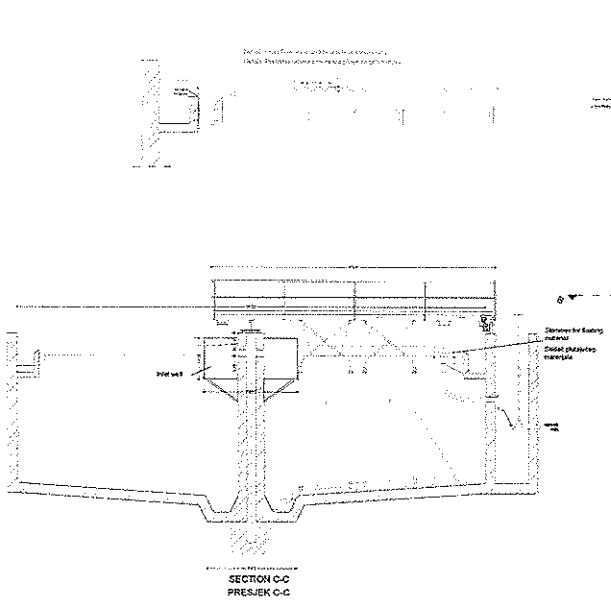

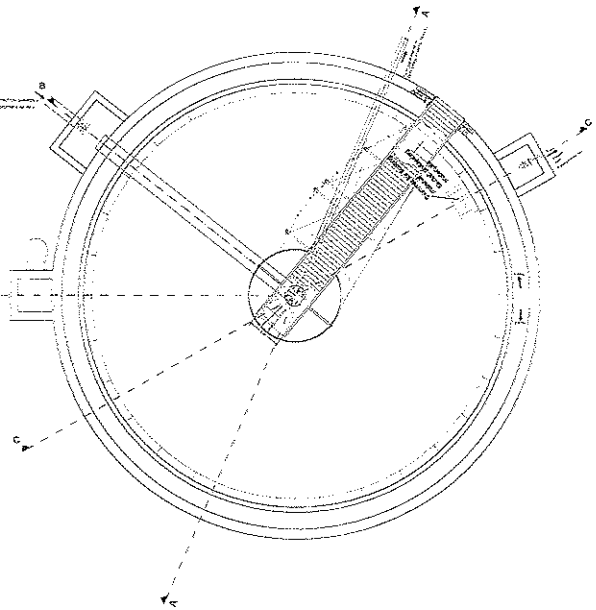

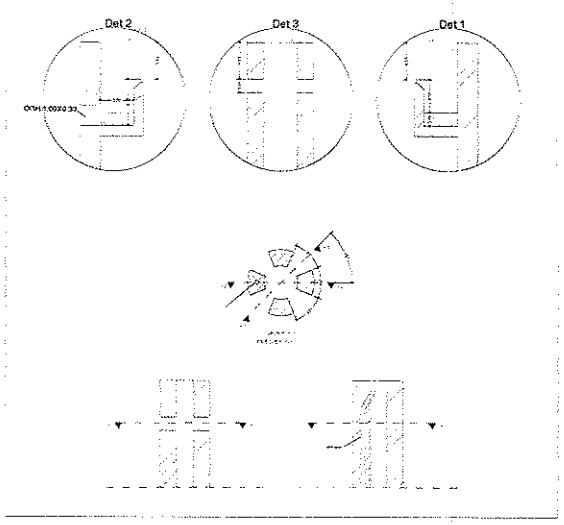

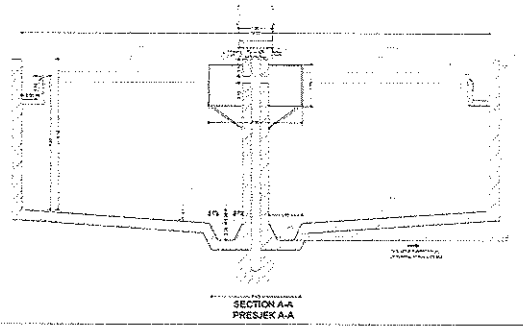

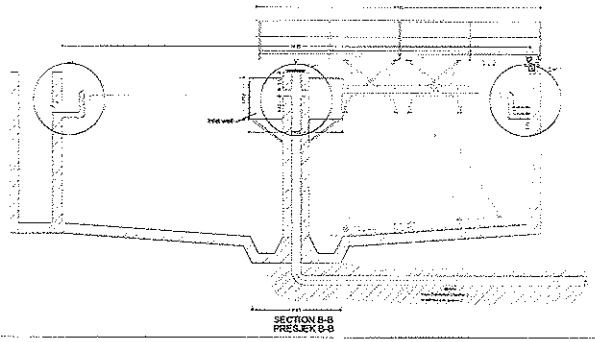

EMPLOYER: INVESTITOR:	D.O.O. "Vodovod i kanalizacija" Danilovgrad
TENDERER: PONUDAC:	KARKAMBAS ENVIRONMENTAL TECHNOLOGY S.A. Industrial Area of Lamia | Postal Code: 35004 Box: 3033 | Lamia, Greece Phone: +30 2231051800 E-mail: lamia@karkambas.gr | www.karkambas.gr
TENDER:	Danilovgrad Municipal Infrastructure Project Construction of Wastewater Plant Danilovgradski opštinski infrastrukturni projekat Izgradnja postrojenja za prečišćavanje otpadnih voda
TENDER IDENTIFICATION / TENDERSKA OZNAČENOST:	EBRD ME DAN 9000
Subject: Naziv:	Technical Proposal Tehnička Ponuda
Date: Datum:	25th OCTOBER 2017 25.10.2017
SCALE: RAZMJERA:	1:50
Drawing: Crtež:	FINAL SETTLING TANK BAZEN ZA FINALNO TALOŽENJE
No: Br:	M9

3/12/18

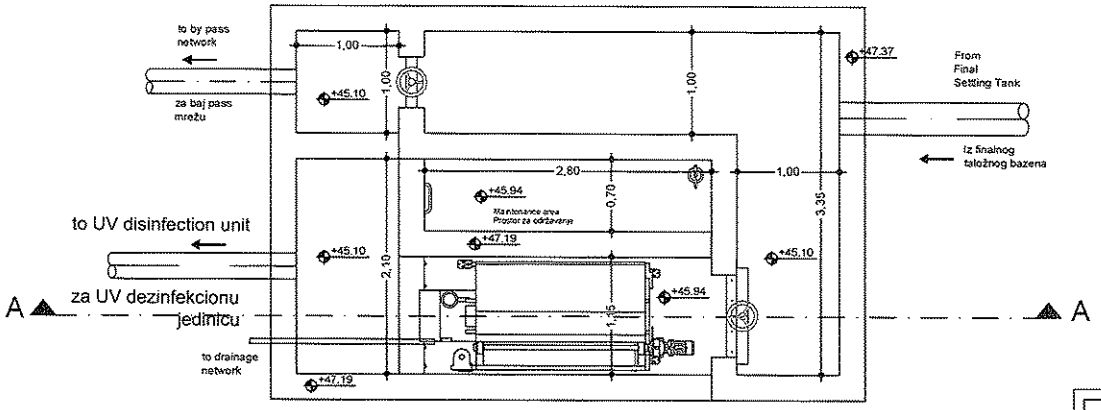

PLAN VIEW
OSNOVA

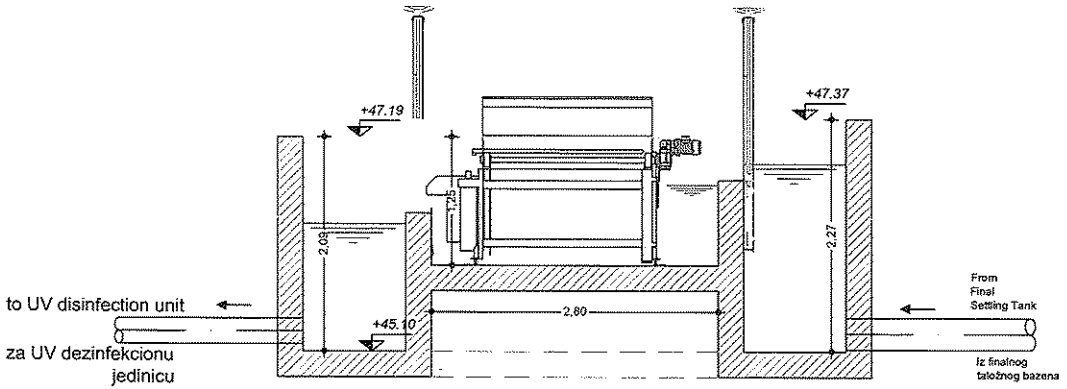

SECTION A-A
PRESJEK A-A

EMPLOYER: **INVESTITOR:**	**D.O.O. "Vodovod i kanalizacija" Danilovgrad**
TENDERER: **PONUĐAČ:**	**KARKANIAS ENVIRONMENTAL TECHNOLOGY S.A.** Industrial Area of Larissa | Postal Code: 41004 | Box: 3053 | Larissa, Greece Phone: +30 2410541386 E-mail: texniko@karkanias.gr | www.karkanias.gr
TENDER :	Danilovgrad Municipal Infrastructure Project Construction of Wastewater Plant Danilovgradski opštinski Infrastrukturni projekat Izgradnja postrojenja za prečišćavanje otpadnih voda
TENDER IDENTIFICATION : TENDERSKA IDENTIFIKACIJA:	EBRD ME DAN 9000
Subject : **Naslov :**	**Technical Proposal** **Tehnička Ponuda**
Date : Datum :	25th OCTOBER 2017 25.10.2017.
SCALE : RAZMJERA :	1:50
Drawing: Crtež:	**Filtration Unit** **Filtraciona jedinica**
No : Br :	**M10**

3172178

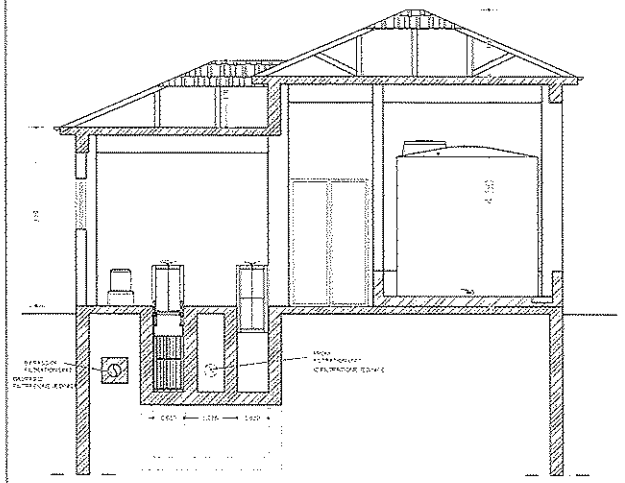

SECTION A-A
PRESJEK A-A

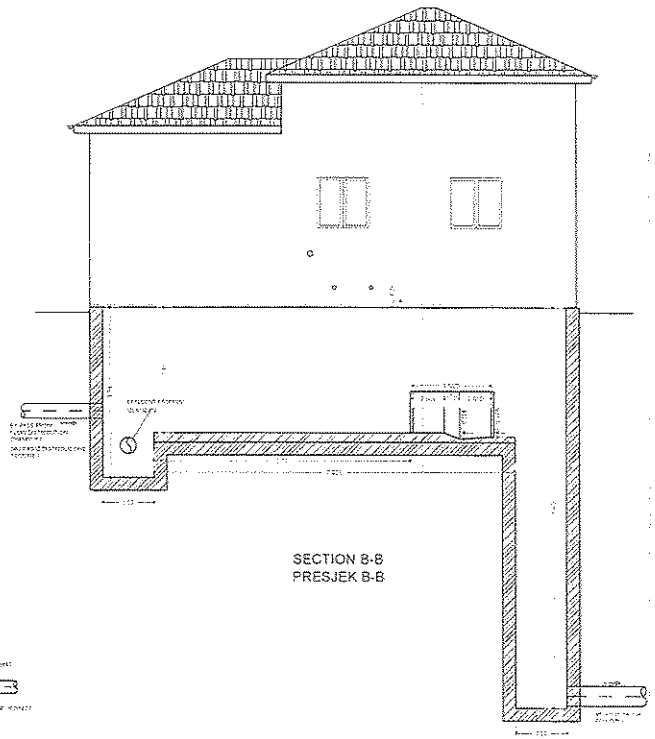

SECTION B-B
PRESJEK B-B

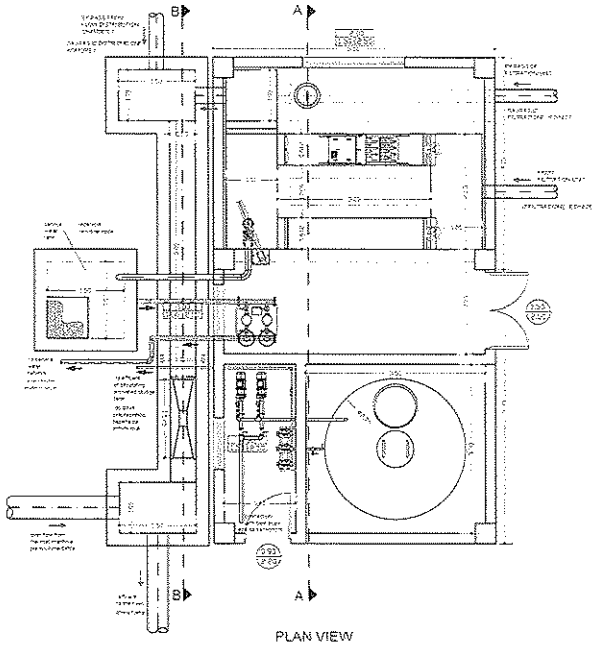

PLAN VIEW
OSNOVA

EMPLOYER: INVESTITOR:	D.O.O. "Vodovod i kanalizacija" Danilovgrad
TENDERER: PONUĐAČ:	KARKANIAS ENVIRONMENTAL TECHNOLOGY S.A. Industrial Area of Larissa | Postal Code: 41004 | Box: 2053 | Larissa, Greece Phone: +30 2410541386 E-mail: texniko@karkanias.gr | www.karkanias.gr
TENDER :	Danilovgrad Municipal Infrastructure Project Construction of Wastewater Plant Danilovgradski opštinski Infrastrukturni projekat Izgradnja postrojenja za prečišćavanje otpadnih voda
TENDER IDENTIFICATION TENDERSKA IDENTIFIKACIJA:	EBRD ME DAN 9000
Subject : Nastav :	**Technical Proposal** **Tehnička Ponuda**
Date : Datum :	25th OCTOBER 2017 25.10.2017.
SCALE : RAZMJERA :	1:50
Drawing: Crtež:	UV DISSINFECTION UNIT- EFLUENT- CHEMICAL PHOSPHORUS PRECIPITATION- SERVICE WATER UNIT UV DEZINFEKCIONA JEDINICA - HEMIJSKA FOSFORNA PRECIPITACIJA - JEDINICA ZA SERVISNU VODU
No : Br :	M11

3/12/18 e

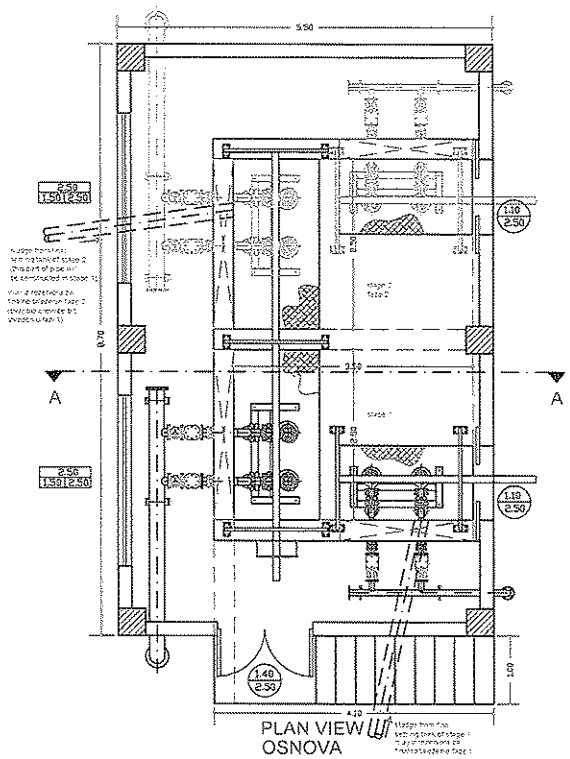

PLAN VIEW
OSNOVA

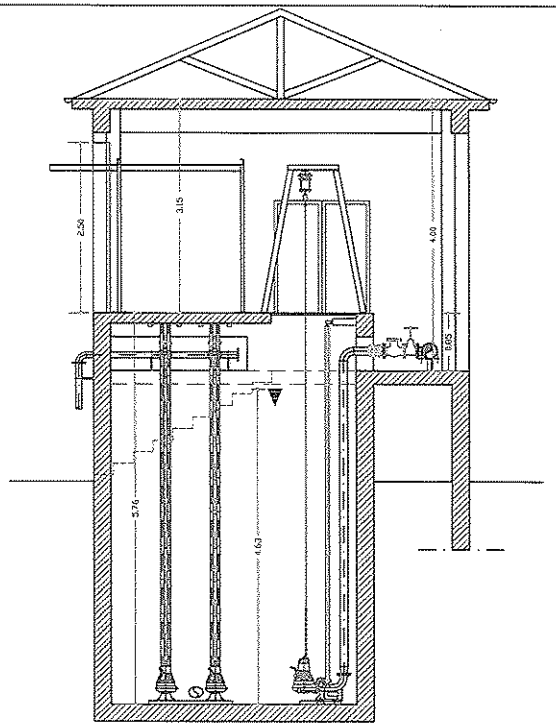

SECTION A-A
PRESJEK A-A

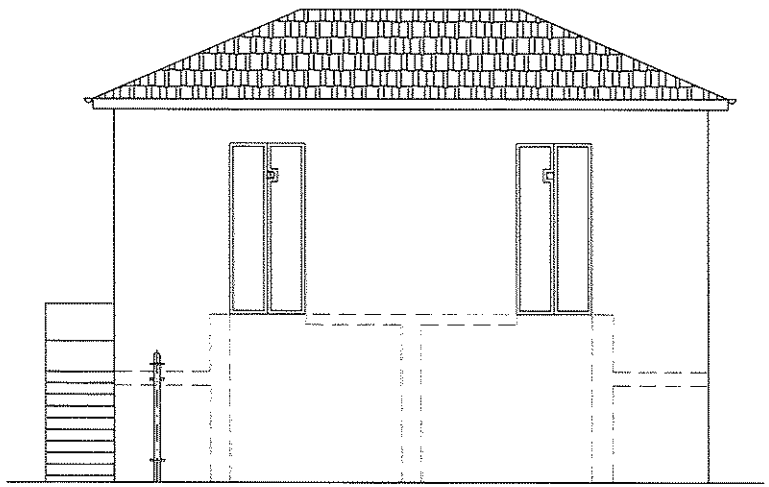

FRONT VIEW
IZGLED PREDNJE STRANE

EMPLOYER: **INVESTITOR:**	**D.O.O. "Vodovod i kanalizacija" Danilovgrad**
TENDERER: **PONUĐAČ:**	**KARKANIAS ENVIRONMENTAL TECHNOLOGY S.A.** Industrial Area of Larissa | Postal Code: 41004 | Box: 3053 | Larissa, Greece Phone: +30 2410541386 E-mail: texniko@karkanias.gr | www.karkanias.gr
TENDER :	Danilovgrad Municipal Infrastructure Project Construction of Wastewater Plant Danilovgradski opštinski Infrastrukturni projekat Izgradnja postrojenja za prečišćavanje otpadnih voda
TENDER IDENTIFICATION : TENDERSKA IDENTIFIKACIJA:	EBRD ME DAN 9000
Subject : **Naslov :**	**Technical Proposal** **Tehnička Ponuda**
Date : Datum :	25th OCTOBER 2017 25.10.2017.
SCALE : RAZMJERA :	1:75
Drawing: Crtež:	**RETURN ACTIVATED SLUDGE AND EXCESS SLUDGE PUMPING STATION** PUMPNA STANICA ZA POVRATNI AKTIVNI MULJ I VIŠAK MULJA
No : Br :	**M12**

3/12/18 e

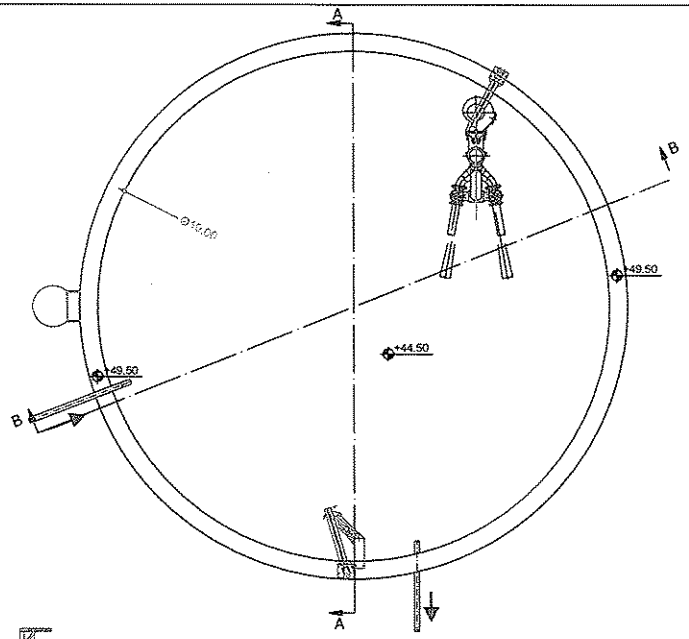

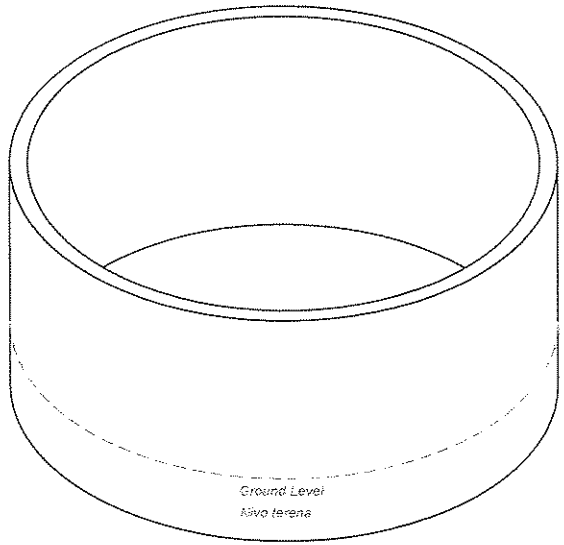

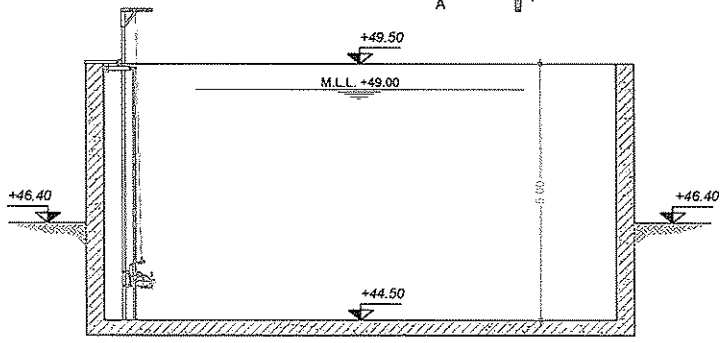

SECTION A-A
PRESJEK A-A

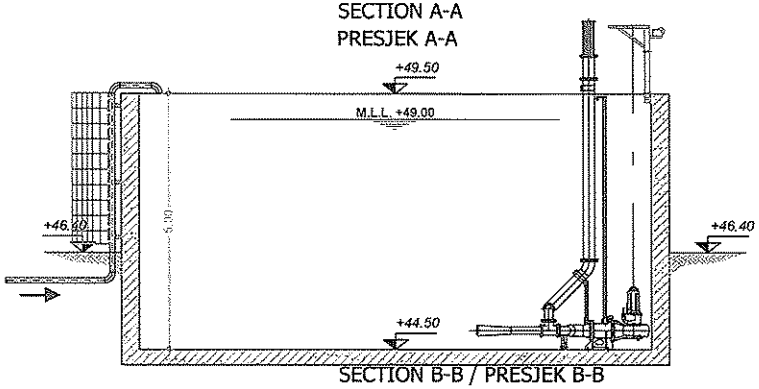

SECTION B-B / PRESJEK B-B

EMPLOYER: **INVESTITOR:**	**D.O.O. "Vodovod i kanalizacija" Danilovgrad**
TENDERER: **PONUĐAČ:**	**KARKANIAS ENVIRONMENTAL TECHNOLOGY S.A.** Industrial Area of Larissa | Postal Code: 41004 | Box: 3053 | Larissa, Greece Phone: +30 2410541386 E-mail: texniko@karkanias.gr | www.karkanias.gr
TENDER :	Danilovgrad Municipal Infrastructure Project Construction of Wastewater Plant Danilovgradski opštinski Infrastrukturni projekat Izgradnja postrojenja za prečišćavanje otpadnih voda
TENDER IDENTIFICATION : TENDERSKA IDENTIFIKACIJA:	EBRD ME DAN 9000
Subject : **Naslov :**	**Technical Proposal** **Tehnička Ponuda**
Date : Datum :	25th OCTOBER 2017 25.10.2017.
SCALE : RAZMJERA :	1:100
Drawing: Crtež: **Sludge Aerobic Stabilisation and Thickening Tank** **BAZEN ZA AEROBNU STABILIZACIJU MULJA I UGUŠĆIVANJE**	
No : Br :	**M13**

3/19418-E

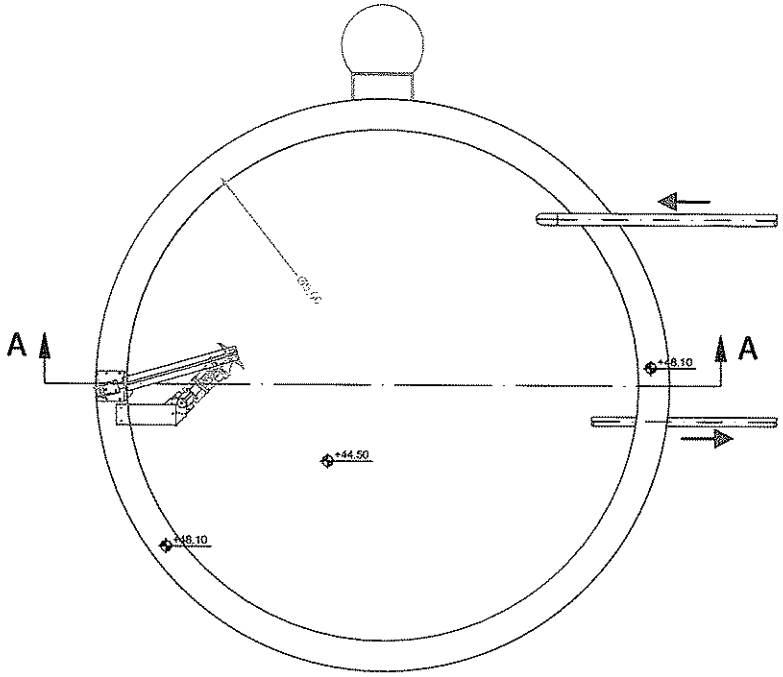

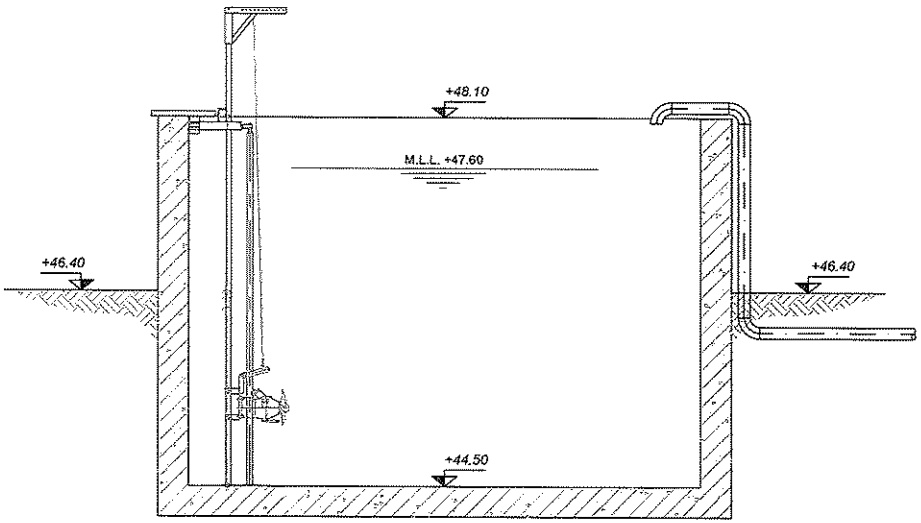

SECTION A-A / PRESJEK A-A

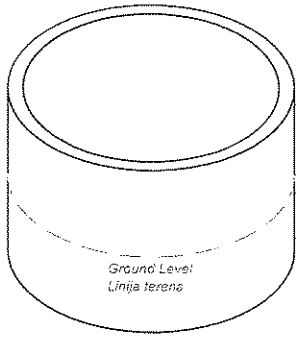

EMPLOYER: **INVESTITOR:**	**D.O.O. "Vodovod i kanalizacija" Danilovgrad**
TENDERER: **PONUĐAČ:**	**KARKANIAS ENVIRONMENTAL TECHNOLOGY S.A.** Industrial Area of Larissa | Postal Code: 41004 | Box: 3053 | Larissa, Greece Phone: +30 2410541386 E-mail: texniko@karkanias.gr | www.karkanias.gr
TENDER :	Danilovgrad Municipal Infrastructure Project Construction of Wastewater Plant Danilovgradski opštinski Infrastrukturni projekat Izgradnja postrojenja za prečišćavanje otpadnih voda
TENDER IDENTIFICATION : TENDERSKA IDENTIFIKACIJA:	EBRD ME DAN 9000
Subject : **Naslov :**	**Technical Proposal** **Tehnička Ponuda**
Date : Datum :	25th OCTOBER 2017 25.10.2017.
SCALE : RAZMJERA :	1:50
Drawing: Crtež:	**Sludge Holding Tank** **Bazen za mulj**
No : Br :	**M 14**

3/12/18

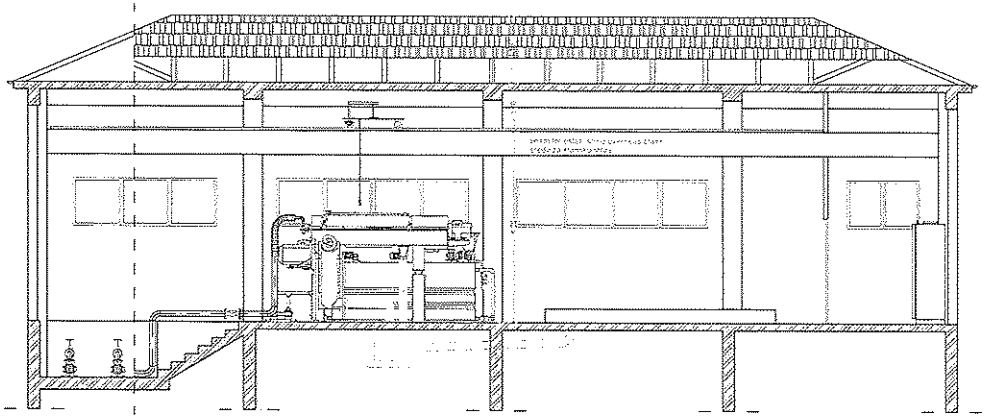

SECTION A-A
PRESJEK A-A

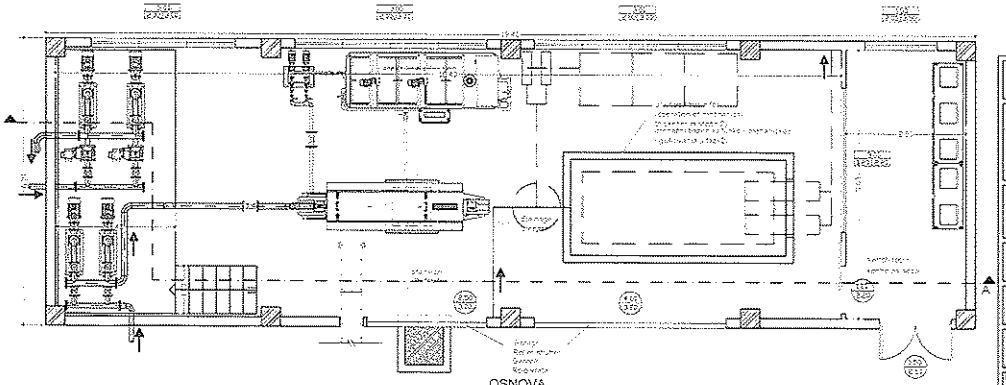

OSNOVA
PLAN VIEW

EKPLOYER: INVESTITOR:	D.O.O. "Vodovod i kanalizacija" Danilovgrad
TENDERER: PONUĐAČ:	KARKANIAS ENVIRONMENTAL TECHNOLOGY S.A. Industrial Area of Larissa | Postal Code: 41004 | Box: 3053 | Larissa, Greece Phone: +30 2410541386 E-mail: texniko@karkanias.gr | www.karkanias.gr
TENDER :	Danilovgrad Municipal Infrastructure Project Construction of Wastewater Plant Danilovgradski opštinski Infrastrukturni projekat Izgradnja postrojenja za prečišćavanje otpadnih voda
TENDER IDENTIFICATION : TENDERSKA IDENTIFIKACIJA:	EBRD ME DAN 9000
Subject : Naslov :	**Technical Proposal** **Tehnička Ponuda**
Date : Datum :	25th OCTOBER 2017 25.10.2017.
SCALE : RAZMJERA :	1:75
Drawing: Crtež:	SLUDGE MECHANICAL DEWATERING BUILDING ZGRADA ZA MEHANIČKU DEHIDRATACIJU MULJA
No : Br :	M15.1

3/12/18

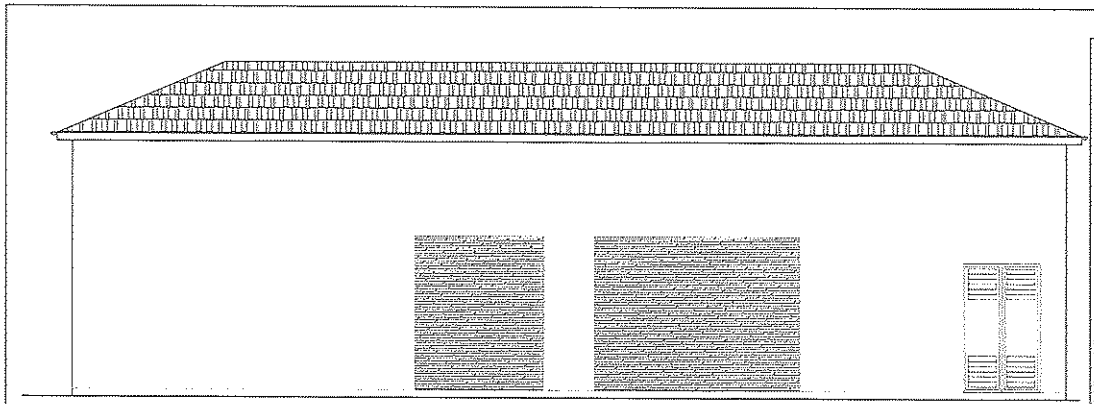

FRONT VIEW / IZGLED PREDNJE FASADE

EMPLOYER: INVESTITOR:	D.O.O. "Vodovod i kanalizacija" Danilovgrad
TENDERER: PONUĐAČ:	KARKANIAS ENVIRONMENTAL TECHNOLOGY S.A. Industrial Area of Larissa | Postal Code: 41004 | Box: 3053 | Larissa, Greece Phone: +30 2410541386 E-mail: texniko@karkanias.gr | www.karkanias.gr
TENDER :	Danilovgrad Municipal Infrastructure Project Construction of Wastewater Plant Danilovgradski opštinski Infrastrukturni projekat Izgradnja postrojenja za prečišćavanje otpadnih voda
TENDER IDENTIFICATION : TENDERSKA IDENTIFIKACIJA:	EBRD ME DAN 9000
Subject : Naslov :	**Technical Proposal** **Tehnička Ponuda**
Date : Datum :	25th OCTOBER 2017 25.10.2017.
SCALE : RAZMJERA :	1:75
Drawing: Crtež:	SLUDGE MECHANICAL DEWATERING BUILDING ZGRADA ZA MEHANIČKU DEHIDRATACIJU MULJA
No : Br :	M15.2

3/12/18

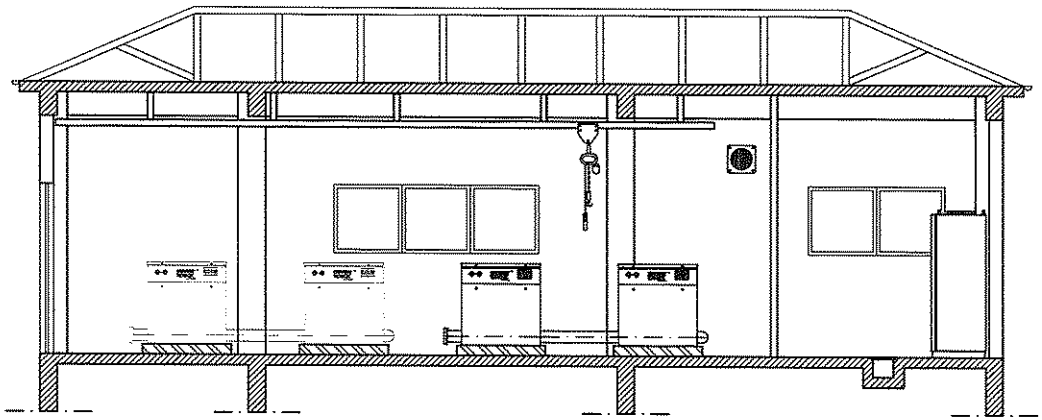

SECTION A-A
PRESJEK A-A

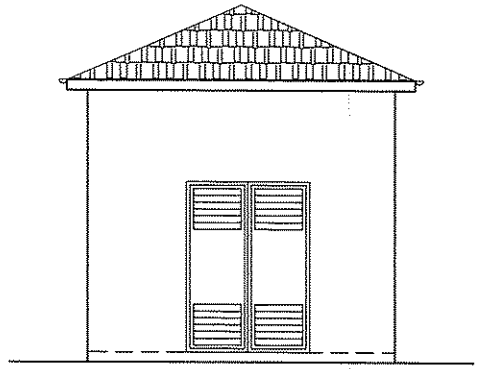

FRONT VIEW
IZGLED PREDNJE FASADE

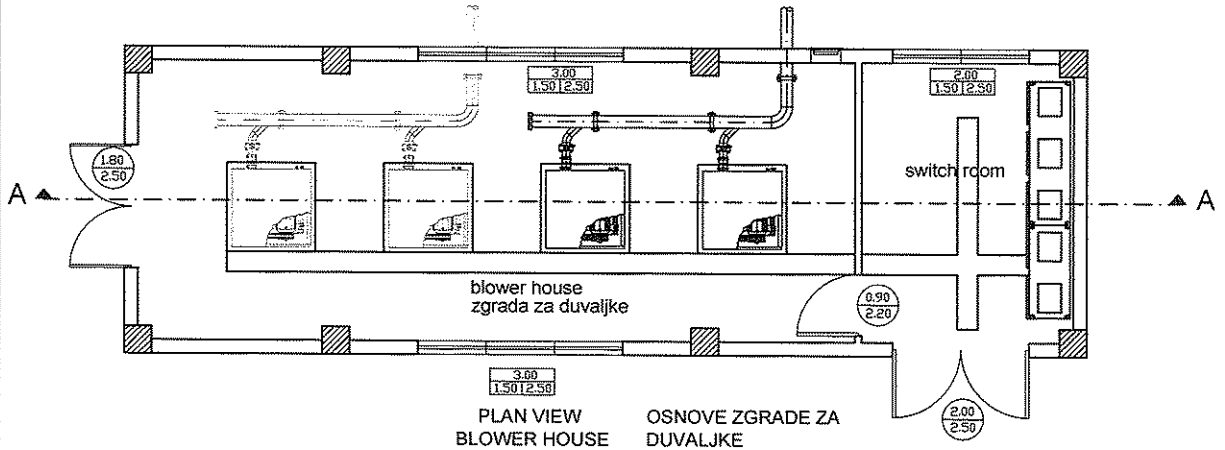

PLAN VIEW
BLOWER HOUSE

OSNOVE ZGRADE ZA
DUVALJKE

EMPLOYER: INVESTITOR:	D.O.O. "Vodovod i kanalizacija" Danilovgrad
TENDERER: PONUĐAČ:	KARKANIAS ENVIRONMENTAL TECHNOLOGY S.A. Industrial Area of Larissa | Postal Code: 41004 | Box: 3053 | Larissa, Greece Phone: +30 2410541386 E-mail: texniko@karkanias.gr | www.karkanias.gr
TENDER :	Danilovgrad Municipal Infrastructure Project Construction of Wastewater Plant Danilovgradski opštinski Infrastrukturni projekat Izgradnja postrojenja za prečišćavanje otpadnih voda
TENDER IDENTIFICATION : TENDERSKA IDENTIFIKACIJA:	EBRD ME DAN 9000
Subject : Naslov :	**Technical Proposal** **Tehnička Ponuda**
Date : Datum :	25th OCTOBER 2017 25.10.2017.
SCALE : RAZMJERA :	1:75
Drawing: Crtež:	**Blower house with switch room** **Zgrada za duvaljke sa kontrolnom sobom**
No : Br :	**M16**

3/12/18 €

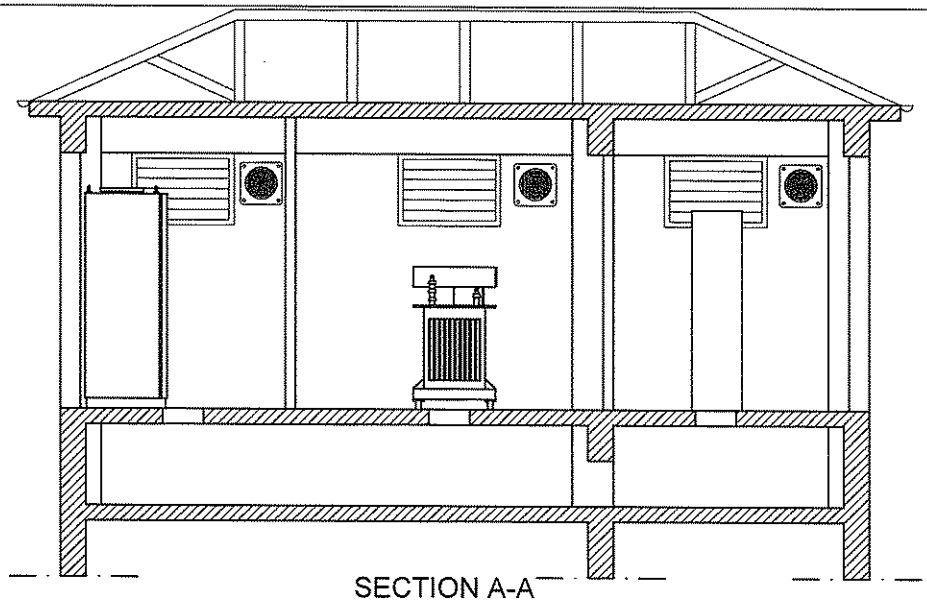

SECTION A-A
PRESJEK A-A

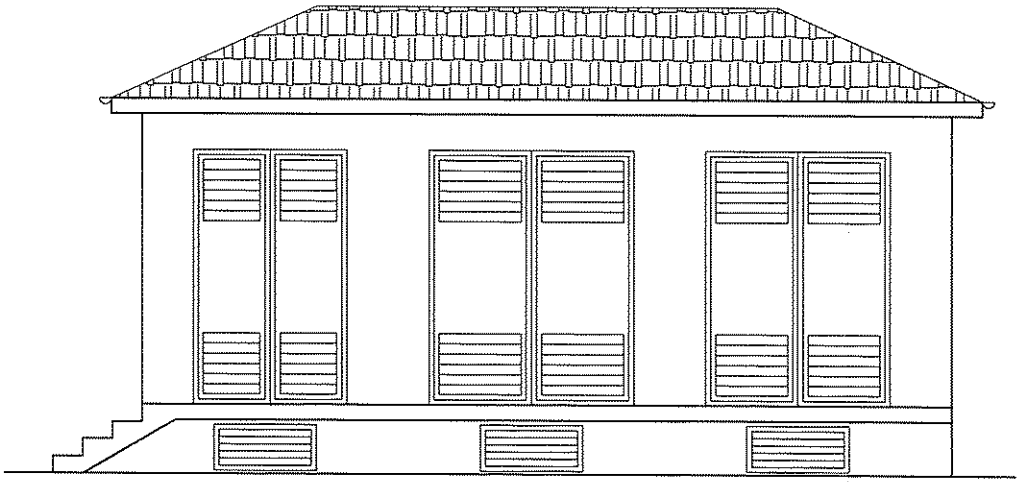

FRONT VIEW
IZGLED PREDNJE FASADE

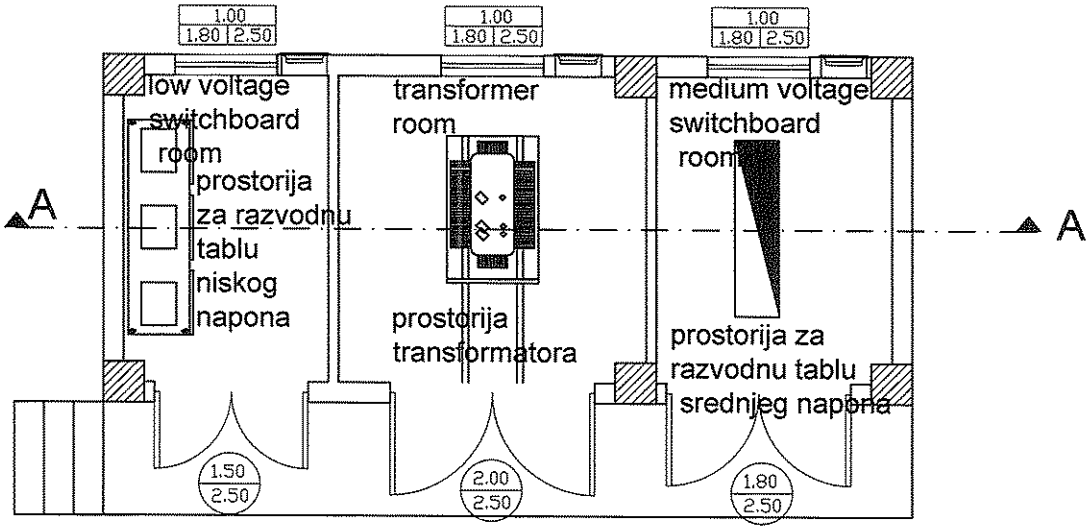

PLAN VIEW
TRANSFORMER STATION BUILDING

EMPLOYER: **INVESTITOR:**	**D.O.O. "Vodovod i kanalizacija" Danilovgrad**
TENDERER: **PONUĐAČ:**	**KARKANIAS ENVIRONMENTAL TECHNOLOGY S.A.** Industrial Area of Larissa | Postal Code: 41004 | Box: 3053 | Larissa, Greece Phone: +30 2410541386 E-mail: texniko@karkanias.gr | www.karkanias.gr
TENDER :	Danilovgrad Municipal Infrastructure Project Construction of Wastewater Plant Danilovgradski opštinski Infrastrukturni projekat Izgradnja postrojenja za prečišćavanje otpadnih voda
TENDER IDENTIFICATION : TENDERSKA IDENTIFIKACIJA:	EBRD ME DAN 9000
Subject : **Naslov :**	**Technical Proposal** **Tehnička Ponuda**
Date : Datum :	25th OCTOBER 2017 25.10.2017.
SCALE : RAZMJERA :	1:50
Drawing: Crtež:	**Transformer station building** **Transfostanica**
No : Br :	**M17**

3/12/18 €

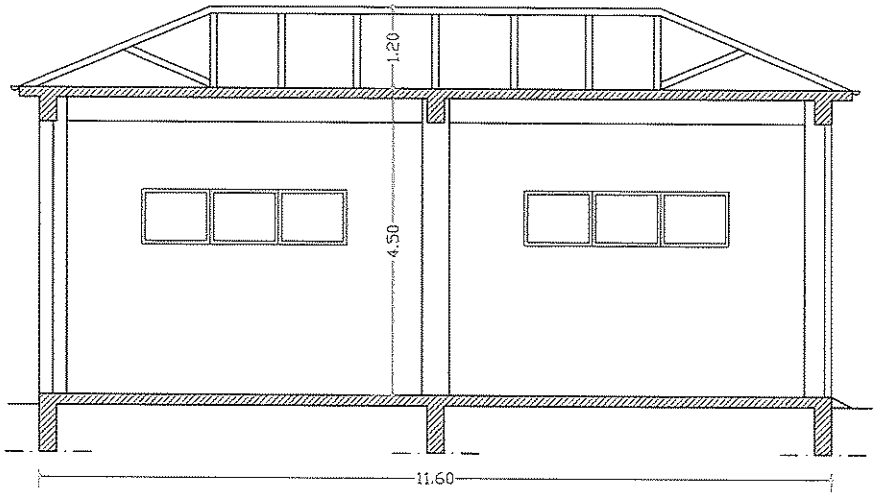

SECTION A-A
PRESJEK A-A

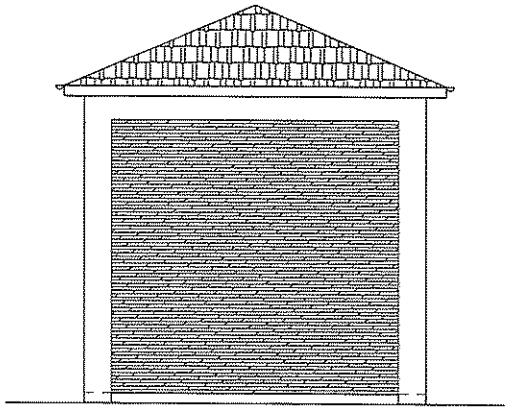

FRONT VIEW
IZGLED PREDNJE FASADE

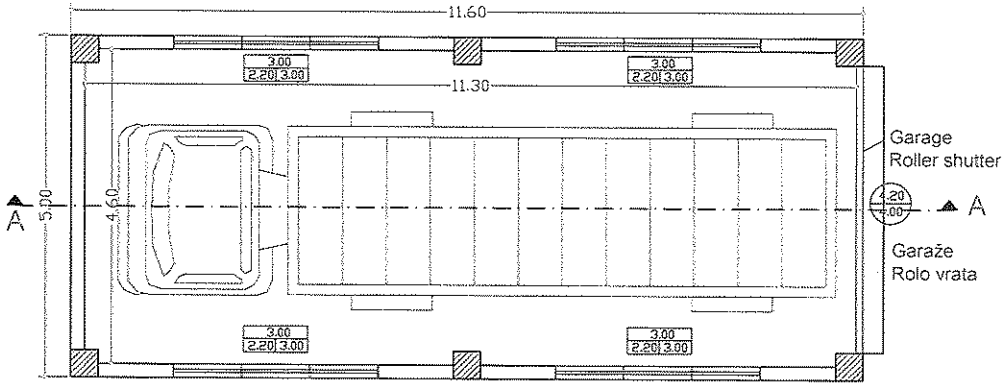

PLAN VIEW
GARAGE I
OSNOVA
GARAŽE I

EMPLOYER: INVESTITOR:	D.O.O. "Vodovod i kanalizacija" Danilovgrad
TENDERER: PONUĐAČ:	KARKANIAS ENVIRONMENTAL TECHNOLOGY S.A. Industrial Area of Larissa | Postal Code: 41004 | Box: 3053 | Larissa, Greece Phone: +30 2410541386 E-mail: texniko@karkanias.gr | www.karkanias.gr
TENDER :	Danilovgrad Municipal Infrastructure Project Construction of Wastewater Plant Danilovgradski opštinski Infrastrukturni projekat Izgradnja postrojenja za prečišćavanje otpadnih voda
TENDER IDENTIFICATION : TENDERSKA IDENTIFIKACIJA:	EBRD ME DAN 9000
Subject : Naslov :	**Technical Proposal** **Tehnička Ponuda**
Date : Datum :	25th OCTOBER 2017 25.10.2017.
SCALE : RAZMJERA :	1:75
Drawing: Crtež:	**GARAGE I** **GARAŽA I**
No : Br :	**M18**

3/12/18-C

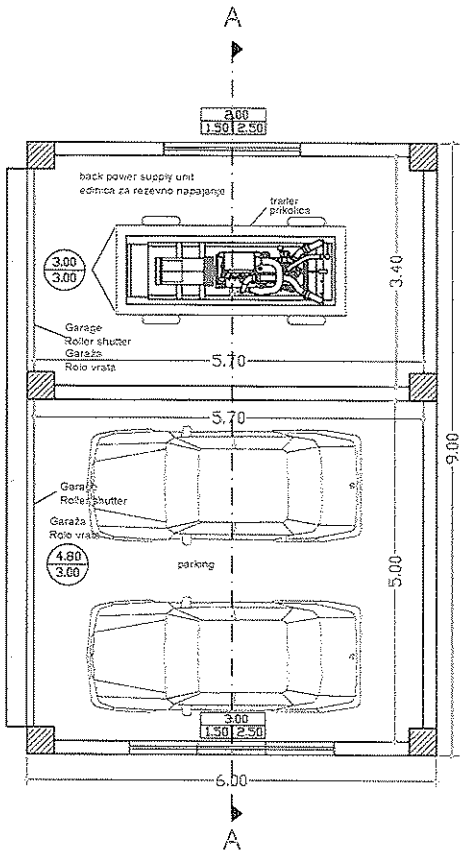

PLAN VIEW OSNOVA
GARAGE II GARAŽE II

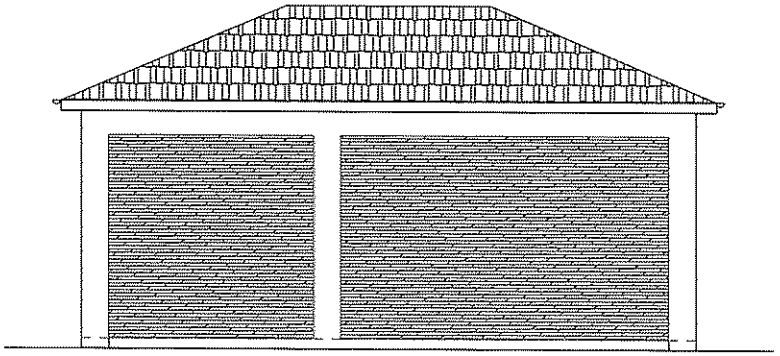

FRONT VIEW
IZGLED PREDNJE FASADE

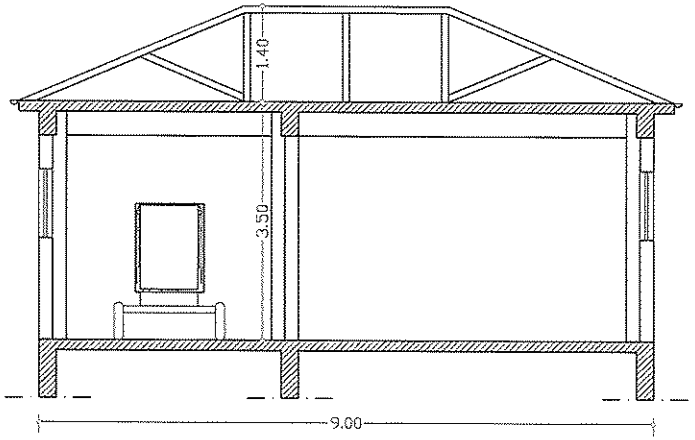

SECTION A-A
PRESJEK A-A

EMPLOYER: INVESTITOR:	D.O.O. "Vodovod i kanalizacija" Danilovgrad
TENDERER: PONUĐAČ:	KARKANIAS ENVIRONMENTAL TECHNOLOGY S.A. Industrial Area of Larissa | Postal Code: 41004 | Box: 3053 | Larissa, Greece Phone: +30 2410541385 E-mail: texniko@karkanias.gr | www.karkanias.gr
TENDER :	Danilovgrad Municipal Infrastructure Project Construction of Wastewater Plant Danilovgradski opštinski Infrastrukturni projekat Izgradnja postrojenja za prečišćavanje otpadnih voda
TENDER IDENTIFICATION : TENDERSKA IDENTIFIKACIJA:	EBRD ME DAN 9000
Subject : Naslov :	**Technical Proposal** **Tehnička Ponuda**
Date : Datum :	25th OCTOBER 2017 25.10.2017.
SCALE : RAZMJERA :	1:75
Drawing: Crtež:	**GARAGE II** **GARAŽA II**
No : Br :	**M19**

3/12/18

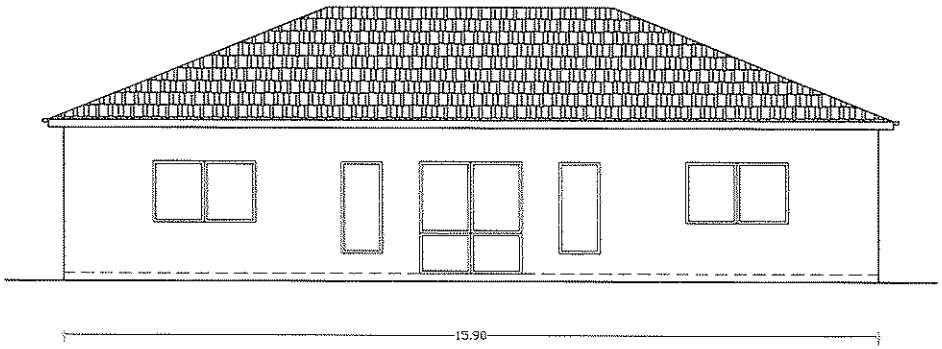

FRONT VIEW
IZGLED PREDNJE FASADE

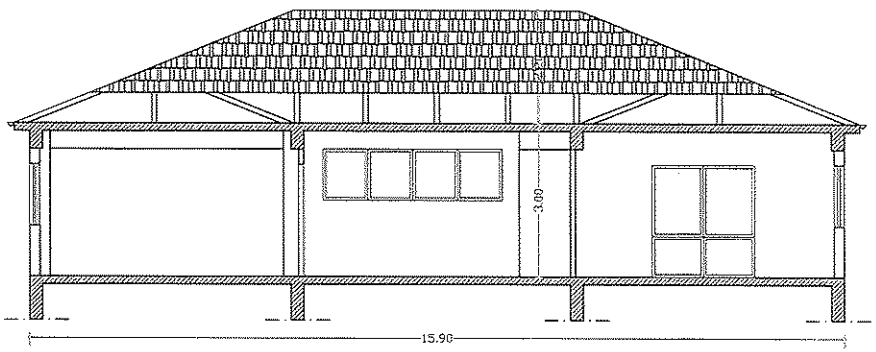

SECTION A-A
PRESJEK A-A

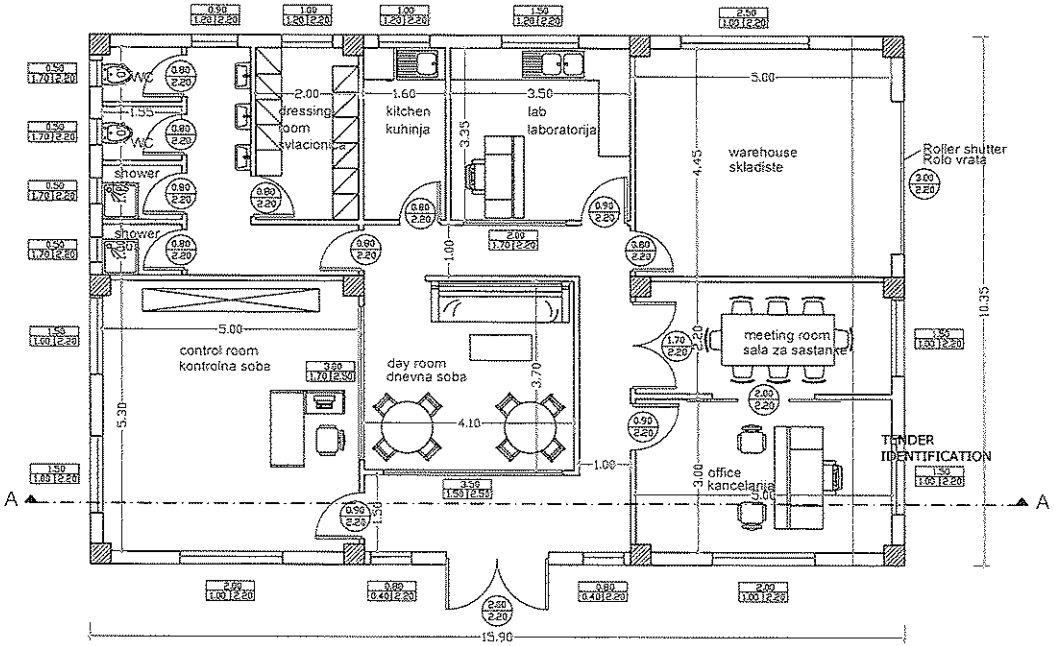

PLAN VIEW
OSNOVA

EMPLOYER: **INVESTITOR:**	**D.O.O. "Vodovod i kanalizacija" Danilovgrad**
TENDERER: **PONUĐAČ:**	**KARKANIAS ENVIRONMENTAL TECHNOLOGY S.A.** Industrial Area of Larissa | Postal Code: 41004 | Box: 3053 | Larissa, Greece Phone: +30 2410541386 E-mail: texniko@karkanias.gr | www.karkanias.gr
TENDER :	Danilovgrad Municipal Infrastructure Project Construction of Wastewater Plant Danilovgradski opštinski Infrastrukturni projekat Izgradnja postrojenja za prečišćavanje otpadnih voda
TENDER IDENTIFICATION : TENDERSKA IDENTIFIKACIJA:	EBRD ME DAN 9000 :
Subject : **Naslov :**	**Technical Proposal** **Tehnička Ponuda**
Date : Datum :	25th OCTOBER 2017 25.10.2017.
SCALE : RAZMJERA :	1:100
Drawing: Crtež:	**OPERATION BUILDING** **UPRAVNA ZGRADA**
No : Br :	**M20**

3/12/18 - C

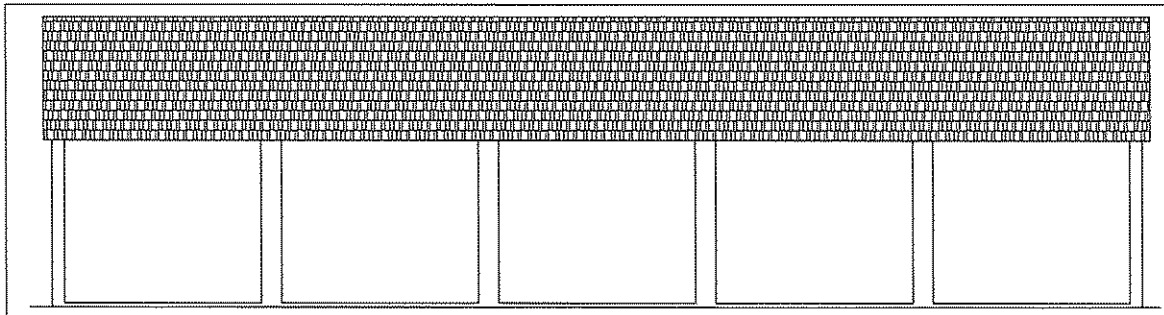

FRONT VIEW
IZGLED PREDNJE FASADE

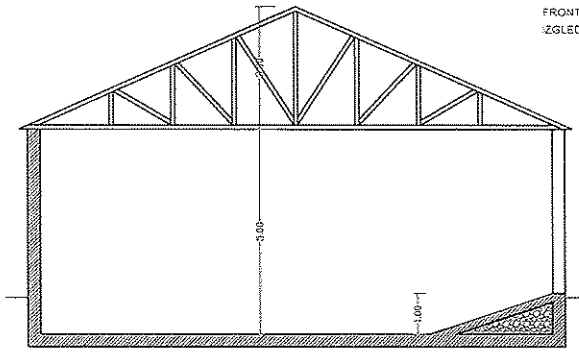

SECTION A-A
PRESJEK A-A

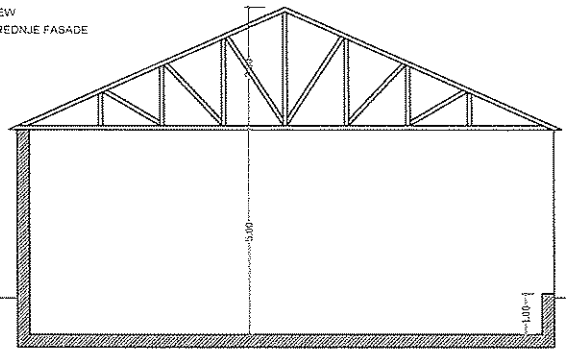

SECTION B-B
PRESJEK B-B

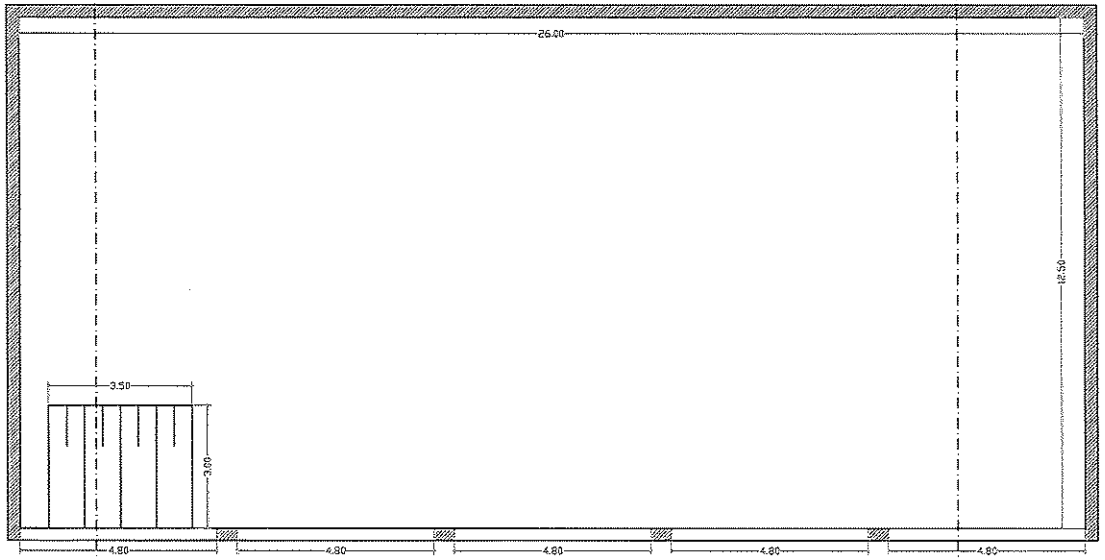

PLAN VIEW
OSNOVA

EMPLOYER: INVESTITOR:	D.O.O. "Vodovod i kanalizacija" Danilovgrad
TENDERER: PONUĐAČ:	KARKANIAS ENVIRONMENTAL TECHNOLOGY S.A. Industrial Area of Larissa | Postal Code: 41004 | Box: 3053 | Larissa, Greece Phone: +30 2410541386 E-mail: texniko@karkanias.gr | www.karkanias.gr
TENDER :	Danilovgrad Municipal Infrastructure Project Construction of Wastewater Plant Danilovgradski opštinski Infrastrukturni projekat Izgradnja postrojenja za prečišćavanje otpadnih voda
TENDER IDENTIFICATION : TENDERSKA IDENTIFIKACIJA:	EBRD ME DAN 9000
Subject : Naslov :	**Technical Proposal** **Tehnička Ponuda**
Date : Datum :	25th OCTOBER 2017 25.10.2017.
SCALE : RAZMJERA :	1:125
Drawing: Crtež:	**DEWATERED SLUDGE STORAGE SITE** **SKLADIŠTE ZA DEHIDRIRANI MULJ**
No : Br :	**M21**

3/72178

KARKANIAS
ENVIRONMENTAL TECHNOLOGY S.A.

Folder IV –APPENDIX TO UPDATED TECHNICAL TENDER

Folder IV –PRILOG TO TEHNIČKA PONUDA

Contents

Document			Section in Folder
		Technical Tender (Updated) **Tehnička ponuda**	
		Appendix to electromechanical equipment list **Prilog listi elektromehaničke opreme**	

KARKANIAS ENVIRONMENTAL TECHNOLOGY S.A.
INDUSTRIAL AREA OF LARISA - GREECE
POSTAL CODE 41004, BOX 3053
TEL.: +30 2410 541386 - FAX: +30 2410 541354
Email: info@karkanias.gr
TAX NUMBER: 095244711
REGISTRATION NUMBER: 48779/31/B/01/12

3/12/2018

GEORGIOS KARKANIAS
PRESIDENT

3/12/18

1. INLET AND OVERFLOW MANHOLE

3/12/18

KARKANIAS
ENVIRONMENTAL TECHNOLOGY S.A.

CHANNEL PENSTOCKS

Manufacturer General Specifications

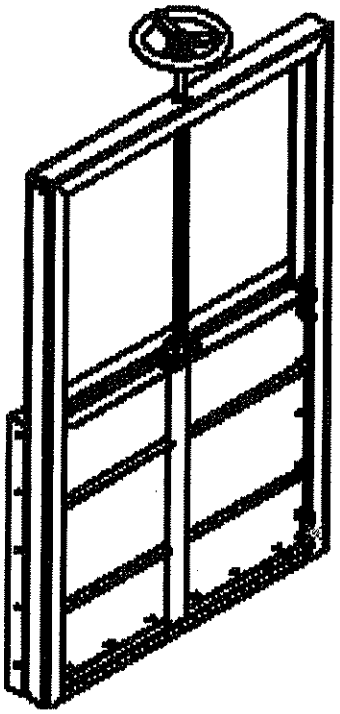

General description

Channel penstocks are 3-sided sealing gates manufactured in square and rectangular dimensions, together with a wide range of trim levels and designs to suit a variety of applications. Operation is achieved manually by means of a hand wheel, electrically or pneumatically by actuators. Mounting options can be mainly on face wall or alternatively embedded in concrete inside channels. The whole structure is made of stainless steel grade 304L for higher corrosion resistance.

HEADQUARTERS:
Industrial Area of Larisa
Postal Code 41004, BOX 3053 Greece
www.karkanias.gr

Phone: +30 2410 541386
Fax: +30 2410 541354
Email: info@karkanias.gr

3/12/18

KARKANIAS
ENVIRONMENTAL TECHNOLOGIES S.A.

Construction

- **Frame**: welded stainless steel
- **Frame seals**: parallel resilient EPDM seals bonded to frame sides
- **Door**: stainless steel with reinforcement angles if required
- **Guide system**: stainless steel and PTFE
- **Spindle nut**: zinc-free bronze
- **Spindle drive unit**: stainless steel with trapezoidal thread
- **Operation**: manually or electric with actuator Explosion-Proof II 2 G EExe II T3
- **Dimensions**: upon request

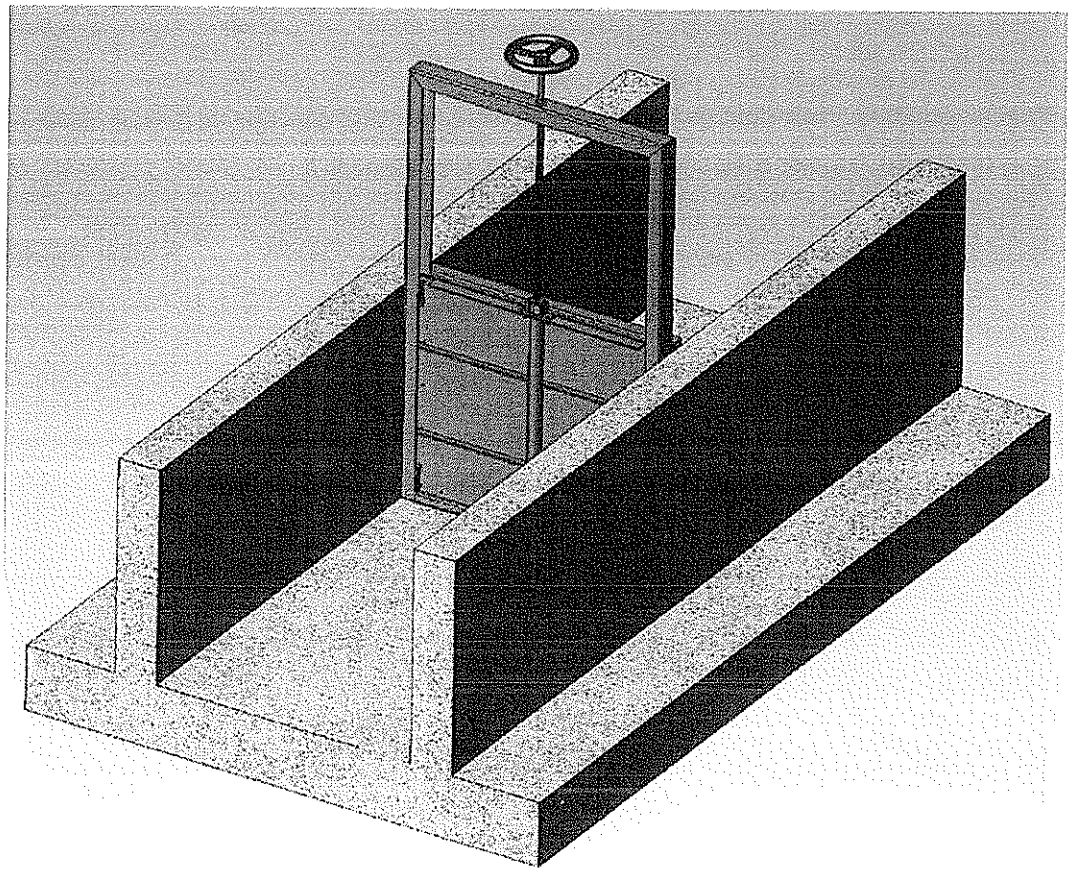

HEADQUARTERS:
Industrial Area of Larisa
Postal Code 41004, BOX 3053 Greece
www.karkanias.gr

Phone: +30 2410 541386
Fax: +30 2410 541354
Email: info@karkanias.gr

3/12/18

Design

Channel penstocks frame is welded stainless steel shaped in U-profile and is suitable for mounting by grouting or by wall mounting at the end or into an open channel. Each penstock is provided with a suitable handwheel of adequate diameter for the duty required. Gearing is supplied where is necessary to ensure that the required operating force applied by hand to the rim of the wheel does not exceed 200 N. Instead of handwheel an electric actuator can be applied. The height of the handing is approximately 1.0 m above the operating level.

Penstocks are of non-rising stem and operation is achieved by a spindle. Spindle's thread form is trapezoidal and direction of closing is clockwise. On the door is fixed the spindle nut which is made of zinc-free bronze. The door is equipped with reinforced ribs in order to withstand the applied pressure load.

Fixing nuts and bolts are made of stainless steel material with grade similar to whole structure.

Penstocks shall be water-tight under the conditions of head and direction of flow as stated in the appropriate Clause or Schedule of the Particular Specification.

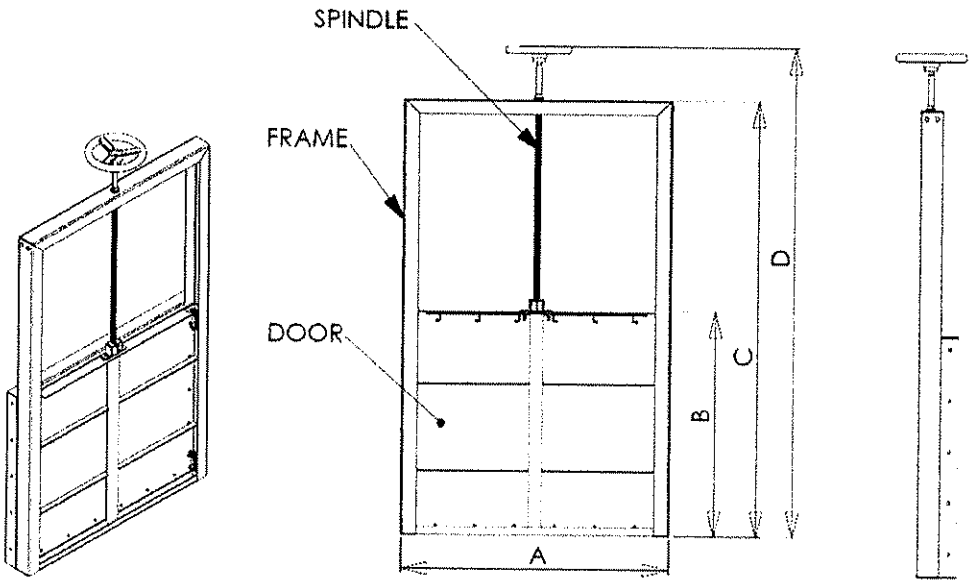

A=CHANNEL WIDTH
B=CHANNEL DEPTH
C=FRAME HEIGHT
D=WHEEL HEIGHT

HEADQUARTERS:
Industrial Area of Larisa
Postal Code 41004, BOX 3053 Greece
www.karkanias.gr

Phone: +30 2410 541386
Fax: +30 2410 541354
Email: info@karkanias.gr

3/12/18

KARKANIAS
ENVIRONMENTAL TECHNOLOGY S.A

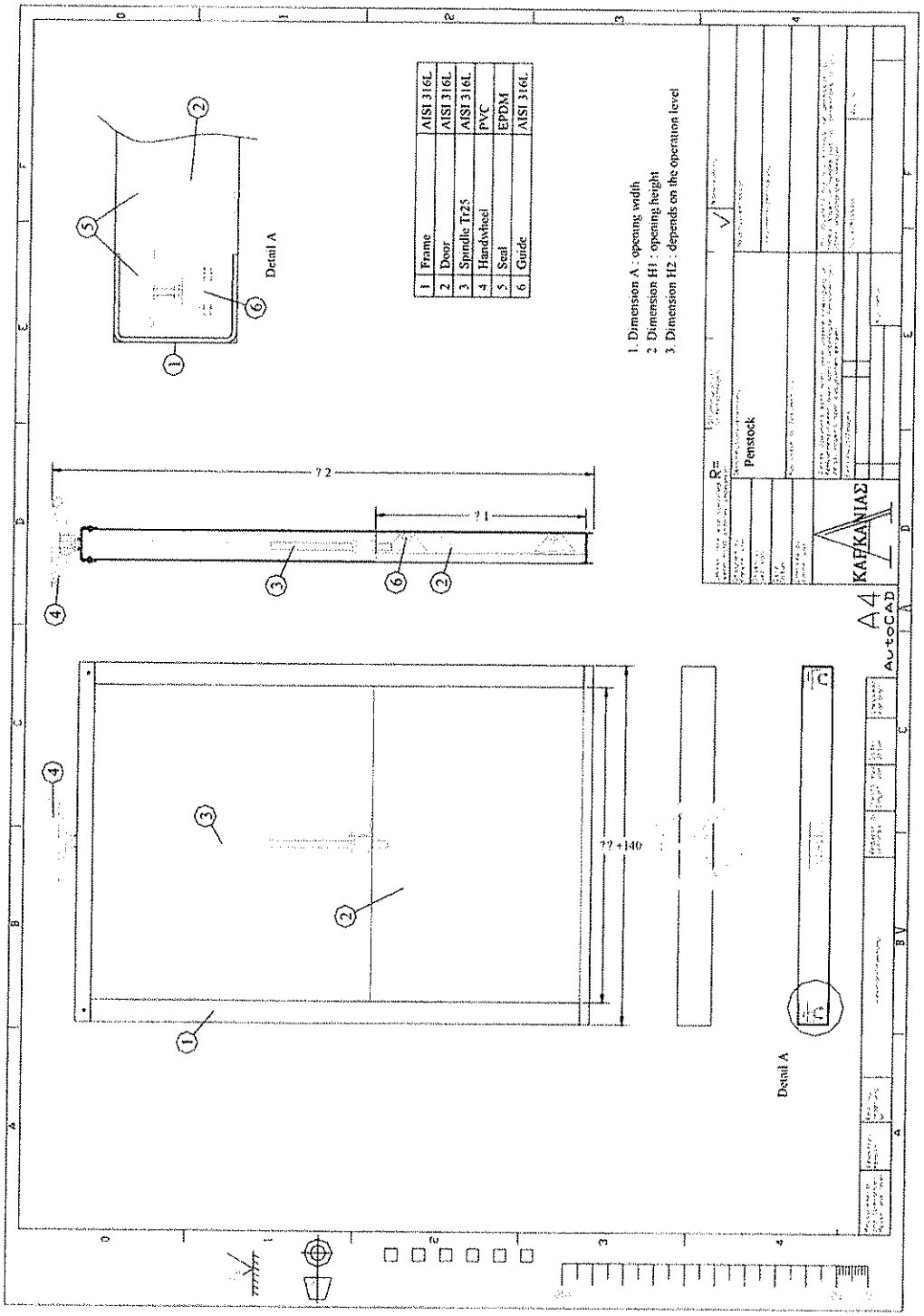

1	Frame	AISI 316L
2	Door	AISI 316L
3	Spindle Tr25	AISI 316L
4	Handwheel	PVC
5	Seal	EPDM
6	Guide	AISI 316L

HEADQUARTERS:
Industrial Area of Larisa
Postal Code 41004, BOX 3053 Greece
www.karkanias.gr

Phone: +30 2410 541386
Fax: +30 2410 541354
Email: info@karkanias.gr

3/12/18

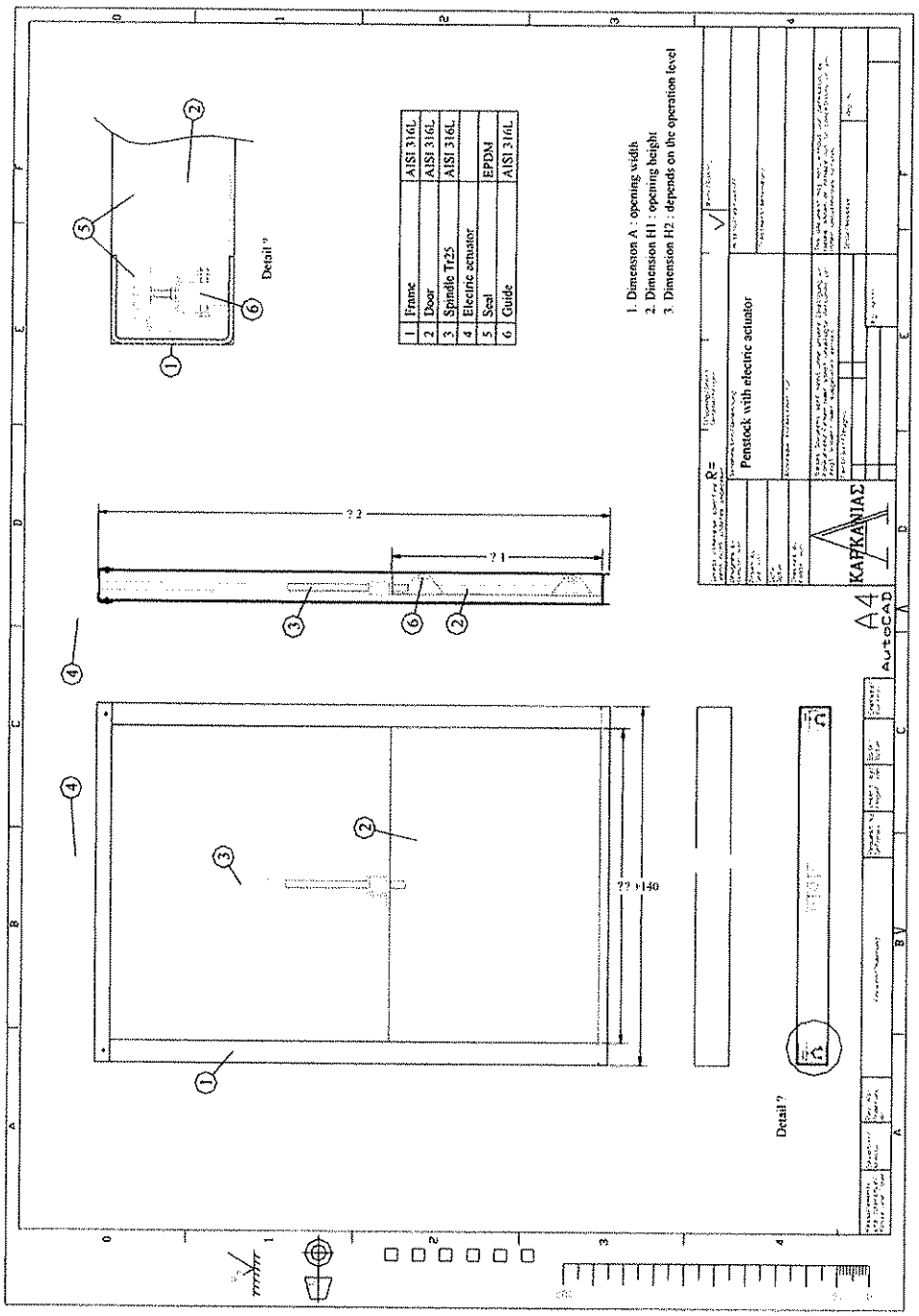

1	Frame	AISI 316L
2	Door	AISI 316L
3	Spindle Tr25	AISI 316L
4	Electric actuator	
5	Seal	EPDM
6	Guide	AISI 316L

HEADQUARTERS:
Industrial Area of Larisa
Postal Code 41004, BOX 3053 Greece
www.karkanias.gr

Phone: +30 2410 541386
Fax: +30 2410 541354
Email: info@karkanias.gr

3/12/18

EKATERINI VASSILIOU
LAWYER
ELEFTHERIAS 17 - TIRNAVOS 40100
LARISSA - GREECE
TEL. +30-24920 24240
LARISSA BAR ASSOCIATION
email: katvas9987@yahoo.gr

CERTIFICATE OF REGISTRATION

This is to certify that

KARKANIAS ENVIRONMENTAL TECHNOLOGY S.A.

Industrial Area of Larissa
PC 41004
PO Box 3053
Larissa
Greece

012

has been audited and found to meet the requirements of standard
ISO 9001:2008 Quality Management System

Scope of certification

General Contractor in Design, Construction, Operation and Maintenance of Water Management Liquid and Solid Wastes Projects in which Hydraulic, Electromechanical, Structural, Industrial, Energy Projects, Roads and Ports Construction are Included.

Certificate number: 10096

Issue number: 2017-01

Certificate start date: 19 February 2017

Certificate expiry date: 14 September 2018

Date of initial certification: 19 February 2014

Karen Prendergast
Sector Director - Certification
Exova BM TRADA

Exova (UK) Ltd, (T/A Exova BM TRADA), Chiltern House, Stocking Lane, High Wycombe, Buckinghamshire, HP14 4ND, UK
Registered Office: Exova (UK) Ltd, Lochend Industrial Estate, Newbridge, Midlothian EH28 8PL United Kingdom. Reg No. SC070429

This certificate remains the property of Exova (UK) Ltd. This certificate and all copies or reproductions of the certificate shall be returned to Exova (UK) Ltd or destroyed if requested. Further clarification regarding the scope of this certificate and verification of the certificate is available through Exova BM TRADA or at the above address or at www.exova-bmtrada.com

The use of the UKAS accreditation mark indicates accreditation in respect of those activities covered by the accreditation certification 012

Multisite clients - The scope of certification shown above includes the participating sites shown in appendix A

3/12/18

EKATERINI VASSILIOU
LAWYER
ELEFTHERIAS 17 - TIRNAVOS 40100
LARISSA - GREECE
TEL. +30 24920 24240
LARISSA BAR ASSOCIATION
email: katvas9987@yahoo.gr

012

CERTIFICATE OF REGISTRATION

This is to certify that

KARKANIAS ENVIRONMENTAL TECHNOLOGY S.A.

Industrial Area of Larissa
PC 41004
PO Box 3053
Larissa
Greece

has been audited and found to meet the requirements of standard
ISO 14001:2004 Environmental Management System

Scope of certification

General Contractor in Design, Construction, Operation and Maintenance of Water Management Liquid and Solid Wastes Projects in which Hydraulic, Electromechanical, Structural, Industrial, Energy Projects, Roads and Ports Construction are Included.

Certificate number: 2377

Issue number: 2017-01

Certificate start date: 19 February 2017

Certificate expiry date: 14 September 2018

Date of initial certification: 19 February 2014

Karen Prendergast
Sector Director - Certification
Exova BM TRADA

Exova (UK) Ltd, (T/A Exova BM TRADA), Chiltern House, Stocking Lane, High Wycombe, Buckinghamshire, HP14 4ND, UK
Registered Office: Exova (UK) Ltd, Inchbend Industrial Estate, Newbridge, Midlothian EH28 8PL United Kingdom. Reg No. SC070429.

This certificate remains the property of Exova (UK) Ltd. This certificate and all copies or reproductions of the certificate shall be returned to Exova (UK) Ltd or destroyed if requested. Further clarification regarding the scope of this certificate and verification of the certificate is available through Exova BM TRADA or at the above address or at www.exovabmtrada.com

The use of the UKAS accreditation mark indicates accreditation in respect of those activities covered by the accreditation certification 012

Multisite clients - The scope of certification shown above includes the participating sites shown in appendix A

3/12/18

EKATERINI VASSILIOU
LAWYER
ELEFTHERIAS 17 - TIRNAVOS 40100
LARISSA - GREECE
TEL. +30 2492024240
LARISSA BAR ASSOCIATION
email: katvas9987@yahoo.gr

012

CERTIFICATE OF REGISTRATION

This is to certify that

KARKANIAS ENVIRONMENTAL TECHNOLOGY S.A.

Industrial Area of Larissa
PC 41004
PO Box 3053
Larissa
Greece

has been audited and found to meet the requirements of standard
OHSAS 18001:2007 Health & Safety Management System

Scope of certification

General Contractor in Design, Construction, Operation and Maintenance of Water Management Liquid and Solid Wastes Projects in which Hydraulic, Electromechanical, Structural, Industrial, Energy Projects, Roads and Ports Construction are Included.

Certificate number: 796

Issue number: 2017-01

Certificate start date: 19 February 2017

Certificate expiry date: 18 February 2020

Date of initial certification: 19 February 2014

Karen Prendergast
Sector Director - Certification
Exova BM TRADA

Exova (UK) Ltd. (T/A Exova BM TRADA), Chiltern House, Stocking Lane, High Wycombe, Buckinghamshire, HP14 4ND, UK
Registered Office: Exova (UK) Ltd, Technal Industrial Estate, Newbridge, Midlothian EH28 8PL United Kingdom. Reg No. SC070429.

This certificate remains the property of Exova (UK) Ltd. This certificate and all copies or reproductions of the certificate shall be returned to Exova (UK) Ltd or destroyed if requested. Further clarification regarding the scope of this certificate and verification of the certificate is available through Exova BM TRADA or at the above address or at www.exovabmtrada.com

The use of the UKAS accreditation mark indicates accreditation in respect of those activities covered by the accreditation certification 012

Multisite clients - The scope of certification shown above includes the participating sites shown in appendix A

3/12/2018

© Siemens AG 2015

Overview

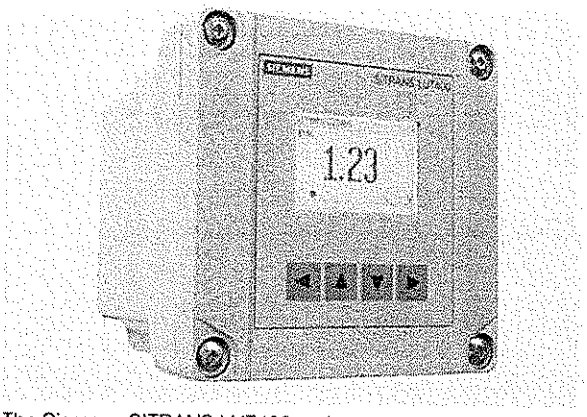

The Siemens SITRANS LUT400 series controllers are compact, single point, long-range ultrasonic controllers for continuous level or volume measurement of liquids, slurries, and solids, and high accuracy monitoring of open channel flow.

Benefits

- Small 1/2 DIN enclosure [144 h x 144 d x 146 w mm (5.7 x 5.7 x 5.75 inch)] with standard universal mounting bracket for wall, pipe, and DIN rail, plus an optional panel mount
- Easy to use HMI display with local four-button programming, menu-driven parameters, and Wizard support for key applications
- English, German, French, Spanish, Chinese, Italian, Portuguese, and Russian texts on the HMI.
- Level, Volume, OCM Flow monitoring
- Three relays combined with a suite of pump, alarm, and relay control features
- HART Communications
- EDDs for SIMATIC PDM, AMS Device Manager, and Field Communicator 375/475, plus DTMs for FDTs (Field Device Tools)
- Web browser for local programming from an intuitive web-based interface
- Two discrete inputs for backup level override and pump interlock functions
- Echo profile and trend views from the local display
- Patented digital receiver for improved performance in electrically noisy applications (close proximity to VSDs)
- Real time clock with daylight savings time, supporting an integrated datalogger and energy saving algorithms for minimizing pump operation during high cost energy periods
- Removable terminal blocks for ease of wiring
- MCERTS Certified for Open Channel Flow

Application

The SITRANS LUT400 comes in three different models, depending on the application, level of performance and functionality required:

- SITRANS LUT420 Level Controller: Level or volume measurement of liquids, slurries, and solids, as well as basic pump control functions, and basic data logging capability
- SITRANS LUT430 Level, Pump and Flow Controller: Includes all features of the LUT420 plus a full suite of advanced pump control and alarm functionality, open channel flow monitoring, and basic flow data logging capability
- SITRANS LUT440 High Accuracy OCM: Our most featured, highest accuracy model. Includes all features of the LUT430, plus the industry's best accuracy (± 1 mm within 3 m), full suite of advanced control functionality, and enhanced flow logging capability
- Key applications: wet wells, reservoirs, flumes/weirs, chemical storage, liquid storage, hoppers, crusher bins, dry solids storage

3/12/18

© Siemens AG 2015

Technical specifications

Mode of Operation	Ultrasonic level, volume, pump, and open channel flow
Measuring range	0.3 ... 60 m (1 ... 196 ft), transducer dependent
Input	
Discrete	0 ... 50 V DC switching level Logical 0 ≤ 10 V DC Logical 1 = 10 ... 50 V DC Max. 3 mA
Output	
Transducer frequency	10 ... 52 kHz
Ultrasonic transducer	Compatible transducers: All EchoMax and ST-H series transducers
Relays	• 1 SPDT Form C, NO or NC relay, rated 1A at 250 V AC, non-inductive and 3A at 30 V DC • 2 SPST Form A, NO relays, rated 5A at 250 V AC, non-inductive and 3 A at 30 V DC
mA output	4 ... 20 mA, isolated
• Max. load	600 Ω max. in ACTIVE mode, 750 Ω max. in PASSIVE mode
• Resolution	0.1 % of range
Accuracy	
Error in measurement	• Standard operation: ± 1 mm (0.04 inch) plus 0.17 % of measured distance • High accuracy OCM: ± 1 mm (0.04 inch), within 3 m (9.84 ft) range
Resolution	• Standard operation: 0.1 % of range or 2 mm (0.08 inch), whichever is greater • High accuracy OCM: 0.6 mm (0.02 inch), within 3 m (9.84 ft) range
Temperature compensation	• -40 ... +150 °C (-40 ... +300 °F) • Integral temperature sensor in transducer • External TS-3 temperature sensor (optional) • Programmable fixed temperature values
Rated operating conditions	
Installation conditions	
• Location	Indoor/outdoor
• Installation category	II
• Pollution degree	4
Ambient conditions	
• Ambient temperature (enclosure)	-20 . . +50 °C (-4 . . +122 °F)

Design	
Weight	
• Enclosure with display lid	1.3 kg (2.87 lb)
• Enclosure with blank lid:	1.2 kg (2.65 lb)
Material (enclosure)	Polycarbonate
Degree of protection	
• Enclosure with display or blank lid:	IP65/Type 4X/NEMA 4X
• Enclosure with blank lid and knock-out removed:	IP20
Remote display lid	IP65/Type 3/NEMA 3
Cable	
Transducer and mA output signal	• Transducer, mA output: 2 copper conductors, twisted, with foil shield/drain wire, 300 V 0.5 ... 0.75 mm² (22 ... 18 AWG) • Relay/power to be copper conductors per local requirements to meet 250 V 5 A contact rating
Max. separation between transducer and transceiver	365 m (1 200 ft)
Displays and controls	60 x 40 mm (2.36 x 1.57 inch) removable LCD, 240 x 160 pixels resolution, operational up to 5 m from enclosure base
Programming	
• Primary	4 Local push buttons
• Secondary	• PC running SIMATIC PDM • PC running Emerson AMS Device Manager • PC running a web browser • PC running a Field Device Tool (FDT) • Field Communicator 375/475 (FC375/FC475)
Memory	• 512 kB flash EPROM • 1.5 MByte flash for data logging
Power supply	
AC version	100 ... 230 V AC ± 15 %, 50/60 Hz, 36 VA Fuse: 5 x 20 mm, Slow Blow, 0.25 A, 250 V
DC version	10 ... 32 V DC, 10 W Fuse: 5 x 20 mm, Slow Blow, 1.6 A, 125 V
Certificates and approvals	
General	$CSA_{US/C}$, CE, FM, UL listed, RCM, MCERTS certified for Open Channel Flow
Hazardous	
• Non-incendive (Canada)	CSA Class I, Div. 2, Groups A, B, C, D; Class II, Div. 2, Groups F, G; Class III
• Shipping	Lloyd's Register, ABS
Communication	HART 7.0, USB

3/12/18

© Siemens AG 2015

Category	Feature	SITRANS LUT420 Level Controller	SITRANS LUT430 Level, pump and flow controller	SITRANS LUT440 High accuracy OCM controller
Operations	Level, space, and distance measurement	✓	✓	✓
	Open channel flow measurement		✓	✓
	Volume conversion	✓	✓	✓
Specifications	Compatible with EchoMax and ST-H transducers	✓	✓	✓
	Standard accuracy: ± 1 mm +0.17 % of measured distance	✓	✓	✓
	High accuracy: ± 1 mm within 3 meters			✓
	Mounting options: wall or panel, pipe, DIN-rail	✓	✓	✓
Data logging and communications	HART communications	✓	✓	✓
	4 ... 20 mA output (active and passive)	✓	✓	✓
	Integrated datalogger for measurement value and alarms	✓	✓	✓
	Integrated datalogger for fixed rate flow logging		✓	✓
	Integrated datalogger for variable rate flow logging triggered by changes in flow condition			✓
	Daily data logging for maximum, minimum and average flow, daily totalized volume, and minimum and maximum temperature		✓	✓
Flow monitoring	High accuracy open channel flow measurement			✓
	9 digit daily and running flow totalizers		✓	✓
	High and low flowrate alarms		✓	✓
	External totalizer and sampler control		✓	✓
	MCERTS Class 1 Certification			✓
	MCERTS Class 2 Certification		✓	
Pump control	Energy saving algorithms for pump control		✓	✓
	Wall cling reduction	✓	✓	✓
	Pump run-on functionality		✓	✓
	Pump start and power resumption delays		✓	✓
	Alternate duty pump routines	✓	✓	✓
	Fixed duty and service ratio pump routines		✓	✓
	Pumped volume totalizer		✓	✓
	Submergence detection	✓	✓	✓
	Discrete input pump interlocks		✓	✓
	Time to spill calculation		✓	✓

3/12/18

© Siemens AG 2015

Selection and Ordering data	Article No.
SITRANS LUT420 and LUT430 Compact ultrasonic level controllers for continuous short to long-range level or volume measurement of liquids, slurries, and solids. Both units include basic relay functions for pumps, alarms, and other controls, plus onboard data logging. LUT430 offers additional advanced pump control and alarm functionality, open channel flow monitoring, and basic flow data logging capability. Functionality varies by model. ↗ Click on the Article No. for the online configuration in the PIA Life Cycle Portal.	↗ **7ML5050-** **0 [ ] [ ] - [ ] 0**
Model	
SITRANS LUT420 - Level controller ☆	**A**
SITRANS LUT430 - Level, Pump & Flow controller ☆	**B**
Enclosure display options	
With display ☆	**A**
With remote panel mount display [Includes panel mount cable extension, 2.5 m (8.2 ft)] ☆	**B**
No display (blank lid provided) ☆ Note: Enclosure includes back-plate for wall and pipe mounting, and an integrated clip for DIN-rail mounting. DIN-rail mounting for standard TS35 x 7.5 and TS35 x 15 mm DIN-rail to IEC 60715, EN 60715	**C**
Input voltage	
100 ... 230 V AC ± 15 % ☆	**1**
10 ... 32 V DC ☆	**2**
Cable inlet	
3 cable inlets, cable glands not supplied ☆	**1**
3 cable inlets, 3 M20 plastic cable glands supplied ☆	**2**
Number of measurement points	
Single point system (includes one transducer input, one mA output, and one external temperature sensor input) ☆	**1**
Communications and I/O	
HART, 2 discrete inputs, 3 relays ☆	**D**
Approvals	
General purpose CE, FM, $CSA_{US/C}$, UL, RCM ☆	**A**
Hazardous locations CSA Class I, II, III, Div. 2 (Groups A, B, C, D, F, G)	**C**

☆ We can offer shorter delivery times for configurations designated with the Quick Ship Symbol ☆. For details see page 9/5 in the appendix.

Selection and Ordering data	Order code
Further designs	
Please add "**-Z**" to Article No. and specify Order code(s).	
Manufacturer's test certificate M to DIN 55350, Part 18 and to ISO 9000	**C11**
Stainless steel tag [69 x 50 mm (2.71 x 1.97 inch)]; Measuring-point number/identification (max. 27 characters) specify in plain text	**Y15**
Namur NE43 failsafe setting - device preset to failsafe < 3.6 mA	**N07**

	Article No.
English	**A5E33329501**
French	**7ML1998-5MV11**
Spanish	**7ML1998-5MV21**
German	**A5E35690863**
Italian	**7ML1998-5MV51**
Multi-language compact operating instructions Note: The operating instructions should be ordered as a separate line item on the order	**7ML1998-5XU81**

Selection and Ordering data	Article No.
Communications Manual	
English	**A5E33701270**
French	**7ML1998-5NE11**
Spanish	**7ML1998-5NE21**
German	**7ML1998-5NE31**
Italian Note: The communications manual should be ordered as a separate line item on the order.	**7ML1998-5NE51**
Accessories	
Tag, stainless steel, 12 x 45 mm (0.47 x 1.77 inch), one text line, suitable for enclosure	**7ML1930-1AC**
TS-3 Temperature Sensor - see TS-3 on page 4/189	**7ML1813-...**
Panel mount cable extension, 2.5 m (8.2 ft)	**7ML1930-1GF**
Qty 3 cable glands and retaining nuts	**7ML1930-1GB**
USB cable, 2 m (6.56 ft) - Standard USB-A to USB-mini B	**7ML1930-1GD**
Hart modem/USB (for use with a PC and SIMATIC PDM)	**7MF4997-1DB**
Sunshield, 304 stainless steel	**7ML1930-1GE**
SITRANS RD100, loop powered display - see Chapter 7	**7ML5741-...**
SITRANS RD200, universal input display with Modbus conversion - see Chapter 7	**7ML5740-...**
SITRANS RD300, dual line display with totalizer and linearization curve and Modbus conversion - see Chapter 7	**7ML5744-...**
SITRANS RD500 web, universal remote monitoring solution for instrumentation - see Chapter 7	**7ML5750-...**
Spare parts	
Panel mount retrofit kit (convert standard unit with display to panel mount version)	**7ML1830-1PA**
Terminal block replacement kit (5 piece kit with one of each removable terminal)	**7ML1830-1PB**
Wall/Pipe mount plate	**7ML1830-1PC**
Enclosure (include blank label)	**7ML1830-1PD**
SITRANS LUT400 Lid (with Display)	**7ML1830-1PE**
SITRANS LUT400 Lid (blank)	**7ML1830-1PF**
Fuse - AC (0.25 A, 250 V, Slow Blow)	**7ML1830-1PG**
Fuse - DC (1.6 A, 125 V, Slow Blow)	**7ML1830-1PH**
Battery BR2032	**7ML1830-1PJ**
Panel mount gasket and fastener kit	**7ML1830-1PK**
DIN-rail clip	**7ML1830-1PL**

☆ We can offer shorter delivery times for configurations designated with the Quick Ship Symbol ☆. For details see page 9/5 in the appendix.

© Siemens AG 2015

Level Measurement

Continuous level measurement - Ultrasonic controllers

SITRANS LUT400 series

Selection and Ordering data	Article No.
SITRANS LUT440 The SITRANS LUT440 is the most accurate and featured model in the LUT400 series. It includes high accuracy open channel monitoring, relay functions for external samplers, totalizers, alarms, and enhanced data logging, as well as all pump and control functions available with other models in the LUT400 series. ↗ Click on the Article No. for the online configuration in the PIA Life Cycle Portal.	↗ **7ML5050-0 - 0**
Model	
SITRANS LUT440 - High accuracy Open Channel Monitor[1]	C
Enclosure display options	
With display	A
With remote panel mount display [Includes panel mount cable extension, 2.5 m (8.2 ft)]	B
No display (blank lid provided)	C
Note: Enclosure includes back-plate for wall and pipe mounting, and an integrated clip for DIN-rail mounting. DIN-rail mounting for standard TS35 x 7.5 and TS35 x 15 mm DIN-rail to IEC 60715, EN 60715	
Input voltage	
100 ... 230 V AC ± 15 %	1
10 ... 32 V DC	2
Cable inlet	
3 cable inlets, cable glands not supplied	1
3 cable inlets, 3 M20 plastic cable glands supplied	2
Number of measurement points	
Single point system (includes one transducer input, one mA output, and one external temperature sensor input)	1
Communications and I/O	
HART, 2 discrete inputs, 3 relays	D
Approvals	
General purpose CE, FM, $CSA_{US/C}$, UL, RCM	A
Hazardous locations CSA Class I, II, III, Div. 2, (Groups A, B, C, D, F, G)	C

[1] Compatible with all EchoMax Transducers. High accuracy OCM performance with the use of an XRS-5 transducer and TS-3 temperature sensor (each sold separately).

We can offer shorter delivery times for configurations designated with the Quick Ship Symbol. For details see page 9/5 in the appendix.

Selection and Ordering data	Order code
Further designs	
Please add "-Z" to Article No. and specify Order code(s).	
Manufacturer's test certificate M to DIN 55350, Part 18 and to ISO 9000	C11
Stainless steel tag [69 x 50 mm (2.71 x 1.97 inch)]: Measuring-point number/identification (max. 27 characters) specify in plain text	Y15
Namur NE43 failsafe setting - device preset to failsafe < 3.6 mA	N07

	Article No.
English	A5E33329501
French	7ML1998-5MV11
Spanish	7ML1998-5MV21
German	A5E35690863
Italian	7ML1998-5MV51

Note: The operating instructions should be ordered as a separate line item on the order.

Selection and Ordering data	Article No.
Communications Manual	
English	A5E33701270
French	7ML1998-5NE11
Spanish	7ML1998-5NE21
German	7ML1998-5NE31
Italian	7ML1998-5NE51
Note: The communications manual should be ordered as a separate line item on the order.	
Accessories	
Tag, stainless steel, 12 x 45 mm (0.47 x 1.77 inch), one text line, suitable for enclosure	7ML1930-1AC
TS-3 Temperature Sensor - see TS-3 on page 4/189	7ML1813-...
Panel mount cable extension 2.5 m (8.2 ft)	7ML1930-1GF
Qty 3 cable glands and retaining nuts	7ML1930-1GB
USB cable 2 m (6.56 ft) - Standard USB-A to USB-mini B	7ML1930-1GD
HART modem/USB (for use with PC and SIMATIC PDM)	7MF4997-1DB
Sunshield, 304 stainless steel	7ML1930-1GE
SITRANS RD100, loop powered display - see Chapter 7	7ML5741-...
SITRANS RD200, universal input display with Modbus conversion - see Chapter 7	7ML5740-...
SITRANS RD300, dual line display with totalizer and linearization curve and Modbus conversion - see Chapter 7	7ML5744-...
SITRANS RD500 web, universal remote monitoring solution for instrumentation - see Chapter 7	7ML5750-...
Spare parts	
Panel mount retrofit kit (convert standard unit with display to panel mount version)	7ML1830-1PA
Terminal block replacement kit (5 piece kit with one of each removable terminal)	7ML1830-1PB
Wall/Pipe mount plate	7ML1830-1PC
Enclosure (include blank label)	7ML1830-1PD
SITRANS LUT400 Lid (with Display)	7ML1830-1PE
SITRANS LUT400 Lid (blank)	7ML1830-1PF
Fuse - AC (0.25 A, 250 V, Slow Blow)	7ML1830-1PG
Fuse - DC (1.6 A, 125 V, Slow Blow)	7ML1830-1PH
Battery BR2032	7ML1830-1PJ
Panel mount gasket and fastener kit	7ML1830-1PK
DIN-rail clip	7ML1830-1PL

We can offer shorter delivery times for configurations designated with the Quick Ship Symbol. For details see page 9/5 in the appendix.

3/12/18

© Siemens AG 2015

Dimensional drawings

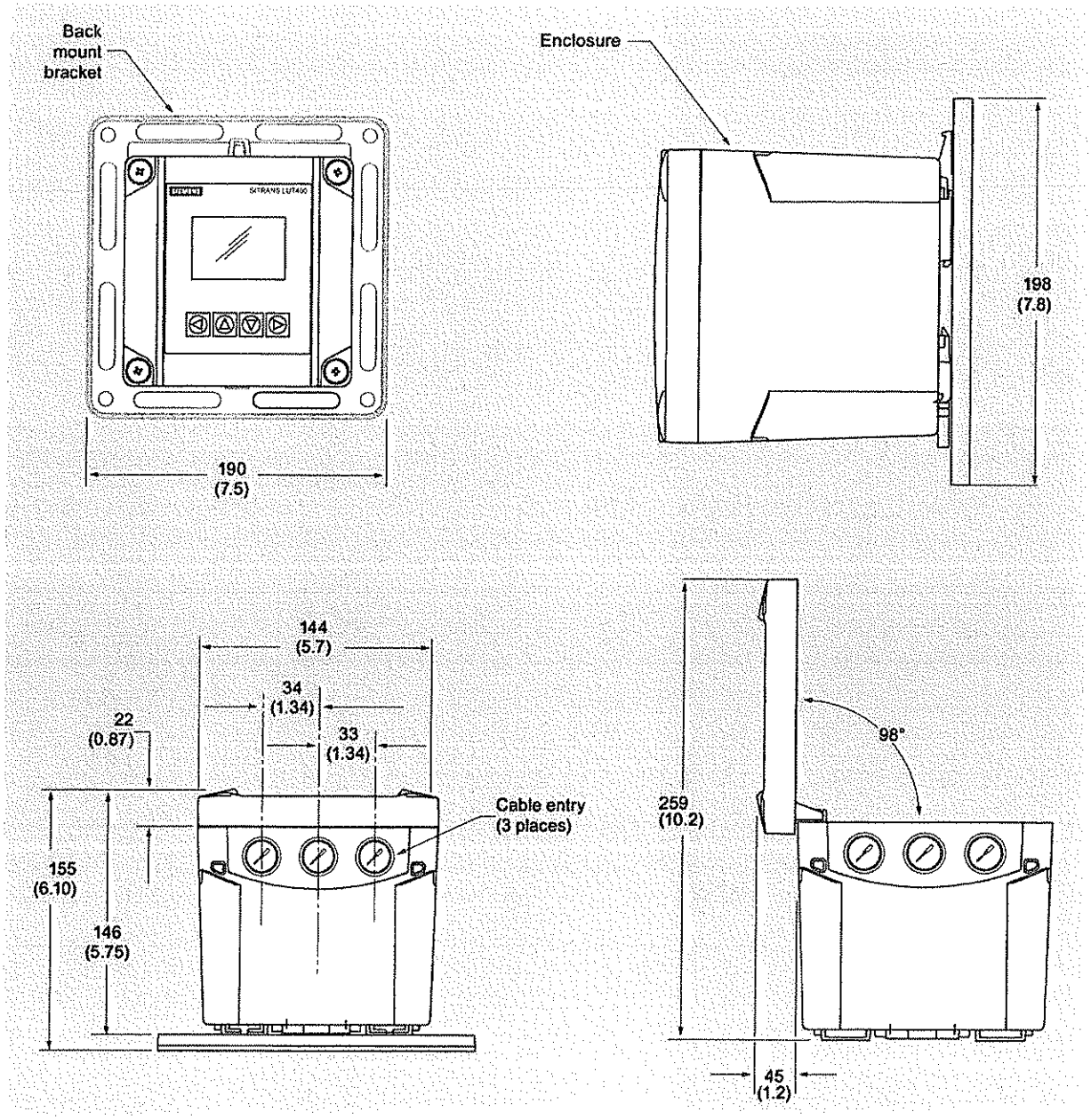

SITRANS LUT400, dimensions in mm (inch)

© Siemens AG 2015

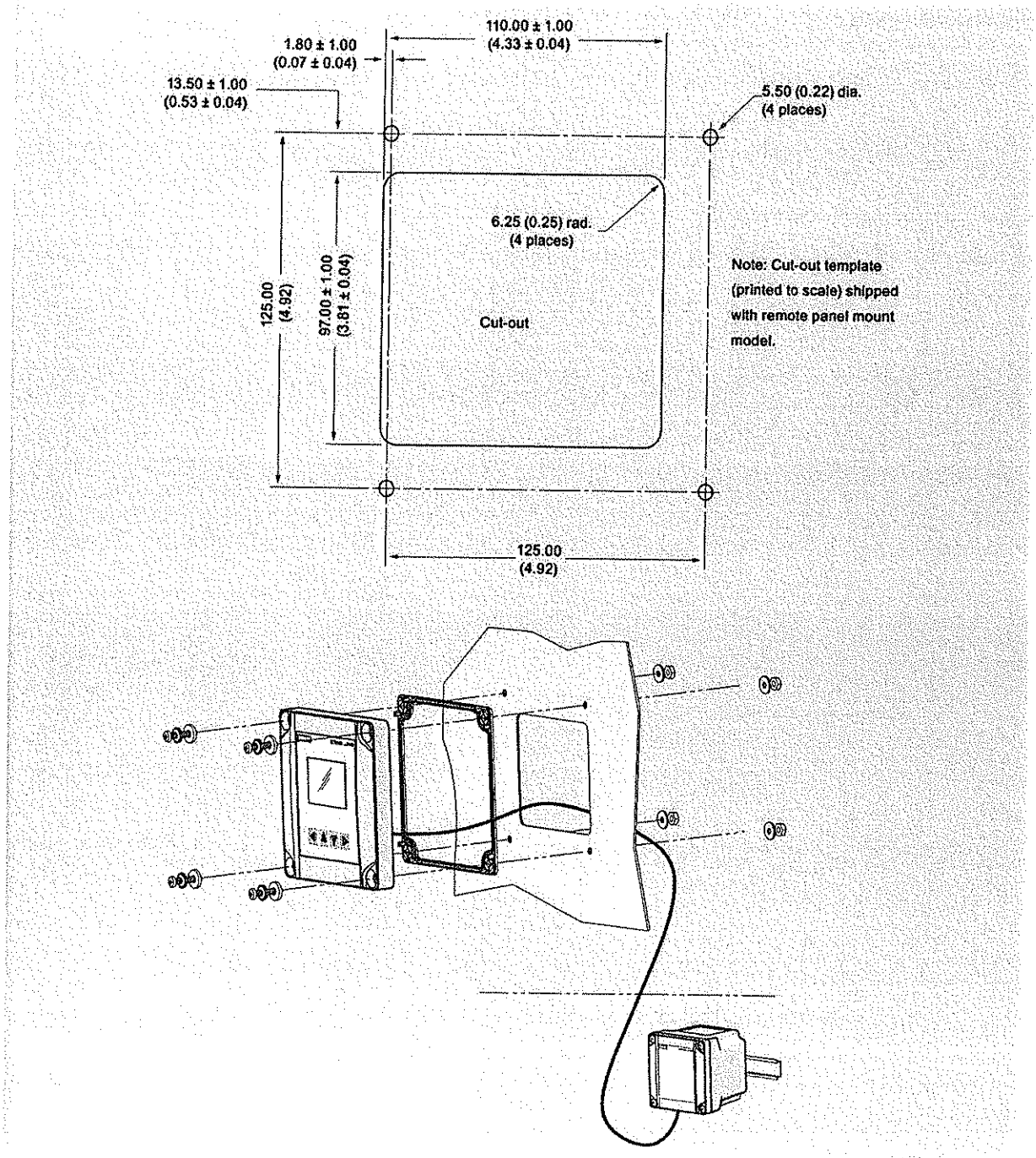

SITRANS LUT400, dimensions in mm (inch)

© Siemens AG 2015

Schematics

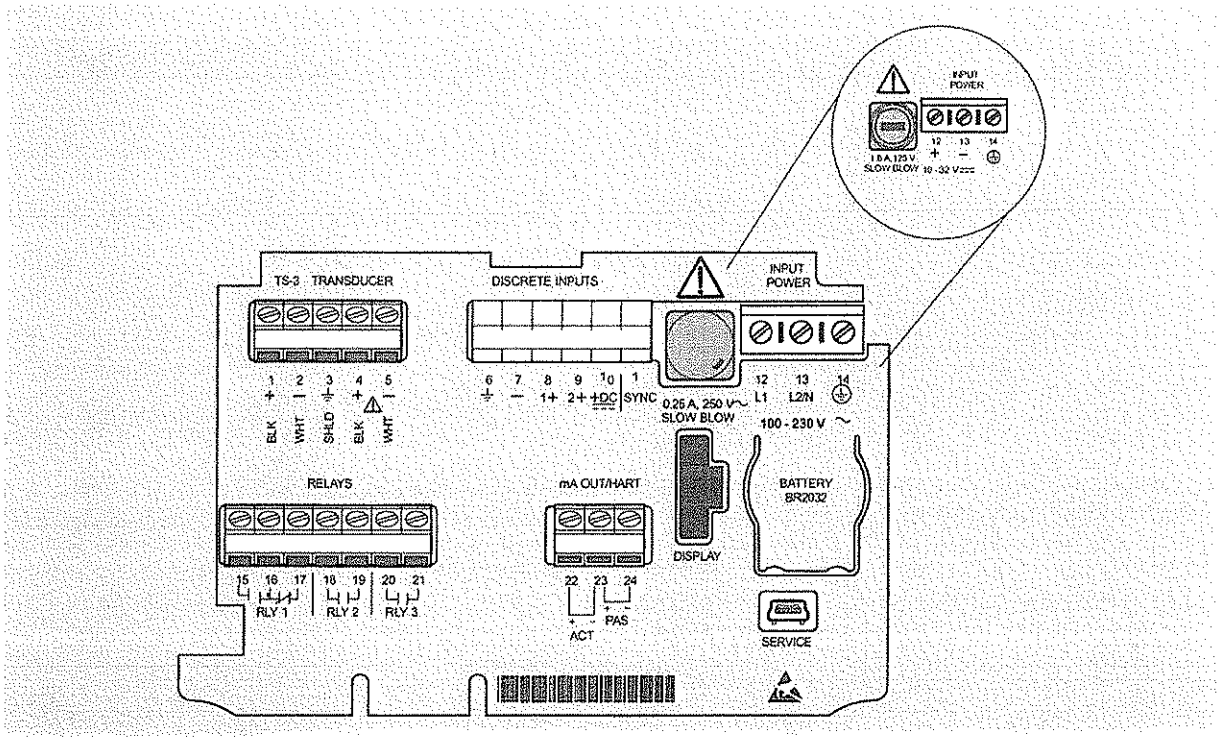

SITRANS LUT400 connections

© Siemens AG 2015

Level Measurement

Continuous level measurement - Ultrasonic transducers

Overview

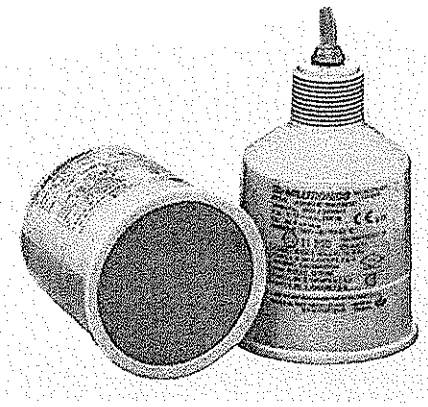

EchoMax XRS-5 ultrasonic transducer provides reliable, continuous level monitoring of liquids and slurries in narrow lift stations/ wet wells, flumes, weirs and filter beds using a beam angle of just 10° and a CSM rubber face.

Benefits

- Narrow beam angle of only 10°
- Chemically resistant PVDF copolymer enclosure and CSM rubber face
- Measuring range: 8 m (26 ft) for measurement of liquids and slurries
- Fully submersible: IP68 degree of protection
- Easy installation with 1" NPT or R 1" BSPT connection

Application

The XRS-5 is non-contacting with a measuring range from 0.3 ... 8 m (1 ... 26 ft). Advanced echo processing ensures reliable data even in conditions with obstructions, turbulence and foam.

The hermetically sealed CSM rubber face and the PVDF copolymer enclosure are designed for maximum resistance to methane, salt water, caustics and harsh chemicals common to wastewater installations. With an IP68 degree of protection, this rugged sensor is fully submersible in the event of flood conditions. Use a submergence shield if full submergence is possible in the application. A submergence shield will maintain a high level reading output during submerged conditions.

The low-cost XRS-5 transducer is compatible with a full range of Siemens controllers, from a basic system for high/low alarm or simple pump control, up to advanced control systems with communications, telemetry and SCADA integration capabilities.

- Key Applications: wet wells, flumes, weirs, filter beds

Technical specifications

Mode of operation	
Measuring principle	Ultrasonic transducer
Input	
Measuring range	0.3 ... 8 m (1 ... 26 ft), dependent on application
Output	
Frequency	44 kHz
Beam angle	10°
Accuracy	
Temperature error	Compensated by integral temperature sensor
Rated operating conditions	
Vessel pressure	Normal atmospheric pressure
Ambient conditions	
• Ambient temperature	-20 ... +65 °C (-4 ... +149 ° F)
Design	
Weight (approximate shipping weight of sensor with standard cable length)	1.2 kg (2.6 lb)
Material (enclosure)	PVDF copolymer enclosure and CSM face
Process connection	1" NPT [(Taper), ANSI/ASME B1.20.1] or R 1" [(BSPT), EN 10226]
Degree of protection	IP65/IP68
Cable connection	2-core shielded/twisted, 0.5 mm^2 (20 AWG), PVC sheath
Cable (max. length)	• 365 m (1 200 ft) with RG 62 A/U coaxial cable • 365 m (1 200 ft) with 2-core twisted pair, foil shield, 0.5 mm^2 (20 AWG), PVC sheath, only for MultiRanger 100/200
Options	
Flange version	Factory flange with PTFE face for ASME, EN or JIS configuration
Submergence shield	For applications with flooding possible
Certificates and approvals	CE, RCM, KCC CSA Class I, Div. 2, Groups A,B,C,D, Class II, Div. 1 Groups E,F,G FM Class I, Zone 1, AEx m IIC, T6 Class II, III, Div. 1, Groups E,F,G T6 ATEX II 2GD / IECEx / INMETRO Ex mb IIC T6 Gb, Ex tb IIIC T85 °C Db

© Siemens AG 2015

Selection and Ordering data		Article No.
EchoMax XRS-5 transducer	↗	**7ML1106-**
With a beam angle of 10°, the XRS-5 provides reliable, continuous level monitoring of liquids and slurries in narrow lift stations/wet wells, flumes, weirs and filter beds. Measuring range: min. 0.3 m (1 ft), max. 8 m (26 ft) ↗ Click on the Article No. for the online configuration in the PIA Life Cycle Portal.		**0 - 0**
Process connection		
1" NPT [(Taper), ANSI/ASME B1.20.1]	☆	**1**
R 1" [(BSPT), EN 10226]	☆	**2**
Cable length		
5 m (16.40 ft)	☆	**A**
10 m (32.81 ft)	☆	**B**
30 m (98.43 ft)		**C**
Facing		
Standard (CSM rubber)	☆	**A**
PTFE (flange versions)		**B**
Approvals		
CE, RCM, KCC, CSA Class I, Div. 2, Groups A,B,C,D, Class II, Div. 1 Groups E,F,G FM Class I, Zone 1, AEx m IIC, T6 Class II, III, Div. 1, Groups E,F,G T6 ATEX II 2GD / IECEx / INMETRO Ex mb IIC T6 Gb, Ex tb IIIC T85 °C Db	☆	**2**
Mounting flange (flush mount)		
None	☆	**A**
3" ASME, 150 lb, flat faced		**B**
4" ASME, 150 lb, flat faced		**C**
6" ASME, 150 lb, flat faced		**D**
DN 80, PN 10/16, Type A, flat faced		**J**
DN 100, PN 10/16, Type A, flat faced		**K**
DN 150, PN 10/16, Type A, flat faced		**L**
JIS10K 3B style		**Q**
JIS10K 4B style		**R**
JIS10K 6B style		**S**
Note: Flange bolting patterns and facings dimensionally correspond to the applicable ASME B16.5 or EN 1092-1, or JIS B 2220 standard.		
Operating Instructions		Article No.
Quick Start Manual, multi-language		**A5E32299685**
Applications Guidelines, multi-language		**7ML1998-5HV61**
Note: The Applications Guidelines should be ordered as a separate line item on the order.		
This device is shipped with the Siemens Milltronics manual DVD containing the ATEX Quick Start and Operating Instructions library.		

☆ We can offer shorter delivery times for configurations designated with the Quick Ship Symbol ☆. For details see page 9/5 in the appendix.

Selection and Ordering data		Order code
Further designs		
Please add "-Z" to Article No. and specify Order code(s).		
Acrylic coated, stainless steel tag [13 x 45 mm (0.5 x 1.75 inch)]; Measuring-point number/ identification (max. 16 characters) specify in plain text	☆	**Y17**
Accessories		Article No.
Tag, stainless steel with hole, 12 x 45 mm (0.47 x 1.77 inch), one text line for fastening on sensors		**7ML1930-1BJ**
Submergence shield kit		**7ML1830-1BH**
Easy Aimer 2, aluminum, NPT with ¾" x 1" PVC coupling		**7ML1830-1AQ**
Easy Aimer 2, aluminum with M20 adapter and 1" and 1½" BSPT aluminum couplings		**7ML1830-1AX**
Easy Aimer 304, NPT with 1" stainless steel coupling		**7ML1830-1AU**
Easy Aimer 304, with M20 adapter and 1" and 1½" BSPT 304 stainless steel couplings		**7ML1830-1GN**
FMS-200 universal box bracket, mounting kit		**7ML1830-1BK**
FMS-210 channel bracket, wall mount		**7ML1830-1BL**
FMS-220 extended channel bracket, wall mount		**7ML1830-1BM**
FMS-310 channel bracket, floor mount		**7ML1830-1BN**
FMS-320 extended channel bracket, floor mount		**7ML1830-1BP**
FMS-350 bridge channel bracket, floor mount (see Mounting Brackets on page 4/187 for more information)		**7ML1830-1BQ**
1" NPT locknut, plastic		**7ML1830-1DS**
1" BSPT locknut, plastic		**7ML1830-1DR**

☆ We can offer shorter delivery times for configurations designated with the Quick Ship Symbol ☆. For details see page 9/5 in the appendix.

© Siemens AG 2015

Selection and Ordering data		Article No.
EchoMax XRS-5C transducer With a beam angle of 10°, the XRS-5 provides reliable, continuous level monitoring of liquids and slurries in narrow lift stations/wet wells, flumes, weirs and filter beds. Measuring range: min. 0.3 m (1 ft), max. 8 m (26 ft) ↗ Click on the Article No. for the online configuration in the PIA Life Cycle Portal.	↗	**7ML1105-** ▪▪▪▪ **1 - 0** ▪▪
Process connection 1" NPT [(Taper), ANSI/ASME B1.20.1]	✲	**1**
Cable length 5 m (16.40 ft) 10 m (32.81 ft) 30 m (98.43 ft)	✲ ✲	**A** **B** **C**
Facing Standard (CSM rubber) PTFE (flange versions)	✲	**A** **B**
Approvals CSA Class I Div. 1, Groups A,B,C,D; Class II Div. 1, Groups E,F,G; Class III	✲	**1**
Mounting flange (flush mount) None 3" ASME, 150 lb, flat faced 4" ASME, 150 lb, flat faced 6" ASME, 150 lb, flat faced Note: Flange bolting patterns and facings dimensionally correspond to the applicable ASME B16.5 or EN 1092-1, or JIS B 2220 standard.	✲	**A** **B** **C** **D**
Operating Instructions		Article No.
Quick Start Manual, multi-language		**A5E32299685**
Applications Guidelines, multi-language Note: The Applications Guidelines should be ordered as a separate line item on the order.		**7ML1998-5HV61**
This device is shipped with the Siemens Milltronics manual DVD containing the ATEX Quick Start and Operating Instructions library.		

✲ We can offer shorter delivery times for configurations designated with the Quick Ship Symbol ✲. For details see page 9/5 in the appendix.

Selection and Ordering data		Order code
Further designs Please add "**-Z**" to Article No. and specify Order code(s).		
Acrylic coated, stainless steel tag [13 x 45 mm (0.5 x 1.75 inch)]: Measuring-point number/ identification (max. 16 characters) specify in plain text	✲	**Y17**
Accessories		Article No.
Submergence shield kit		**7ML1830-1BH**
Easy Aimer 2, aluminum, NPT with ¾" x 1" PVC coupling		**7ML1830-1AQ**
Easy Aimer 304, NPT with 1" stainless steel coupling		**7ML1830-1AU**
FMS-200 universal box bracket, mounting kit		**7ML1830-1BK**
FMS-210 channel bracket, wall mount		**7ML1830-1BL**
FMS-220 extended channel bracket, wall mount		**7ML1830-1BM**
FMS-310 channel bracket, floor mount		**7ML1830-1BN**
FMS-320 extended channel bracket, floor mount		**7ML1830-1BP**
FMS-350 bridge channel bracket, floor mount (see Mounting Brackets on page 4/187 for more information)		**7ML1830-1BQ**

✲ We can offer shorter delivery times for configurations designated with the Quick Ship Symbol ✲. For details see page 9/5 in the appendix.

© Siemens AG 2015

Dimensional drawings

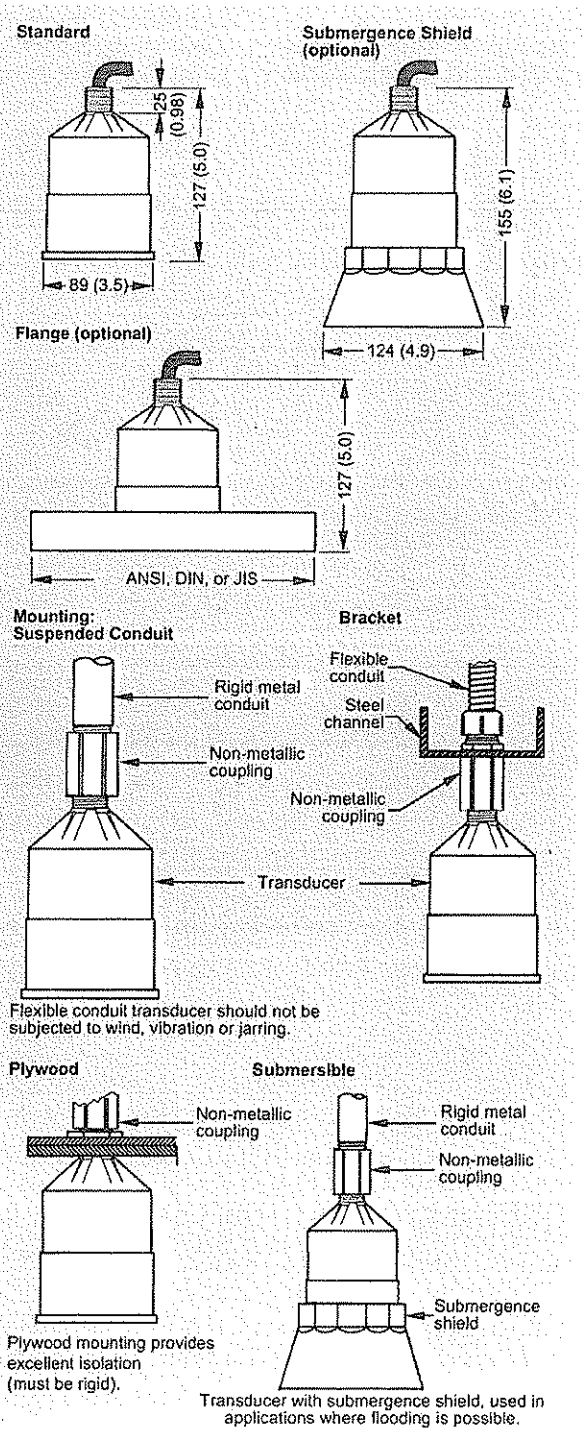

XRS-5 ultrasonic transducer, dimensions in mm (inch)

Schematics

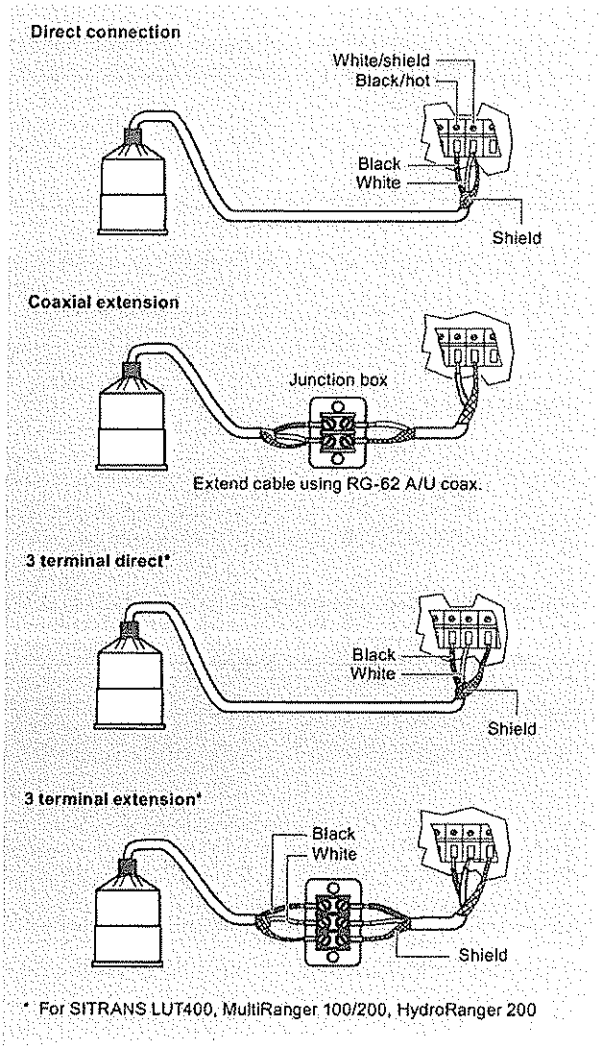

XRS-5 ultrasonic transducer connections

CERTIFICATE OF REGISTRATION

This is to certify that

Siemens Canada Limited

Siemens Milltronics Process Instruments
1954 Technology Drive, P.O. Box 4225, Peterborough, Ontario K9J 7B1 Canada

operates a

Quality Management System

which complies with the requirements of

ISO 9001:2008

for the following scope of registration

Design, build, sell, distribute and service level measurement products, dry solids flow measurement products and process protection products.

Certificate No.:	CERT-0084161	Original Certification Date:	September 8, 1994
File No.:	002284	Current Certification Date:	November 22, 2014
Issue Date:	October 24, 2014	Certificate Expiry Date:	November 21, 2017

Chris Jouppi
President,
QMI-SAI Canada Limited

Samer Chaouk
Head of Policy, Risk and Certification

ISO 9001

Registered by:
SAI Global Certification Services Pty Ltd, 286 Sussex Street, Sydney NSW 2000 Australia with QMI-SAI Canada Limited, 20 Carlson Court, Suite 200, Toronto, Ontario M9W 7K6 Canada (SAI GLOBAL). This registration is subject to the SAI Global Terms and Conditions for Certification. While all due care and skill was exercised in carrying out this assessment, SAI Global accepts responsibility only for proven negligence. This certificate remains the property of SAI Global and must be returned to them upon request.
To verify that this certificate is current, please refer to the SAI Global On-Line Certification Register www.qmi-saiglobal.com/qmi_companies/

SAI GLOBAL

3/12/18

CERTIFICATE

This is to certify that

Siemens AG
Process Industries and Drives,
Process Automation
PD PA

Östliche Rheinbrückenstraße 50
76187 Karlsruhe
Germany

with the organizational units/sites as listed in the annex
has implemented and maintains a **Quality Management System**.

Scope:
Research & development, production, sales and services of products, solutions and systems for
- industrial communication and identification, process instrumentation and analytics, power supplies
- industry automation and engineering

Through an audit, documented in a report, it was verified that the management system fulfills the requirements of the following standard:

ISO 9001 : 2008

Certificate registration no.	000656 QM08
Date of revision	2015-02-23
Valid from	2015-02-23
Valid until	2018-02-21
Date of certification	2015-02-23

DAkkS
Deutsche
Akkreditierungsstelle
D-ZM-16074-01-00

DQS GmbH

G. Blechschmidt

Götz Blechschmidt
Managing Director

3/12/18

Accredited Body: DQS GmbH, August-Schanz-Straße 21, 60433 Frankfurt am Main

Annex to Certificate
Registration No. 000656 QM08

Siemens AG
Process Industries and Drives,
Process Automation

PD PA

Östliche Rheinbrückenstraße 50
76187 Karlsruhe
Germany

Locations

378142
Siemens AG
PD PA
Siemensallee 84
76187 Karlsruhe
Germany

398998
Siemens AG
PD PA
Industriepark Höchst, B 598
65926 Frankfurt am Main
Germany

378133
Siemens AG
PD PA
Gleiwitzer Straße 555
90475 Nürnberg
Germany

506457
Siemens AG
PD PA
Schweinfurter Str. 1
97080 Würzburg
Germany

020069
Siemens AG
PD PA
Siemensstraße 2-4
90766 Fürth
Germany

506456
Siemens AG
PD PA
Frauenauracher Str. 85
91056 Erlangen
Germany

072196
Siemens S.A.S.
PD PA MF-H
1, Chemin de la Sandlach
67500 Haguenau
France

519038
Siemens AG
PD PA
Karl-Legien-Str. 190
53123 Bonn
Germany

445233
Siemens Industry Software GmbH & Co. KG
PD PA
Kruppstraße 16
45128 Essen
Germany

This annex (edition: 2015-02-23) is only valid in connection with the above-mentioned certificate.

3/12/18

THE INTERNATIONAL CERTIFICATION NETWORK

CERTIFICATE

IQNet and
DQS GmbH Deutsche Gesellschaft zur Zertifizierung von Managementsystemen

hereby certify that the company

Siemens AG
Process Industries and Drives,
Process Automation

PD PA

Östliche Rheinbrückenstraße 50
76187 Karlsruhe
Germany

with the organizational units/sites as listed in the annex
has implemented and maintains a **Quality Management System**.

Scope:
Research & development, production, sales and services of products, solutions and systems for
- industrial communication and identification, process instrumentation and analytics, power supplies
- industry automation and engineering

Through an audit, documented in a report, it was verified that the management system
fulfills the requirements of the following standard:

ISO 9001 : 2008

Date of revision 2015-02-23
Valid from 2015-02-23
Valid until 2018-02-21
Date of certification 2015-02-23

Registration number: DE-000656 QM08

President of IQNet *Managing Director of DQS GmbH*

IQNet Partners*:

AENOR *Spain* AFNOR Certification *France* AIB-Vinçotte International *Belgium* ANCE-SIGE *Mexico* APCER *Portugal* CCC *Cyprus*
CISQ *Italy* CQC *China* CQM *China* CQS *Czech Republic* Cro Cert *Croatia* DQS Holding GmbH *Germany*
FCAV *Brazil* FONDONORMA *Venezuela* ICONTEC *Colombia* IMNC *Mexico* Inspecta Certification *Finland* IRAM *Argentina*
JQA *Japan* KFQ *Korea* MIRTEC *Greece* MSZT *Hungary* Nemko AS *Norway* NSAI *Ireland* PCBC *Poland*
Quality Austria *Austria* RR *Russia* SII *Israel* SIQ *Slovenia* SIRIM QAS International *Malaysia*
SQS *Switzerland* SRAC *Romania* TEST St Petersburg *Russia* TSE *Turkey* YUQS *Serbia*

IQNet is represented in the USA by: AFNOR Certification, CISQ, DQS Holding GmbH and NSAI Inc.

* The list of IQNet partners is valid at the time of issue of this certificate. Updated information is available under www.iqnet-certification.com

3/12/18

THE INTERNATIONAL CERTIFICATION NETWORK

Annex to IQNet Certificate Number: 000656 QM08

Siemens AG
Process Industries and Drives,
Process Automation

PD PA

Östliche Rheinbrückenstraße 50
76187 Karlsruhe
Germany

Locations

378142
Siemens AG
PD PA
Siemensallee 84
76187 Karlsruhe
Germany

398998
Siemens AG
PD PA
Industriepark Höchst, B 598
65926 Frankfurt am Main
Germany

378133
Siemens AG
PD PA
Gleiwitzer Straße 555
90475 Nürnberg
Germany

506457
Siemens AG
PD PA
Schweinfurter Str. 1
97080 Würzburg
Germany

020069
Siemens AG
PD PA
Siemensstraße 2-4
90766 Fürth
Germany

506456
Siemens AG
PD PA
Frauenauracher Str. 85
91056 Erlangen
Germany

072196
Siemens S.A.S.
PD PA MF-H
1, Chemin de la Sandlach
67500 Haguenau
France

519038
Siemens AG
PD PA
Karl-Legien-Str. 190
53123 Bonn
Germany

445233
Siemens Industry Software GmbH & Co. KG
PD PA
Kruppstraße 16
45128 Essen
Germany

This annex (edition: 2015-02-23) is only valid in connection with the above-mentioned IQNet Certificate.

3/12/18

BUREAU VERITAS
Certification

Certificate

for

Huba Control Ltd.

5436 Würenlos / Switzerland

Bureau Veritas Certification hereby confirms that the management system of the above-mentioned organisation has been assessed and complies with the requirements set out in the following standards / regulations.

Standards/Regulations:

SN EN ISO 9001 : 2008

The management system comprises:

Design and production of sensors

Date of initial certification: **11.05.1995**

The requirements of the standards/regulations must be complied with throughout the period of validity of this certificate. This will be ensured through regular monitoring by Bureau Veritas Certification.

Date of certification: **04.12.2014** Valid until: **03.12.2017**

Bureau Veritas Certification will provide information on the validity of this certificate on request at any time. Additional information on the management system and the area of applicability should be obtained from the organisation itself.

Certificate number: **CH8484729** Date: **04.12.2014**

Pascal Singh

Bureau Veritas Certification (Switzerland) AG,
Grossächerstrasse 25, CH-8104 Weiningen ZH

SCESm 003

3/12/18

AS950
PORTABLE SAMPLER

Applications

- Wastewater
- Collection systems
- Industrial pretreatment
- Environmental monitoring
- Stormwater

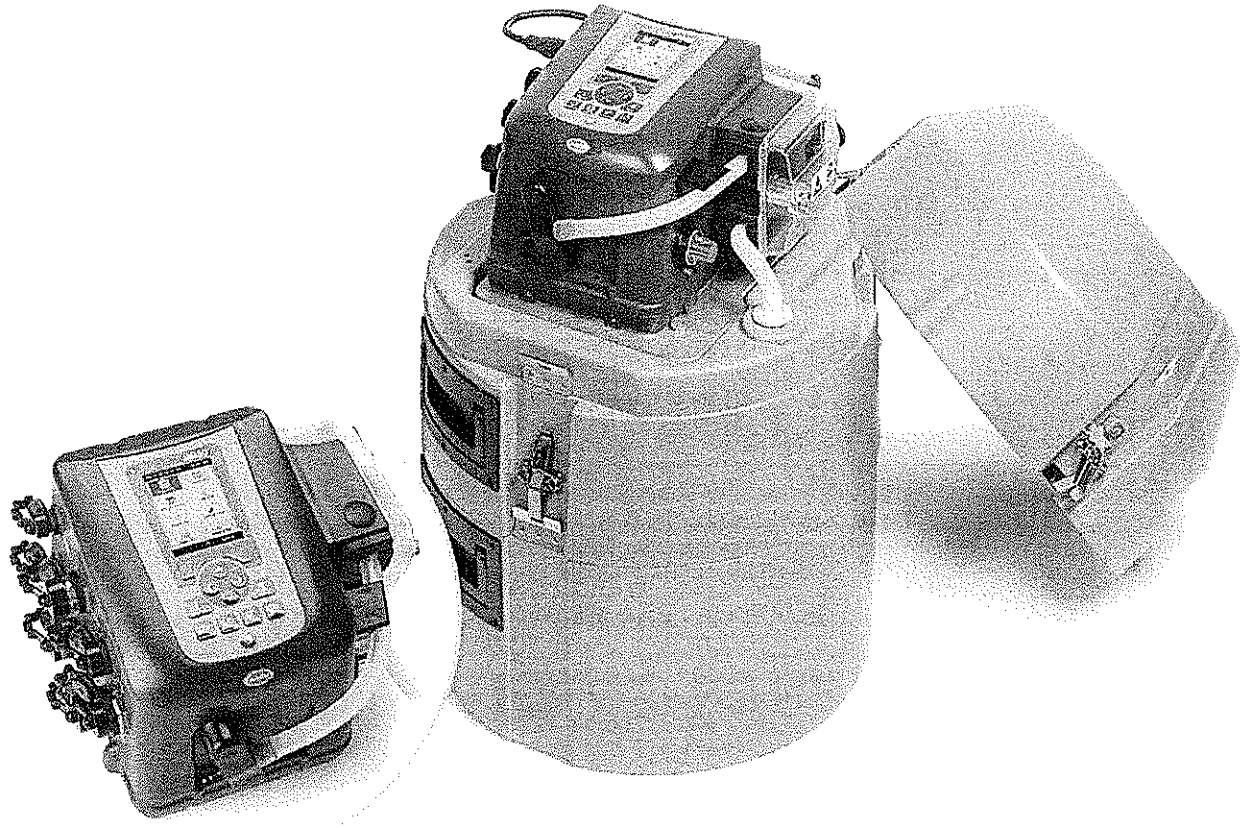

Sampling has never been this easy.

HACH LANGE's AS950 sampler controller makes programming, data transfer and operation more intuitive and error-free.

Easiest and most intuitive operation

The large full colour display and intuitive programming give you access to all your programmable criteria on a single screen - eliminating scrolling through menus and supporting error-free operation.

Most convenient data transfer and programming available

The AS950 is the only sampler that utilises a USB drive to upload and download data and copy programs from one sampler to another.

Confidence in your sampling process

The program status screen instantly communicates alarms, missed samples and program progress for quick and easy troubleshooting.

Field convertible for compact or discrete sampling

Weighing only 12.7 kg, the AS950 portable sampler is designed for accuracy and convenience. Quickly switch between composite and discrete sampling in the field. Configurable for single or multiple bottle applications, it is specifically designed for use in 18-inch manholes.

Easy maintenance at low cost

Spring-mounted rollers provide long tubing life keeping maintenance costs low. The desiccant and pump tubing can easily be accessed; the replacement is possible without any tools. The rugged see-through pump cover is made for a quick visual inspection.

3/12/18

HACH LANGE

Technical Data*

AS950 Portable Sampler

Housing material	Impact resistant ABS plastic, 3-section construction Double-walled base with 2.54 cm insulation, direct ice contact with bottles (Sampler)
Temperature	Operating: 0 - 49 °C Storage: -40 - 60 °C
Power requirements (Voltage)	12 V DC
Dimensions (W x H x D)	Standard Base: 50.5 cm x 69.4 cm Compact Base: 44.1 cm x 61 cm Composite Base: 50.28 cm x 79.75 cm
Weight	Standard: 15 kg with (24) 1 L Polyethylene bottles; 14.8 kg with 10 L Polyethylene bottle Compact Base: 12.2 kg with (24) 575 mL Polyethylene bottles; 12.9 kg with 10 L Polyethylene bottle Composite Base: 15 kg with (1) 21 L Polyethylene bottle

AS950 Controller

Housing material	PC/ABS blend, NEMA 4X, 6, IP68, corrosion and ice resistant (Controller)
Display	1/4 VGA, Colour; self-prompting/ menu-driven program
User interface	Membrane switch keypad with 2 multiple function soft keys
Languages user interface	English, French, Spanish, Italian, German, Portuguese, Chinese
Lock function	Access code protection prevents tampering
Memory	Sample history: 4000 records; Data log: 325,000 records; Event log: 2000 records
Communication capabilities	USB and optional RS485 (MODBUS)
Inputs	One 0/4-20 mA input for flow pacing
Certifications	CE, UL

Sample container

STANDARD BASE CAPACITY:

(24) 1 L Polyethylene or 350 mL Glass bottles

(8) 2.3 L Polyethylene or 1.9 L Glass bottles

(4) 3.8 L Polyethylene or 3.8 L Glass bottles

(2) 3.8 L Polyethylene or 3.8 L Glass bottles

(1) 21 L Polyethylene composite bottle or

(1) 15 L Polyethylene composite bottle or

(1) 20 L Polyethylene composite bottle or

(1) 10 L Polyethylene or 10 L Glass composite bottle

COMPACT BASE CAPACITY:

(24) 575 mL Polyethylene bottles

(8) 950 mL Glass bottles

(1) 10 L Polyethylene or 10 L Glass bottle

COMPOSITE BASE CAPACITY:

(1) 21 L Polyethylene bottle

ICE CAPACITY:

Compact Base: 3.9 kg with (24) 575 mL PE bottles

Standard Base: 14.5 kg with (24) 350 mL Glass bottles

**Subject to change without notice.*

3/12/18

Technical Data*

Sampling Features

Programs

Dual Programs: Up to 2 sample programs can be run sequentially, in parallel, or according to day of week scheduling; enabling a single sampler to function like multiple samplers

Sampling mode

Pacing: Time weighted, Flow weighted, Time table, Flow table, Event

Distribution: Single bottle composite, multi-bottle composite, multi-bottle discrete, bottles per sample, samples per bottle or a combination of bottles per sample and samples per bottle

Operating mode

Continuous or non-continuous

Status messages

Communicates what program is running, if there are any missed samples, when the next sample will be taken, how many samples remain, number of logged channels, time of last measurement, memory available, number of active channels, if alarms were triggered, when alarms were triggered, active sensors and cabinet temperature

Alarm

Configurable alarms that show on status screen and are recorded in diagnostics alarm logs. Alarms can be set for system diagnostics and logging such as program end, sample complete, missed samples and full bottle. Channel alarms are setpoint alarms for the recorded measurements (channels), such as pH, level and power supply voltage.

Manual sampling

Initiates a sample collection independent of program in progress

Automatic shutdown

Multiple Bottle Mode: After complete revolution of distributor arm (unless Continuous Mode is selected)

Composite Mode: After preset number of samples have been delivered to composite container, from 1 to 999 samples, or upon full container.

Sample volume

Programmable in 10 mL increments from 10 to 10,000 mL

Sample interval

Selectable in single increments from 1 to 9999 flow pulses or 1 to 9999 minutes in one minute increments

Sample trigger

When equipped with flow sensor or pH/temperature sensor or peripheral monitoring options, sampling can be triggered upon an upset condition when field selectable limits are exceeded

Data logging

SAMPLE HISTORY - Stores up to 4000 entries for sample time stamp, bottle number and sample status (success, bottle full, rinse error, user abort, distributor error, pump fault, purge fail, sample timeout, power fail and low main battery).

MEASUREMENTS - Stores up to 325,000 entries for selected measurement channels in accordance with the selected logging interval.

EVENTS - Ability to store up to 2000 entries in Sample History logging. Records Power On, Power Fail, Firmware Updated, Pump Fault, Distributor Arm Error, Low Memory Battery, Low Main Battery, User On, User Off, Program Started, Program Resumed, Program Halted, Program Completed, Grab Sample, Tube Change Required, Sensor Communication Errors, Cooling Failed, Heating Failed, Thermal Error Corrected.

Diagnostics

View event and alarm logs as well as maintenance diagnostics

**Subject to change without notice.*

3/12/18

Technical Data*

Sample Pump and Strainer

Sample pump

High-speed peristaltic, dual roller, with 0.95 ID x 1.6 OD cm (3/8" ID x 5/8" OD) pump tube;

Pump body IP37, Polycarbonate cover

Vertical lift

8.5 m using 8.8 m maximum of 3/8" Vinyl intake tube at sea level at 20 to 25 °C

Tubing

Pump tubing: 9.5 mm ID x 15.9 mm OD Silicone

Intake tubing: 1.0 - 4.75 m minimum length, 1/4" or 3/8" ID Vinyl or 3/8" ID Teflon-lined Polyethylene with protective outer cover (black or clear)

Sample volume repeatability

Typical: ±5% of 200 mL sample volume with: 4.6 m vertical lift, 4.9 m of 3/8" Vinyl intake tube, single bottle, full bottle shut-off at room temperature and 1524 m elevation

Sample volume accuracy

Typical: ±5% of 200 mL sample volume with: 4.6 m vertical lift, 4.9 m of 3/8" Vinyl intake tube, single bottle, full bottle shut-off at room temperature and 1524 m elevation

Sample transport velocity

0.9 m/s with 4.6 m vertical lift, 4.9 m of 3/8" Vinyl intake tubing, 21 °C and 1524 m elevation

Pump flow rate

4.8 L/min at 1 m vertical lift with 3/8" intake tube typical

Internal clock

±1 second per day at 25 °C

Intake

Strainers: Choice of Teflon and 316 Stainless Steel construction, or all 316 Stainless Steel in standard size, high velocity, and low profile for shallow depth applications

Purge: Air purged automatically before and after each sample; duration automatically compensates for varying intake line lengths

Rinse: Intake line automatically rinsed with source liquid prior to each sample, from 1 to 3 rinses

Retries or Fault: Sample collection cycle automatically repeated from 1 to 3 times if sample not obtained on initial attempt

**Subject to change without notice.*

Dimensions

The AS950 Portable Sampler is designed for indoor or outdoor use. No secondary enclosure is required when operated within the specified temperature range. The sampler consists of three main sections - the top cover, the center control system, and the bottle/base section held together by Stainless Steel latches which serve as the connection point for the optional suspension harness. The lockable top cover protects the controller from extreme weather and unauthorized use.

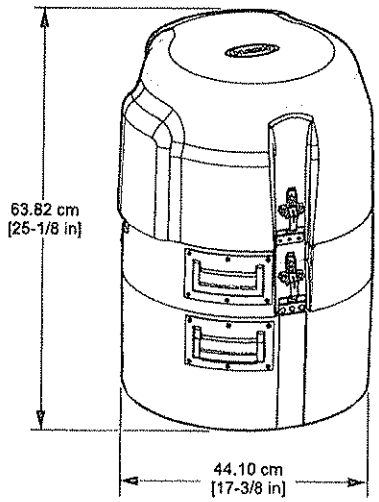

Compact Base

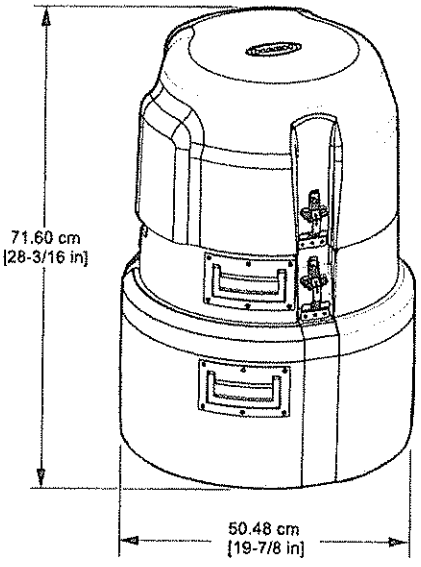

Standard Base

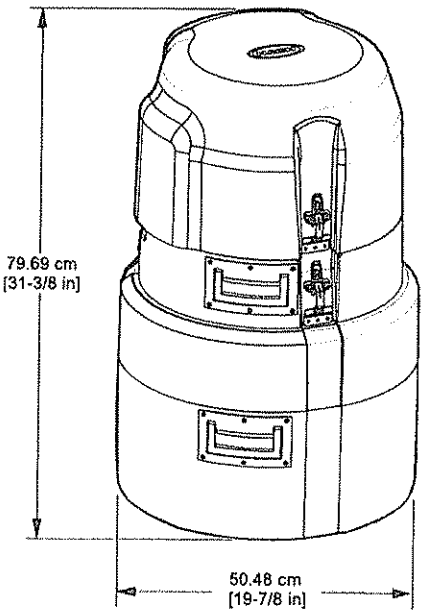

Composite Base

3/12/18

Order Information

ASP.XXXXXXXXXX	AS950 Portable Sampler Portable Sampler with AS950 Controller, available in various configurations and with several factory installed options. Please contact HACH LANGE for more information.

Controller and Base Options

8975	Compact insulated base for AS950 Portable Sampler
8976	Standard insulated base for AS950 Portable Sampler
8561	Composite insulated base for AS950 Portable Sampler

Bottle Options and Accessories

1918	10 L Polyethylene bottle, with cap
6494	20 L Polyethylene bottle, with cap
737	Set of (24) 1 L Polyethylene bottles, with caps
1369	Set of (24) 575 mL Polyethylene bottles, with caps
2348	Set of (8) 950 mL Glass bottles, with Teflon-lined caps
2189	Retainer for (24) 350 mL Glass bottles
1422	Retainer for (8) 1.9 L Glass / (8) 2.3 Polyethylene bottles or (24) 350 mL Glass / (24) 575 mL Polyethylene bottles
2347	Retainer for (8) 950 mL Glass bottles
1502	Container support
8996	Retainer/full container shut-off

Distributors

8582	Distributor with arm for 24 bottle standard base and 12 bottle compact base
8580	Distributor with arm for 24 bottle compact base
8584	Distributor with arm for 2, 4 and 8 bottle standard base and 8 bottle compact base

Tubing and Strainers

920	7 m Vinyl intake tubing, 3/8" ID
922	7 m Teflon-lined Polyethylene tubing, 3/8" ID (requires Connection Kit 2186)
926	Strainer, Teflon/Stainless Steel
2070	Strainer, 316 Stainless Steel
2071	Strainer, for shallow depth applications, 316 Stainless Steel
2186	Connector Kit, for Teflon-lined Polyethylene tubing
4652	Strainer, high velocity and shallow depth
4600-15	Pump tubing, 4.5 m
4600-50	Pump tubing, 15 m
8964	Pump tube insert
9501400	Pump tube insert, non-contact liquid detect

Factory Installed Options

TWO SENSOR PORTS
Accepts HACH LANGE digital Differential pH, HACH LANGE digital AV9000 analyser with submerged area velocity flow and/or HACH LANGE digital US9000 ultrasonic level sensors

RAIN/RS485 PORT
Accepts HACH LANGE Rain Gauge (not included) or can be used as RS485 communications

NON-CONTACT LIQUID DETECT
Sample volume accuracy for applications that require complete tubing replacement

Please contact your local HACH LANGE representative for details.

Inputs/Outputs

9494500	IO9001 Module (connects through auxiliary port), includes 1 relay (high voltage)
9494600	IO9004 Module (connects through auxiliary port), includes multiple 0/4-20 mA outputs and inputs

Accessories

1355	Suspension harness (suspends the sampler)
9542	Manhole support bracket/spanner, 18 to 28 inches
9557	Manhole support bracket/spanner, 28 to 48 inches
5713000	Manhole support bracket, 18 to 27 inches
6987	Weatherguard fiberglass enclosure, 89 cm x 89 cm x 86 cm
6992	Weatherguard fiberglass enclosure, 91 cm x 66 cm x 135 cm
8713200	Solar Module, with 10 W panel and 12 VDC regulator
8754400	12 V Lead Acid battery with 3 pin connector
8753500EU	EU Charger, Lead Acid, 3 pin, 230 V
8754500EU	Power supply, 3 pin connector, 230 V, EU plug
9504700EU	USB cable, A to A (EU)

DOC053.52.35023.Jan15

3/12/18

Certificate

Standard	**ISO 9001:2008**
Certificate Registr. No	01 100 4412

Certificate Holder

HACH LANGE GmbH
Königsweg 10 • D - 14163 Berlin

including the locations:

HACH LANGE GmbH
Willstätterstraße 10 • D - 40549 Düsseldorf

Scope

development, manufacture, sales and service
of measuring systems for water analysis
inclusively retraction of used reagents and
their environmentally responsible disposal

Proof has been furnished by means of an audit that the
requirements of ISO 9001 2008 are met

Validity

The certificate is valid from 2016-02-22 until 2018-09-14
First certification 1995

2016-02-18

TÜV Rheinland Cert GmbH
Am Grauen Stein · 51105 Köln

www.tuv.com

DAkkS

TÜVRheinland

3/12/18

3/12/10

2. SEPTAGE UNIT

3/12/18

© Siemens AG 2015

Flow Measurement
SITRANS F M

Flow sensor MAG 5100 W

Overview

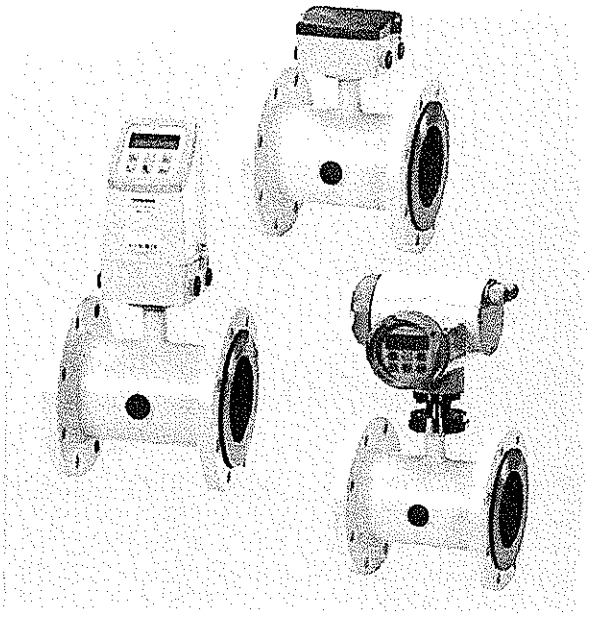

The SITRANS F M MAG 5100 W is an electromagnetic flow sensor designed to meet ground water, drinking water, waste water, sewage or sludge applications.

Benefits

- DN 15 to DN 1200 / 2000 (½" to 48"/78")
- Stock program of MAG 5100 W secures short delivery time
- Connection flanges EN 1092-1 (DIN 2501), ANSI, AWWA, AS and JIS.
- NBR Hard Rubber and Ebonite Hard Rubber liner for all water applications
- EPDM liner with drinking water approvals
- Hastelloy integrated grounding and measuring electrodes
- Increased low flow accuracy for water leak detection, due to coned liner design (Article No. 7ME6520, DN 15 to 300 mm (½" to 12")).
- Drinking water approvals
- Suitable for direct burial and constant flooding
- Custody transfer approvals
- Build-in length according to ISO 13359; the standard includes sizes up to DN 400.
- Easy commissioning, SENSORPROM unit automatically uploads calibration values and settings.
- Designed so patented in-situ verification can be conducted. Using SENSORPROM fingerprint.
- Custody Transfer option for water billing, with type approval after OIML R 49 and verified according to MI-001 - 0D inlet/ 0D outlet installation
  - pattern approval OIML R 49 (Denmark, Germany)
  - conforms to ISO 4064 and EN 14154 for mechanical flowmeters
  - PTB K7.2
- FM Fire Service Meter (Class Number 1044) for automatic fire protection systems
- Meets EEC directives: PED, 97/23/EC pressure directive for EN1092-1 flanges
- Simple onsite or factory upgrade to IP68/NEMA 6P of a standard sensor
- MCERTS approval for UK environmental market

Application

The main applications of the SITRANS F M electromagnetic flow sensors can be found in the following fields:

- Water abstraction
- Water treatment
- Water distribution network (leak detection management)
- Custody transfer water meters
- Irrigation
- Waste water treatment
- Filtration plant (e.g. reverse osmosis and ultra filtration)
- Industrial water applications

Mode of operation

The flow measuring principle is based on Faradays law of electromagnetic induction according to which the sensor converts the flow into an electrical voltage proportional to the velocity of the flow.

Integration

The complete flowmeter consists of a flow sensor and an associated transmitter SITRANS F M MAG 5000, MAG 6000 or MAG 6000 I.

The flexible communication concept USM II simplifies integration and update to a variety of fieldbus systems, e.g. HART, DeviceNet, PROFIBUS DP and PA, FOUNDATION Fieldbus H1 or Modbus RTU/RS 485.

3/12/18

© Siemens AG 2015

Technical specifications

Product characteristic	MAG 5100 W (7ME6520) Mainly for the European market EPDM or NBR lining	MAG 5100 W (7ME6580) Mainly for the non-European market Ebonite lining
Design and nominal size	Coned sensor (octagon liner) DN 15 ... 40 (½" ... 1½") Coned sensor: DN 50 ... 300 (2" ... 12") Full bore sensor: DN 350 ... 1200 (14" ... 48")	Full bore sensor: DN 25 ... 2000 (1" ... 78")
Measuring principle	Electromagnetic induction	Electromagnetic induction
Excitation frequency (Mains supply: 50/60 Hz)	DN 15 ... 65 (½" ... 2½"): 12.5 Hz/15 Hz DN 80 ... 150 (3" ... 6"): 6.25 Hz/7.5 Hz DN 200 ... 300 (8" ... 12"): 3.125 Hz/3.75 Hz DN 350 ... 1200 (14" ... 48"): 1.5625 Hz/1.875 Hz	DN 25 ... 65 (1" ... 2½"): 12.5 Hz/15 Hz DN 80 ... 150 (3" ... 6"): 6.25 Hz/7.5 Hz DN 200 ... 1200 (8" ... 48"): 3.125 Hz/3.75 Hz DN 1400 ... 2000 (54" ... 78"): 1.5625 Hz/1.875 Hz
Process connection		
Flanges[1]		
• EN 1092-1	PN 10 (145 psi) : DN 200 ... 300 (8" ... 12") Flat face PN 10 (145 psi): DN 350 ... 1200 (14" ... 48") Raised face[2] PN 16 (232 psi): DN 50 ... 300 (2" ... 12") Flat face[3] PN 16 (232 psi): DN 350 ... 1200 (14" ... 48") Raised face PN 40 (580 psi): DN 15 ... 40 (½" ... 1½") Flat face	Raised face[3] (EN 1092-1, DIN 2501 and BS 4504 have the same mating dimensions) PN 6 (87 psi): DN 1400 ... 2000 (54" ... 78") PN 10 (145 psi): DN 200 ... 2000 (8" ... 78") PN 16 (232 psi): DN 65 ... 600 (2½" ... 24") PN 40 (580 psi): DN 25 ... 50 (1" ... 2")
• ANSI B16.5	Class 150: ½" ... 12" flat face; 14" ... 24" raised face	Class 150: 1" ... 24"; raised face
• AWWA C-207	Class D: 28" ... 48", flat face	Class D: 28" ... 78", flat face
• AS4087	PN 16 (DN 50 ... 1200), (2" ... 48") 16 bar (232 psi)	PN 16 (DN 50 ... 1200), (2" ... 48") 16 bar (232 psi)
• JIS B 2220:2004	-	K10 (1" ... 24")
Rated Operation conditions		
Ambient temperature		
• Sensor	-40 ... +70 °C (-40 ... +158 °F)	-20 ... +70 °C (-4 ... +158 °F)
• With compact transmitter MAG 5000/6000[4]	-20 ... +60 °C (-4 ... +140 °F)	-20 ... +60 °C (-4 ... +140 °F)
Operating pressure (Abs) [abs. bar] (Maximum operating pressure depending on flange standard, decreases with increasing operating temperature)	DN 15 ... 40 (½" ... 1½"): 0.01 ... 40 bar (0.15 ... 580 psi) DN 50 ... 300 (2" ... 12"): 0.03 ... 20 bar (0.44 ... 290 psi) DN 350 ... 1200 (14" ... 48"): 0.01 ... 16 bar (0.15 ... 232 psi)	DN 25 ... 50 (1" ... 2"): 0.01 ... 40 bar (0.15 ... 580 psi) DN 65 ... 1200 (2½" ... 48"): 0.01 ... 16 bar (0.15 ... 232 psi) DN 1400 ... 2000 (54" ... 78"): 0.01 ... 10 bar (0.15 ... 145 psi)
Enclosure rating		
• Standard	IP67 to EN 60529/NEMA 4X/6 (1 mH_2O for 30 min)	IP67 to EN 60529/NEMA 4X/6 (1 mH_2O for 30 min)
• Option	IP68 to EN 60529/NEMA 6P (10 mH_2O continuously)	IP68 to EN 60529/NEMA 6P (10 mH_2O continuously)
Pressure drop	DN 15 and 25 (½" and 1"): Max. 20 mbar (0.29 psi) at 1 m/s (3 ft/s). DN 40 ... 300 (1½" ... 12"): Max 25 mbar (0.36 psi) at 3 m/s (10 ft/s) DN 350 ... 1200 (14" ... 48"): Insignificant	Insignificant
Test pressure	1.5 x PN (where applicable) FM Fire Service: 2 x PN	1.5 x PN (where applicable)
Mechanical load (vibration)	18 ... 1000 Hz random in x, y, z, directions for 2 hours according to EN 60068-2-36 Sensor: 3.17 g RMS Sensor with compact MAG 5000/6000 mounted transmitter: 3.17 g RMS Sensor with compact MAG 6000 I mounted transmitter: 1.14 g RMS	18 ... 1000 Hz random in x, y, z, directions for 2 hours according to EN 60068-2-36 Sensor: 3.17 g RMS Sensor with compact MAG 5000/6000 mounted transmitter: 3.17 g RMS Sensor with compact MAG 6000 I mounted transmitter: 1.14 g RMS

3/12/18

© Siemens AG 2015

Product characteristic	Mainly for the European market (7ME6520) EPDM or NBR lining	Mainly for the non-European market (7ME6580) Ebonite lining
Medium conditions		
Temperature of medium		
• NBR	-10 ... +70 °C (14 .. 158 °F)	-
• EPDM	-10 ... +70 °C (14 ... 158 °F)	-
• EPDM/NBR (MI-001)	0.1 ... 30 °C (32 ... 76 °F)	-
• Ebonite	-	-10 ... +70 °C (14 ... 158 °F)
EMC	2004/108/EC	2004/108/EC
Design		
Material		
• Housing and flanges	Carbon steel ASTM A 105, with corrosion-resistant two-component epoxy coating (150 µm/300 µm) Corrosivity category C4, according to ISO 12944-2	Carbon steel ASTM A 105, with corrosion-resistant two-component epoxy coating (150 µm/300 µm) Corrosivity category C4, according to ISO 12944-2
• Measuring pipe	Stainless steel AISI 304/1.4301	Stainless steel AISI 304/1.4301
• Electrode	Hastelloy C	Hastelloy C
• Grounding electrode	Hastelloy C	Hastelloy C
• Terminal box	Fibre glass reinforced polyamide	Fibre glass reinforced polyamide
Certificates and approvals		
Calibration		
• Standard production calibration (default), calibration report shipped with sensor	Zero-point, 2 x 25 % and 2 x 90 %	Zero-point, 2 x 25 % and 2 x 90 %
• Special calibration	5-point calibration: 20 %, 40 %, 60 %, 80 %, 100 % of factory Q_{max} 10-point calibration: ascending and descending at 20 %, 40 %, 60 %, 80 %, 100 % of factory Q_{max} Matched-pair calibration: default, 5-point or 10-point	5-point calibration: 20 %, 40 %, 60 %, 80 %, 100 % of factory Q_{max} 10-point calibration: ascending and descending at 20 %, 40 %, 60 %, 80 %, 100 % of factory Q_{max} Matched-pair calibration: default, 5-point or 10-point
Material certificate EN 10204 3.1	Available when ordering together with meter[5]	Available when ordering together with meter[5]
Pressure test certificate	Available when ordering together with meter[5]	Available when ordering together with meter[5]
Custody Transfer (only together with MAG 6000 CT)	OIML R 49 pattern approval cold water (Denmark and Germany): DN 50 ... 300 (2" ... 12") MI-001 cold water (EU): DN 50 ... 300 (2" ... 12") PTB K7.2: Chilled water energy metering DN 50-300 (order as special) Certificate number: 22 76.10 02	
Drinking water approvals	EPDM liner: NSF/ANSI Standard 61[6] (Cold water, US) WRAS (WRc, BS6920 cold water, GB) ACS (F), DVGW W270 (D) Belgaqua (B)	NSF/ANSI Standard 61[6] (Cold water, US) WRAS (WRc, BS6920 cold water, GB)
Other approvals	MCERTS PED conforming: All EN1092-1 flanges and ANSI Class 150 (< DN 300 (<12")) – 97/23/EC[7] CRN (DN 50 - DN 1200 (2" ... 48")) CSA Class I, Div 2[8] FM Class I, Div 2[8] FM Fire Service Approval according to class 1044[8][9] VdS: Extinguishing systems DN 50 ... 300	PED conforming: All EN1092-1 flanges (≤ DN 600 (≤ 24") – 97/23/EC[7] CRN CSA Class I, Div 2[8] FM Class I, Div 2[8]

1) DN 750, DN 1050 and DN 1100 (30", 42" and 44") not available with EN 1092-1 (PN 10 and PN 16) and AS4067 flanges
2) Type 01 (SORF)
3) DN ≤ 600 type 01 (SORF); DN > 600 type 11
4) With compact transmitter MAG 5000 CT/6000 CT -20 ... +50 °C (-4 ... +122 °F); with compact MI-001 approved transmitter -25 ... +55 °C (-13 ... +131 °F)
5) Has to be ordered with the meter. It is not possible to order the certificate afterwards.
6) Including Annex G
7) For sizes larger than 600 mm (24") in PN 16 PED conformity is available as a cost-added option. The basic unit will carry the LVD (Low Voltage Directive) and EMC approval. All products sold outside of EU and EFTA are excluded from the directive, also products sold into certain market sectors are excluded. These include:
a) Meters used in networks for the supply, distribution and discharge of water.
b) Meters used in pipelines for the conveyance of any fluid from offshore to onshore.
c) Meters used in the extraction of petroleum or gas, including Christmas tree and manifold equipment.
d) Any meter mounted on a ship or mobile offshore platform. For further information on the PED standard and requirements see page 9/6
8) Not for sensors with 300 µm coating
9) DN 50, DN 80, DN 100, DN 150, DN 200, DN 250, and DN 300 (2", 3", 4", 6", 8", 10", and 12") with ANSI B16.5 Class 150 flanges

3/12/18

© Siemens AG 2015

MAG 5100 W (7ME6520) with MAG 6000 CT (Revenue program) MI-001

MAG 5100 W CT program is type approved according to international water meter standard OIML R 49. Since the first November 2006 the MI-001 water meter directive is in force, which means that all water meters can be sold across the EU borders if the water meters contain a MI-001 label.

The MAG 5100 W MI-001 verified and labeled products are a Class II approval according to Directive 2004/22/EC of the European Parliament and Council of March 31, 2004 on measuring instruments (MID), Annex MI-001 in the sizes from DN 50 to DN 300 (Article No. 7ME6520).

The MID certification is obtained as a modul B + D module approval according to the above mentioned directive.

Module B : Type approval according to OIML R 49

Module D : Quality insurance approval of production

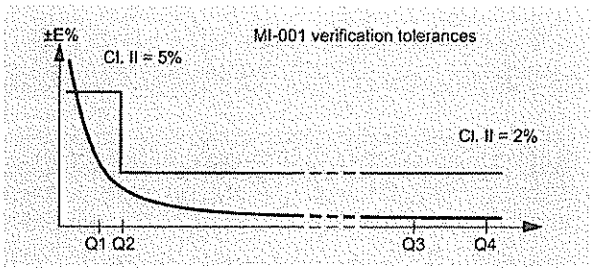

MAG 5100 W (7ME6520) with MAG 5000/MAG 6000 or MAG 6000 CT for Fire Service applications

MAG 5100 W (7ME6520) is FM Fire Service approved for automatic fire protection systems. The approval is applicable for the sizes DN 50, DN 80, DN 100, DN 150, DN 200, DN 250 and DN 300 (2", 3", 4", 6", 8", 10" and 12") with ANSI B16.5 Class 150 flanges. The FM Fire Service approved product can be ordered via the Z-options P20, P21 and P22.

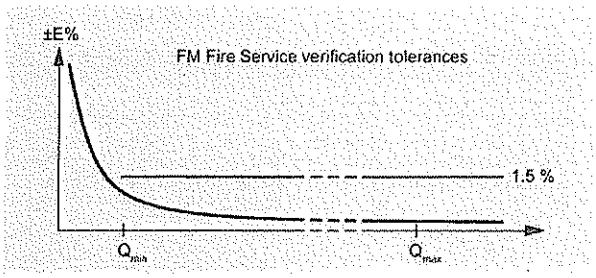

© Siemens AG 2015

Flow sensor MAG 5100 W

MAG 5100 W (7ME6520) MI-001 verified and labeled products at a given Q3 and Q3/Q4 = 1.25 and Q2/Q1 = 1.6 measuring ranges see table below:

Order code: P11	DN 50 (2")	DN 65 (2½")	DN 80 (3")	DN 100 (4")	DN 125 (5")	DN 150 (6")	DN 200 (8")	DN 250 (10")	DN 300 (12")
„R" Q3/Q1	25	25	25	25	25	25	25	25	25
Q4 [m^3/h]	20	31.25	50	78.75	125	200	312.5	500	787.5
Q3 [m^3/h]	**16**	**25**	**40**	**63**	**100**	**160**	**250**	**400**	**630**
Q2 [m^3/h]	1.02	1.6	2.6	4.03	6.4	10.24	16	25.6	40.32
Q1 [m^3/h]	0.64	1.00	1.60	2.52	4.0	6.4	10.0	16.0	25.2

Order code: P12	DN 50 (2")	DN 65 (2½")	DN 80 (3")	DN 100 (4")	DN 125 (5")	DN 150 (6")	DN 200 (8")	DN 250 (10")	DN 300 (12")
„R" Q3/Q1	63	63	63	63	63	63	63	63	63
Q4 [m^3/h]	20	31.25	50	78.75	125	200	312.5	500	787.5
Q3 [m^3/h]	**16**	**25**	**40**	**63**	**100**	**160**	**250**	**400**	**630**
Q2 [m^3/h]	0.41	0.63	1.02	1.6	2.54	4.06	6.35	10.2	16.0
Q1 [m^3/h]	0.25	0.40	0.63	1.00	1.59	2.54	3.97	6.35	10.0

Order code: P13	DN 50 (2")	DN 65 (2½")	DN 80 (3")	DN 100 (4")	DN 125 (5")	DN 150 (6")	DN 200 (8")	DN 250 (10")	DN 300 (12")
„R" Q3/Q1	80	80	80	80	80	80	80	80	80
Q4 [m^3/h]	20	31.25	50	78.75	125	200	312.5	500	787.5
Q3 [m^3/h]	**16**	**25**	**40**	**63**	**100**	**160**	**250**	**400**	**630**
Q2 [m^3/h]	0.32	0.50	0.80	1.20	2.00	3.20	5.0	8.0	12.6
Q1 [m^3/h]	0.20	0.31	0.50	0.75	1.25	2.00	3.13	5.0	7.90

Order code: P16	DN 50 (2")	DN 65 (2½")	DN 80 (3")	DN 100 (4")	DN 125 (5")	DN 150 (6")	DN 200 (8")	DN 250 (10")	DN 300 (12")
„R" Q3/Q1	160	160	160	160	160	160	160	160	160
Q4 [m^3/h]	50	78.75	125	200	312.5	500	787.5	1250	2000
Q3 [m^3/h]	**40**	**63**	**100**	**160**	**250**	**400**	**630**	**1000**	**1600**
Q2 [m^3/h]	0.40	0.63	1.00	1.60	2.50	4.00	6.3	10.0	16.0
Q1 [m^3/h]	0.25	0.39	0.63	1.00	1.56	2.50	3.94	6.3	10.0

Order code: P17	DN 50 (2")	DN 65 (2½")	DN 80 (3")	DN 100 (4")	DN 125 (5")	DN 150 (6")	DN 200 (8")	DN 250 (10")	DN 300 (12")
„R" Q3/Q1	200	200	200	200	200	200	200	200	200
Q4 [m^3/h]	50	78.75	125	200	312.5	500	787.5	1250	2000
Q3 [m^3/h]	**40**	**63**	**100**	**160**	**250**	**400**	**630**	**1000**	**1600**
Q2 [m^3/h]	0.32	0.50	0.80	1.28	2.00	3.20	5.0	8.0	12.8
Q1 [m^3/h]	0.20	0.32	0.50	0.80	1.25	2.00	3.15	5.0	8.0

Order code: P18	DN 50 (2")	DN 65 (2½")	DN 80 (3")	DN 100 (4")	DN 125 (5")	DN 150 (6")	DN 200 (8")	DN 250 (10")	DN 300 (12")
„R" Q3/Q1	250	250	250	250	250	250	250	250	250
Q4 [m^3/h]	50	78.75	125	200	312.5	500	787.5	1250	2000
Q3 [m^3/h]	**40**	**63**	**100**	**160**	**250**	**400**	**630**	**1000**	**1600**
Q2 [m^3/h]	0.26	0.40	0.64	1.02	1.60	2.56	4.0	6.4	10.24
Q1 [m^3/h]	0.16	0.25	0.40	0.64	1.00	1.60	2.52	4.0	6.4

The Label is placed on the side of the encapsulation. An example of the product label is shown below:

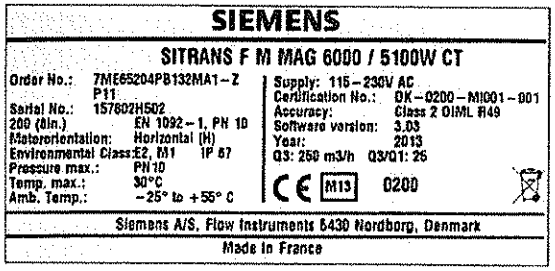

OIML R 49/MI-001 approvals valid for:

- DN 50 to 300 mm (2" to 12")
- Horizontal installation
- Compact or remote with max. 3 m cable
- Power supply 115/230 V AC

Other restrictions may apply (see certificate).

Special OIML / MI-001 settings:

- Unit: m^3
- Qmax: Q3
- Digital output: Frequency

For other factory settings, see Operating Instructions.

3/12/18

© Siemens AG 2015

Selection and Ordering data		Article No.
Sensor SITRANS F M MAG 5100 W	↗	**7ME6520-**
Hastelloy electrodes, carbon steel flanges, EU water markets and low flow applications		**- 2**
↗ Click on the Article No. for the online configuration in the PIA Life Cycle Portal.		
Diameter		
DN 15 (½")	☆	**1V**
DN 25 (1")	☆	**2D**
DN 40 (1½")	☆	**2R**
DN 50 (2")	☆	**2Y**
DN 65 (2½")	☆	**3F**
DN 80 (3")	☆	**3M**
DN 100 (4")	☆	**3T**
DN 125 (5")	☆	**4B**
DN 150 (6")	☆	**4H**
DN 200 (8")	☆	**4P**
DN 250 (10")	☆	**4V**
DN 300 (12")	☆	**5D**
DN 350 (14")		**5K**
DN 400 (16")		**5R**
DN 450 (18")		**5Y**
DN 500 (20")		**6F**
DN 600 (24")		**6P**
DN 700 (28")		**6Y**
DN 750 (30")		**7D**
DN 800 (32")		**7H**
DN 900 (36")		**7M**
DN 1000 (40")		**7R**
(42")		**7U**
(44")		**7V**
DN 1200 (48")		**8B**
Flange norm and pressure rating		
to EN 1092-1		
PN 10 (DN 200 ... 1200/8" ... 48")	☆	**B**
PN 16 (DN 50 ... 1200/2" ... 48")	☆	**C**
PN 16, non PED (DN 700 ... 1200/28" ... 48")		**D**
PN 40 (DN 15 ... 40/½" ... 1½")	☆	**F**
to ANSI B16.5		
class 150 (½" ... 24")	☆	**J**
to AWWA C-207		
Class D (28" ... 48")		**L**
to AS 4087		
PN 16 (DN 50 ... 1200/2" ... 48")		**N**
Flange material and coating		
Carbon steel flanges ASTM A 105, 150 µm coating	☆	**1**
Carbon steel flanges ASTM A 105, 300 µm coating		**4**
Liner material		
EPDM	☆	**2**
NBR Hard Rubber	☆	**3**
Transmitter		
Sensor for remote transmitter (Order transmitter separately)	☆	**A**
MAG 6000 I, Aluminum, 18 ... 90 V DC, 115 ... 230 V AC	☆	**C**
MAG 6000, Polyamid, 11 ... 30 V DC/11 ... 24 V AC	☆	**H**
MAG 6000, Polyamid, 115 ... 230 V AC	☆	**J**
MAG 5000, Polyamid, 11 ... 30 V DC/11 ... 24 V AC	☆	**K**
MAG 5000, Polyamid, 115 ... 230 V AC	☆	**L**
MAG 6000 CT, Polyamid, 115 ... 230 V AC		**M**

Selection and Ordering data		Article No.
Sensor SITRANS F M MAG 5100 W		**7ME6520-**
Hastelloy electrodes, carbon steel flanges, EU water markets and low flow applications		**- 2**
Communication		
None	☆	**A**
HART	☆	**B**
PROFIBUS PA Profile 3 (only MAG 6000/MAG 6000 I)	☆	**F**
PROFIBUS DP Profile 3 (only MAG 6000/MAG 6000 I)	☆	**G**
Modbus RTU/RS 485 (only MAG 6000/MAG 6000 I)	☆	**E**
FOUNDATION Fieldbus H1 (only MAG 6000/ MAG 6000 I)	☆	**J**
Cable glands/terminal box		
Metric/Polyamid terminal box or 6000 I compact	☆	**1**
½" NPT/Polyamid terminal box or 6000 I compact	☆	**2**

☆ We can offer shorter delivery times for configurations designated with the Quick Ship Symbol ☆. For details see page 9/5 in the appendix.

3/12/18

© Siemens AG 2015

Flow sensor MAG 5100 W

Selection and Ordering data	Order code
Additional information	
Please add "**-Z**" to Article No. and specify Order code(s) and plain text.	
Pressure test certificate according to EN 10204-3.1	**C01**
Material certificate according to EN 10204-3.1	**C12**
Factory certificate according to EN 10204-2.2	**C14**
Factory certificate according to EN 10204-2.1	**C15**
FP2E marking (only France)	**C17**
Special calibration	
• 5-point calibration for DN 15 .. DN 200[1)]	**D01**
• 5-point calibration for DN 250 ... DN 600[1)]	**D02**
• 5-point calibration for DN 700 ... DN 1200[1)]	**D03**
• 10-point calibration for DN 15 ... DN 200[2)]	**D06**
• 10-point calibration for DN 250 ... DN 600[2)]	**D07**
• 10-point calibration for DN 700 ... DN 1200[2)]	**D08**
• Default (2 x 25 % and 2 x 90 %) match-pair calibration for DN 15 ... DN 200	**D11**
• Default (2 x 25 % and 2 x 90 %) match-pair calibration for DN 250 ... DN 600	**D12**
• Default (2 x 25 % and 2 x 90 %) match-pair calibration for DN 700 ... DN 1200	**D13**
• 5-point, matched-pair calibration for DN 15 ... DN 200[1)]	**D15**
• 5-point, matched-pair calibration for DN 250 ... DN 600[1)]	**D16**
• 5-point, matched-pair calibration for DN 700 ... DN 1200[1)]	**D17**
• 10-point, matched-pair calibration for DN 15 ... DN 200[2)]	**D18**
• 10-point, matched-pair calibration for DN 250 ... DN 600[2)]	**D19**
• 10-point, matched-pair calibration for DN 700 ... DN 1200[2)]	**D20**
With pre-mounted terminal blocks for remote systems	**N02**
Approval/Verification[3)] (MI-001 : DN 50 ... 300 (compact only), EN 1092-1 PN10 and PN16 flanges with MAG 6000 CT)[4)]	
• Without verification according to OIML R 49	**P10**
• MI-001 Q3/Q1 = 25	**P11**
• MI-001 Q3/Q1 = 63	**P12**
• MI-001 Q3/Q1 = 80	**P13**
• MI-001 Q3/Q1 = 160	**P16**
• MI-001 Q3/Q1 = 200	**P17**
• MI-001 Q3/Q1 = 250	**P18**
FM Fire Service Approval (with ANSI B16.5 Class 150 flanges)	
• DN 50, DN 80 and DN 100 (2", 3" and 4")	**P20**
• DN 150 and DN 200 (6" and 8")	**P21**
• DN 250 and DN 300 (10" and 12")	**P22**
Tag name plate, stainless steel fixed with SS wire (add plain text)	**Y17**
Tag name plate, plastic (self-adhesive)	**Y18**
Customer-specific converter setup	**Y20**
Sensor cables wired (specify cable Article No.)	**Y40**
Sensor for remote transmitter's junction box potted to IP68 with wired cable (specify cable Article No.)	**Y41**
Other postproduction requirements (add desired text)	**Y99**

Selection and Ordering data	Order code
Additional Calibrations	
Accredited Siemens Flow Instruments matched pair Calibration acc. to ISO/IEC 17025:2005	**On request[5)]**
Customer-witnessed calibration Any of above calibration	**On request[5)]**

[1)] 20 %, 40 %, 60 %, 80 %, 100 % of factory Q_{max}

[2)] Ascending and descending at 20 %, 40 %, 60 %, 80 %, 100 % of factory Q_{max}

[3)] For more details and references of the ranges please see the tables on page 3/96.

[4)] For remote version submit Product Variation Request.

[5)] Ordering On request as dedicated information from the customer on the individual sensors is required.

Operating instructions for SITRANS F M MAG 5100 W

Description	Article No.
• English	**A5E03063678**
• German	**A5E03376527**
• Spanish	**A5E00376529**
• French	**A5E03376521**
• Chinese	**A5E03376501**

This device is shipped with a Quick Start guide and a CD containing further SITRANS F literature.

All literature is also available for free at:
http://www.siemens.com/flowdocumentation

Accessories

Description	Article No.
Potting kit for terminal box of flow sensors for IP68/NEMA 6P	⊛ **FDK:085U0220**

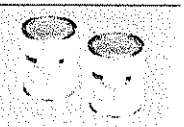

⊛ We can offer shorter delivery times for configurations designated with the Quick Ship Symbol ⊛. For details see page 9/5 in the appendix.

MAG 5000/6000 transmitters and sensors are packed in separate boxes, the final assembly takes place during installation at the customer's place. MAG 6000 I transmitters and sensors are delivered compact mounted from factory.
Communication module will be pre-mounted in the transmitter.

Please use online Product selector to get latest updates.

Product selector link:
www.pia-portal.automation.siemens.com

© Siemens AG 2015

Selection and Ordering data	Article No.
Sensor SITRANS F M MAG 5100 W	↗ **7ME6580 -**
Hastelloy electrodes, carbon steel flanges, Non EU water markets	
↗ Click on the Article No. for the online configuration in the PIA Life Cycle Portal.	
Diameter	
DN 25 (1")	○ **2D**
DN 40 (1½")	○ **2R**
DN 50 (2")	○ **2Y**
DN 65 (2½")	○ **3F**
DN 80 (3")	○ **3M**
DN 100 (4")	○ **3T**
DN 125 (5")	○ **4B**
DN 150 (6")	○ **4H**
DN 200 (8")	○ **4P**
DN 250 (10")	○ **4V**
DN 300 (12")	○ **5D**
DN 350 (14")	**5K**
DN 400 (16")	**5R**
DN 450 (18")	**5Y**
DN 500 (20")	**6F**
DN 600 (24")	**6P**
DN 700 (28")	**6Y**
DN 750 (30")	**7D**
DN 800 (32")	**7H**
DN 900 (36")	**7M**
DN 1000 (40")	**7R**
(42")	**7U**
(44")	**7V**
DN 1200 (48")	**8B**
DN 1400 (54")	**8F**
DN 1500 (60")	**8K**
DN 1600 (66")	**8P**
DN 1800 (72")	**8T**
DN 2000 (78")	**8Y**
Flange norm and pressure rating	
to EN 1092-1	
PN 6 (DN 1400 ... 2000 (54" ... 78"))[1]	**A**
PN 10 (DN 200 ... 2000 (8" ... 78"))[1]	○ **B**
PN 16 (DN 65 ... 600 (2½" ... 24"))	○ **C**
PN 16, non-PED (DN 700 ... 2000 (28" ... 78"))	**D**
PN 40 (DN 25 ... 50 (1" ... 2"))	○ **F**
to ANSI B16.5	
class 150 (1" ... 24")	○ **J**
to AWWA C-207	
Class D (28" ... 78")[1]	**L**
to AS 4087	
PN 16 (DN 50 ... 1200 (2" ... 48"))	**N**
to JIS	
B 2220:2004 K10 (1" ... 24")	**R**
Flange material and coating	
Carbon steel flanges ASTM A 105, 150 µm coating	**1**
Carbon steel flanges ASTM A 105, 300 µm coating	**4**
Liner material	
Ebonite Hard Rubber	**4**
Electrode material	
Hastelloy	**2**

Selection and Ordering data	Article No.
Sensor SITRANS F M MAG 5100 W	**7ME6580 -**
Hastelloy electrodes, carbon steel flanges, Non EU water markets	
Transmitter with display	
Sensor for remote transmitter (Order transmitter separately)	○ **A**
MAG 6000, Polyamid, 11 ... 30 V DC/11 ... 24V AC	○ **H**
MAG 6000, Polyamid, 115 ... 230 V AC	○ **J**
MAG 5000, Polyamid, 11 ... 30 V DC/11 ... 24V AC	○ **K**
MAG 5000, Polyamid, 115 ... 230 V AC	○ **L**
Communication	
No communication, add-on possible	○ **A**
HART	○ **B**
PROFIBUS PA Profile 3 (only MAG 6000)	○ **F**
PROFIBUS DP Profile 3 (only MAG 6000)	○ **G**
Modbus RTU/RS 485 (only MAG 6000)	○ **E**
FOUNDATION Fieldbus H1 (only MAG 6000)	○ **J**
Cable glands/terminal box	
Metric	○ **1**
½" NPT	○ **2**

[1] DN 1400 to DN 2000 (54" to 78") do not conform to PED or CRN.

○ We can offer shorter delivery times for configurations designated with the Quick Ship Symbol ○. For details see page 9/5 in the appendix.

3/12/18

© Siemens AG 2015

Flow sensor MAG 5100 W

Selection and Ordering data	Order code
Additional information	
Please add **"-Z"** to Article No and specify Order code(s) and plain text.	
Pressure test certificate according to EN 10204-3.1	**C01**
Material certificate according to EN 10204-3.1	**C12**[1]
Factory certificate according to EN 10204-2.2	**C14**
Factory certificate according to EN 10204-2 1	**C15**
Special calibration	
• 5-point calibration for DN 15 DN 200[2]	**D01**
• 5-point calibration for DN 250 ... DN 600[2]	**D02**
• 5-point calibration for DN 700 ... DN 1200[2]	**D03**
• 10-point calibration for DN 15 ... DN 200[3]	**D06**
• 10-point calibration for DN 250 ... DN 600[3]	**D07**
• 10-point calibration for DN 700 ... DN 1200[3]	**D08**
• Default (2 x 25 % and 2 x 90 %) match-pair calibration for DN 15 ... DN 200	**D11**
• Default (2 x 25 % and 2 x 90 %) match-pair calibration for DN 250 ... DN 600	**D12**
• Default (2 x 25 % and 2 x 90 %) match-pair calibration for DN 700 ... DN 1200	**D13**
• 5-point, matched-pair calibration for DN 15 ... DN 200[2]	**D15**
• 5-point, matched-pair calibration for DN 250 ... DN 600[2]	**D16**
• 5-point, matched-pair calibration for DN 700 ... DN 1200[2]	**D17**
• 10-point, matched-pair calibration for DN 15 ... DN 200[3]	**D18**
• 10-point, matched-pair calibration for DN 250 ... DN 600[3]	**D19**
• 10-point, matched-pair calibration for DN 700 ... DN 1200[3]	**D20**
With pre-mounted terminal blocks for remote systems	**N02**
Tag name plate, stainless steel fixed with SS wire	**Y17**
Tag name plate, plastic (self-adhesive)	**Y18**
Customer-specific converter setup	**Y20**
Sensor cables wired (specify cable Article No.)	**Y40**
Sensor for remote transmitter's junction box potted to IP68 with wired cable (specify cable Article No.)	**Y41**
Other postproduction requirements (add desired text)	**Y99**

[1] Under preparation

[2] 20 %, 40 %, 60 %, 80 %, 100 % of factory Q_{max}

[3] Ascending and descending at 20 %, 40 %, 60 %, 80 %, 100 % of factory Q_{max}

We can offer shorter delivery times for configurations designated with the Quick Ship Symbol ☆. For details see page 9/5 in the appendix.

Operating instructions for SITRANS F M MAG 5100 W

Description	Article No.
• German	**A5E03376527**
• English	**A5E03063678**
• French	**A5E03376521**
• Spanish	**A5E03376529**
• Chinese	**A5E03376501**

This device is shipped with a Quick Start guide and a CD containing further SITRANS F literature.

All literature is also available for free at:
http://www.siemens.com/flowdocumentation

Accessories

Description	Article No.
Potting kit for terminal box of flow sensors for IP68/NEMA 6P	☆ **FDK:085U0220**

☆ We can offer shorter delivery times for configurations designated with the Quick Ship Symbol ☆. For details see page 9/5 in the appendix.

MAG 5000/6000 transmitters and sensors are packed in separate boxes, the final assembly takes place during installation at the customer's place.
Communication module will be pre-mounted in the transmitter.
Please use online Product selector to get latest updates.
Product selector link: www.pia-portal.automation.siemens.com

3/12/18

© Siemens AG 2015

Dimensional drawings

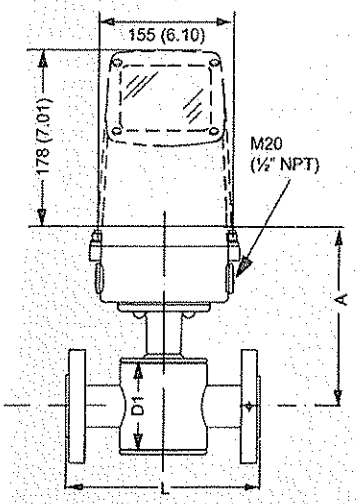

7ME6520: DN 15 ... 40 (½" ... 1½")

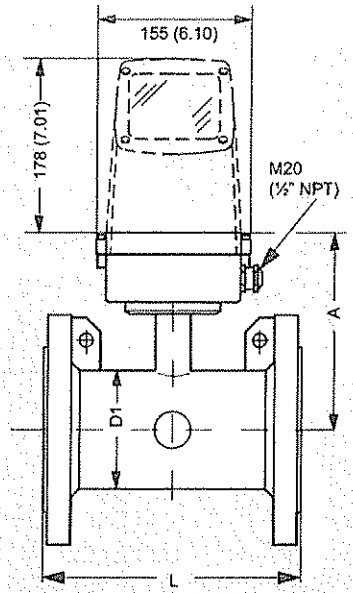

7ME6520: DN 50 ... 300 (2" ... 12")

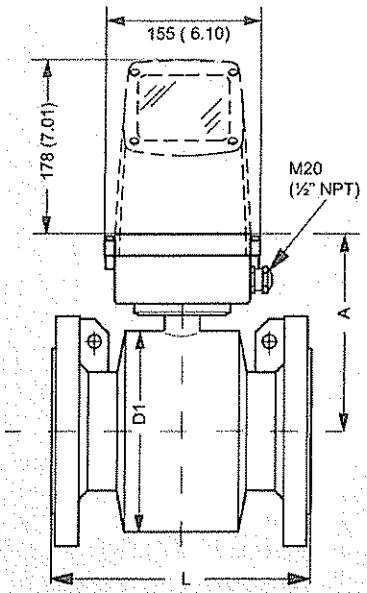

7ME6520: DN 350 ... 1200 (14" ... 48")
7ME6580: DN 25 ... 2000 (1" ... 78")

7ME6520 NBR or EPDM liner						7ME6580 Ebonite liner					
Nominal size		A		D1		A		D1		L	
[mm]	[inch]	[mm]	[inch]	[mm]	[inch]	[mm]	[inch]	[mm]	[inch]	[mm]	[inch]
15	½	177	7.0	77	3.0	-	-	-	-	200	7.9
25	1	187	7.4	96	3.8	187	7.4	104	4.09	200	7.9
40	1½	202	8.0	127	5.0	197	7.8	124	4.88	200	7.9
50	2	188	7.4	76	3.0	205	8.1	139	5.47	200	7.9
65	2½	194	7.6	89	3.5	212	8.3	154	6.06	200	7.9
80	3	200	7.9	102	4.0	222	8.7	174	6.85	200	7.9
100	4	207	8.1	114	4.5	242	9.5	214	8.43	250	9.8
125	5	217	8.5	140	5.5	255	10.0	239	9.41	250	9.8
150	6	232	9.1	168	6.6	276	10.9	282	11.1	300	11.8
200	8	257	10.1	219	8.6	304	12.0	338	13.31	350	13.8
250	10	284	11.2	273	10.8	332	13.1	393	15.47	450	17.7
300	12	310	12.2	324	12.8	357	14.1	444	17.48	500	19.7
350	14	382	15.0	451	17.8	362	14.3	451	17.76	550	21.7
400	16	407	16.0	502	19.8	387	15.2	502	19.76	600	23.6
450	18	438	17.2	563	22.2	418	16.5	563	22.16	600	23.6
500	20	463	18.2	614	24.2	443	17.4	614	24.17	600	23.6
600	24	514	20.2	715	28.2	494	19.4	715	28.15	600	23.6
700	28	564	22.2	816	32.1	544	21.4	816	32.13	700	27.6
750	30	591	23.3	869	34.2	571	22.5	869	34.21	750	29.5
800	32	616	24.3	927	36.5	606	23.9	927	36.5	800	31.5
900	36	663	26.1	1032	40.6	653	25.7	1032	40.63	900	35.4
1000	40	714	28.1	1136	44.7	704	27.7	1136	44.72	1000	39.4
	42	714	28.1	1136	44.7	704	27.7	1136	44.72	1000	39.4
	44	765	30.1	1238	48.7	755	29.7	1238	48.74	1100	43.3
1200	48	820	32.3	1348	53.1	810	31.9	1348	53.07	1200	47.2
1400	54	-	-	-	-	925	36.4	1574	65.94	1400	55.1
1500	60	-	-	-	-	972	38.2	1672	65.83	1500	59.1
1600	66	-	-	-	-	1025	40.4	1774	75.39	1600	63
1800	72	-	-	-	-	1123	44.2	1974	77.72	1800	70.9
2000	78	-	-	-	-	1223	48.1	2174	85.59	2000	78.7

- not available

3/12/18

© Siemens AG 2015

Flow sensor MAG 5100 W

MAG 5100 W/6000 I Compact

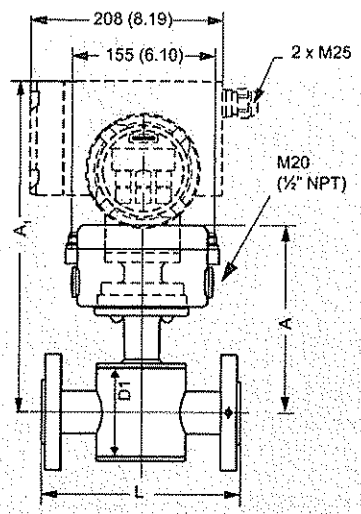

7ME6520: DN 15 ... 40 (½" ... 1½")

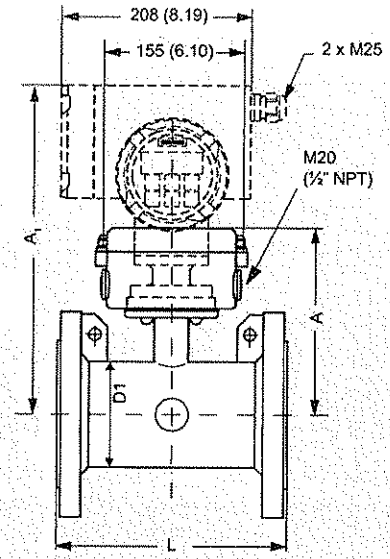

7ME6520: DN 50 ... 300 (2" ... 12")

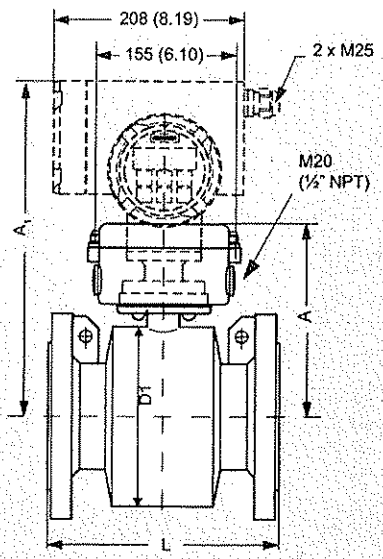

7ME6520: DN 350 ... 2000 (14" ... 78")
7ME6580: DN 25 ... 2000 (1" ... 78")

		7ME6520 NBR or EPDM liner						7ME6580 Ebonite liner							
Nominal size		A		A1		D1		A		A1		D1		L	
[mm]	[inch]	[mm]	[inch]	[mm]	[inch]	[mm]	[inch]	[mm]	[inch]	[mm]	[inch]	[mm]	[inch]	[mm]	[inch]
15	½	177	7.0	331	13.0	77	3.0	187	7.4	-	-	-	-	200	7.9
25	1	187	7.4	341	13.4	96	3.8	187	7.4	341	13.4	104	4.09	200	7.9
40	1½	202	8.0	356	14.0	127	5.0	197	7.8	351	13.8	124	4.88	200	7.9
50	2	188	7.4	342	13.5	76	3.0	205	8.1	359	14.1	139	5.47	200	7.9
65	2½	194	7.6	348	13.7	89	3.5	212	8.3	366	14.4	154	6.06	200	7.9
80	3	200	7.9	354	14.0	102	4.0	222	8.7	376	14.8	174	6.85	200	7.9
100	4	207	8.1	361	14.2	114	4.5	242	9.5	396	15.6	214	8.43	250	9.8
125	5	217	8.5	371	14.6	140	5.5	255	10.0	409	16.1	239	9.41	250	9.8
150	6	232	9.1	386	15.2	168	6.6	276	10.9	430	16.9	282	11.1	300	11.8
200	8	257	10.1	411	16.2	219	8.6	304	12.0	458	18.0	338	13.31	350	13.8
250	10	284	11.2	438	17.2	273	10.8	332	13.1	486	19.1	393	15.47	450	17.7
300	12	310	12.2	464	18.3	324	12.8	357	14.1	511	20.1	444	17.48	500	19.7
350	14	382	15.0	536	21.1	451	17.8	362	14.3	516	20.3	451	17.76	550	21.7
400	16	407	16.0	561	22.1	502	19.8	387	15.2	541	21.3	502	19.76	600	23.6
450	18	438	17.2	592	23.3	563	22.2	418	16.5	572	22.5	563	22.16	600	23.6
500	20	463	18.2	617	24.3	614	24.2	443	17.4	597	23.5	614	24.17	600	23.6
600	24	514	20.2	668	26.3	715	28.2	494	19.4	648	25.5	715	28.15	600	23.6
700	28	564	22.2	718	28.3	816	32.1	544	21.4	698	27.5	816	32.13	700	27.6
750	30	591	23.3	745	29.3	869	34.2	571	22.5	725	28.5	869	34.21	750	29.5
800	32	616	24.3	770	30.3	927	36.5	606	23.9	760	29.9	927	36.5	800	31.5
900	36	663	26.1	817	32.2	1032	40.6	653	25.7	807	31.8	1032	40.63	900	35.4
1000	40	714	28.1	868	34.2	1136	44.7	704	27.7	858	33.8	1136	44.72	1000	39.4
	42	714	28.1	868	34.2	1136	44.7	704	27.7	858	33.8	1136	44.72	1000	39.4
	44	765	30.1	919	36.2	1238	48.7	755	29.7	904	35.6	1238	48.74	1100	43.3
1200	48	820	32.3	974	38.3	1348	53.1	810	31.9	964	38.0	1348	53.07	1200	47.2
1400	54	-	-	-	-	-	-	925	36.4	1079	42.5	1574	61.97	1400	55.1
1500	60	-	-	-	-	-	-	972	38.2	1126	44.3	1672	65.83	1500	59.1
1600	66	-	-	-	-	-	-	1025	40.4	1179	46.4	1774	69.84	1600	63.0
1800	72	-	-	-	-	-	-	1123	44.2	1277	50.3	1974	77.72	1800	70.9
2000	78	-	-	-	-	-	-	1223	48.1	1377	54.2	2174	85.59	2000	78.7

- not available

© Siemens AG 2015

Weight

		7ME6520 NBR or EPDM liner										7ME6580 Ebonite liner	
Nominal size		PN 10		PN 16		PN 40		Class 150/AWWA		AS		PN 16	
[mm]	[inch]	[kg]	[lb]	[kg]	[lb]	[kg]	[lb]	[kg]	[lb]	[kg]	[lb]	[kg]	[lb]
15	½	-	-	-	-	4	9	4	9	4	9	5	11
25	1	-	-	-	-	6	12	5	11	4	9	5	11
40	1½	-	-	-	-	8	18	7	15	7	15	8	17
50	2	-	-	9	20	-	-	8	20	9	20	9	20
65	2½	-	-	10.7	24	-	-	11	24	10.7	24	11	24
80	3	-	-	11.6	26	-	-	13	28	11.6	26	12	26
100	4	-	-	15.2	33	-	-	19	41	15.2	33	16	35
125	5	-	-	20.4	45	-	-	24	52	-	-	19	42
150	6	-	-	26	57	-	-	29	64	26	57	27	60
200	8	48	106	48	106	-	-	56	124	48	106	40	88
250	10	64	141	69	152	-	-	79	174	69	152	60	132
300	12	76	167	86	189	-	-	110	243	86	189	80	176
350	14	104	229	125	274	-	-	139	307	115	254	110	242
400	16	119	263	143	314	-	-	159	351	125	277	125	275
450	18	136	299	173	381	-	-	182	400	141	311	175	385
500	20	163	359	223	491	-	-	225	495	189	418	200	440
600	24	236	519	338	744	-	-	320	704	301	664	287	633
700	28	270	595	314	692	-	-	273	602	320	704	330	728
750	30	-	-	-	-	-	-	329	725	-	-	360	794
800	32	346	763	396	873	-	-	365	804	428	944	450	992
900	36	432	951	474	1043	-	-	495	1089	619	1362	530	1168
1000	40	513	1130	600	1321	-	-	583	1282	636	1399	660	1455
	42	-	-	-	-	-	-	687	1512	-	-	-	-
	44	-	-	-	-	-	-	763	1680	-	-	1140	2513
1200	48	643	1415	885	1948	-	-	861	1896	813	1789	1180	2601
1400	54	1592	3510	-	-	-	-	-	-	-	-	1600	3528
1500	60	-	-	-	-	-	-	-	-	-	-	2460	5423
1600	66	2110	4652	-	-	-	-	-	-	-	-	2525	5566
1800	72	2560	5644	-	-	-	-	-	-	-	-	2930	6460
2000	78	3640	8025	-	-	-	-	-	-	-	-	3665	8080

- not available

With transmitter MAG 5000 and MAG 6000 compact, weight is increased by approximately 0.8 kg (1.8 lb), with MAG 6000 I, weight is increased by 5.5 kg (12.1 lb).

3/12/18

© Siemens AG 2017

Overview

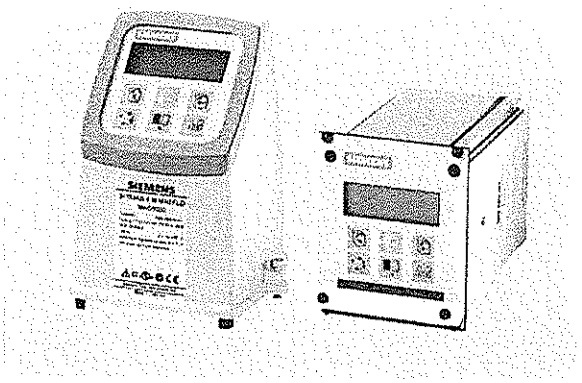

Transmitter MAG 5000/6000 compact version (left) and 19" insert version (right)

The MAG 5000 and 6000 are transmitters engineered for high performance, easy installation, commissioning and maintenance. The transmitters evaluate the signals from the SITRANS F M sensors type MAG 1100, MAG 1100 F, MAG 3100, MAG 3100 P and MAG 5100 W.

Transmitter types:

- MAG 5000: Max. measuring error ± 0.4 % ± 1 mm/s (incl. sensor)
- MAG 6000: Max. measuring error ± 0.2 % ± 1 mm/s (incl. sensor, see also sensor specifications) and with additional features such as: "plug & play" add-on bus modules; integrated batch functions.

Benefits

- Superior signal resolution for optimum turn down ratio
- Digital signal processing with many possibilities
- Automatic reading of SENSORPROM data for easy commissioning
- User configurable operation menu with password protection.
- 3 lines, 20 characters display in 11 languages.
- Flow rate in various units
- Totalizer for forward, reverse and net flow as well as additional information available
- Multiple functional outputs for process control, minimum configuration with analogue, pulse/frequency and relay output (status, flow direction, limits)
- Comprehensive self-diagnostic for error indication and error logging (see under SITRANS F M diagnostics)
- Batch control (MAG 6000 only)
- Custody transfer approval: PTB, OIML R 117, OIML R 49, MI-001, PTB K 7.2 and OE12/C 040 for chilled water
- MAG 6000 with add-on bus modules for HART, FOUNDATION Fieldbus H1, DeviceNet, Modbus RTU/RS 485, PROFIBUS PA and DP

Application

The SITRANS F M flowmeters are suitable for measuring the flow of almost all electrically conductive liquids, pastes and slurries. The main applications can be found in:

- Water and waste water
- Chemical and pharmaceutical industries
- Food and beverage industries
- Power generation and utility

Design

The transmitter is designed as either IP67 NEMA 4X/6 enclosure for compact or wall mounting or 19" version as a 19" insert as a base to be used in:

- 19" rack systems
- Panel mounting IP20/NEMA 1 (prepared for IP65/NEMA 2 display side)
- Back of panel mounting IP20/NEMA 1
- Wall mounting IP66/NEMA 4X

Several options on 19" versions are available such as:

- Transmitters mounted in safe area for Ex ATEX approved flow sensors (incl. barriers)
- Transmitters with electrode cleaning unit on request

Function

The MAG 5000/6000 are transmitters with a built-in alphanumeric display in several languages. The transmitters evaluate the signals from the associated electromagnetic sensors and also fulfil the task of a power supply unit which provides the magnet coils with a constant current.

Further information on connection, mode of operation and installation can be found in the data sheets for the sensors.

Displays and controls

Operation of the transmitter can be carried out using:

- Control and display unit
- HART communicator
- PC/laptop and SIMATIC PDM software via HART communication
- PC/laptop and SIMATIC PDM software using PROFIBUS or Modbus communication

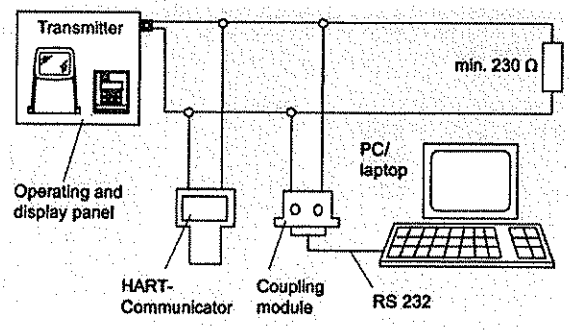

HART communication

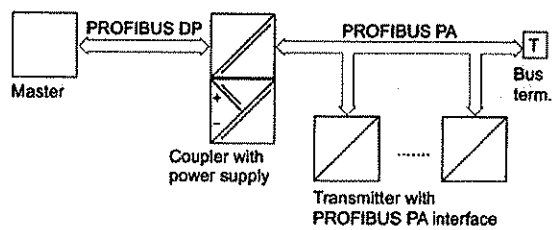

PROFIBUS PA communication

© Siemens AG 2017

Technical specifications

Mode of operation and design	
Measuring principle	Electromagnetic with pulsed constant field
Empty pipe	Detection of empty pipe (special cable required in remote mounted installation)
Excitation frequency	Depend on sensor size
Electrode input impedance	> 1 x 10^{14} Ω
Input	
Digital input	11 ... 30 V DC, R_i = 4.4 KΩ
• Activation time	50 ms
• Current	$I_{11\ V\ DC}$ = 2.5 mA, $I_{30\ V\ DC}$ = 7 mA
Output	
Current output	
• Signal range	0 ... 20 mA or 4 ... 20 mA
• Load	< 800 Ω
• Time constant	0.1 ... 30 s, adjustable
Digital output	
• Frequency	0 ... 10 kHz, 50 % duty cycle (uni/bidirectional)
• Pulse (active)	24 V DC, 30 mA, 1 KΩ ≤ R_i ≤ 10 KΩ, short-circuit-protected (power supplied from flowmeter)
• Pulse (passive)	3 ... 30 V DC, max. 110 mA, 200 Ω ≤ R_i ≤ 10 KΩ (powered from connected equipment)
• Time constant	0.1 ... 30 s, adjustable
Relay output	
• Time constant	Changeover relay, same as current output
• Load	42 V AC/2 A, 24 V DC/1 A
Low flow cut off	0 ... 9.9 % of maximum flow
Galvanic isolation	All inputs and outputs are galvanically isolated.
Max. measuring error (incl. sensor and zero point)[1]	
• MAG 5000	0.4 % ±1 mm/s
• MAG 6000	0.2 % ±1 mm/s
Rated operation conditions	
Ambient temperature	
• Operation	• Display version: -20 ... +60 °C (-4 ... +140 °F) • Blind version: -20 ... +60 °C (-4 ... +140 °F) • MI-001 version -25 ... +55 °C (-13 ... +131 °F) • Custody transfer (CT) version -20 ... +50 °C (-4 ... +122 °F)
• Storage	-40 ... +70 °C (-40 ... +158 °F)
Mechanical load (vibration)	
Compact version	18 ... 1000 Hz, 3.17 g RMS, sinusoidal in all directions to IEC 60068-2-36
19" insert	1 ... 800 Hz, 1 g, sinusoidal in all directions to IEC 60068-2-36
Degree of protection	
Compact version	IP67/NEMA 4X/6 to IEC 529 and DIN 40050 (1 mH_2O 30 min)
19" insert	IP20/NEMA 1 to IEC 529 and DIN 40050
EMC performance	IEC/EN 61326-1 (all environments) IEC/EN 61326-2-5

Display and keypad	
Totalizer	Two eight-digit counters for forward, net or reverse flow
Display	Background illumination with alphanumeric text, 3 x 20 characters to indicate flow rate, totalized values, settings and faults; Reverse flow indicated by negative sign
Time constant	Time constant as current output time constant
Design	
Enclosure material	
• Compact version	Fiber glass reinforced polyamide; stainless steel AISI 316/1.4436 (IP65)
• 19" insert	Standard 19" insert of aluminum/steel (DIN 41494), width: 21 TE, height: 3 HE
• Back of panel	IP20/NEMA 1; Aluminum
• Panel mounting	IP20/NEMA 1 (prepared for IP65/NEMA 2 display side); ABS plastic
• Wall mounting	IP66/NEMA 4X; ABS plastic
Dimensions	
Compact version	See dimensional drawings
19" insert	See dimensional drawings
Weight	
Compact version	0.75 kg (2 lb)
19" insert	See dimensional drawings
Power supply	• 115 ... 230 V AC +10 % -15 %, 50 ... 60 Hz • 11 ... 30 V DC or 11 ... 24 V AC
Power consumption	• 230 V AC: 17 VA • 24 V AC: 9 VA, I_N = 380 mA, I_{ST} = 8 A (30 ms) • 12 V DC: 11 W, I_N = 920 mA, I_{ST} = 4 A (250 ms) • 24 V DC: 8.4 VA, I_N = 350 mA, I_{ST} = 4 A (10 ms) I_{ST}= 4 A (250 ms): For solar panel please secure stable current supply
Certificates and approvals	
General purpose	• CE (LVD, EMC, PED, RoHS) • UL (c-UL-us)
Hazardous areas	• FM, CSA - NI Class I Div. 2 Groups A, B, C, D
Custody transfer	• Cold water: MI-001 • Chilled water - PTB K 7.2 (Germany) - OE12/C 040 (Austria) - TS 27.02 008 (Denmark)
Marine (only for remote version with MAG 5100 W, DN 50 ... DN 300)	• ABS • Bureau Veritas • DNV • GL • Lloyd's Register of Shipping
Others	• CMC/CPA (China) • C-TICK (Australia and New Zealand EMC) • EAC (Russia,Belarus, Kazakhstan) • KCC (South Korea)

3/12/18

© Siemens AG 2017

Communication	
Standard	
• MAG 5000	Without serial communication or HART as option
• MAG 6000	Prepared for client-mounted add-on modules
Optional (MAG 6000 only)	HART, Modbus RTU/RS 485, FOUNDATION Fieldbus H1, DeviceNet, PROFIBUS PA, PROFIBUS DP as add-on modules
• MAG 5000/6000 CT	No communication moduls approved

[1] For detailed accuracy specifications, see page 3/22

Safety barrier (e/ia)

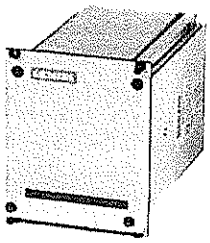

Application	**For use with MAG 5000/6000 19" and MAG 1100 Ex/MAG 3100 Ex**		
Ex approval	MAG 1100 Ex [EEx e ia] IIB ATEX, EAC Ex		
	MAG 3100 Ex [EEx e ia] IIC ATEX, EAC Ex		
Cable parameter	Group	Capacity in µF	Inductance in mH
Electrode	IIC	≤ 4.1	≤ 80
	IIB	≤ 45	≤ 87
	IIA	≤ 45	≤ 87
Ambient temperature			
• During operation	-20 ... +50 °C (-4 ... +122 °F)		
• During storage	-20 ... +70 °C (-4 ... +158 °F)		
Enclosure			
• Material	Standard 19" insert in aluminum/steel (DIN 41494)		
• Width	21 TE (4.75")		
• Height	3 HE (5.25")		
• Rating	IP20 / NEMA 1 to EN 60529		
• Mechanical load	1 g, 1 ... 800 Hz sinusoidal in all directions to EN 60068-2-36		

© Siemens AG 2017

Selection and Ordering data

Transmitter MAG 5000

Description	Article No.	
Transmitter MAG 5000 Blind for compact and wall mounting; IP67/NEMA 4X/6, fibre glass reinforced polyamide		
• 11 ... 30 V DC/ 11 ... 24 V AC	✧ **7ME6910-1AA30-0AA0**	
• 115 ... 230 V AC, 50/60 Hz	✧ **7ME6910-1AA10-0AA0**	
Transmitter MAG 5000 Display for compact and wall mounting; IP67/NEMA 4X/6, fibre glass reinforced polyamide		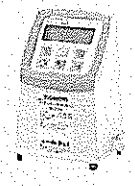
• 11 ... 30 V DC/ 11 ... 24 V AC	✧ **7ME6910-1AA30-1AA0**	
• 115 ... 230 V AC, 50/60 Hz	✧ **7ME6910-1AA10-1AA0**	
• 115 ... 230 V AC, 50/60 Hz, with HART	✧ **7ME6910-1AA10-1BA0**	
Transmitter MAG 5000 CT for compact and wall mounting, approved for custody transfer (only with approval marks, no verification – only a complete flowmeter can be verified, i.e. sensor together with the transmitter); IP67/NEMA 4X/6, fibre glass reinforced polyamide		
• 11 ... 30 V DC/ 11 ... 24 V AC	**7ME6910-1AA30-1AB0**	
• 115 ... 230 V AC, 50/60 Hz	**7ME6910-1AA10-1AB0**	
Transmitter MAG 5000 for 19" rack and wall mounting		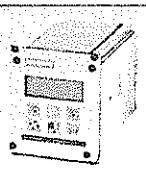
• 11 ... 30 V DC/ 11 ... 24 V AC	✧ **7ME6910-2CA30-1AA0**	
• 115 ... 230 V AC, 50/60 Hz	**7ME6910-2CA10-1AA0**	

✧ We can offer shorter delivery times for configurations designated with the Quick Ship Symbol ✧. For details see page 10/11 in the appendix

Transmitter MAG 6000

Description	Article No.	
Transmitter MAG 6000 Blind for compact and wall mounting; IP67/NEMA 4X/6, fibre glass reinforced polyamide		
• 11 ... 30 V DC/ 11 ... 24 V AC	✧ **7ME6920-1AA30-0AA0**	
• 115 ... 230 V AC, 50/60 Hz	✧ **7ME6920-1AA10-0AA0**	
Transmitter MAG 6000 for compact and wall mounting; IP67/NEMA 4X/6, fibre glass reinforced polyamide		
• 11 ... 30 V DC/ 11 ... 24 V AC	✧ **7ME6920-1AA30-1AA0**	
• 115 ... 230 V AC, 50/60 Hz	✧ **7ME6920-1AA10-1AA0**	
Transmitter MAG 6000 for compact and wall mounting; IP65/NEMA 4, stainless steel AISI 316/1.4436 (only for sensor with stainless steal terminal box) (for remote version order stainless steal terminal box separately)		
• 11 ... 30 V DC/ 11 ... 24 V AC	**7ME6920-1QA30-1AA0**	
• 115 ... 230 V AC, 50/60 Hz	**7ME6920-1QA10-1AA0**	
Transmitter MAG 6000 CT for compact and wall mounting, approved for custody transfer, without verification (no approval marks - only a complete flowmeter can be verified, i.e. sensor together with the transmitter); IP67/NEMA 4X/6, fibre glass reinforced polyamide		
• 11 ... 30 V DC/ 11 ... 24 V AC	**7ME6920-1AA30-1AD0**	
• 115 ... 230 V AC, 50/60 Hz	**7ME6920-1AA10-1AD0**	
Spare part transmitter for CT systems produced before 12/2016 or with firmware version 3.03		
• 11 ... 30 V DC/ 11 ... 24 V AC	**7ME6920-1AA30-1AB0**	
• 115 ... 230 V AC, 50/60 Hz	**7ME6920-1AA10-1AB0**	
Transmitter MAG 6000 SV for compact and wall mounting; special excitation frequency 44 Hz for Batch application DN ≤ 25/1" IP67/NEMA 4X/6, fibre glass reinforced polyamide		
11 ... 30 V DC/ 11 ... 24 V AC	**7ME6920-1AB30-1AA0**	
115 ... 230 V AC, 50/60 Hz	**7ME6920-1AB10-1AA0**	

© Siemens AG 2017

Description	Article No.	
Transmitter MAG 6000 for 19" rack and wall mounting		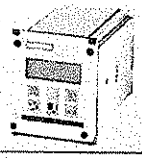
• 11 ... 30 V DC/ 11 ... 24 V AC	☆ **7ME6920-2CA30-1AA0**	
• 115 ... 230 V AC, 50/60 Hz	☆ **7ME6920-2CA10-1AA0**	
Transmitter MAG 6000 SV for 19" rack and wall mounting; special excitation frequency 44 Hz for Batch application DN ≤ 25/1"		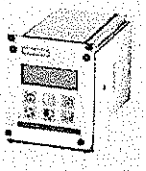
• 11 .. 30 V DC/ 11 ... 24 V AC	**7ME6920-2CB30-1AA0**	
• 115 ... 230 V AC, 50/60 Hz	**7ME6920-2CB10-1AA0**	
MAG 6000 19" insert, complete mounted with IP66/ NEMA 4X wall mounting enclosure in ABS plastic; 115 ... 230 V AC, 50/60 Hz; cable gland PG13.5	**7ME6920-2EA10-1AA0**	
MAG 6000 SV 19" insert with safety barrier for Ex-approved sensors, complete mounted with IP66/NEMA 4X wall mounting enclosure in ABS plastic, 115 ... 230 V AC, 50/60 Hz; cable gland PG13.5		
• For ATEX 2G D sensors	**7ME6920-2MA11-1AA0**	
MAG 6000 SV 19" insert, complete mounted with IP66/NEMA 4X wall mounting enclosure in ABS plastic, special excitation frequency 44 Hz for Batch application DN ≤ 25/1"; cable gland PG13.5		
• 11 ... 30 V DC, 11 ... 24 V AC	**7ME6920-2EB30-1AA0**	
• 115 ... 230 V AC, 50/60 Hz	**7ME6920-2EB10-1AA0**	

☆ We can offer shorter delivery times for configurations designated with the Quick Ship Symbol ☆. For details see page 10/11 in the appendix.

Operating instructions for SITRANS F M MAG 5000/6000

Description	Article No.
For SITRANS F M MAG 5000/6000 IP67	
• English	**A5E02338368**
• German	**A5E02944982**
For SITRANS F M MAG 5000/6000 19"	
• English	**A5E02082880**

All literature is available to download for free, in a range of languages, at www.siemens.com/processinstrumentation/documentation

Communication modules for MAG 6000

Description	Article No.	
HART (not for MAG 6000 I)	☆ **FDK:085U0226**	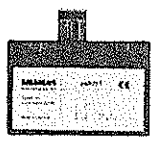
Modbus RTU/RS 485	☆ **FDK:085U0234**	
PROFIBUS PA Profile 3	☆ **FDK:085U0236**	
PROFIBUS DP Profile 3	☆ **FDK:085U0237**	
DeviceNet	☆ **FDK:085U0229**	
FOUNDATION Fieldbus H1	**A5E02054250**	

Operating instructions for SITRANS F add-on modules

Description	Article No.
HART	
• English	**A5E03089708**
PROFIBUS PA/DP	
• English	**A5E00726137**
• German	**A5E01026429**
Modbus	
• English	**A5E00753974**
• German	**A5E03089262**
FOUNDATION Fieldbus	
• English	**A5E02318728**
• German	**A5E02488856**
DeviceNet	
• English	**A5E03089720**

All literature is available to download for free, in a range of languages, at www.siemens.com/processinstrumentation/documentation

Accessories for MAG 5000 and MAG 6000

Description	Article No.	
Accessory kit for remote use of sensor with two 5-pin terminal blocks	**A5E34827189**	
Wall mounting unit for MAG 5000/6000 IP67/NEMA 4X/6, terminal box in polyamide [1]		
• 4 x M20 cable glands	☆ **FDK:085U1018**	
• 4 x ½" NPT cable glands	☆ **FDK:085U1053**	
Special wall mounting unit for MAG 5000/6000 IP67/ NEMA 4X/6, mounting bracket in stainless steel AISI 316 (1.4401), terminal box in polyamide		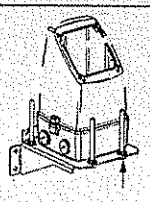
• 4 x M20 cable glands	☆ **A5E36699697**	
• 4 x ½" NPT cable glands	☆ **A5E36699699**	
Sun lid for MAG 5000/6000 transmitter (Frame and lid)	**A5E02328485**	
Standard coil or electrode cable, 3 x 1.5 mm²/ 18 gage, single shielded with PVC jacket, Temp. range: -30 ... +70 °C (-22 .. +158 °F)		
• 5 m (16.5 ft)	☆ **A5E02296523**	
• 10 m (33 ft)	☆ **FDK:083F0121**	
• 20 m (65 ft)	☆ **FDK:083F0210**	
• 30 m (98 ft)	☆ **A5E02297309**	
• 40 m (130 ft)	☆ **FDK:083F0211**	
• 50 m (164 ft)	☆ **A5E02297317**	
• 60 m (200 ft)	**FDK:083F0212**	
• 100 m (330 ft)	**FDK:083F0213**	
• 150 m (500 ft)	**FDK:083F3052**	
• 200 m (650 ft)	**FDK:083F3053**	
• 500 m (1650 ft)	**FDK:083F3054**	

☆ We can offer shorter delivery times for configurations designated with the Quick Ship Symbol ☆. For details see page 10/11 in the appendix

[1] For stainless steel wall mounting kit, order:
- M20: FDK:085U1018 and A5E00836867
- ½ NPT: FDK:085U1053 and A5E00836868

© Siemens AG 2017

Description	Article No.
Special electrode cable[1] (empty pipe detection or low conductivity), 3 x 0.25 mm², double shielded with PVC jacket; Temperature range : -30 ... +70 °C (-22 ... +158 °F)	
• 10 m (33 ft)	☆ **FDK:083F3020**
• 20 m (65 ft)	☆ **FDK:083F3095**
• 40 m (130 ft)	**FDK:083F3094**
• 60 m (200 ft)	**FDK:083F3093**
• 100 m (330 ft)	**FDK:083F3092**
• 150 m (500 ft)	**FDK:083F3056**
• 200 m (650 ft)	**FDK:083F3057**
• 500 m (1650 ft)	**FDK:083F3058**
Low-noise electrode coax cable for low conductivity and high vibration levels, 3 x 0.13 mm²	
• 2 m (6.6 ft)	**A5E02272692**
• 5 m (16.5 ft)	**A5E02272723**
• 10 m (33 ft)	**A5E02272730**
Cable kit including standard coil cable (3 x 1.5 mm²/ 18 gage, single shielded with PVC jacket) and special electrode cable[1] (3 x 0.25 mm², double shielded with PVC jacket); Temperature range: -30 ... +70 °C (-22 ... +158 °F)	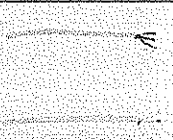
• 5 m (16.5 ft)	☆ **A5E02296329**
• 10 m (33 ft)	☆ **A5E01181647**
• 15 m (49 ft)	☆ **A5E02296464**
• 20 m (65 ft)	☆ **A5E01181656**
• 25 m (82 ft)	☆ **A5E02296490**
• 30 m (98 ft)	☆ **A5E02296494**
• 40 m (130 ft)	☆ **A5E01181686**
• 50 m (164 ft)	☆ **A5E02296498**
• 60 m (200 ft)	**A5E01181689**
• 100 m (330 ft)	**A5E01181691**
• 150 m (500 ft)	**A5E01181699**
• 200 m (650 ft)	**A5E01181703**
• 500 m (1650 ft)	**A5E01181705**
Potting kit for IP68/NEMA 6P sealing of sensor junction box	☆ **FDK:085U0220**
19" safety barrier (21 TE)[1] [EEx e ia] IIC for MAG 1100 Ex sensors and MAG 3100 Ex sensors 12 ... 24 V, 115 ... 230 V, incl. back plate (A5E02559810)	**FDK:083F5034** 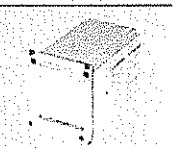
Front panel mounting enclosure IP65/NEMA 2 in ABS plastic for 19" insert (21 TE)	**FDK:083F5030** 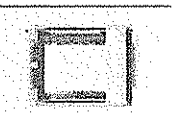
Front panel mounting enclosure IP65/NEMA 2 in ABS plastic for 19" insert (42 TE)	**FDK:083F5031** 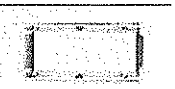

Description	Article No.
Panel mounting enclosure IP20/NEMA 1 in aluminium for 19" insert (21 TE)	**FDK:083F5032** 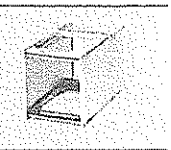
Panel mounting enclosure IP20/NEMA 1 in aluminium for 19" insert (42 TE)	**FDK:083F5033** 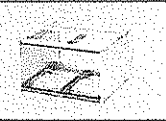
Wall mounting enclosure IP66/NEMA 4X in ABS plastic for 19" insert (cable glands and connection board not included)	
• 21 TE	**FDK:083F5037**
• 42 TE	**FDK:083F5038** 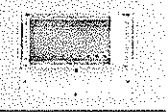
Front cover (7TE) for panel mounting enclosure	**FDK:083F4525**
Sun shield for MAG 5000/6000 transmitters in remote design	**A5E01209496** 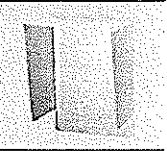
Sun Shield for MAG 5000/ 6000 transmitter in compact design on MAG 3100 (DN 15 ... 2000/½" ... 78") or MAG 5100 W (DN 150 ... 1200/6" ... 48")	**A5E01209500** 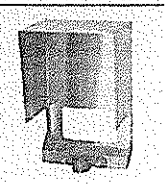

☆ We can offer shorter delivery times for configurations designated with the Quick Ship Symbol ☆. For details see page 10/11 in the appendix.

[1] Special cables cannot be used with 19" safety barrier

3/12/18

© Siemens AG 2017

Spare parts

Description	Article No.	
Connection board (for polyamide terminalbox)		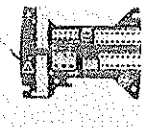
• 12 ... 24 V	**A5E02559817**	
• 115 ... 230 V	**A5E02559816**	
Connection board (for stainless steel terminal-box)		
• 12 ... 24 V	**A5E02604280**	
• 115 ... 230 V	**A5E02604272**	
Connection board MAG 5000/6000 19" insert for panel mounting enclosure, 12 ... 24 V/115 ... 230 V	**A5E02559809**	
Connection board MAG 5000/6000 19" insert with safety barrier for panel mounting enclosure, 12 ... 24 V/115 ... 230 V	**A5E02559810**	
Connection board MAG 5000/6000 19" insert with safety barrier for panel mounting enclosure, 12 ... 24 V/115 ... 230 V (only for sensors produced before October 2007)	**A5E02559811**	
Connection board MAG 5000/6000 19" insert with cleaning unit for panel mounting enclosure, 12 ... 24 V/115 ... 230 V	**FDK:083F4123**	
SENSORPROM memory unit (Sensor code and serial numbers must be specified on order)		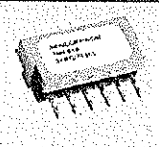
• 2 kB (for MAG 5000/6000/ MAG 6000 I)		
- 1 pc	**FDK:085U1005**	
- 10 pcs.	**FDK:083F5052**	
• 250 B (for MAG 2500/3000)	**FDK:085U1008**	
Display unit for MAG 5000/6000		
• Black neutral front	**FDK:085U1038**	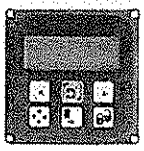
• Siemens front	**FDK:085U1039**	
HW key	**On request**	

Description	Article No.	
Cable glands (polyamide), 4 pcs.		
• M20	**A5E00822490**	
• ½" NPT	**A5E00822501**	
• PG 13.5, 2 pcs.	**FDK:083G0228**	½" NPT M20
Sealing screws for sensor/ transmitter, 2 pcs	**FDK:085U0221**	
Terminal box, in polyamide, inclusive lid, terminal blocks, gasket and screws		
• M20	**FDK:085U1050**	
• ½" NPT	**FDK:085U1052**	
Terminal box lid, in polyamide	**FDK:085U1003**	
Terminal box, in stainless steel, inclusive lid, terminal blocks, gasket and screws, for MAG 6000 in stainless steel and for all Ex sensors,		
• M20	**A5E00836867**	
• ½" NPT	**A5E00836868**	
Terminal box (3A) for MAG 1100 F in polyamide, inclusive lid, terminal blocks, gasket and screws		
• M20	**A5E00822478**	
• ½" NPT	**A5E00822479**	
Gasket for terminal box lid in polyamide and MAG 5000/6000 IP67/ NEMA 4X/6 (5 pc.)	**A5E37086797**	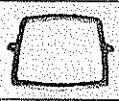
Spare part kit for remote use of sensor with 20 pcs. 5-pin terminal blocks	**A5E34346873**	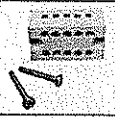
Connection board MAG 5000/6000 19" insert for wall mounting enclosure, 12 ... 24 V / 115 ... 230 V	**A5E02559813**	
Connection board MAG 5000/ 6000 19" insert with safety barrier for wall mounting enclosure, 12 ... 24 V/115 ... 230 V	**A5E02559814**	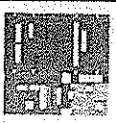
Connection board MAG 5000/ 6000 19" insert with safety barrier for wall mounting enclosure, 12 ... 24 V/115 ... 230 V (only for sensors produced before October 2007)	**A5E02559812**	
Connection board MAG 5000/ 6000 19" insert with cleaning unit for wall mounting enclosure, 12 ... 24 V/115 ... 230 V	**A5E02559815**	
SENSORPROM programmer with RS 232 interface	**FDK:083H4246**	

We can offer shorter delivery times for configurations designated with the Quick Ship Symbol ·. For details see page 10/11 in the appendix.

© Siemens AG 2017

Dimensional drawings

Transmitter IP67/NEMA 4X/6 compact polyamide

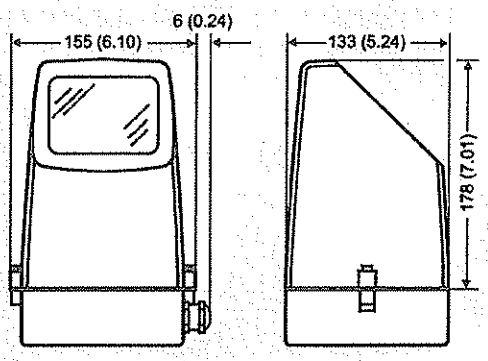

Transmitter compact mounted, dimensions in mm (inch)

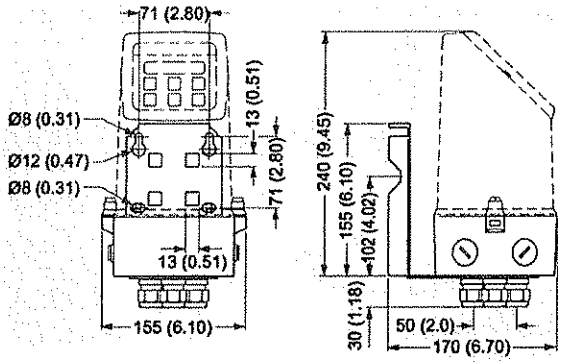

Transmitter wall mounted, dimensions in mm (inch)

Transmitter, 19" IP20/NEMA 1 standard unit

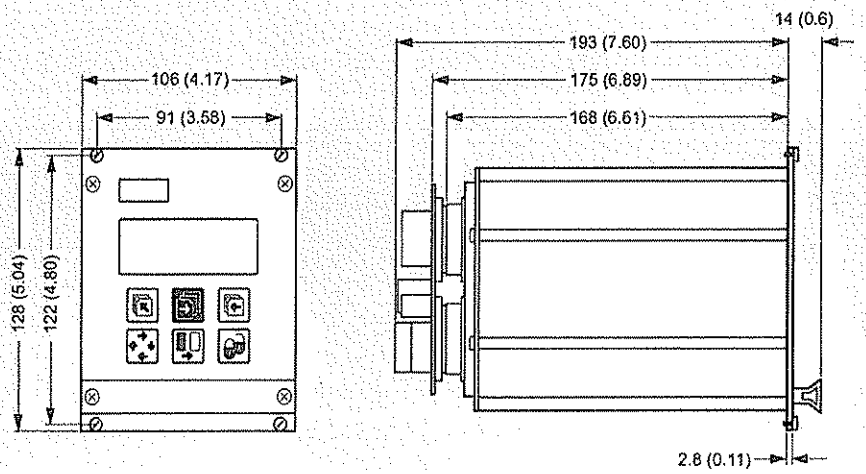

Weight incl. back print 0.8 kg (1.8 lbs)

Dimensions in mm (inch)

3/12/18

© Siemens AG 2017

Transmitter, wall mounting IP66/NEMA 4X, 21 TE

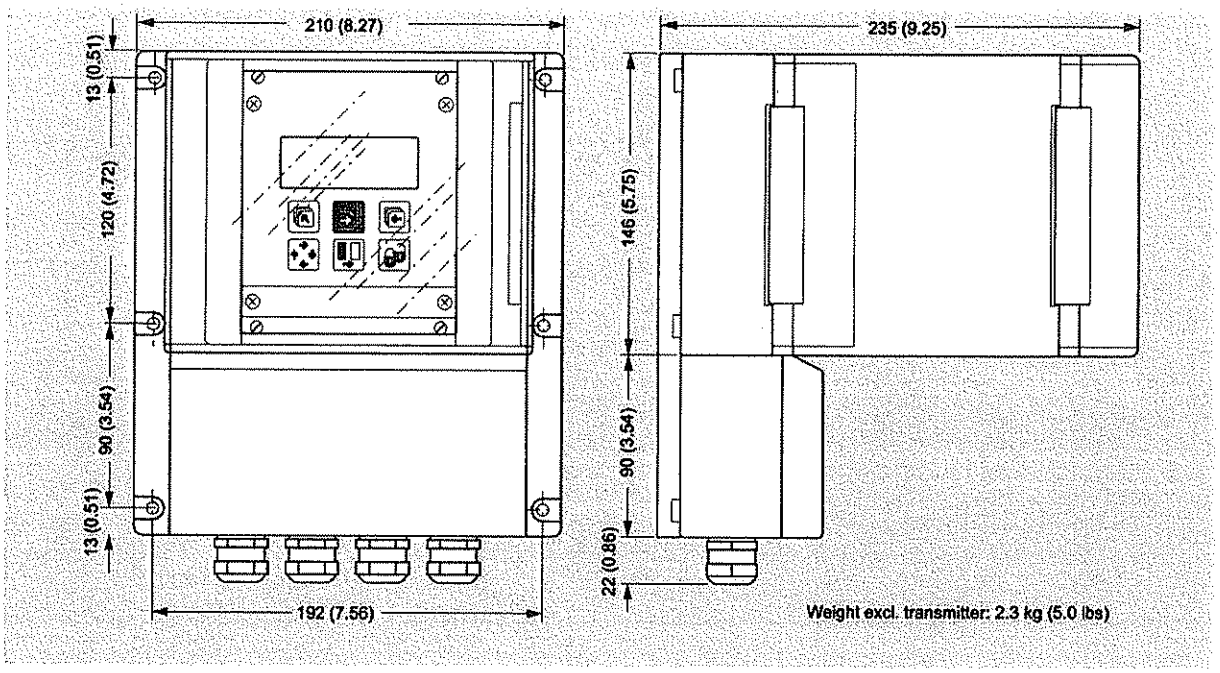

Dimensions in mm (inch)

Transmitter, wall mounting IP66/NEMA 4X, 42 TE

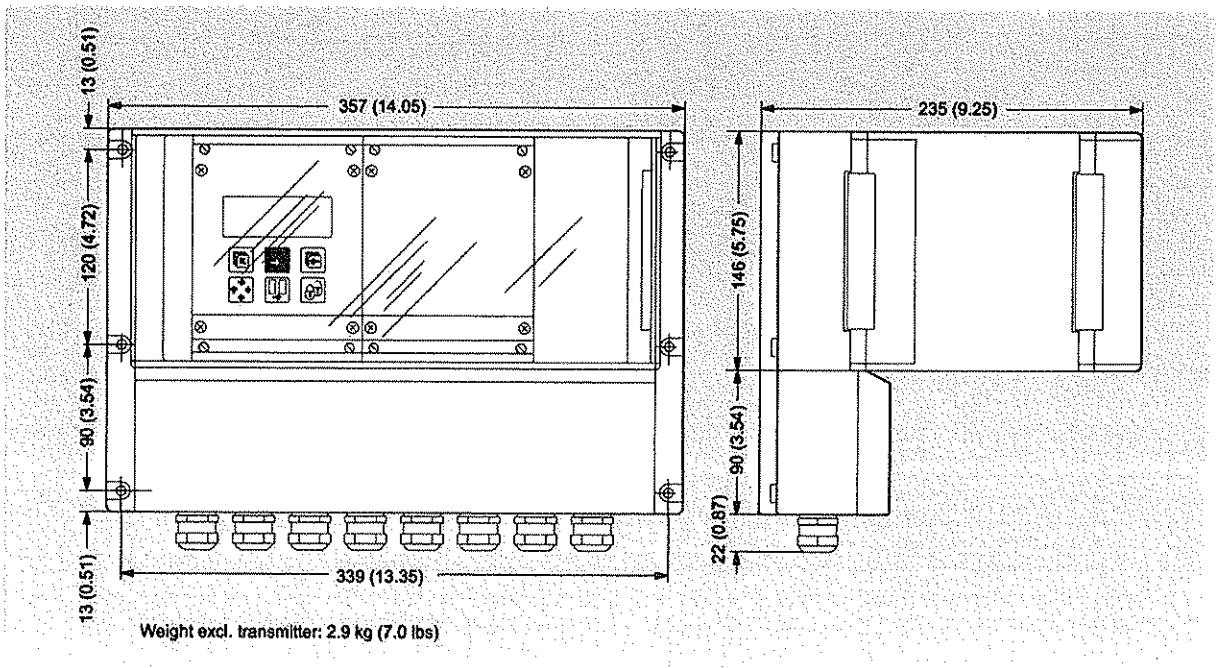

Dimensions in mm (inch)

© Siemens AG 2017

Transmitter, panel front IP20/NEMA 1, 21 TE

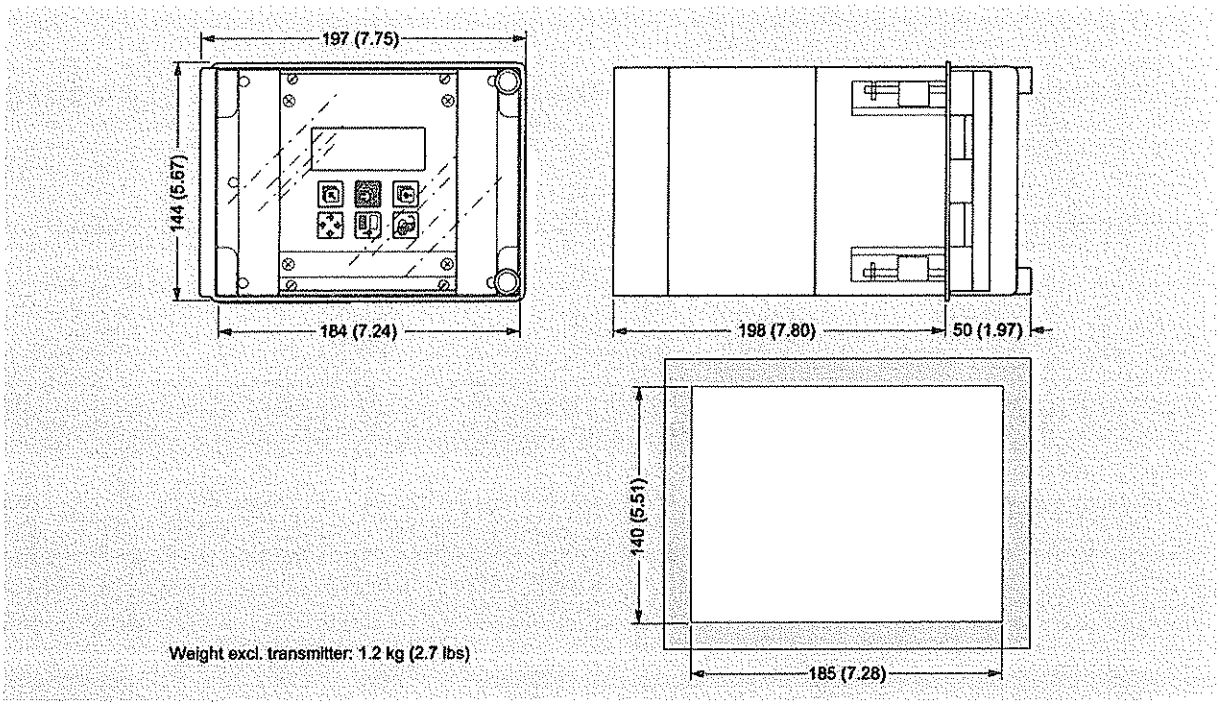

Dimensions in mm (inch)

Transmitter, panel front IP20/NEMA 1, 42 TE

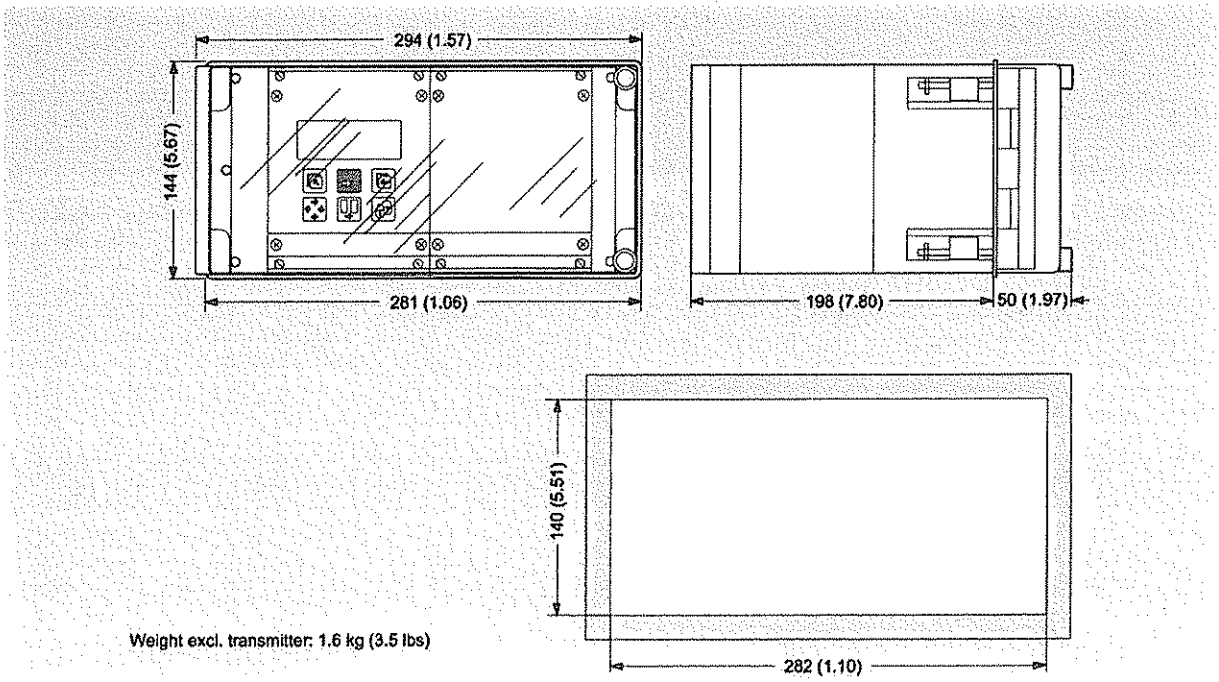

Dimensions in mm (inch)

3/12/18

© Siemens AG 2017

Transmitter, back of panel IP20/NEMA 1, 21 TE

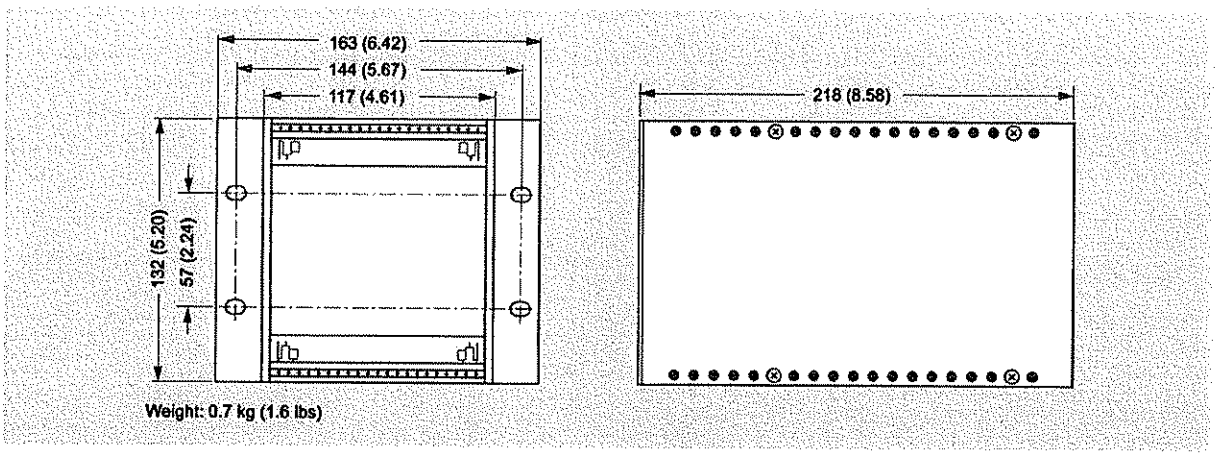

Dimensions in mm (inch)

Transmitter, back of panel IP20/NEMA 1, 42 TE

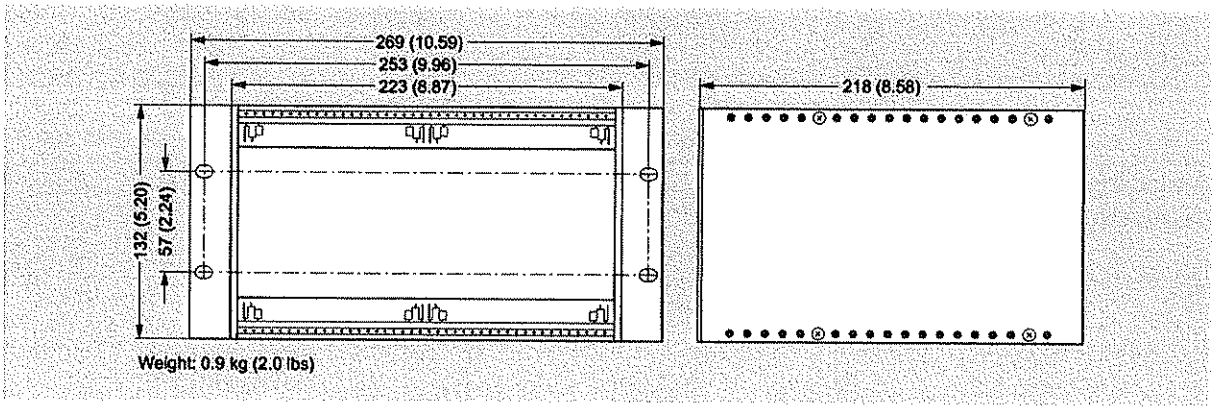

Dimensions in mm (inch)

© Siemens AG 2017

Schematics

Electrical connection

Grounding

PE must be connected due to safety class 1 power supply.

Mechanical counters

When mounting a mechanical counter to terminals 57 and 58 (active output), a 1000 µF capacitor must be connected to the terminals 56 and 58. Capacitor + is connected to terminal 56 and capacitor - to terminal 58.

Output cables

If the output cable length is long in noisy environment, we recommend to use shielded cable.

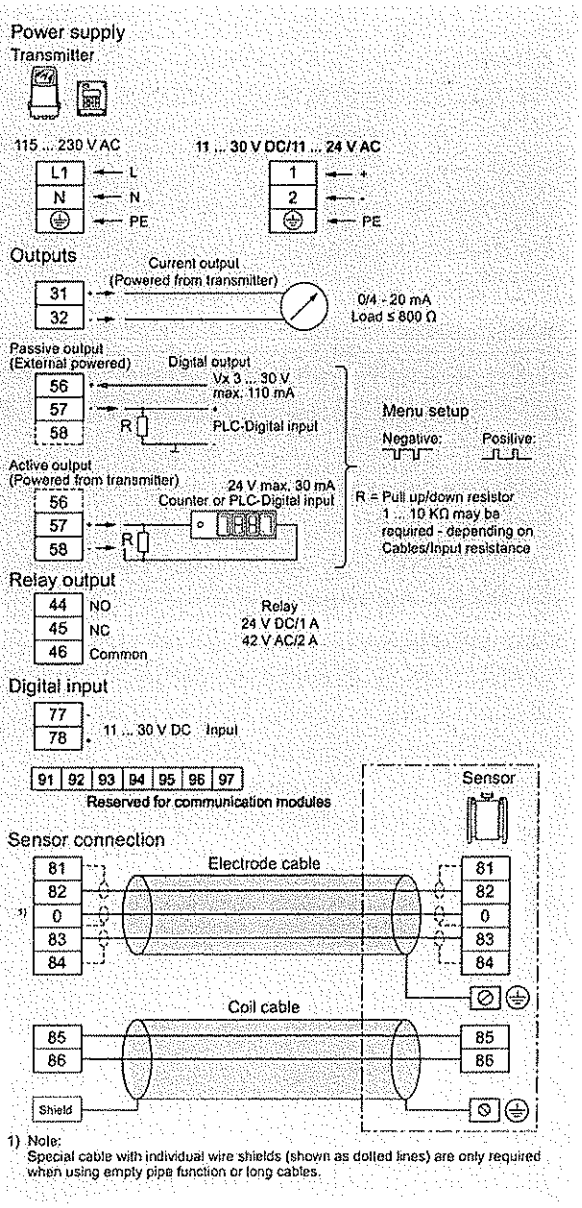

1) Note:
Special cable with individual wire shields (shown as dotted lines) are only required when using empty pipe function or long cables.

3/12/18

PH 6587 - PH 7687

pH / ORP controller

The **PH 6587** and **PH 7687** belong to the latest series of instruments developed by B&C Electronics. These products are the result of more than 40 years of experience in the measurement and control of pH and ORP.

The sensors and submersible probes in our catalog allow the visualization of the temperature value as well as the pH or ORP, making the instruments suitable for any type of application and installation.

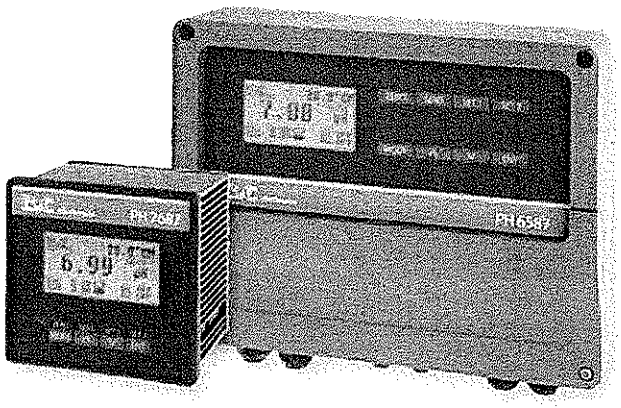

Main features

Range
0.00 ÷ 14.00 pH
-2000 ÷ 2000 mV
-10.0 ÷ 110.0 °C, 14.0 ÷ 230.0 °F

Display
The multi-line graphic display shows the values of the measures and the messages which guide the user through set-up, configuration and during normal operation.

Keyboard
There are dedicated keys to directly access zero and sensitivity calibration as well as set point configuration.

Operating mode
The meters can operate in automatic, measure or simulated mode so to facilitate start-up or maintenance.

Two filters software
The user can set two filters in order to obtain a stable reading and a faster response to the variations of the measurement in the process.

Two analog outputs
Can be addressed to any input and programmable 0/4 – 20 mA on two points of the scale. They allow PID control or transmission of the measured values.

Two On/Off regulators
Independent and addressable to any input with programmable set point on the scale.

PID output
During PID control through the analog output, the level of the actuation is displayed.
The user can select an FM regulation (pulse frequency) or WM (pulse width) addressed to the assigned relay.

Alarm
The relay is dedicated to min/max values of the measures, the excessive activation of relays and the presence of the logic inputs.

Logic inputs
Two free voltage contacts can generate a hold or alarm condition.

Autocleaning
A relay is dedicated to an external device for the sensor self-cleaning. This function is fully programmable through the controllers' software.

Universal power supply
From 85 to 264 Vac, 50/60 Hz.
The low voltage option allows to power the unit from 9 to 36 Vdc or from 12 to 24 Vac, 50/60 Hz.

Easy installation
All 6587 series of controllers have IP65 protection rating. They are suitable for wall mounting, or for DIN rail and handrail by means of optional accessories.
Series 7687 has an IP65 front panel and it is designed for customers who prefer panel mounting.

Compatible and versatile
The analyzers are compatible with all B&C Electronics' pH (glass or antimony) and ORP sensors.
The temperature measuring and compensation is done with Pt100 or Pt1000 two or three wires probes.

3/12/18

Applications

- Aquaculture
- Chemical industry
- Drinking water
- Electroplating
- Fertirrigation
- Food and beverage
- Paper and pulp
- Pharmaceutical
- Printing industry
- Swimming pools
- Textile industry
- Underground water
- Water treatment

Technical specifications

Inputs:	pH electrodes (glass or antimony) ORP electrodes Pt100 / Pt1000
Zero:	±2pH, ±100mV, ±5°C, ±9°F
Sensitivity:	80 ÷ 110 % (70 ÷ 140 % antimony)
Resolution:	0.01 pH, 1 mV, 0.1 °C/°F
Accuracy:	0.2 %
Repeatability:	0.1 %
Non-linearity:	0.1 %
Dual filter software:	0.4 ÷ 50.0 seconds for small and large variations
Dual analog output:	0-20 mA / 4-20 mA Rmax 600 Ω
Dual set points HI/LO:	ON/OFF - PFM - PWM, SPST relays
Hysteresis:	0 ÷ 1.40 pH, 0 ÷ 200 mV
Delay:	0 ÷ 100.0 seconds
Alarm:	SPDT relay with delay 0 ÷ 100.0 seconds
Cleaning function:	off / autoclean / manual, relay SPDT repetition time 0.1 ÷ 100.0 hours cleaning time 1.0 ÷ 60.0 seconds holding time 0.0 ÷20.0 minutes
SPST and SPDT relay contacts:	220V - 5 A resistive load
Operating temperature:	-10 ÷ 60 °C
Humidity:	95% without condensation
Power supply:	85 ÷ 264Vac - 50/60 Hz 9 ÷ 36Vdc, 12 ÷ 24Vac (option 091.42x)
Terminal blocks:	removable
Weight:	1360 g (PH 6587) 450 g (PH 7687)
Enclosure:	ABS, IP 65 protection (PH 6587) Metallic, IP 65 front panel only (PH 7687)
Dimensions:	256x230x89 mm (PH 6587) 98 x 98 x 104 mm, 90 x 90 x 95 mm panel cutout (PH 7687)
EMC/RFI conformity:	EN 61326
Registered design:	002564666-002 (PH 6587) 002564666-003 (PH 7687)

The technical specifications could be changed without notice.

3/12/18

Series 6587 dimensions and installation

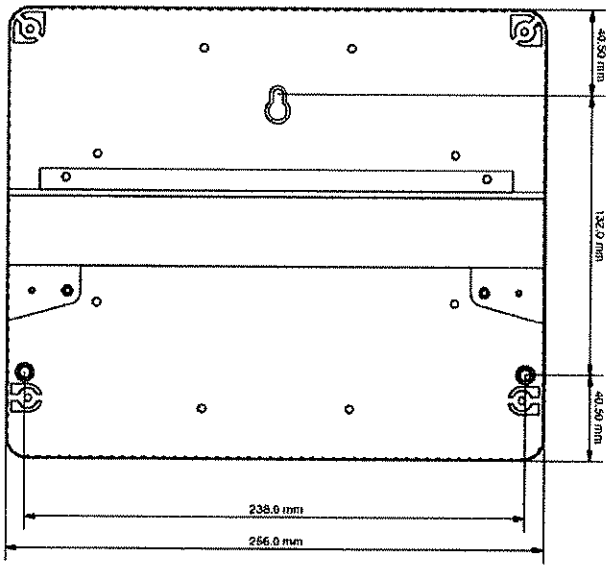

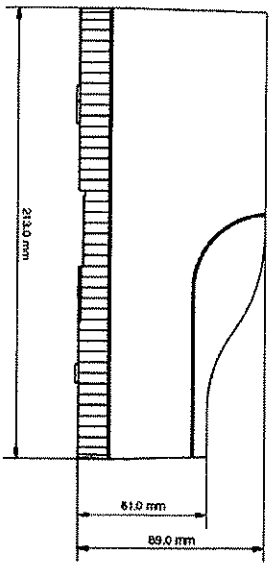

Wall

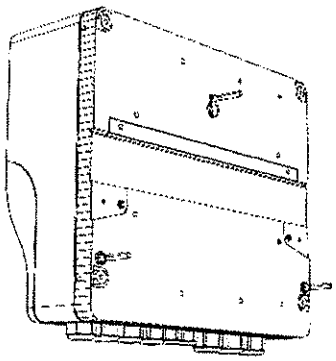

DIN rail

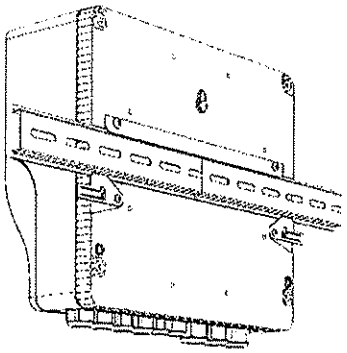

Pipe

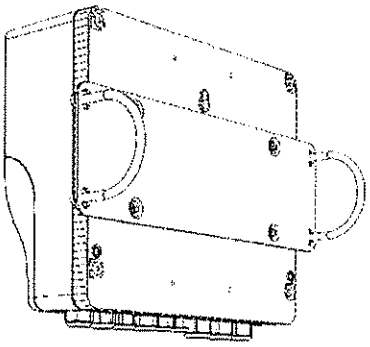

Series 7687 dimensions

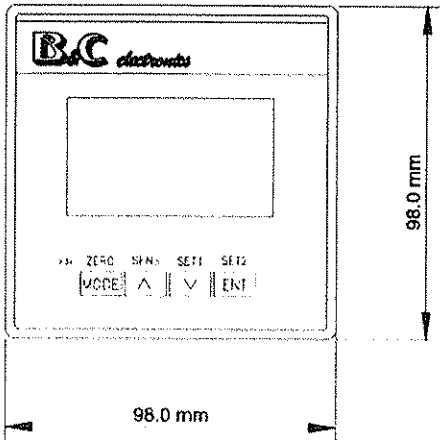

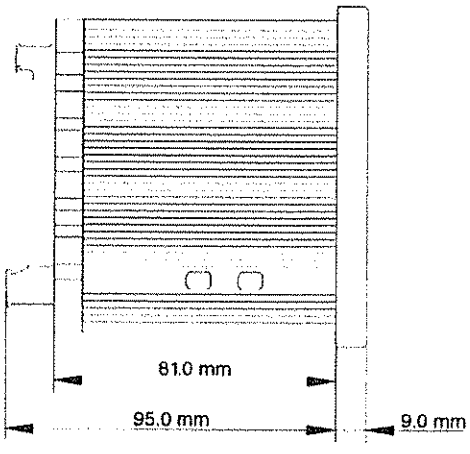

Epoxy pH electrodes

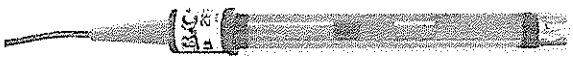

SZ 142
pH electrode Glass/Ref. combination, epoxy body, Gel sealed, cable 1.5 m with BNC.
Applications: clean water, portable instruments, swimming-pools.

SZ 145
pH electrode Glass/Ref. combination, epoxy body, Gel sealed, cable 9 m.
Applications: clean water at room temperature, industrial instruments. In-line up to 7 bar.

SZ 1021
pH electrode, Glass/Ref. combination, sealed Gel, epoxy body.
Low cost (10 pcs minimum order), cable 1 m with BNC.
Applications: portable instruments.

SZ 1025
pH electrode, Glass/Ref. combination, sealed Gel, epoxy body.
Low cost (10 pcs minimum order), cable 9 m.
Applications: clean water at room temperature, industrial instruments. In-line up to 7 bar.

SZ 151
pH electrode glass/Ref. double junction combination, epoxy body for high temperature applications, cable 1.5 m with BNC.
Applications: very contaminated liquids or high temperature.

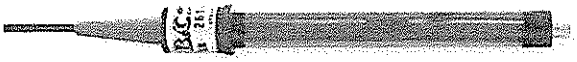

SZ 1075
Antimony pH electrode, combination, epoxy body, cable 9 m.
Applications: liquids with HF contents. It requires a special input pHmeter.

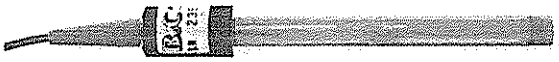

SZ 1131
Puncture tip pH electrode, epoxy body, PTFE junction.
1 m cable with BNC.
Applications: green houses, agricolture.

SZ 1093
Hydroponic pH electrode, epoxy body L=75 mm,
cable 3 m with BNC.
Applications: green houses, agricolture. In-line up to 7 bar.

Glass pH electrodes

SZ 160
pH Electrode Glass/Ref combination, glass body, anular junction, S7 connector.
Applications: contaminated liquids, portable instruments, laboratory.

SZ 161
pH Electrode Glass/Ref combination, glass body, anular junction, cable 1.5 m with BNC.
Applications: contaminated liquids, portable instruments, laboratory. In line up to 10 bar.

SZ 165
pH Electrode Glass/Ref combination, glass body, anular junction, cable 9 m.
Applications: general purpose, industrial meters, in line up to 10 bar.

SZ 171
Same as SZ 173. Cable 1.5 m with BNC.
Applications: contaminated liquids, amplified probes, portable instruments.

SZ 173
pH Electrode Glass/Ref combination, glass body, double anular junction, cable 9 m.
Applications: contaminated liquids, amplified probes, industrial and heavy applications. In line up to 10 bar.

SZ 195.2
pH Electrode Glass GX-V/Ref combination, glass body, low alkaline error, double anular junction, high temperature gel, cable 9 m.
Applications: contaminated and high temperature liquids, industrial and heavy applications. In line up to 10 bar.

SZ 1031
pH electrode, Glass/Ref. combination refillable, glass body, cable 1.5 m with BNC.
Applications: very contaminated liquids, portable instruments, laboratory.

Technical Specifications

Type	Membrane	R. Mohm at 25 °C	Range pH	Temperature °C	Length mm	Diameter mm	Reference
SZ 142	GX 2	50	0 / 13	0 / 60	110	12	Ag/AgCl
SZ 145	GX 2	50	0 / 13	0 / 60	110	12	Ag/AgCl
SZ 1021	GX 2	50	0 / 13	0 / 60	110	12	Ag/AgCl
SZ 1025	GX 2	50	0 / 13	0 / 60	110	12	Ag/AgCl
SZ 151	GX 2	100	0 / 13	-5 / 130	110	12	Ag/AgCl e KNO3
SZ 160	GX 2	50	0 / 13	0 / 100	110	12	Ag/AgCl
SZ 161	GX 2	50	0 / 13	0 / 100	110	12	Ag/AgCl
SZ 165	GX 2	50	0 / 13	0 / 100	110	12	Ag/AgCl
SZ 171	GX 2	50	0 / 13	0 / 100	110	12	Ag/AgCl e KNO3
SZ 173	GX 2	50	0 / 13	0 / 100	110	12	Ag/AgCl e KNO3
SZ 195.2	GX-V	200	0 / 14	-5 / 130	110	12	Ag/AgCl e KNO3
SZ 1031	GX2	50	0 / 13	0 / 80	110	12	Ag/AgCl
SZ 1075	Antimony	-	2 / 11	-5 / 100	110	12	Ag/AgCl
SZ 1093	GX2	50	0 / 13	0 / 80	75	12	Ag/AgCl
SZ 1131	GX1	300	0 / 12	-5 / 100	110	9.5	Ag/AgCl

pH autoclean flat electrodes

This is a new and more rugged flat electrodes generation.
They may be used in immersion or in-line for an autoclean effect by the liquid flow.

The reference electrode is a double junction in order to ensure a long life even in liquid containing Ammonia, Chlorine, Cyanide, Sulfide and other contaminating ions.

The body is in PVDF, corrosion resistant and food compatible.
The special shape protects mechanically the sensing parts.

SZ 1140
pH electrode, PTFE double junction, polymeric gel.
Range: 0/12 pH
Temperature: 0/100 °C
Pressure: 10 bar
Body: in PVDF, DL connector, 3/4" NPT thread
Length: 140 mm (45 mm in immersion)
Cable: SZ 947, L=8 m (not included)

SZ 1150
pH electrode, PTFE double junction, polymeric gel, built-in Pt100.
Range: 0/12 pH
Temperature: 0/100 °C
Pressure: 10 bar
Body: in PVDF, Military 4-pin connector, 3/4" NPT thread
Length: 140 mm (45 mm in immersion)
Cable SZ 9441: 10 m + connector (to be order separately)

SZ 2060
ORP electrode, PTFE double junction, polymeric gel.
Electrode: Platinum disk
Temperature: 0/100 °C
Pressure: 10 bar
Body: in PVDF, DL connector, 3/4" NPT thread
Length: 140 mm (45 mm in immersion)
Cable: SZ 947, L=8 m (not included)

3/12/18

Epoxy O.R.P. electrodes

SZ 240
Gold/Reference combination electrode. Sealed Gel, epoxy body, S7 connector.
Applications: clean water, portable instruments, laboratory.

SZ 250
Platinum/Reference combination electrode. Sealed Gel, epoxy body, S7 connector.
Applications: clean water, portable instruments, laboratory.

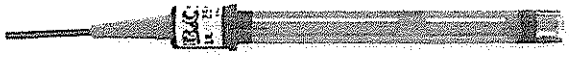

SZ 245
Gold/Reference combination electrode. Sealed Gel, epoxy body, cable 9 m.
Applications: clean water, swimming pools, industrial instruments. In-line up to 7 bar.

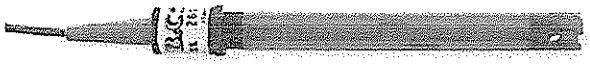

SZ 2011
Platinum wire/Reference combination electrode. Sealed Gel, epoxy body, cable 1.5 m with BNC connector.
O.E.M. low cost version. (10 pcs. minimum order).
Applications: Swimming pools, portable and industrial instruments. In-line up to 7 bar.

SZ 2055
Platinum/Reference combination electrode. Sealed Gel, epoxy body, double junction, cable 9 m.
Applications: liquid with HF contents, high temperature, industrial instruments. In-line up to 10 bar.

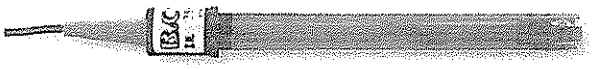

SZ 251
Platinum/Reference combination electrode. Sealed Gel, epoxy body, cable 1.5 m with BNC connector.
Applications: clean water, swimming pools, portable instruments, laboratory. In-line up to 7 bar.

SZ 255
Platinum/Reference combination electrode. Sealed Gel, epoxy body, cable 9 m.
Applications: clean water, swimming pools, industrial instruments. In-line up to 7 bar.

SZ 2035
ORP electrode Band-Platinum/Ref. combination, epoxy body, Gel sealed, cable 9 m. Low cost (10 pcs minimum order).
Applications: clean water, industrial instruments. In-line up to 7 bar.

Glass O.R.P. electrodes

SZ 265
Gold/Reference combination electrode. Sealed Gel, glass body, cable 9 m.
Applications: cyanide treatment, industrial instruments. In-line up to 10 bar.

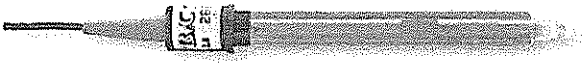

SZ 275
Platinum/Reference combination electrode. Sealed Gel, glass body, cable 9 m.
Applications: general purpose, chromate treatment, swimming pools, industrial instruments. In-line up to 10 bar.

Technical Specifications

Type	Metal	Temperature °C	Length mm	Diameter	Reference
SZ 240	Gold	0 / 60	110	12	Ag/AgCl
SZ 245	Gold	0 / 60	110	12	Ag/AgCl
SZ 250	Platinum	0 / 60	110	12	Ag/AgCl
SZ 251	Platinum	0 / 60	110	12	Ag/AgCl
SZ 255	Platinum	0 / 60	110	12	Ag/AgCl
SZ 2035	Platinum	0 / 60	110	12	Ag/AgCl
SZ 265	Gold	-5 / 110	110	12	Ag/AgCl
SZ 275	Platinum	-5 / 110	110	12	Ag/AgCl
SZ 2011	Platinum	0 / 60	110	12	Ag/AgCl
SZ 2055	Platinum	-5 / 130	110	12	Ag/AgCl + KNO3

3/12/18

Cables and connectors

SZ 9211
Coax cable 2.5 mm L = 8 m

SZ 9215
Coax cable 2.5 mm L = 100 m

SZ 926
Shielded cable 7x0.25 mm Diameter 6.4 mm

SZ 933
BNC connector

SZ 935
S7 connector

SZ 945
S7 connector + 8 m coax cable

SZ 947
DL connector + 8 m coax cable

SZ 9471
DL connector + 2 m coax cable with BNC

Standard solutions

SZ 952
Buffer solution 4.01 pH 250 cc.

SZ 954
Buffer solution 7.00 pH 250 cc.

SZ 956
Buffer solution 9.21 pH 250 cc.

SZ 961
ORP standard solution 220 mV 250 cc.

THE INTERNATIONAL CERTIFICATION NETWORK

CERTIFICATE

CISQ/IMQ-CSQ

B & C ELECTRONICS SRL

VIA PER VILLANOVA 3 - 20040 CARNATE (MI)

for the following field of activities

has implemented and maintains a

Quality Management System

which fulfils the requirements of the following standard

ISO 9001:2008

Issued on: 2009 - 10 - 30

Registration Number

IT - 1309

3/12/18

E. Conductivity controller

Applications

- deionized water
- drinking water
- food industry
- surface treatment

Selectable input from:

- 2 electrodes
- 4 electrodes pre-amplified cell
- electrodeless pre-amplified cell

Scales: from 0.2 mS to 40 Siemens
Autoranging
Conversion in % - gr/l - Bè
Temperature readout
Dual filter software

Calibration parameters display
Dual set-point and alarm conditions display
Automatic or manual temperature compensation
Automatic or manual acquisition of the temperature compensation table

Isolated output:

- 0/20 mA or 4/20 mA selectable
- programmable input on the span

Automatic or manual operation
Dual Set-point with hysteresis, delay, and min/max programmable functions

Alarm:

- continuous/flashing
- min/max and delay programmable
- on Set-points timing

Automatic overload protection and reset
Extractable terminal block
96x96 (1/4 DIN) housing

Accessories

The controller can be used with all B&C Electronics conductivity cells, including the 4-electrodes and toroidal amplified probes

Input from 2-electrode cells

K cm⁻¹	0,1	0,2	0,5	1,0	2,0	5,0	10,0
Range	0,2000µS	0,4000µS	1,000µS	2,000µS	4,000µS	10,00µS	20,00µS
	2,000µS	4,000µS	10,00µS	20,00µS	40,00µS	100,0µS	200,0µS
	20,00µS	40,00µS	100,0µS	200,0µS	400,0µS	1000µS	2000µS
	200,0µS	400,0µS	1000µS	2000µS	4000µS	10,00mS	20,00mS
	2000µS	4000µS	10,00mS	20,00mS	40,00mS	100,0mS	200,0mS

Input from microtransmitters 080310 connected to 4-electrode cells or input from microtransmitters 080315 connected to electrodeless cells

K cm⁻¹	0,1	0,2	0,5	1,0	2,0	5,0	10,0
Range	0,2000mS	0,4000mS	1,000mS	2,000mS	4,000mS	10,00mS	20,00mS
	2,000mS	4,000mS	10,00mS	20,00mS	40,00mS	100,0mS	200,0mS
	20,00mS	40,00mS	100,0mS	200,0mS	400,0mS	1000mS	2000mS
	200,0mS	400,0mS	1000mS	2000mS	4000mS	10,00S	20,00S
	2000mS	4000mS	10,00S	20,00S	40,00S	100,0S	200,0S

Technical Specifications

in addition to those common in the series 7685

Scales (See tables Scales vs. K)
* Autoranging: on/off
* Indirect scale: on/off
Zero adjustment: ±10 %
Sens. adjustment: 60/160 %
* Software filter 90%RT: 0.4/20.0 s for small/large variations

Temperature
Measuring and compensation range: -10.0/+110.0 °C
Resolution: +/- 0.1 °C
Zero adjustment: +/- 1 °C
Manual Temp. comp: -10.0/+110.0 °C

Options
091.3713 dual analog programmable and isolated output. The operator may select an output for Temperature.
091.4143 9/36 VDC power supply

3/12/18

7685 Series microprocessor-based

General information

The **7685 Series** ncludes all of the most complete and most performing analyzers of B&C Electronics.
They include all of the following measures:

- **pH - ORP**
- **Conductivity - Resistivity**
- **Free residual chlorine, combined and total**
- **Residual chlorine dioxide**
- **Residual dissolved ozone**
- **Dissolved oxygen**
- **Turbidity and Suspended Solids**
- **Residual dissolved Sulfide/Sulfite**
- **ISE**

All controllers are manufactured in robust aluminum enclosures DIN 43700, with front panels in polycarbonate.
Their reliability and precision, along with their functionality, make them easy to use in all applications. Finally, 7685 Series guarantees one of the best performance-price ratio in the marketplace.

Common features

Selectable input
Input from RTD Pt100 3 wires
Temperature readout
Dual filter software
Operating mode: automatic and manual
Calibration parameters display
Set-point and alarm conditions display
Automatic or manual temperature compensation
0/20 mA or 4/20 mA programmable isolated output
Dual set-point with hysteresis, delay and min/max programmable functions
Min/max and set-points timing alarm relay
Software: 3 access levels, user friendly, keyboard lock,watch-dog
EEPROM parameters storage
Automatic overload protection and reset
Extractable terminal blocks
96X96 (1/4" DIN) housing

Fieldbus Communication

The system is based on a digital communication through an open Modbus protocol, which interacts with the following Fieldbus:
Profibus DP, Profinet, Modbus-TCP, DeviceNet, CANopen, EtherNet /IP/Modbus-TCP
Customers can view the main data and functions, such us:

- Primary and secondary measuring values
- Error messages
- Set-points relay, alarm relay and autoclean relay status

The "Virtual Instrument" is an innovative solution through which Customers can perform, from a remote station, all specific operations.
Custom versions with bidirectional communication of data are available for O.E.M. and system integrators.

Technical Specifications

common to all instruments of the 7685 Series

Temperature
Input: RTD Pt100 2/3 wires

Set point A and B:
Operation: ON/OFF
Hysteresis: adjustable
Delay: 0.0/99.9 s
* Function: Max/Min
Relay contacts: SPDT 220V 5 A (resistive load)

Alarm:
Low/High: adjustable
Delay: 0.0/99.9 s
* Relay status: activated/deactivated
* Alarm on max. operating time of set-point A/B: ON/OFF
* Max operating time of set-point A/B: 0/60 minutes
* Relay contacts: SPDT 220V 5 A (resistive load)

Analog output N° 1
* Input corresponding to the analog output (option 091.371x): selectable
* Output range: 0-20/4-20 mA (it can be made to represent any segment of the measuring scale
Response time: 2.5 s for 98%
Isolation: 250Vac
Load: 600 ohm max

Analog outpunt N° 2 (option 091.371x)
* Input corresponding to the analog output: selectable
* Output range: 0-20/4-20 mA (it can be made to represent any segment of the measuring scale
Response time: 2.5 s for 98%
Isolation: 250Vac
Load: 600 ohm max

Configuration (*)
The above parameters indicated by asterisks "*", may be selected in the Configuration menu

General Specification
Alphanumeric display: 1 line x 16 characters
Operating temperature: 0/50 °C
Humidity: 95% without condensation
Power supply: 110/220Vac ± 10% 50/60 Hz
Isolation: 4 kV between primary and secondary (IEC 348)
Power: 5VA max.
Terminal block: extractable
Weight: 850 g
Dimensions: 96 x 96 x 155 mm

Options

091.701	RS 232 isolated output The output sends the data to the serial port of the computer.
091.404	24Vac power supply
091.414X	9/36VDC power supply

The technical specifications could be changed without notice

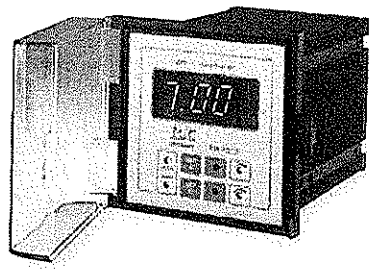

SZ 7601

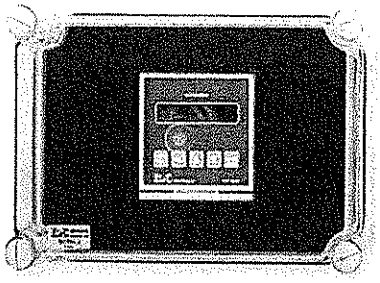

BC 931.2

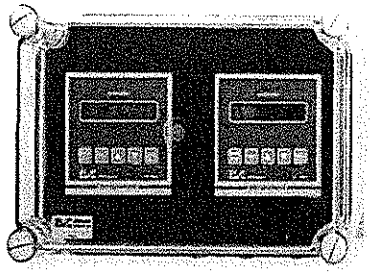

BC 931.3

Series 7685, 7635, 7335 and 7615

SZ 7601
Transparent splashproof front door for 7685, 7635 and 7615
Protection: IP 54

BC 931.2
Watertight enclosure with transparent front door suitable for the installation of one 7685, 7635 or 7615 unit.
Protection: IP 65 (NEMA 4X)
Size: 270x180x238 mm

BC 931.3
Watertight enclosure with transparent front door suitable for the installation of two 7685, 7635 or 7615 units.
Protection: IP 65 (NEMA 4X)
Size: 270x180x238 mm

BC 9616.2
Watertight enclosure with transparent front door suitable for the installation of one 7685 or 7615 unit. Low cost.
Protection: IP 65 (NEMA 4X)
Size: 200x200x187 mm
Dimensioni: 200x200x187 mm.

BC 9611.2
Watertight enclosure with transparent front door suitable for the installation of one 7635 unit. Low cost.
Protection: IP 65 (NEMA 4X)
Size: 200x200x132 mm

BC 9611.4
Watertight enclosure with transparent front door suitable for the installation of one or two 7335 units. Low cost.
Protection: IP 65 (NEMA 4X)
Size: 200x200x132 mm

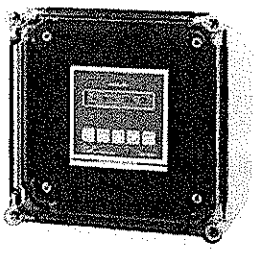

BC 9616.2

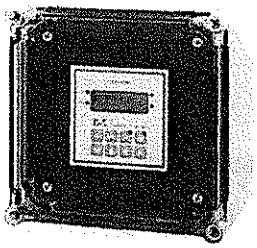

BC 9611.2

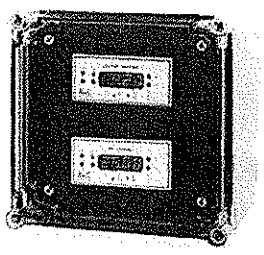

BC 9611.4

3/12/18

Two electrodes

SI 301
In-line E.Conductivity probe.
Applications: from 0 to 2 mS
Cell constant: K=1 cm^{-1}
Body: PVC
2 Electrodes: 316 S.Steel
Thread: 1"BSP
Operating temperature: 40 °C max.
Operating pressure: 3 bar max. at 25 °C
Option: non standard materials and cell constant.

SI 3013
In-line E.Conductivity probe
Applications: from 0 to 2 mS
Cell constant: K=1 cm^{-1}
Body: Polypropilene
2 Electrodes: 316 S.Steel
Thread: 1"BSP
Operating temperature: 50 °C max.
Operating pressure: 3 bar max. at 25 °C
Option: non standard materials and cell constant.

SI 308T
In-line E.Conductivity probe + Pt100
Applications: for high purity water.
Cell constant: K=0.01 cm^{-1}
Body: PVC
Electrodes: 316 S.Steel
Temperature sensor: Pt100
Thread: 1"BSP
Operating temperature: 50 °C max.
Operating pressure: 3 bar max. at 25 °C
Cable: 3 mt

SZ 3252
Three black Platinum band electrodes, K=1 cm^{-1}, epoxy body, cable 1.5 m with BNC connector.
Applications: portable instruments, laboratory.

SZ 3271
Two graphite electrodes, K=1 cm^{-1}, epoxy body L=110 mm D=12 mm, cable 1.5 m with BNC connector.
Applications: in-line up to 10 bar and 80 °C, range 0/80 mS.

SZ 3273.1
Two graphite electrodes, K=1 cm^{-1}, built-in Pt100, epoxy body L=110 mm D=12 mm, cable 3 m.
Applications: in-line up to 10 bar and 80 °C, range 0/80 mS.

SZ 3273.4
Two graphite electrodes, K=1 cm^{-1}, built-in NTC 10K, epoxy body L=110 mm D=12 mm, cable 3 m.
Applications: in-line up to 10 bar and 80 °C, range 0/80 mS.

3/12/10

Special two electrodes

SZ 3320.1 - SZ 3330.1
For high Temperature/Pressure.
Applications: High purity water.
Cell constant SZ 3320.1: K = 0.1 cm^{-1}
Cell constant SZ 3330.1: K = 1 cm^{-1}
Thermocompensator: Pt100
Material in contact with liquids: S. Steel, PEEK L=55 mm
Temperature: 100 °C max.
Pressure: 16 bar max. at 25 °C
Connector: 4-pin
Thread: 3/4" NPT
Cable: SZ927.1 (to be ordered separately)

SZ 3300.1
Graphite Electrodes.
Applications: From 200 µS to 200 mS.
Cell constant: K = 1 cm^{-1}
Thermocompensator: Pt100
Material in contact with liquids: PES-graphite L=55 mm
Temperature: 100 °C max. at 10 bar
Pressure: 16 bar at 25 °C
Connector: 4-pin
Thread: 3/4" NPT
Cable: SZ927.1 (to be ordered separately)

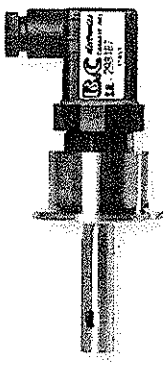

SZ 3350.1 - SZ 3360.1
For high Temperature/Pressure.
Applications: High purity water.
Cell constant SZ 3350.1: K = 0.1 cm^{-1}
Cell constant SZ 3360.1: K = 1 cm^{-1}
Thermocompensator: Pt100
Material in contact with liquids: S. Steel, PEEK L=55 mm
Temperature: 100 °C max.
Pressure: 6 bar max. at 25 °C
Connector: 4-pin
Thread: Tri-Clamp 2"
Cable: SZ927.1 (to be ordered separately)

3/12/18

STV/C

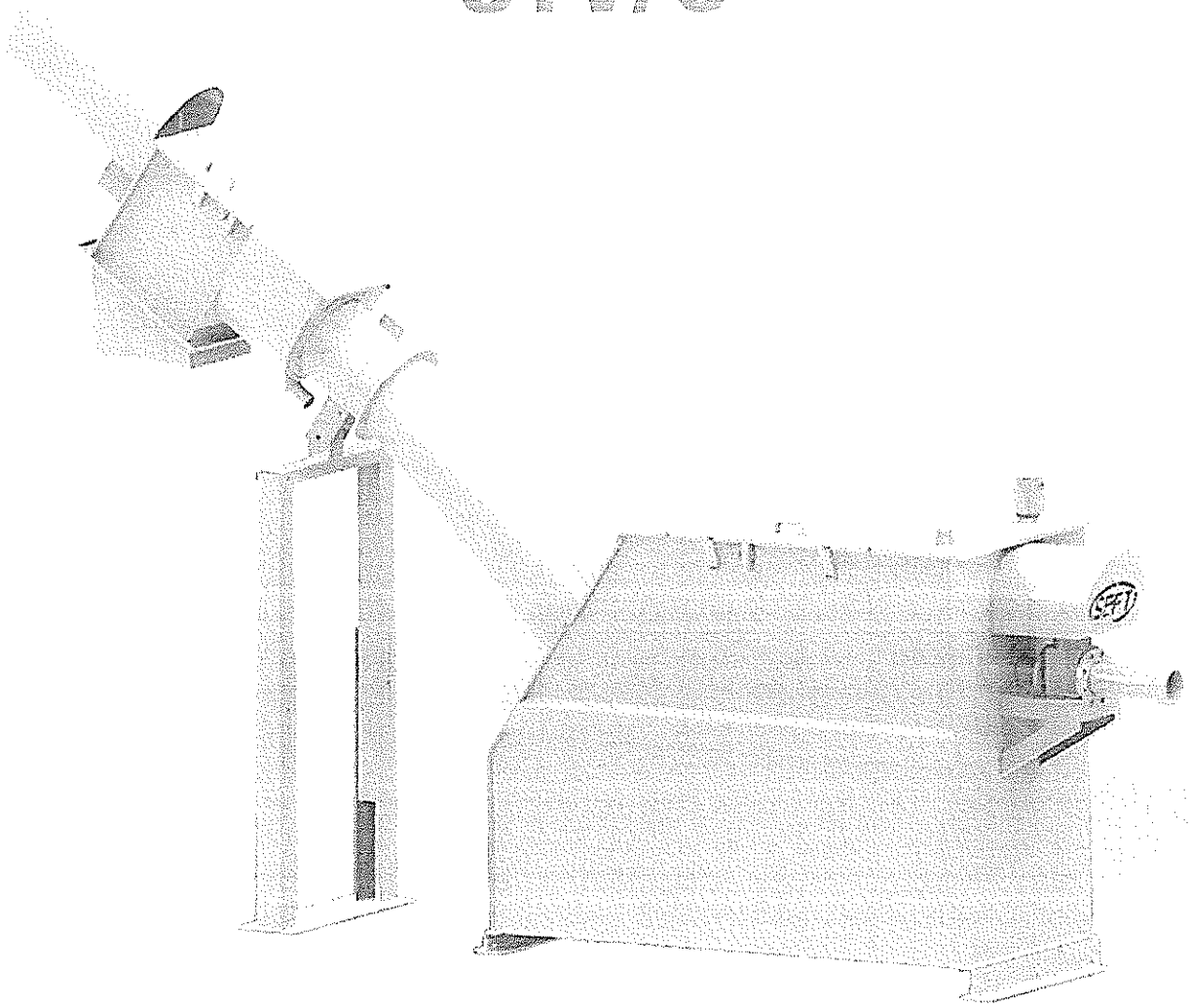

IMPIANTO COMPATTO DI RICEZIONE E TRATTAMENTO BOTTINI

COMPACT PLANT FOR CESSPOOL ACCEPTANCE

3/12/18

STV/C

STV/C - IMPIANTO COMPATTO DI RICEZIONE E TRATTAMENTO BOTTINI

L'STV/C è un'unità compatta in grado di effettuare il pretrattamento di grigliatura delle acque reflue derivanti da processi industriali di vario tipo.
Prima che queste vengano immesse negli impianti di depurazione.
L'ingresso è dotato di un attacco rapido tipo "perrot" con valvola elettromeccanica; i reflui, scaricati direttamente dall'autobotte, vengono filtrati da una filtrococlea che rimuove le sostanze solide che poi vengono drenate e compattate e quindi scaricate in un cassone oppure insaccate.

FUNZIONI
- Filtrazione
- Drenaggio/compattazione del solido rimosso

VANTAGGI
- Assenza di odori
- Assenza di occlusioni
- Bassi costi di gestione e manutenzione
- Macchina compatta
- Lavori edili non necessari
- Basso contenuto residuo di materia organica
- Riduzione fino al 40% in volume del solido asportato
- Assenza di pompe

CARATTERISTICHE COSTRUTTIVE

Portata in ingresso	Fino a 100 m³/h
Foratura vaglio	ø 3 ÷ ø 7 mm foro tondo

STV/C - COMPACT PLANT FOR CESSPOOL ACCEPTANCE

STV / C is a unit compact able to carry out the pretreatment of screening of waste water from industrial processes of various types. Before they are released in wastewater treatment plants.
The entrance is equipped with a quick attack (Perrot type) and an electromechanical valve.
The wastewater discharged directly from the tanker, is filtered by a screw screen that removes the solids that are then drained and compacted and then discharged into a bin or bagged.

FEATURES
- *Filtration*
- *Drainage / compaction of the solid removed*

ADVANTAGES
- *No odor*
- *No obstructions*
- *Low operating costs and maintenance*
- *Compact machine*
- *Construction work is not necessary*
- *Low residual content of organic matter*
- *Reduction of up to 40% by volume of the solid removed*
- *No pumps*

MANUFACTURING FEATURES

Inlet flow rate	up to 100 m³/h
Filtering options	ø 3 ÷ ø 7 mm foro holes

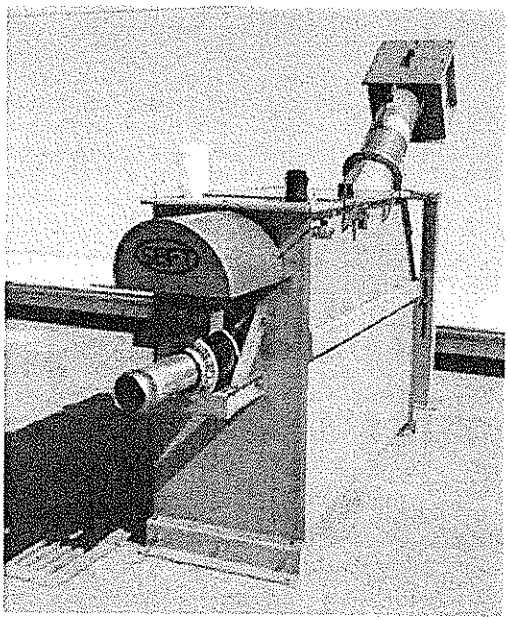

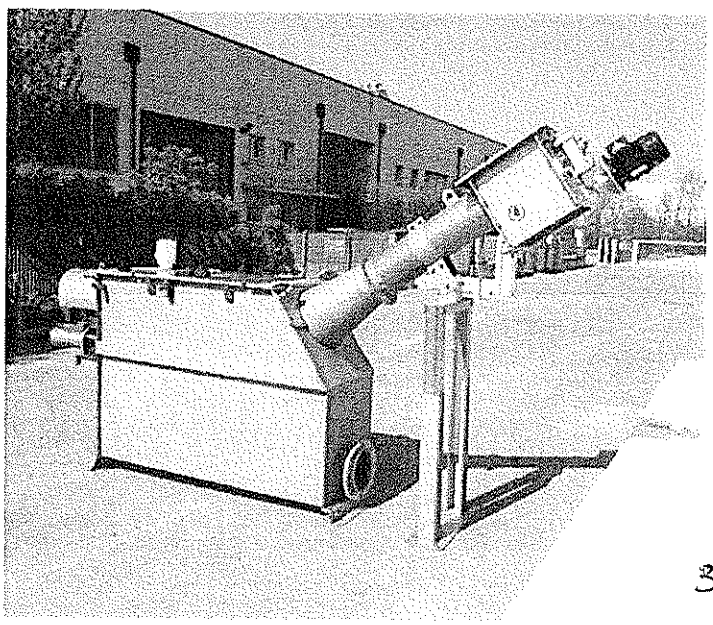

3/12/18

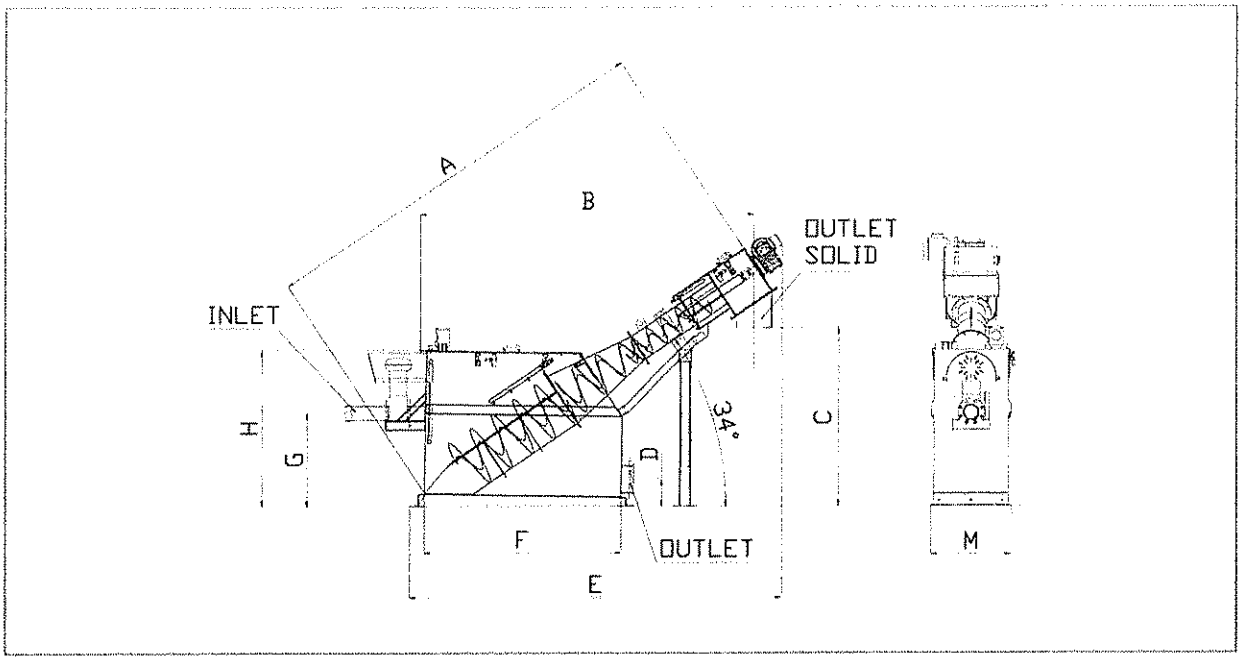

DETTAGLI TECNICI *TECHNICAL DETAILS*

Model	SCREEN	kW SCREEN	kW VALVE	m³/h FLOWRATE	INLET	OUTLET
STV/C 50	FCP 50	1,10	0,18	50	DN 100	DN 200
STV/C 75	FCP 60	0,75	0,18	75	DN 100	DN 200
STV/C 100	FCP 70	0,75	0,18	100	DN 100	DN 200

le motorizzazioni possono variare in base alla configurazione di macchina
based on machine configuration, motor power could be different

i dati in tabella sono teorici
data here listed are theoretical

Model	A mm	B mm	C mm	D mm	E mm	F mm	G mm	H mm	ØI mm	ØL mm	M mm	Weight Kg
STV/C 50	3550	2800	1500	220	3050	1600	758	1280	219	273	680	630
STV/C 75	4000	3290	1750	220	3750	1750	957	1440	323	323	810	780
STV/C 100	4510	3650	1950	220	4050	2000	1140	1600	323	323	856	940

3/12/18

STV/C

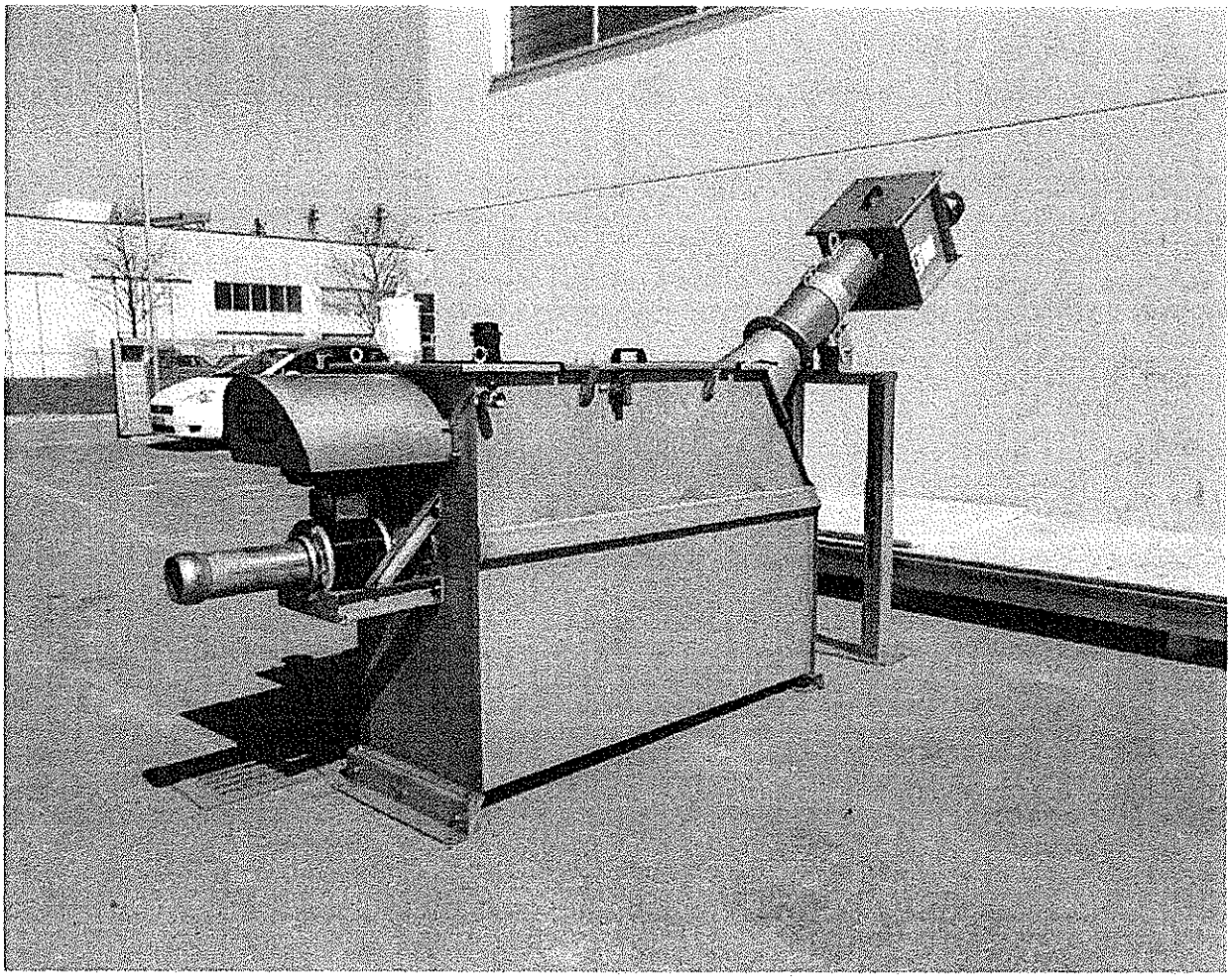

SEFT S.r.l.
Via Aperte, 195 - 41038 San Felice sul Panaro (MO) - Italy
tel. +39 0535 84544 - fax +39 0535 85585
e-mail: seft@seft.it PEC: seftsrl@legalmail.it
www.seft.it

3/12/18

I dati riportati nel presente catalogo non sono impegnativi e possono subire variazioni in qualsiasi momento. *Rights reserved to modify technical specifications.*

STV/C 50 Compact Screening System for Cesspool Acceptance

Inlet Flow : 50 - 60 m3/h.

Screenings weight and volume reduction: up to 40% - 50%

External structure in stainless steel AISI304L
Tank in stainless steel AISI304L
Shaft less spirals in high carbon steel painted RAL 6029
Bolts in A2
Anti-wear material: bolted plates in stainless steel AISI304L

Loading basket diameter: **Ø456 mm**
Screw diameter for transport / compaction: Ø219 mm
Filtration type: rounded holes
Dimension: **Ø 10 mm**
Total length: 3.590 mm (motor excluded)
Discharging height: 1.500 mm from ground level
Inclination: 35°
Rectangular outlet spout for screening discharge 325 x 285 mm
Basket cleaning through nylon bolted brushes
Inlet: alum. DN100 Perrot w/motorized valve (24V)
Outlet: alum. DN200 PN10

Screw:
Motor 1,1 kW, 400V, 50Hz, 3 phases, 4 poles, IP55, F class, 11 rpm, BONFIGLIOLI gear reducer
Valve:
Electric actuator 24V, 50Hz, IP65, I class

Included:
Washing system on compaction zone with manual valve
Washing system on loading zone with manual valve
Washing system on cesspool inlet zone with manual valve
PE breathing valve on screw screen tank
PE pipe for returning liquid of compaction zone
predisposition for rod level sensor
limit-switches for opening hatches
Telescopic support foot in stainless steel AISI 304L
Eyebolts

3/12/18

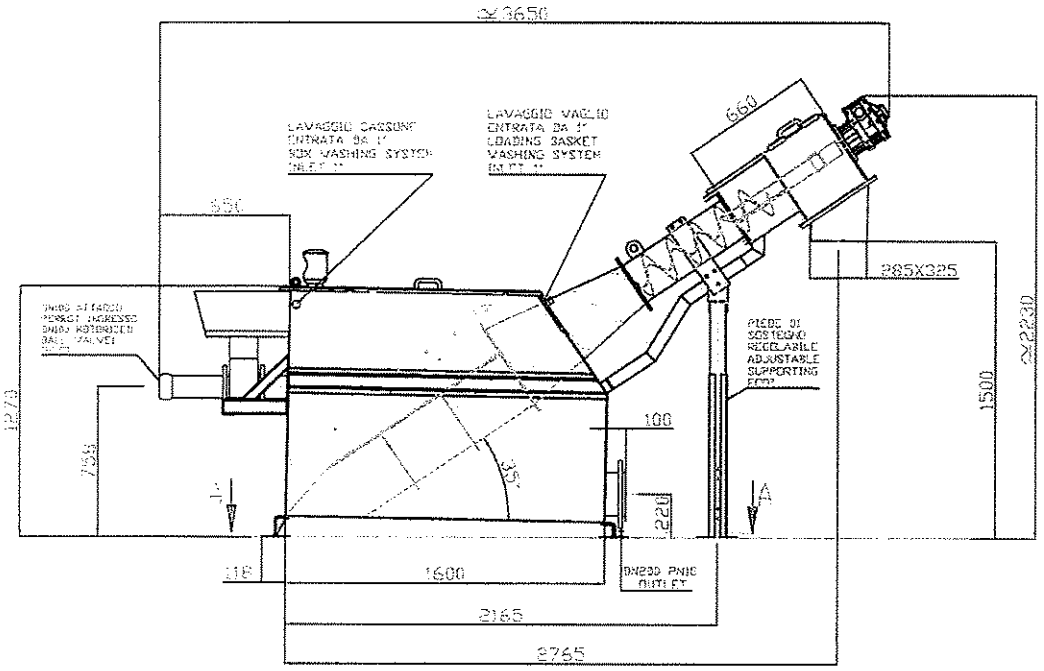

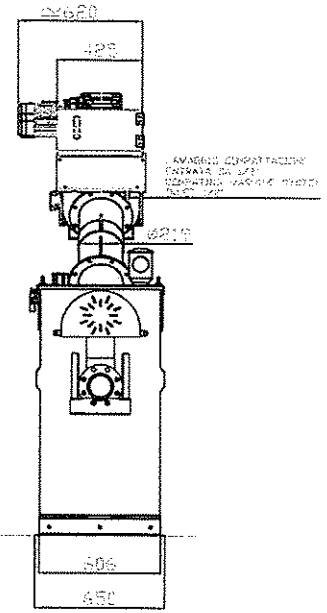

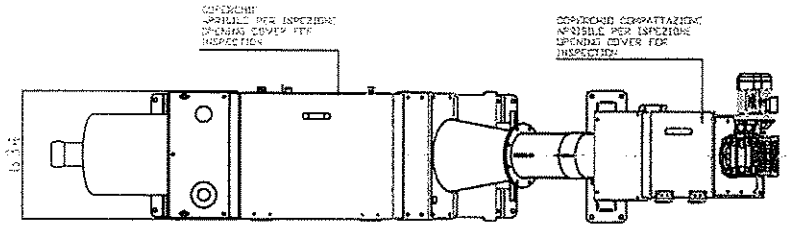

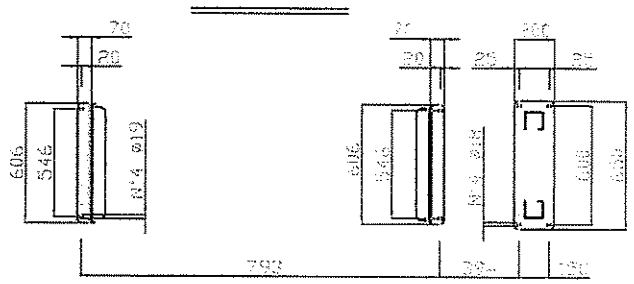

	Grado di Finitura Superficiale: √( )( )	Materiale: VEDERE OFFERTA SEE OFFER		Codice Pezzo: STVC50	
				Trattamento:	Codice Progetto:
Scala: 1:1	Foglio:	Durezza:	Peso: Kg.	Colore :	Disegnato da: GUIDO / Data: 04-12-2014
Quote senza indicazione di tolleranza grado di precisione medio secondo UNI EN 22768 fori tolleranza+ /alberi tolleranza-		DENOMINAZIONE: STVC50 INCL.35° IMPIANTO COMPATTO DI RICEZIONE E TRATTAMENTO COMPACT PLANT FOR CESSPOOL ACCEPTANCE			Modificato da: / Data:
SEFT via Aperte,195 41038 S.F. sul Panaro (Mo) www.seft.it seft@seft.it					Codice disegno: STVC50
		Questo disegno non puo'essere trasmesso a terzi senza autorizzazione di SEFT srl			

Disegno indicativo ai fini commerciali che può essere soggetto a variazioni
Drawing draft for commercial purposes may be subject to change without prior notification

3/12/18

CERTIFICATE

Management system as per
EN ISO 9001 : 2008

In accordance with TÜV NORD CERT procedures, it is hereby certified that

SEFT S.r.l.
Via Aperte, 195
41038 San Felice Sul Panaro (MO)
Italy

applies a management system in line with the above standard for the following scope

Design, manufacture and sale of machinery for civil and industrial purification and customised equipments for industrial plants.

Certificate Registration No. 44 100 134722
Audit Report No. IT-14670/2016

Valid from 2016-06-05
Valid until 2018-09-14
Initial certification 2013

Certification Body
at TÜV NORD CERT GmbH

Bologna, 2016-05-27

This certification was conducted in accordance with the TÜV NORD CERT auditing and certification procedures and is subject to regular surveillance audits.

TÜV NORD CERT GmbH Langemarckstraße 20 45141 Essen www.tuev-nord-cert.com

DAkkS
Deutsche
Akkreditierungsstelle
D-ZM-12007-01-01

3/12/18

Mixer data sheet

WILO SE, Werk Hof
Heimgartenstraße 1-3
Postfach 3309 · D-95030 Hof/Saale
T: +49 9281 974-540 F: +49 9281 974-133
ctwwt@wilo.com www.wilo.com

ID	17-ORH-GR-AB-1-0001
Project country	Greece
Project name	WWTP MONDENEGRO
Position	1 Anoxic tank
Date	2017-09-05
Enquiry	

Data for selection

Mixed liquid

Kind	Activated sludge	
Density	1000	kg/m³
pH value	7	
Temperature	20	°C
Dry solids content	0,5	%
Flow behaviour	Newton flow	
Kind of thickening	None	
Additional thickener	No	

Solids

Origin	Not determined	
Kind	Not determined	
Solid size	Not determined	

Mixing task

Operating mode	Continuous	
Mixing task	Suspend	
Average calculated flow velocity[1]	0,3	m/s

Tank

Material	Concrete	
Outlet	On bottom, laterally at the tank edge	
Tank shape	Rectangular tank	
Tank volume	34,8	m³
Vertical / inclined walls	Tank with vertical walls	
Length on upper edge	4	m
Width on upper edge	3	m
Tank height	2,9	m
Maximum filling level	2,9	m
Minimum filling level	2,9	m
Relevant filling level	2,9	m

Preparation

Preparation	Screen with gap width < 10 mm, but no pre-clarification

3/12/18

WILO SE, Werk Hof
Heimgartenstraße 1-3
Postfach 3309 - D-95030 Hof/Saale
T: +49 9281 974-540 F: +49 9281 974-133
ctwwt@wilo.com www.wilo.com

ID	17-ORH-GR-AB-1-0001
Project country	Greece
Project name	WWTP MONDENEGRO
Position	1 Anoxic tank
Date	2017-09-05
Enquiry	

Aeration

Kind	Without

Tank particularities

Default

Remarks regarding the selection process

The mixing result depends on the functional quality of the plant equipment in the mechanical treatment stage (preliminary treatment). Mineral fractions (grit and sand) must be always excluded from the process and cannot be kept in suspension. It is absolutely required to check the values mentioned above with the actual values on site.

3/12/18

WILO SE, Werk Hof
Heimgartenstraße 1-3
Postfach 3309 - D-95030 Hof/Saale
T: +49 9281 974-540 F: +49 9281 974-133
ctwwt@wilo.com www.wilo.com

ID	17-ORH-GR-AB-1-0001
Project country	Greece
Project name	WWTP MONDENEGRO
Position	1 Anoxic tank
Date	2017-09-05
Enquiry	

Selection of submersible mixers

Proposal

Type	TR 21.145-4/11 S14	
Quantity	1	
Frequency	50	Hz
Rated power	1,3	kW
Propeller speed	1390	1/min
Power factor (ISO 21630)	200	N/kW
Propeller diameter	0,21	m
Maximum power input	1,74	kW
Power input in duty point	[*1] 1,2	kW
System-dependent power input	[*2] 1,2	kW
Power density	[*3] 34,5	W/m³
System-dependent power density	[*4] 34,5	W/m³
Distance to water surface	0,2	m

[*1] Measurement at static thrust acc. to ISO 21630 (inflow velocity ~0, Open Sea conditions).
[*2] The power consumption of the mixer will be reduced in proportion to the flow velocity which is generated in the tank.
[*3] According to ISO 21630.
[*4] According to site conditions.

Important note

Installation of the mixer(s) according to installation sketch. Before installing the mixers, the up-to-date tank plans must be submitted without previous request to WILO SE, Hof for revision.

To guarantee a continuous operation, the minimum water cover above the propeller specified by WILO must be ensured.
Please check if our basic data are identical to your application and, if necessary, inform us in writing about modifications/objections.
The aforementioned mixer(s) selection data are integral part of our warranty, whereas our warranty comes only into effect, when the submersible mixers are installed according to our recommendation. Because the overall function depends considerably on the correct positioning of the submersible mixers, we will not accept any warranty claims which result from positioning which we did not approve explicitly. Also zones of weak flow due to the tank geometry are not part of our warranty. The values of maximum power input, power input in the duty point and energy density are valid for clean water. Furthermore the use of our submersible mixers in patented procedures or under trade mark rights of third parties is excluded from our liability.

[1]In case of rectangular or round tanks the average flow velocity above the tank section cannot be guaranteed.
For the selected tank shape no directed circulating flow can be generated for physical reasons. The calculated average flow velocity refers only to an undirected turbulent flow.

All attached notes relating to the product and the selection are part of the technical selection of WILO SE.

3/12/18

Installation proposal

WILO SE, Werk Hof
Heimgartenstraße 1-3
Postfach 3309 - D-95030 Hof/Saale
T: +49 9281 974-540 F: +49 9281 974-133
ctwwt@wilo.com www.wilo.com

ID	17-ORH-GR-AB-1-0001
Project country	Greece
Project name	WWTP MONDENEGRO
Position	1 Anoxic tank
Date	2017-09-05
Mixer	TR 21.145-4/11 S14
Enquiry	

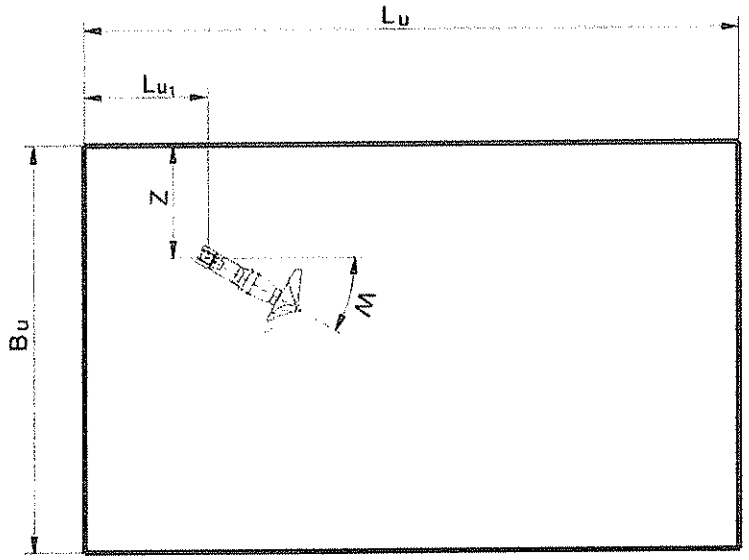

Installation recommendation regarding to miscellaneous minimum distances

n *	1	
Bu	3	m
Z	0,4	m
Nl *	1	

Lu	4	m
Lu1	1	m
W	30	°

* n = no. of mixer per tank, Nl = no. of installation positions per tank

3/12/18

WILO SE, Werk Hof
Heimgartenstraße 1-3
Postfach 3309 · D-95030 Hof/Saale
T: +49 9281 974-540 F: +49 9281 974-133
ctwwt@wilo.com www.wilo.com

ID	17-ORH-GR-AB-1-0001
Project country	Greece
Project name	WWTP MONDENEGRO
Position	1 Anoxic tank
Date	2017-09-05
Mixer	TR 21.145-4/11 S14
Enquiry	

Hints

The enclosed installation proposal is a schematic drawing and not according to scale. It serves as orientation guide. In case of order, the feasibility of this installation has to be matched with the tank drawing and the actual conditions. If there is an inflow and/or outflow in the immediate vicinity of the mixer, the mixer position must be checked based on updated tank plans to avoid bad influences on the mixer and short-circuit flows.

3/12/18

Abmessungen für Tauchmotorrührwerk
MINIPROP TR 21

Dimensions of Submersible mixer **MINIPROP TR 21**

Dimensions du circulateur immergé **MINIPROP TR 21**

wilo
Heimgartenstraße 1-3 D-95030 Hof/Saale
Telefon +49 9281 974-0 Fax +49 9281 96528
www.wilo.com E-Mail: info@wilo.com

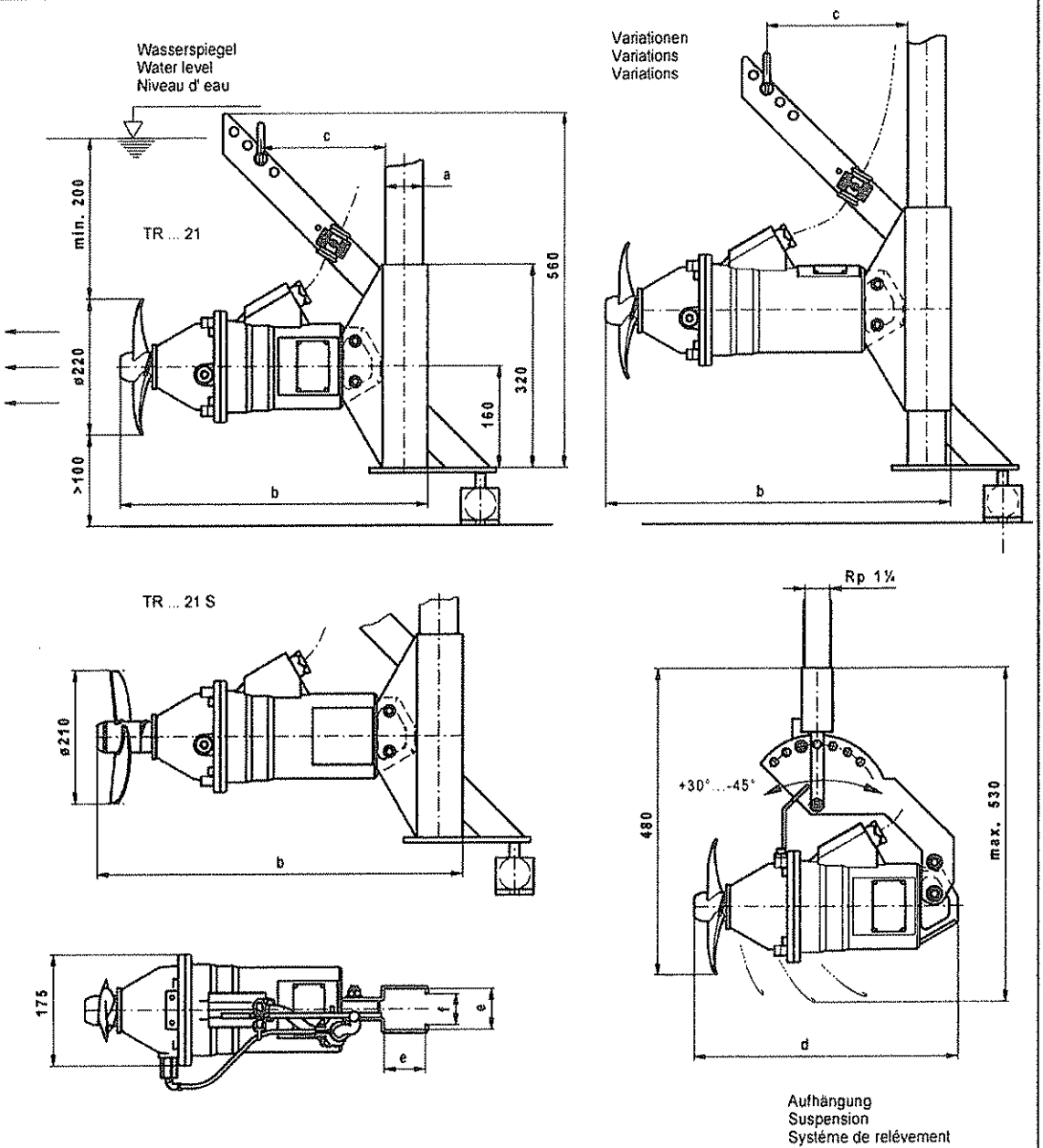

Aufhängung
Suspension
Système de relévement

Motor / Motor type/ Type de moteur	T12G-4/6			T12G-4/11		
Gestänge-Gr./ Size of pipes / Dimension du tube	a = 60x60	a = 50x50	Suspension	a = 60x60	a = 50x50	Suspension
b	490/525*	480/515*		545/580*	535/570*	
c	200	200		220	220	
d			415/450*			470/505*
e	64	54		64	54	
f	40	32		40	32	
Gewicht / Weight / Poids	max. 32kg/35kg*			max. 37kg/40kg*		

* mit Stahlpropeller
with steel propeller
avec hélice en acier

Maßstab: 1:10 Technische Änderungen vorbehalten - Technical changes reserved - Modifications techniques réservées

Datum: 02.06.14 NP

Mb015.prt

3/12/18

CERTIFICATE

This is to certify that

WILO SE

Nortkirchenstraße 100
44263 Dortmund
Germany

with the organizational units/sites as listed in the annex

has implemented and maintains a **Quality Management System**.

Scope:
Development, manufacture, sales and service of pumps and pump systems for Building Services, Water Management and Industry.

Through an audit, documented in a report, it was verified that the management system fulfills the requirements of the following standard:

ISO 9001 : 2008

Certificate registration no.	060313 QM08
Date of revision	2016-04-24
Valid from	2015-04-30
Valid until	2018-04-29
Date of certification	2015-04-30

DAkkS
Deutsche
Akkreditierungsstelle
D-ZM-16074-01-00

DQS GmbH

G. Blechschmidt

Götz Blechschmidt
Managing Director

3/12/18

Accredited Body: DQS GmbH, August-Schanz-Straße 21, 60433 Frankfurt am Main

Annex to Certificate
Registration No. 060313 QM08

WILO SE

Nortkirchenstraße 100
44263 Dortmund
Germany

Location	Scope
522452 **WILO SE** **Felicitasstraße 5** **44263 Dortmund** **Germany**	Development, manufacture, sales and service of pumps and pump systems for Building Services, Water Management and Industry.
522453 **WILO SE** **Strümpenbusch 3** **44357 Dortmund** **Germany**	Development, manufacture, sales and service of pumps and pump systems for Building Services, Water Management and Industry.
283115 **WILO SE** **Heimgartenstraße 1-3** **95030 Hof** **Germany**	Development, Manufacture, Sales and Service of: -pumps and electrical motors for water supply, lowering of water level and booster plants -pumps and electrical motors for sewage disposal and treatment -pumps and electrical motors for drainage of pits, sumps, building sites and so on -submersible mixers and electrical motors for flow generation or for mixing of liquids for communal or industrial applications -technical equipment for sewage treatment plants, digester gas plants, waterworks and pumping stations
070047 **WILO SE** **Anderslebener Straße 161** **39387 Oschersleben** **Germany**	Development and manufacture of pumps and pump systems for Building Services, Water Management and Industry.
521114 **WILO INTEC SAS** **50, avenue Eugene Casella** **18700 Aubigny-sur-Nère** **France**	Design, manufacturing and sales of circulators and hydraulic units for Heating Ventilation Air Conditioning industry.

This annex (edition: 2016-04-24) is only valid in connection with the above-mentioned certificate.

3/12/18

Annex to Certificate
Registration No. 060313 QM08

WILO SE

Nortkirchenstraße 100
44263 Dortmund
Germany

Location	Scope
527816 **WILO INTEC SAS organizačná zložka** **Slovakia** **Zlatovská 2193/33** **91105 Trenčin** **Slovakia**	Manufacturing of circulators for Heating Ventilation Air Conditioning industry.
520706 **Wilo Salmson France SAS** **80 boulevard de l'Industrie** **CS 90527** **53005 Laval Cedex** **France**	Development, manufacture, sales and service of pumps and pump systems for Building Services, Water Management an Industry.
522448 **Wilo Salmson France SAS** **ZA Autoroutière 1005 bd de la Communication** **53950 Louverné** **France**	Development, manufacture, sales and service of pumps and pump systems for Building Services, Water Management an Industry.
521111 **Wilo Salmson France SAS** **30, rue du 35e Regiment d'Aviation** **69673 Bron** **France**	Development, manufacture, sales and service of pumps and pump systems for Building Services, Water Management an Industry.
520707 **Wilo Salmson France SAS** **53, boulevard de la République Espace Lumière, Bât. 6** **78400 Chatou** **France**	Development, manufacture, sales and service of pumps and pump systems for Building Services, Water Management and Industry.

This annex (edition: 2016-04-24) is only valid in connection with the above-mentioned certificate.

Annex to Certificate
Registration No. 060313 QM08

WILO SE

Nortkirchenstraße 100
44263 Dortmund
Germany

Location	Scope
521112 **WILO Pumps Ltd.** **Unit B1 Corcanree Business Park** **Dock Road** **Limerick** **Ireland**	Manufacture of pumps for Building Services.
521113 **STEMMA S.R.L.** **via postale VECCHIA, 20** **36070 Trissino.VI** **Italy**	Manufacture of stainless steel components for pumps and Technical products.
520708 **WILO China Ltd.** **No. 10 Zhaofeng 2nd Street, Zhaofeng Industrial Zone,** **Zhaoquanying, Shunyi District,** **101300 Beijing** **China**	Manufacturing, Sales and After Sales Service of Pumps, Pump Systems and Pump Systems Piece Parts including Control Box for Building, Municipalities, Industry and Agriculture
522450 **WILO China Ltd.** **No.285 Qinhuang West Street,** **Qinhuangdao Economic & Technological Development Zone** **066004 Qinhuangdao, Hebei Province** **China**	Manufacturing, of Pumps for Building, Industry and Agriculture
521117 **WILO ELEC CO. LTD.** **No.285 Qinhuang West Street,** **Qinhuangdao Economic & Technological Development Zone** **066004 Qinhuangdao, Hebei Province** **China**	Research, Design and Production of AC Motors for Pumps

This annex (edition: 2016-04-24) is only valid in connection with the above-mentioned certificate.

3/12/18

Annex to Certificate
Registration No. 060313 QM08

WILO SE

Nortkirchenstraße 100
44263 Dortmund
Germany

Location	Scope
521118 **Wilo Mather and Platt Pumps Private Limited** **S. No. 162,** **Mumbai - Pune Road,** **Chinchwad** **Pune 411 019** **India**	Design, development, manufacture, installation and servicing of centrifugal pumps/pump sets and valves and contracts of pumping system on turnkey basis.
521120 **Wilo Mather and Platt Pumps Private Limited** **Sales** **Sales office, 201to 206,** **Premier Plaza,** **Mumbai - Pune Road,** **Chinchwad** **Pune 411 019** **India**	Design, development, manufacture, installation and servicing of centrifugal pumps/pump sets and valves and contracts of pumping system on turnkey basis.
521119 **Wilo Mather and Platt Pumps Private Limited** **E 25, MIDC,** **Gokul Shirgaon Industrial Area** **Kolhapur 416234** **India**	Design, development, manufacture, installation and servicing of centrifugal pumps/pump sets and valves and contracts of pumping system on turnkey basis.
521116 **WILO Pumps Limited** **46 Mieumsandan 1-ro** **Gangseo-gu** **Busan 618-220** **South Korea**	Design, development, manufacture, sales and service of pumps and pump systems

This annex (edition: 2016-04-24) is only valid in connection with the above-mentioned certificate.

3/12/18

Annex to Certificate
Registration No. 060313 QM08

WILO SE

Nortkirchenstraße 100
44263 Dortmund
Germany

Location	Scope
514915 **WILO Pompa Sistemleri A.Ş.** **Orhanli Mah.** **Mehmet Akif Ersoy Cad. No 91** **Tuzla** **34956 Istanbul** **Turkey**	Sales, Service of Pumps & Pump Systems and Development, Assembly of Pump Systems for Building Services, Water Management and Industry
501447 **WILO Pumpen Österreich GmbH** **WILO Straße 1** **2351 Wiener Neudorf** **Austria**	Sales and service of pumps and pump systems for Building Services, Water Management and Industry.
516442 **WILO nv** **Rusatiralaan 2** **1083 Ganshoren** **Belgium**	Sales and service of pumps and pump systems for Building Services, Water Management and Industry.
522451 **Wilo Polska Sp. z o.o.** **Jedności 5** **05-506 Lesznowola** **Poland**	Implementation to the market, sale and service of pumps, pump systems for heating, ventilation, air conditioning, water supply and sanitary engineering
518368 **WILO Nordic AB** **Isbjörnsvägen 6** **35245 Växjö** **Sweden**	Sales and service of pumps and pump systems for Building Services, Water Management and Industry.
525082 **WILO Magyarország Kft.** **Torbágy u. 14** **2045 Törökbálint** **Hungary**	Sales and service of pumps and pump systems for Building Services, Water Management and Industry.

This annex (edition: 2016-04-24) is only valid in connection with the above-mentioned certificate.

3/12/18

WILO HELLAS ABEE
ΑΓΙΟΥ ΑΘΑΝΑΣΙΟΥ 80
145 69 ΑΝΟΙΞΗ – ΑΤΤΙΚΗΣ
ΕΛΛΑΔΑ

Τ. +30 210 6248 0
F. +30 210 6248 360
wilo.info@wilo.gr
www.wilo.gr

wilo

REFERENCE LIST WITH SEWAGE PUMPS & MIXERS WILO

1	WWTP LAMIA
2	WWTP ORESTIADA
3	WWTP ALEXANDROUPOLIS
4	WWTP SERRES
5	WWTP KATERINI
6	WWTP LIMASOL (CYPRUS)
7	WWTP KIMOLOS
8	WWTP MILITARY PLANTS / N. SANDA, KILKIS
9	WWTP FILIPPIADA
10	WWTP KALAMBAKA
11	WWTP KAVALA
12	WWTP KASPAKAS-KORNOS / LEMNOS
13	WWTP METHYMNA LESVOS
14	WWTP INDUSRIAL AREA PATRAS
15	WWTP LOUTRA LESVOS
16	WWTP LOUTRA KYTHIRA
17	WWTP LOUTRA KIMI
18	WWTP WOOD INDUSTRY "ALPHA WOOD"
19	WWTP SAMOTHRAKI
20	WWTP PLATYS GIALOS, SIFNOS
21	WWTP MUNICIPALITY NESTOR MESSINIA
22	WWTP ASTAKOS
23	SEWAGE PS OF ATHENS WM FACILITY MANAGEMENT OPERATOR, FREATIS PL. PIREUS
24	SEWAGE PS OF ATHENS WM FACILITY MANAGEMENT OPERATOR, ALIMOS
25	SEWAGE PS OF ATHENS WM FACILITY MANAGEMENT OPERATOR, MOSCHATO, PIREUS
26	SEWAGE PS OF ATHENS WM FACILITY MANAGEMENT OPERATOR, VOULA
27	SEWAGE PS KOILA-EXOHI-KARDIA, KOZANI
28	CENTRAL SEWAGE PS FILYRON
29	SEWAGE PS OF LARISA WM FACILITY MANAGEMENT OPERATOR, TRANSPORT PS TO THE WWTP
30	SEWAGE PS OF KAVALA WM FACILITY MANAGEMENT OPERATOR, TRANSPORT PS TO THE WWTP
31	SEWAGE PS MARMARI EVOIA
32	SEWAGE PS ALIVERI EVOIA
33	SEWAGE PS FIRA SANTORINI
34	SEWAGE PS OIA SANTORINI
35	SEWAGE PS HERSONISOS / CRETE
36	SEWAGE PS ASTAKOS / ETOLOAKARNANIA
37	SEWAGE PS HERACLEION / CRETE

3/12/19

WILO HELLAS ABEE
ΑΓΙΟΥ ΑΘΑΝΑΣΙΟΥ 80
145 69 ΑΝΟΙΞΗ – ΑΤΤΙΚΗΣ
ΕΛΛΑΔΑ

Τ. +30 210 6248 0
F. +30 210 6248 360
wilo.info@wilo.gr
www.wilo.gr

wilo

REFERENCE LIST WITH SEWAGE PUMPS & MIXERS WILO

38	CENTRAL SEWAGE PS NAFPAKTOS
39	SEWAGE PS MUNIC. KIMMERIA / XANTHI
40	SEWAGE PS PETRA, LESVOS
41	SEWAGE PS MUNICIPALITIES HANIA, CRETE
42	CENTRAL SEWAGE PS EPIDAUROS
43	CENTRAL SEWAGE PS KAMPOHORIA, HIOS
44	SEWAGE PS PALIO, KAVALA
45	SEWAGE PS N. PERAMOS, KAVALA
46	SEWAGE PS RHODOS
47	SEWAGE PS GASTOUNI & VARTHOLOMIO
48	LANDFIL NAFPAKTOS
49	LANDFIL EDESSA
50	LANDFIL ARTA
51	SEWAGE PS OF CENTRAL SEWAGE COLLECTING NETWORK, EDESSA
52	CENTRAL SEWAGE PS KASPAKAS & KORNOS, LEMNOS
53	SEWAGE PS TINOS
54	WWTP AGRICULTURAL COOPERATIVE OF KALAVRYTA
55	CENTRAL SEWAGE PS LIMENAS, THASOS
56	CHEMICAL WW PS OF THE CENTRAL HOSPITAL ALEXANDROUPOLIS
57	SEWAGE PS ALEXANDROUPOLIS
58	SEWAGE PS EDIPSOS
59	SEWAGE PS AT THE FACTORY "SOJA HELLAS S.A.", EVOIA
60	WW PS OF THE CENTRAL MILITARY HOSPITAL 424 THESSALONIKI
61	SEWAGE PS RESIDENTIAL GROUP MICHAILIDES, CRETE
62	SEWAGE PS RESIDENTIAL GROUP DASKALOPOULOS, ATHENS
63	CENTRAL SEWAGE PS PHILIPPI, KAVALA
64	ATHENS AIRPORT "EL. VENIZELOS" - CHEMICAL WW PS
65	WATER DAM PANAGIOTIKO, MAGNESIA
66	SEWAGE AND STORM WATER PS AT THE SOUTH ATHENS SUBURBS METRO STATIONS
67	SEWAGE MIXERS AT THE TANNERIES WWTP OF THESSALONIKI
68	SEWAGE PS OF ELEFTHERES WM FACILITY MANAGEMENT OPERATOR, TRANSPORT PS TO THE WWTP
69	ELEFTHERIOS VENIZELOS INTERNATIONAL AIRPORT - PS OF WASTE CHEMICAL NEUTRALIZATION
70	SEWAGE PS OF ETHEL DEPOT - RENTIS
71	SEWAGE PS VATERO KOZANIS
72	SEWAGE PS TITHOREA FTHIOTIDAS
73	WWTP INDUSTRIAL AREA DRAMAS
74	WWTP SKYROS

6/12/18

WILO HELLAS ABEE
ΑΓΙΟΥ ΑΘΑΝΑΣΙΟΥ 80
145 69 ΑΝΟΙΞΗ – ΑΤΤΙΚΗΣ
ΕΛΛΑΔΑ

T. +30 210 6248 300
F. +30 210 6248 360
wilo.info@wilo.gr
www.wilo.gr

wilo

REFERENCE LIST WITH SEWAGE PUMPS & MIXERS WILO

75	SEWAGE PS LAVRION ATTICA
76	SEWAGE PS AS1 & AS3 OF RHODES INTERNATIONAL AIRPORT
77	WWTP ELLOMENOU LEFKADAS (FILTER PUMPS)
78	CANAL LINING OF LOUROS AITOLOAKARNANIA
79	WWTP OF ELVAL INDUSTRY
80	DRAINAGE & SEWAGE PS OF SCHINIAS JUDICIAL OFFICIALS SETTLEMENT
81	LANDFIL PERA GALINA
82	SEWAGE PS O-A2 & B1 CAPITAL OF ANDROS
83	SEWAGE PS SA-1 & SA-2 SIGRI LESVOS
84	WWTP ERATINH
85	WWTP ALIVERI
86	DRAINAGE PS RAGIOU - KESTRINIS THESPROTIAS
87	WWTP ETVA VIPE -PATRAS
88	SEWAGE PS NEA PERAMOS ATTIKA
89	LANDFIL KOZANI 3rd CELL
90	SEWAGE PS EMPORIOU THIRAS
91	SEWAGE PS DROSIA PREVEZA
92	SEWAGE PS PANORAMA-POLICHNI SALONICA
93	SEWAGE PS AGIOS THOMAS LARISA
94	WWTP ETVA VIPE KOMOTINI
95	WWTP OF CAMPING AT GITHIO
96	DRAINAGE PS RAGIOU - KESTRINIS THESPROTIAS - AGIONAZI
97	SEWAGE PS LEFKAKIA NAFPLION
98	SEWAGE PS AGIA PARASKEVI LESVOS (PS NAPIS & PS VIOKA)
99	LANDFIL XYLOKASTRO
100	SEWAGE PS A0, A1, A1.1, A2 LOUROS PREVEZAS
101	SEWAGE PS NEAPOLI AGRINIO
102	WWTP PELLANAS
103	SEWAGE PS AVRAMIOU-LEFKOHORAS
104	SEWAGE PS AGATHOUPOLIS & NEAS METHONIS
105	WWTP ARKALOCHORI CRETA
106	SEWAGE PS OF KLADA, KOKKINORACHI & AFYSSOS SETLEMENTS - SPARTI MUNICIPALITY
107	SEWAGE PS ETOLIKO ETOLOAKARNANIAS (RENNOVATION)
108	SEWAGE PS KALESA OF MALEVYZI MUNICIPALITY HERAKLIO CRETA
109	SEWAGE PS MAROULAS SETTLEMENT - RETHIMNO MUNICIPALITY
110	WASTE BURIAL (XTA) RESTORATION OF KALAMAKI TAGARADES AREA - THERMI MUNICIPALITY SALONICA - PHASE C'

3/12/18

WILO HELLAS ABEE
ΑΓΙΟΥ ΑΘΑΝΑΣΙΟΥ 80
145 69 ΑΝΟΙΞΗ – ΑΤΤΙΚΗΣ
ΕΛΛΑΔΑ

T. +30 210 6248 300
F. +30 210 6248 360
wilo.info@wilo.gr
www.wilo.gr

wilo

REFERENCE LIST WITH SEWAGE PUMPS & MIXERS WILO

111	SEWAGE PS OF ROMA SETTLEMENT AT ALIVERI NEA IONIA VOLOS
112	SEWAGE PS OF STYLIDA
113	LANDFIL KOMOTINI
114	SEWAGE PS AKROTIRI THIRA
115	SEWAGE PS ACHARAVI-RODA THINALIA CORFU MUNICIPALITY
116	SEWAGE P.S. VRONTOU-KARITSA - DION MUNICIPALITY- PIERIA REGION
117	SEWAGE PS RODITI KOMOTINIS
118	WWTP CHORA ANDROS
119	WWTP OF MYKONOS HELLENIC AIRFORCE 6th MSEP
120	EPANOMI SALONICA SEWAGE DISPOSAL
121	WWTP MIKI RODOPI SETTLEMENT (PORTABLE PUMPS)
122	SEWAGE PS ALIARTOS VIOTIAS
123	SEWAGE PS POROS OF KEFALLONIA MUNICIPALITY
124	WWTP KALLIRACHI THASOS
125	SEWAGE PS AGIOS KONSTANTINOS SETTLEMENT - LAVRION ATTICA
126	SEWAGE & DRAINAGE PS NEAS OUTALIS OF LEMNOS (COMPLETION)
127	SEWAGE PS OF PERISSA SETTLEMENT - PERIVOLOU AREA OF THIRA
128	IMPROVEMENT & MODERNIZATION OF KASTORIA NEAR LAKE SEWAGE PS
129	WWTP STRATONI CHALKIDIKI
130	SEWAGE PS OF CHRISOCHORI, ERATEINOU, GRAVOUNA WITH VACUUM SYSTEM
131	WWTP NEAPOLI LAKONIAS
132	SEWAGE PS PALAIOELEFTHROCHORIOU OF PIDNA-KOLINDROS MUNICIPALITY
133	WWTP NEA KOUTALI LEMNOS
134	SEWAGE PUMPING STATIONS OF PLATANAKIA, AGIOS SPYRIDON, KONTARIOTISSA, NEA EFESSOS, DION MUNICIPALITY
135	PORTABLE SEWAGE PUMP WWTP ALEXANDROUPOLIS
136	INTERNAL SEWAGE NETWORK OF XAMOUDOCHORI-VLACHERNIOTISSA SETTLEMENTS, CONNECTION WITH MAIN PIPE OF DEYAVA
137	ENLARGEMENT OF NESTOS MUNICIPALITY WWTP
138	PS CLOSE TO K.A.P.I. KOLCHIKOU, LAGADAS MUNICIPALITY
139	SEWAGE NETWORK OF SYKARAKI, ALESIA, KOZI, KALAMI, GOUNARI SETTLEMENTS, SPARTI MUNICIPALITY AND CONNECTION WITH THE EXISTING NETWORK
140	IMPROVEMENT OF LINDOS RHODES WWTP
141	MODERNIZATION OF 2 SEWAGE P.S. AT PETRA LESVOS
142	PHASE B' OF TRIKALA LANDFILL
143	RESTORATION OF WASTE DISPOSAL SITE AT POSITION OUTZA-LEMONOU, LESVOS MUNICIPALITY
144	SEWAGE DISPOSAL (INTERNAL SEWAGE NETWORK OF MYRSINI SETTLEMENT)

3/12/18

WILO HELLAS ABEE
ΑΓΙΟΥ ΑΘΑΝΑΣΙΟΥ 80
145 69 ΑΝΟΙΞΗ – ΑΤΤΙΚΗΣ
ΕΛΛΑΔΑ

Τ. +30 210 6248 300
F. +30 210 6248 360
wilo.info@wilo.gr
www.wilo.gr

wilo

REFERENCE LIST WITH SEWAGE PUMPS & MIXERS WILO

145	SEWAGE NETWORK OF ARMENOI, KOUMOI, FOTEINO, SAINT GEORGE, KASTELLO SOMATA, CHROMONASTIRI, ROUSSOSPITO, MYLOI SETTLEMENTS OF RETHIMNO MUNICIPALITY
146	SEWAGE DISPOSAL OF PARGA THESPROTIAS SETTLEMENETS
147	RENOVATION OF ORMYLIA WWTP
148	WWTP OLYMPIADA CHALKIDIKI
149	WWTP REPLACEMENT OF ELEFTHEROUPOLI
150	REHABILITATION OF SIX WASTE DISPOSAL SITES AT PELLA REGION
151	WWTP OF PIGADIA KARPATHOS & UNDERSEA DISPOSAL PIPE
152	WWTP OF THIRASIA ISLAND
153	DRAINAGE OF ARCHAEOLOGICAL SITE IN ACHINOS FTHIOTIDAS
154	SEWAGE COLLECTION, TRANSPORTATION AND PROCESSING AT WWTP AMALIADAS OF ILIDA SETTLEMENTS
155	SEWAGE PUMPING STATION AT PORT OF RAFINA
156	WWTP CHALKIS EVIA
157	COMPLETION OF DREPANO ARGOLIS SEWAGE DISPOSAL
158	COMPLETION OF SEWAGE DISPOSAL NETWORK AT NEAR LAKE TRICHONIDA SETTLEMENTS
159	RENOVATION OF PLOMARI LESVOS SEWAGE P.S.
160	SEWAGE PS FLESSAS SKIATHOS

3/12/18

Έργο: Ημερ/νία: 2017-09-06
Αριθμός Έργου: Συντάκτης:

wilo

Τεχνικά στοιχεία

Υποβρύχια αντλία λυμάτων Rexa PRO V06 DA-623 / EAD1X4-T0015-540-O

Αντλία							
Τύπος αντλίας		PROV06 D A - 623		Είδος εγκατάστασης		Suspension device DN65 DN65/2RK	
Πτερωτή (διάμ.)	Μέγ. Δυνατή	135	mm				
	Τυπικό (βασικό)	135	mm	Ελεύθερο πέρασμα		65	mm
	Σχεδιασμ.	135	mm	Στόμιο αναρ.	Βαθμ. PN	PN10	
	Ελάχ. Δυνατή	135	mm		Ονομ. διάμ.	DN65	
Ονομαστ. αριθμός στροφών		1450	1/min		Πρότυπο	WILO-S	
Συχνότητα		50	Hz	Στόμιο κατάθλ.	Βαθμ. PN	PN10	
Τύπος πτερωτής		Πτερωτή Vortex			Ονομ. διάμ.	DN65, DN80, Size 2.5, Size 3	
Κατασκευή πτερωτής		Ανοικτό			Πρότυπο	WILO-D	

Βάρη				
Βάρος υδραυλ. τμήματος αντλίας	Μέγ. 20,1	kg	Βάρος συγκροτήματος	Μέγ. 60,1 kg
Βάρος κινητήρα	40	kg		

Υλικά κατασκευής			
Κέλυφος αντλίας	EN-GJL-250		
Πτερωτή	EN-GJL-250		
Κέλυφος κινητήρα	EN-GJL-250		

Κινητήρας					
Ονομασία κινητήρα	P 13.2-10/EAD1X4-T-L01		Αριθμός πόλων	4	
Ονομ. ισχύς	1,5	kW	Ονομαστ. ταχύτ. Περιστροφής	1413	1/min
Απορρόφηση ισχύος σε Ονομ. ισχύ				1,97	kW
Ονομ. τάση				400 ~3	V
Απορρόφ. ρεύματος στην ονομ. ισχύ				3,7	A
Βαθμός απόδ. στην ονομ. ισχύ				76,3	%
συνφ στην Ονομ. ισχύ	0,77		Ονομ. συχνότητα	50	Hz
συνφ εκκίνησης	0,5		Είδος λειτουργίας: υγρή	S1	
Ρεύμα εκκίνησης DOL	25	A	Είδος λειτουργίας: ξηρή	S2 30, S3 25%	
Ρεύμα εκκίνησης Υ/Δ	8,3	A	Μέγ. θερμοκρασία ρευστού	313	K
Ροπή στρέψης εκκίνησης	29	Nm	Μέγ. αριθμ. ωριαίων εκκιν.	50	
Ροπή αδράνειας μάζας	0,0028	kg m²	Βαθμός προστασίας	IP 68	
Επιλεγμ. αντιεκρ. Προστασία	ATEX		Αριθμός Ex	BVS 11 ATEX E 119 X	
Σήμανση Ex	II 2G Ex db IIB T4 Gb				
Καλώδιο σύνδεσης κινητήρα			7G1,5 H07RN-F		

Στοιχεία σημείου λειτουργίας					
Παροχή	5,2	m³/h	Ρευστό μέσον	Νερό, καθαρό	
Μαν. ύψος	6,4	m	Τιμή NPSH της αντλίας	4,6	m
Ισχύς στον άξονα P_2	0,44	kW	Ταχύτητα περιστροφής	1458	1/min
Βαθμός απόδ. Αντλίας	20,5	%	Ολικός βαθμός απόδοσης	$= \frac{P_2 * \text{Βαθμός απόδ. Αντλίας}}{P_1}$	
Απορροφώμενη ισχύς P_1	0,71	kW			
Μέγ. παροχή	54,4 m³/h	Μαν. ύψος σε Μέγ. Παροχή	1,4 m	Μαν. ύψος σε μηδεν. παροχή	6,7 m
Σημείο βέλτ. Απόδ. Q (ΣΒΑ)	23,3	m³/h	Σημείο βέλτιστης απόδοσης H (ΣΒΑ)	4,9	m
Νο είδους	6064738				

3/12/18

Έργο:
Αριθμός Έργου:

Ημερ/νία: 2017-09-06
Συντάκτης:

wilo

Τεχνικά στοιχεία

Υποβρύχια αντλία λυμάτων Rexa PRO V06 DA-623 / EAD1X4-T0015-540-O

Τεχνική περιγραφή
Υποβρύχια αντλία λυμάτων, ως υποβρύχιο συγκρότημα με κινητήρα, για σταθερή, κατακόρυφη τοποθέτηση, για άντληση ανεπεξέργαστων χημικά και μηχανικά μη διαβρωτικών για την αντλία, λυμάτων. Ακτινικά διατεταγμένο στόμιο κατάθλιψης και αξονική αναρρόφηση. Το συγκρότημα είναι κατασκευασμένο με τρόπο εύκολο για τη συντήρηση. Οι παροχές πρέπει να εξασφαλίζονται κατά ISO 9906 Παρ. A.

3/12/18

Έργο: Ημερ/νία: 2017-09-06
Αριθμός Έργου: Συντάκτης:

wilo

Καμπύλες απόδοσης

Υποβρύχια αντλία λυμάτων Rexa PRO V06 DA-623 / EAD1X4-T0015-540-O

Στοιχεία ισχύος σε σχέση με: Νερό, καθαρό [100%] ; 293K; 998,19kg/m³; 1,0004mm²/s
Απόκλιση κατά ISO 9906 / Παράρτημα A.2

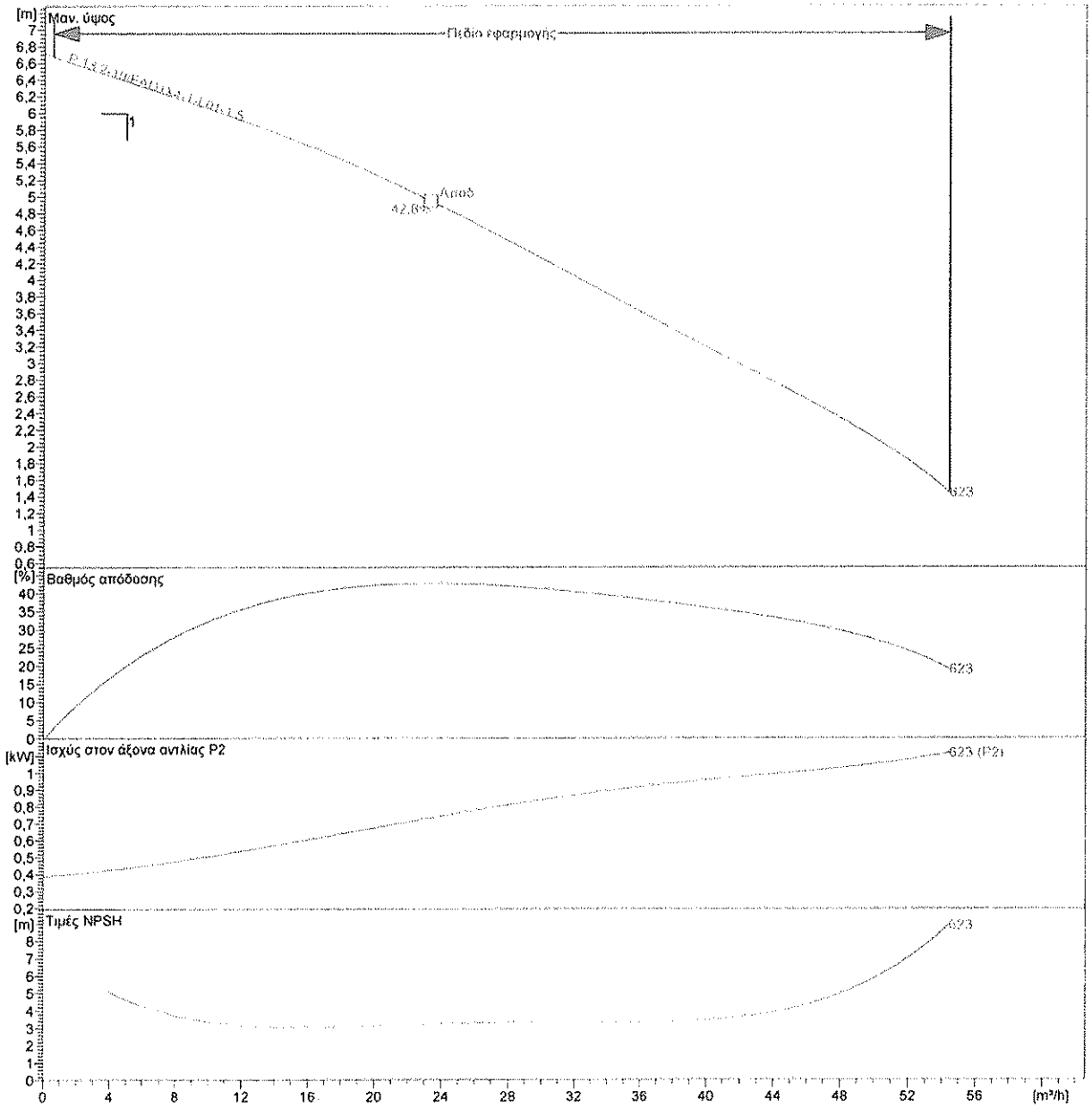

Αντλία			Στοιχεία σημείου λειτουργίας		
Πτερωτή (διάμ.) Σχεδιασμ.	135	mm	Παροχή	5,2	m³/h
Ονομαστικός αριθμός στροφών	1450	1/min	Μαν. ύψος	6,4	m
Συχνότητα	50	Hz	Ισχύς στον άξονα P_2	0,44	kW
Τύπος πτερωτής	Πτερωτή Vortex		Βαθμός απόδ. Αντλίας	20,5	%
Κινητήρας			Απορροφώμενη ισχύς P_1	0,71	kW
Ονομ. ισχύς	1,5	kW	Τιμή NPSH της αντλίας	4,6	m
Επιλεγμ. αντιεκρ. Προστασία	ATEX		Ταχύτητα περιστροφής	1458	1/min

3/12/18

Έργο:
Αριθμός Έργου:

Ημερ/νία: 2017-09-06
Συντάκτης:

wilo

Τεχνικά στοιχεία

Υποβρύχια αντλία λυμάτων

Rexa PRO V06 DA-623 / EAD1X4-T0015-540-O

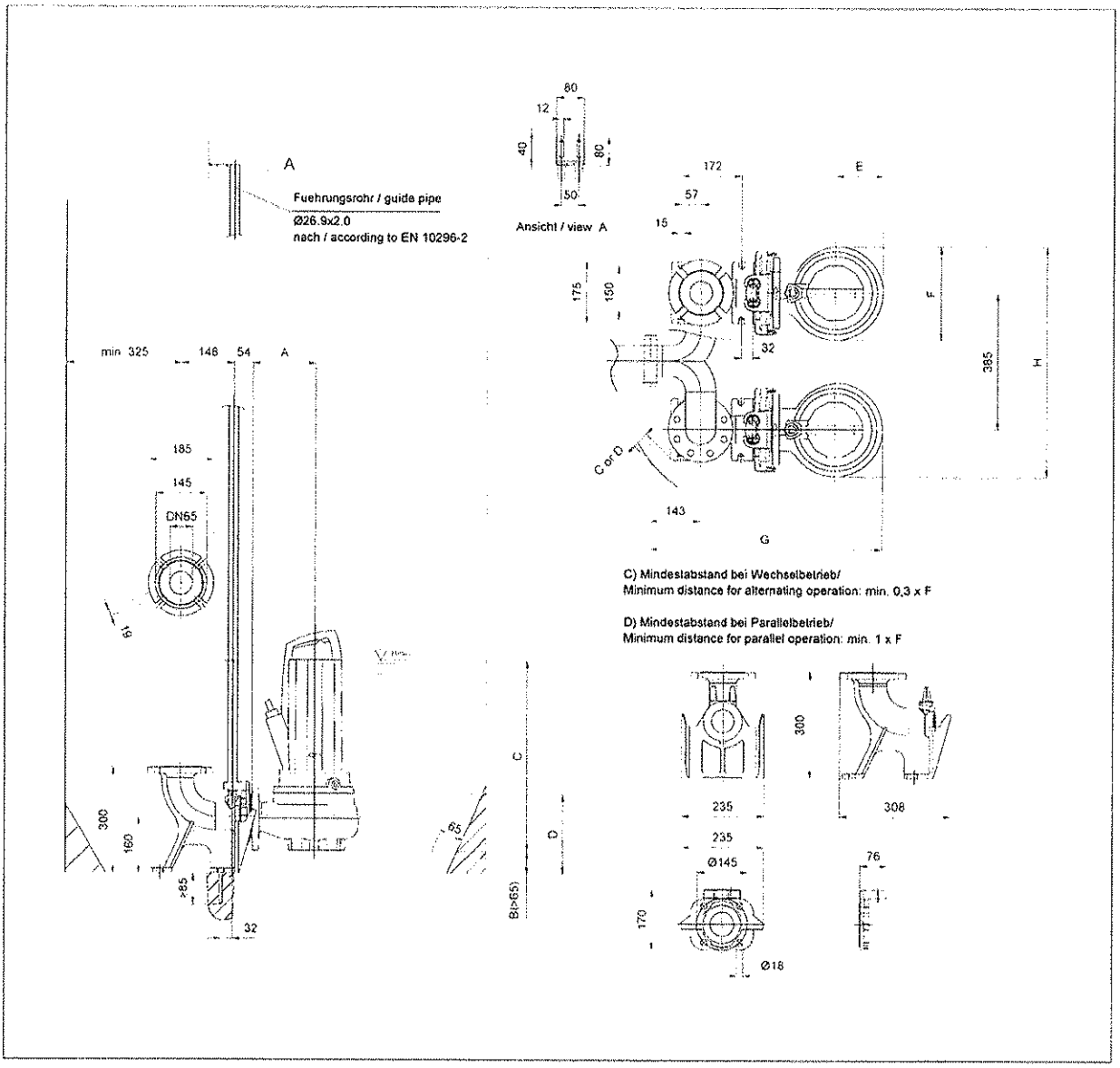

Διαστάσεις σε mm				Συνδέσεις
A	180			Στόμιο αναρ. DN65 PN10
B	65			
D	225			
E	147			
F	263			Στόμιο κατάθλ. DN65, DN80, Size 2.5, Size 3, cutoff, Ver. 02 PN10
G	672			
H	648			
				Suspension device DN65 DN65/2RK

3/12/18

Έργο: Ημερ/νία: 2017-09-06
Αριθμός Έργου: Συντάκτης:

wilo

Στοιχεία κινητήρα

P 13.2-10/EAD1X4-T-L01-1,5 1,5 kW 400 V 50Hz 3~

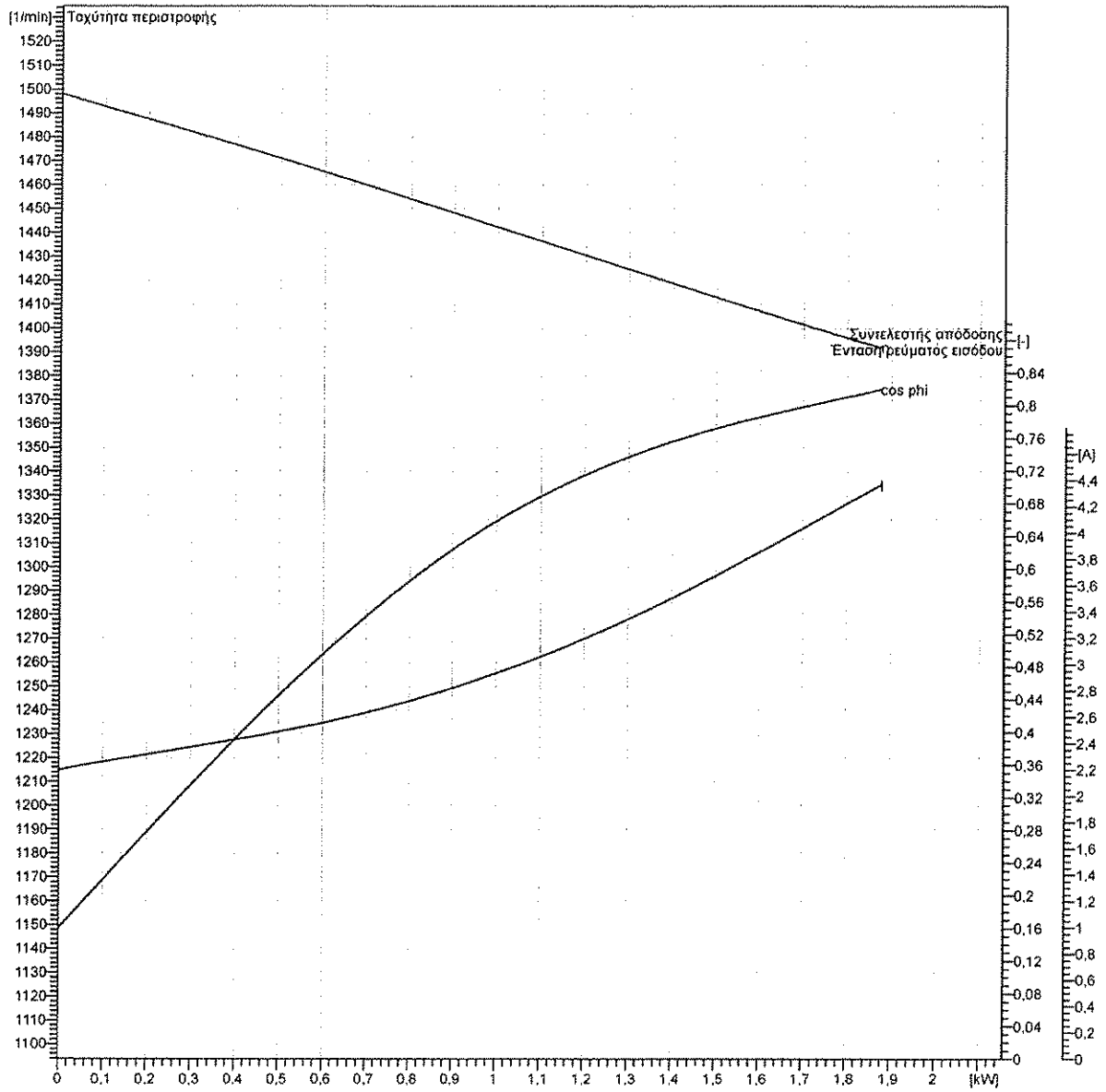

Στοιχεία εφαρμογής			Στοιχεία κινητήρα		
Είδος υποβρύχιας λειτουργίας	S1		Απορρόφηση ισχύος σε Ονομ. ισχύ	1,97	kW
Είδος λειτουργίας: ξηρή	S2 30, S3 25%		Ονομ. ισχύς	1,5	kW
Συντελεστής Service	1		Ονομαστ. ταχύτ. Περιστροφής	1413	1/min
Μέγ. θερμοκρασία ρευστού	313	K	Απορρόφ. ρεύματος στην ονομ. ισχύ	3,7	A
Αντιεκρηκτική προστασία			Μέγ. αριθμ. ωριαίων εκκιν.	50	
Επιλεγμ. αντιεκρ. Προστασία	ATEX		Βάρος κινητήρα	40	kg
Αριθμός Ex	BVS 11 ATEX E 119 X		Βαθμός απόδ. στην ονομ. ισχύ	76,3	%
Σήμανση Ex	II 2G Ex db IIB T4 Gb		συνφ στην Ονομ. ισχύ	0,77	
Καλώδιο σύνδεσης κινητήρα			Ρεύμα εκκίνησης DOL	25	A
Καλώδιο σύνδ. κινητ.για εκκίνηση DOL	7G1,5 H07RN-F		συνφ εκκίνησης	0,5	
Καλώδιο σύνδ. κινητ. για εκκίνηση Y/Δ			Ροπή στρέψης εκκίνησης	29	Nm
Μέγ. δυνατό καλ. σύνδ. Κινητήρα	7x1,5	mm²	Ροπή αδράνειας μάζας	0,0028	kg m²

3/12/18

© Siemens AG 2015

Level Measurement

Continuous level measurement - Ultrasonic transmitters

SITRANS Probe LU

Overview

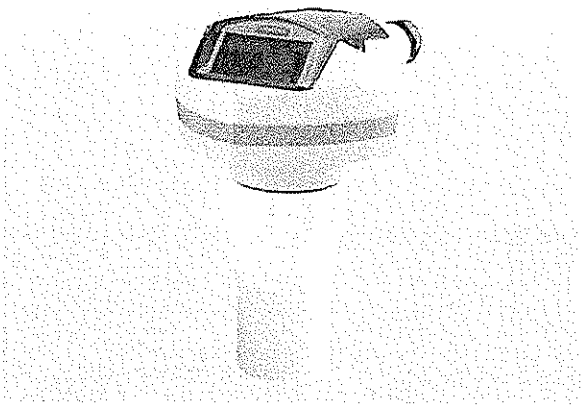

SITRANS Probe LU is a 2-wire loop powered ultrasonic transmitter for level, volume and flow monitoring of liquids in open channels, storage vessels, and simple process vessels.

Benefits

- Continuous level measurement up to 12 m (40 ft) range
- Easy installation and simple start-up
- Programming using infrared Intrinsically Safe handheld programmer, SIMATIC PDM or HART Communicator
- Communication using HART or PROFIBUS PA
- ETFE or PVDF transducers for chemical compatibility
- Sonic Intelligence signal processing
- Auto False-Echo Suppression for fixed obstruction avoidance
- Level to volume or level to flow conversion

Application

The SITRANS Probe LU is ideal for level monitoring in the water and wastewater industry, chemical storage vessels, and small bulk hoppers.

The range of SITRANS Probe LU is 6 or 12 m (20 or 40 ft). Using Sonic Intelligence, Auto False Echo Suppression for fixed obstruction avoidance, and accuracy of 0.15 % of range or 6 mm (0.25 inch), the Probe LU provides unmatched reliability.

The Probe LU offers two communications options: HART or PROFIBUS PA (Profile version 3.0, Class B).

The transducer on the Probe LU is available as ETFE or PVDF to suit the chemical conditions of your application. As well, for applications with varying material and process temperatures, the Probe LU incorporates an internal temperature sensor to compensate for temperature changes.

- Key Applications: chemical storage vessels, filter beds, liquid storage vessels

Configuration

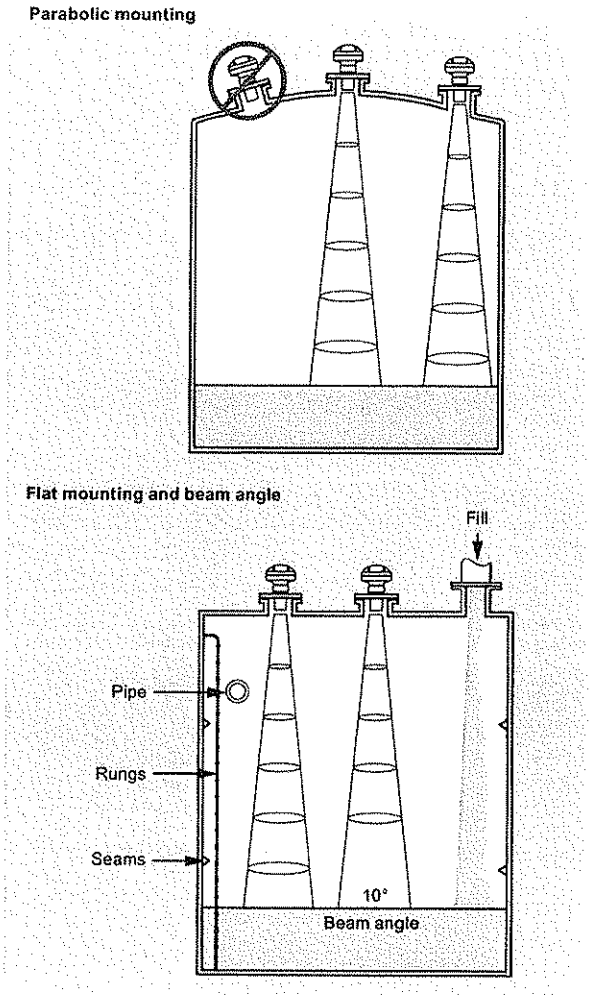

SITRANS Probe LU mounting

© Siemens AG 2015

Technical specifications

Mode of operation	
Measuring principle	Ultrasonic level measurement
Typical application	Level measurement in storage vessels and simple process vessels
Inputs	
Measuring range	
• 6 m (20 ft) model	0.25 ... 6 m (10 inch ... 20 ft)
• 12 m (40 ft) model	0.25 ... 12 m (10 inch ... 40 ft)
Frequency	54 kHz
Outputs	
mA/HART	
• Range	4 ... 20 mA
• Accuracy	± 0.02 mA
PROFIBUS PA	Profile 3, Class B
Performance	
Resolution	≤ 3 mm (0.12 inch)
Accuracy	± the greater of 0.15 % of range or 6 mm (0.24 inch)
Repeatability	≤ 3 mm (0.12 inch)
Blanking distance	0.25 m (10 inch)
Update time	≤ 5 s
• 4/20 mA/HART version	≤ 5 s at 4 mA
• PROFIBUS version	≤ 4 s at 15 mA current loop
Temperature compensation	Built-in to compensate over temperature range
Beam angle	10°
Rated operating conditions	
Ambient conditions	
• Location	Indoor/outdoor
• Ambient temperature	-40 ... +80 °C (-40 ... +176 °F)
• Relative humidity/ingress protection	Suitable for outdoor
• Installation category	I
• Pollution degree	4
Medium conditions	
• Temperature at flange or threads	-40 ... +85 °C (-40 ... +185 °F)
• Pressure (vessel)	0.5 bar g (7.25 psi g)
Design	
Material (enclosure)	PBT (Polybutylene Terephthalate)
Degree of protection	Type 4X/NEMA 4X, Type 6/NEMA 6/ IP67/IP68 enclosure
Weight	2.1 kg (4.6 lb)
Cable inlet	2 x M20 x 1.5 cable gland or 2 x ½" NPT thread or 1 x M20 x 1.5 and 1 x ½" NPT
Material (transducer)	Buna-N seal with ETFE (Ethylene Tetrafluoroethylene) or PVDF (Polyvinylidene Fluoride)

Process connection	
Threaded connection	2" NPT [(Taper), ANSI/ASME B1.20.1] R 2" [(BSPT), EN 10226] or G 2" [(BSPP), EN ISO 228-1]
Flange connection	3 inch (80 mm) universal flange
Other connection	FMS 200 mounting bracket (see page 4/187) or customer supplied mount
Display and Controls	
Interface	Local: LCD display with bar graph Remote: Available via HART or PROFIBUS PA
Configuration	Using Siemens SIMATIC PDM (PC) or HART handheld communicator or Siemens infrared handheld programmer
Memory	Non-volatile EEPROM
Power supply	
4 ... 20 mA/HART	Nominal 24 V DC with 550 Ω maximum; maximum 30 V DC 4 ... 20 mA
PROFIBUS PA	12, 13, 15, or 20 mA depending on programming (General Purpose or Intrinsically Safe version) Per IEC 61158-2
Certificates and Approvals	
General	$CSA_{US/C}$, FM, CE, RCM
Marine (only applies to HART communication option)	• Lloyd's Register of Shipping • ABS Type Approval
Hazardous	
• Intrinsically Safe (Europe)	ATEX II 1G Ex ia IIC T4 Ga
• Intrinsically Safe (USA/Canada)	CSA/FM, Class I, Div. 1, Groups A, B, C, D; Class II, Div. 1, Groups E, F, G; Class III T4
• Intrinsically Safe (International)	SIR 13.0008X Ex ia IIC T4 Ga
• Intrinsically Safe (Brazil)	INMETRO Ex ia IIC T4 Ga
• Non-incendive (USA)	FM Class I, Div. 2, Groups A, B, C, D T4
Handheld Programmer	
Intrinsically Safe Siemens handheld programmer	Infrared receiver
• Approvals for handheld programmer	ATEX II 1GD / IECEx SIR 09.0073 Ex ia IIC T4 Ga Ex iaD 20 T135 °C FM/CSA Class I, II, III, Div. 1, Groups A,B,C,D,E,F,G T6
Ambient temperature	-20 ... 50 °C (-5 ... 122 °F)
Interface	Proprietary infrared pulse signal
Power	3 V lithium battery (non-replaceable)

3/12/18

© Siemens AG 2015

Selection and Ordering data		Article No.
SITRANS Probe LU **2-wire, loop powered ultrasonic transmitter for level, volume and flow monitoring of liquids in open channels, storage vessels, and simple process vessels.** ↗ Click on the Article No. for the online configuration in the PIA Life Cycle Portal.	↗	**7ML5221-**
Enclosure/Cable Inlet		
Plastic (PBT), 1 x M20 x 1.5 and 1 x ½" NPT (no cable glands supplied)	✧	**0**
Plastic (PBT), 2 x M20 x 1.5 (includes 1 general purpose cable gland: 7ML1930-1AM)	✧	**1**
Plastic (PBT), 2 x ½" NPT (no cable glands supplied)	✧	**2**
Range/Transducer material		
6 m (20 ft), ETFE	✧	**A**
6 m (20 ft), PVDF Copolymer	✧	**B**
12 m (40 ft), ETFE	✧	**C**
12 m (40 ft), PVDF Copolymer	✧	**D**
Process connection		
2" NPT [(Taper), ANSI/ASME B1.20.1]	✧	**A**
R 2" [(BSPT), EN 10226]	✧	**B**
G 2" [(BSPP), EN ISO 228-1]	✧	**C**
Communication/Output		
4 ... 20 mA, HART	✧	**1**
PROFIBUS PA	✧	**2**
Approvals		
General Purpose, FM, $CSA_{US/C}$, CE, RCM, KCC	✧	**1**
Non-incendive, FM Class I, Div. 2 Groups A,B,C,D T5[1]	✧	**4**
Intrinsically Safe, CSA/FM Class I, Div. 1, Groups A, B, C, D; Class II, Div. 1, Groups E, F, G; Class III T4[2]	✧	**5**
Intrinsically Safe ATEX 1G / IECEx / INMETRO Ex ia IIC T4 Ga, RCM, KCC[2]	✧	**6**
Intrinsically Safe ATEX 1G / IECEx / INMETRO Ex ia IIC T4 Ga, RCM, KCC[3]	✧	**7**
Intrinsically safe, CSA/FM Class I, Div. 1, Groups A, B, C, D; Class II, Div. 1 Groups E, F, G; Class III T4[3]	✧	**8**

1) Available with Enclosure/Cable Inlet option 2 only.
2) Available with communication option 2 only.
3) Available with communication option 1 only.

✧ We can offer shorter delivery times for configurations designated with the Quick Ship Symbol ✧. For details see page 9/5 in the appendix.

Selection and Ordering data	Order code
Further designs Please add "**-Z**" to Article No. and specify Order code(s).	
Stainless steel tag [69 x 50 mm (2.71 x 1.97 inch)]: ✧ Measuring-point number/identification (max. 27 characters) specify in plain text	**Y15**
Operating Instructions for HART/mA device	Article No.
English	**A5E32337695**
French	**7ML1998-5HT11**
German Note: The Operating Instructions should be ordered as a separate item on the order.	**A5E34957881**
Additional Multi-language Quick Start manual This device is shipped with the Siemens Level and Weighing manual DVD containing the ATEX Quick Start and Operating Instructions library.	**A5E32168031**
Operating Instructions for PROFIBUS PA device	
English	**A5E32337708**
German Note: The Operating Instructions should be ordered as a separate item on the order.	**A5E34957884**
Additional Multi-language Quick Start manual This device is shipped with the Siemens Level and Weighing manual DVD containing the ATEX Quick Start and Operating Instructions library.	**A5E32081626**
Accessories	
Handheld programmer, Intrinsically Safe, EEx ia	**7ML5830-2AH**
Handheld programmer, General Purpose approvals	**7ML1830-2AN**
Handheld programmer, Infrared, Intrinsically Safe, PROFIBUS PA	**7ML5830-2AJ**
HART modem/USB (for use with a PC and SIMATIC PDM)	**7MF4997-1DB**
2" NPT locknut, plastic	**7ML1830-1DT**
2" BSPT locknut, plastic	**7ML1830-1DQ**
3" ASME, DN 65 PN 10, JIS 10K 3B ETFE Flange adapter for 2" NPT	**7ML1830-1BT**
3" ASME, DN 65 PN 10, JIS 10K 3B ETFE Flange adapter for 2" BSPT	**7ML1830-1BU**
One General Purpose polymeric cable gland M20 x 1.5, rated for -20 ... +80 °C (-4 ... +176 °F)	**7ML1930-1AM**
One metallic cable gland M20 x 1.5, rated -40 ... +80 °C (-40 ... +176 °F) for General Purpose or ATEX EEx e installations (available for HART only)	**7ML1930-1AP**
One metallic cable gland M20 x 1.5, rated -40 ... +80 °C (-40 ... +176 °F) with integrated shield connection (available for PROFIBUS PA)	**7ML1930-1AQ**
Probe LU, rock guard/sunshield kit, 304 stainless steel	**7ML1930-1GH**
SITRANS RD100, loop powered display - see Chapter 7	**7ML5741-...**
SITRANS RD200, universal input display with Modbus conversion - see Chapter 7	**7ML5740-...**
SITRANS RD300, dual line display with totalizer and linearization curve and Modbus conversion - see Chapter 7	**7ML5744-...**
SITRANS RD500 web, universal remote monitoring solution for instrumentation - see Chapter 7	**7ML5750-...**
For applicable back up point level switch see point level measurement section.	
Plastic lid	**7ML1830-1KB**

✧ We can offer shorter delivery times for configurations designated with the Quick Ship Symbol ✧. For details see page 9/5 in the appendix

© Siemens AG 2015

Options

Flange adapter for mating 2" NPT or 2" BSP process connections to 3" ASME, DN 65 PN 10 and JIS 10K 3B flanges

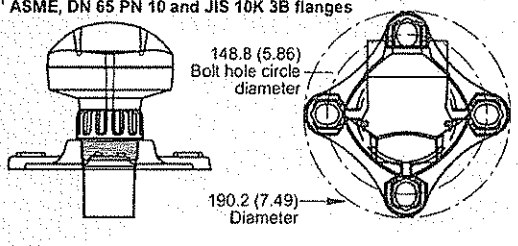

SITRANS Probe LU optional flange adapter, dimensions in mm (inch)

SITRANS Probe LU with FMS 200 mounting bracket

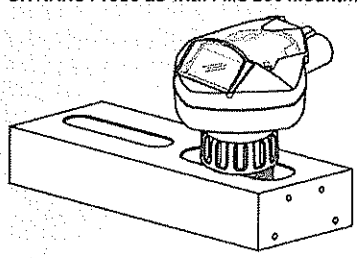

SITRANS Probe LU with optional mounting bracket

Dimensional drawings

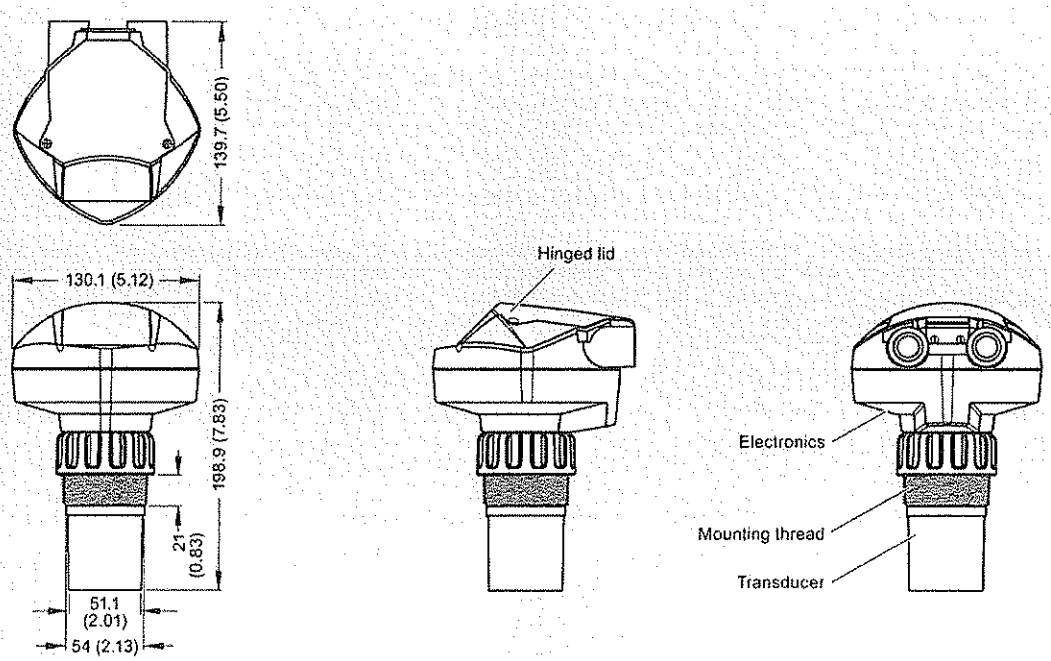

Note: Above model is shown without M20 cable glands or 1/2" NPT conduit connectors.

SITRANS Probe LU, dimensions in mm (inch)

© Siemens AG 2015

Schematics

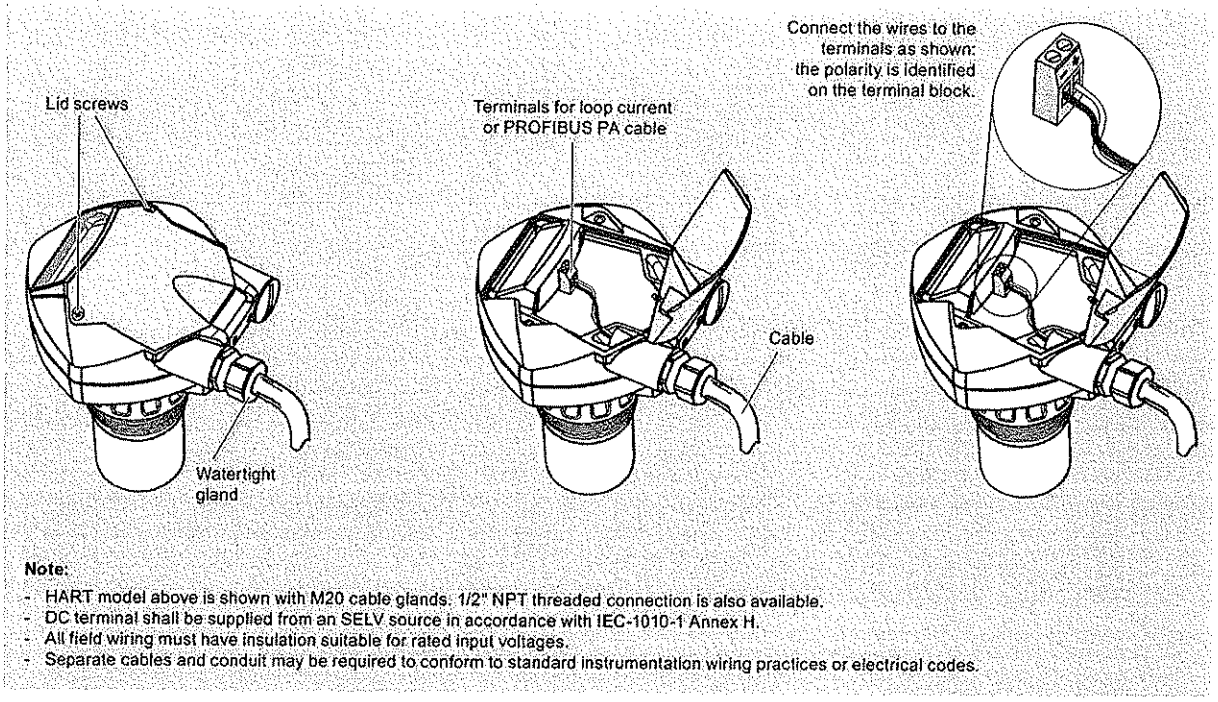

Note:

- HART model above is shown with M20 cable glands. 1/2" NPT threaded connection is also available.
- DC terminal shall be supplied from an SELV source in accordance with IEC-1010-1 Annex H.
- All field wiring must have insulation suitable for rated input voltages.
- Separate cables and conduit may be required to conform to standard instrumentation wiring practices or electrical codes.

SITRANS Probe LU connections

AS950
PORTABLE SAMPLER

Applications

- Wastewater
- Collection systems
- Industrial pretreatment
- Environmental monitoring
- Stormwater

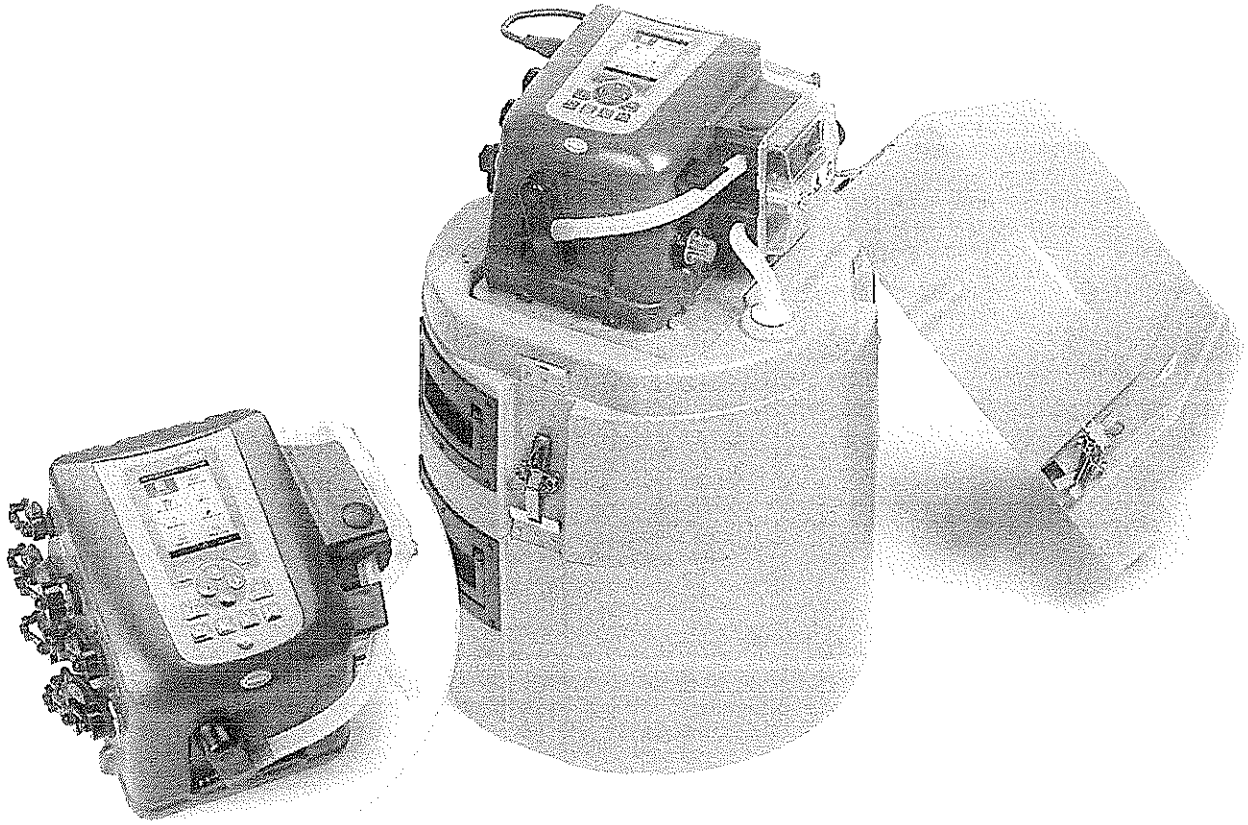

Sampling has never been this easy.

HACH LANGE's AS950 sampler controller makes programming, data transfer and operation more intuitive and error-free.

Easiest and most intuitive operation

The large full colour display and intuitive programming give you access to all your programmable criteria on a single screen – eliminating scrolling through menus and supporting error-free operation.

Most convenient data transfer and programming available

The AS950 is the only sampler that utilises a USB drive to upload and download data and copy programs from one sampler to another.

Confidence in your sampling process

The program status screen instantly communicates alarms, missed samples and program progress for quick and easy trouble-shooting.

Field convertible for compact or discrete sampling

Weighing only 12.7 kg, the AS950 portable sampler is designed for accuracy and convenience. Quickly switch between composite and discrete sampling in the field. Configurable for single or multiple bottle applications, it is specifically designed for use in 18-inch manholes.

Easy maintenance at low cost

Spring-mounted rollers provide long tubing life, keeping maintenance costs low. The desiccant and pump tubing can easily be accessed; the replacement is possible without any tools. The rugged see-through pump cover is made for a quick visual inspection.

3/12/18

HACH LANGE

Technical Data*

AS950 Portable Sampler

Housing material	Impact resistant ABS plastic, 3-section construction Double-walled base with 2.54 cm insulation, direct ice contact with bottles (Sampler)
Temperature	Operating: 0 - 49 °C
	Storage: -40 - 60 °C
Power requirements (Voltage)	12 V DC
Dimensions (W x H x D)	Standard Base: 50.5 cm x 69.4 cm
	Compact Base: 44.1 cm x 61 cm
	Composite Base: 50.28 cm x 79.75 cm
Weight	Standard: 15 kg with (24) 1 L Polyethylene bottles; 14.8 kg with 10 L Polyethylene bottle
	Compact Base: 12.2 kg with (24) 575 mL Polyethylene bottles; 12.9 kg with 10 L Polyethylene bottle
	Composite Base: 15 kg with (1) 21 L Polyethylene bottle

AS950 Controller

Housing material	PC/ABS blend, NEMA 4X, 6, IP68, corrosion and ice resistant (Controller)
Display	1/4 VGA, Colour; self-prompting/ menu-driven program
User interface	Membrane switch keypad with 2 multiple function soft keys
Languages user interface	English, French, Spanish, Italian, German, Portuguese, Chinese
Lock function	Access code protection prevents tampering
Memory	Sample history: 4000 records;
	Data log: 325,000 records;
	Event log: 2000 records
Communication capabilities	USB and optional RS485 (MODBUS)
Inputs	One 0/4-20 mA input for flow pacing
Certifications	CE, UL

Sample container

STANDARD BASE CAPACITY:

(24) 1 L Polyethylene or 350 mL Glass bottles

(8) 2.3 L Polyethylene or 1.9 L Glass bottles

(4) 3.8 L Polyethylene or 3.8 L Glass bottles

(2) 3.8 L Polyethylene or 3.8 L Glass bottles

(1) 21 L Polyethylene composite bottle or

(1) 15 L Polyethylene composite bottle or

(1) 20 L Polyethylene composite bottle or

(1) 10 L Polyethylene or 10 L Glass composite bottle

COMPACT BASE CAPACITY:

(24) 575 mL Polyethylene bottles

(8) 950 mL Glass bottles

(1) 10 L Polyethylene or 10 L Glass bottle

COMPOSITE BASE CAPACITY:

(1) 21 L Polyethylene bottle

ICE CAPACITY:

Compact Base: 3.9 kg with (24) 575 mL PE bottles

Standard Base: 14.5 kg with (24) 350 mL Glass bottles

**Subject to change without notice.*

3/12/18

Technical Data*

Sampling Features

Programs

Dual Programs: Up to 2 sample programs can be run sequentially, in parallel, or according to day of week scheduling; enabling a single sampler to function like multiple samplers

Sampling mode

Pacing: Time weighted, Flow weighted, Time table, Flow table, Event

Distribution: Single bottle composite, multi-bottle composite, multi-bottle discrete, bottles per sample, samples per bottle or a combination of bottles per sample and samples per bottle

Operating mode

Continuous or non-continuous

Status messages

Communicates what program is running, if there are any missed samples, when the next sample will be taken, how many samples remain, number of logged channels, time of last measurement, memory available, number of active channels, if alarms were triggered, when alarms were triggered, active sensors and cabinet temperature

Alarm

Configurable alarms that show on status screen and are recorded in diagnostics alarm logs. Alarms can be set for system diagnostics and logging such as program end, sample complete, missed samples and full bottle. Channel alarms are setpoint alarms for the recorded measurements (channels), such as pH, level and power supply voltage.

Manual sampling

Initiates a sample collection independent of program in progress

Automatic shutdown

Multiple Bottle Mode: After complete revolution of distributor arm (unless Continuous Mode is selected)

Composite Mode: After preset number of samples have been delivered to composite container, from 1 to 999 samples, or upon full container.

Sample volume

Programmable in 10 mL increments from 10 to 10,000 mL

Sample interval

Selectable in single increments from 1 to 9999 flow pulses or 1 to 9999 minutes in one minute increments

Sample trigger

When equipped with flow sensor or pH/temperature sensor or peripheral monitoring options, sampling can be triggered upon an upset condition when field selectable limits are exceeded

Data logging

SAMPLE HISTORY - Stores up to 4000 entries for sample time stamp, bottle number and sample status (success, bottle full, rinse error, user abort, distributor error, pump fault, purge fail, sample timeout, power fail and low main battery).

MEASUREMENTS - Stores up to 325,000 entries for selected measurement channels in accordance with the selected logging interval.

EVENTS - Ability to store up to 2000 entries in Sample History logging. Records Power On, Power Fail, Firmware Updated, Pump Fault, Distributor Arm Error, Low Memory Battery, Low Main Battery, User On, User Off, Program Started, Program Resumed, Program Halted, Program Completed, Grab Sample, Tube Change Required, Sensor Communication Errors, Cooling Failed, Heating Failed, Thermal Error Corrected.

Diagnostics

View event and alarm logs as well as maintenance diagnostics

**Subject to change without notice.*

3/12/18

Technical Data*

Sample Pump and Strainer

Sample pump

High-speed peristaltic, dual roller, with 0.95 ID x 1.6 OD cm (3/8" ID x 5/8" OD) pump tube;

Pump body IP37, Polycarbonate cover

Vertical lift

8.5 m using 8.8 m maximum of 3/8" Vinyl intake tube at sea level at 20 to 25 °C

Tubing

Pump tubing: 9.5 mm ID x 15.9 mm OD Silicone

Intake tubing: 1.0 - 4.75 m minimum length, 1/4" or 3/8" ID Vinyl or 3/8" ID Teflon-lined Polyethylene with protective outer cover (black or clear)

Sample volume repeatability

Typical: ±5% of 200 mL sample volume with: 4.6 m vertical lift, 4.9 m of 3/8" Vinyl intake tube, single bottle, full bottle shut-off at room temperature and 1524 m elevation

Sample volume accuracy

Typical: ±5% of 200 mL sample volume with: 4.6 m vertical lift, 4.9 m of 3/8" Vinyl intake tube, single bottle, full bottle shut-off at room temperature and 1524 m elevation

Sample transport velocity

0.9 m/s with 4.6 m vertical lift, 4.9 m of 3/8" Vinyl intake tubing, 21 °C and 1524 m elevation

Pump flow rate

4.8 L/min at 1 m vertical lift with 3/8" intake tube typical

Internal clock

±1 second per day at 25 °C

Intake

Strainers: Choice of Teflon and 316 Stainless Steel construction, or all 316 Stainless Steel in standard size, high velocity, and low profile for shallow depth applications

Purge: Air purged automatically before and after each sample; duration automatically compensates for varying intake line lengths

Rinse: Intake line automatically rinsed with source liquid prior to each sample, from 1 to 3 rinses

Retries or Fault: Sample collection cycle automatically repeated from 1 to 3 times if sample not obtained on initial attempt

Subject to change without notice.

Dimensions

The AS950 Portable Sampler is designed for indoor or outdoor use. No secondary enclosure is required when operated within the specified temperature range. The sampler consists of three main sections - the top cover, the center control system, and the bottle/base section held together by Stainless Steel latches which serve as the connection point for the optional suspension harness. The lockable top cover protects the controller from extreme weather and unauthorized use.

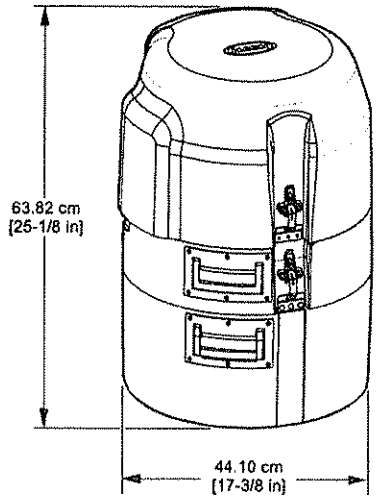

Compact Base

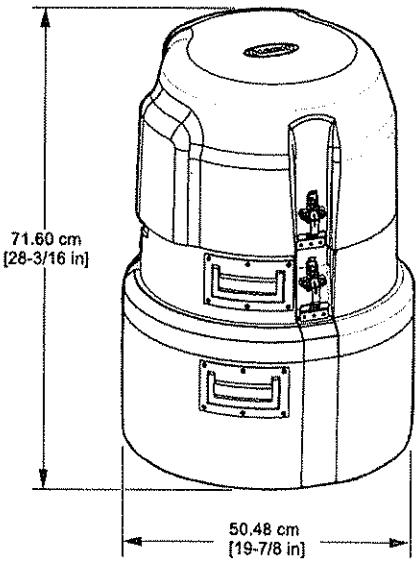

Standard Base

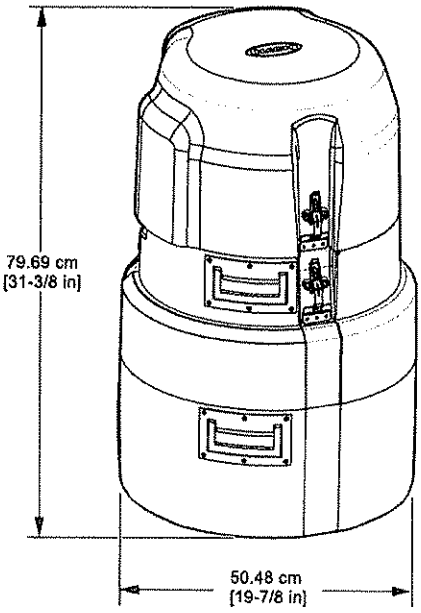

Composite Base

Order Information

ASP.XXXXXXXXXX	AS950 Portable Sampler Portable Sampler with AS950 Controller, available in various configurations and with several factory installed options. Please contact HACH LANGE for more information.

Controller and Base Options

8975	Compact insulated base for AS950 Portable Sampler
8976	Standard insulated base for AS950 Portable Sampler
8561	Composite insulated base for AS950 Portable Sampler

Bottle Options and Accessories

1918	10 L Polyethylene bottle, with cap
6494	20 L Polyethylene bottle, with cap
737	Set of (24) 1 L Polyethylene bottles, with caps
1369	Set of (24) 575 mL Polyethylene bottles, with caps
2348	Set of (8) 950 mL Glass bottles, with Teflon-lined caps
2189	Retainer for (24) 350 mL Glass bottles
1422	Retainer for (8) 1.9 L Glass / (8) 2.3 Polyethylene bottles or (24) 350 mL Glass / (24) 575 mL Polyethylene bottles
2347	Retainer for (8) 950 mL Glass bottles
1502	Container support
8996	Retainer/full container shut-off

Distributors

8582	Distributor with arm for 24 bottle standard base and 12 bottle compact base
8580	Distributor with arm for 24 bottle compact base
8584	Distributor with arm for 2, 4 and 8 bottle standard base and 8 bottle compact base

Tubing and Strainers

920	7 m Vinyl intake tubing, 3/8" ID
922	7 m Teflon-lined Polyethylene tubing, 3/8" ID (requires Connection Kit 2186)
926	Strainer, Teflon/Stainless Steel
2070	Strainer, 316 Stainless Steel
2071	Strainer, for shallow depth applications, 316 Stainless Steel
2186	Connector Kit, for Teflon-lined Polyethylene tubing
4652	Strainer, high velocity and shallow depth
4600-15	Pump tubing, 4.5 m
4600-50	Pump tubing, 15 m
8964	Pump tube insert
9501400	Pump tube insert, non-contact liquid detect

Factory Installed Options

TWO SENSOR PORTS
Accepts HACH LANGE digital Differential pH, HACH LANGE digital AV9000 analyser with submerged area velocity flow and/or HACH LANGE digital US9000 ultrasonic level sensors

RAIN/RS485 PORT
Accepts HACH LANGE Rain Gauge (not included) or can be used as RS485 communications

NON-CONTACT LIQUID DETECT
Sample volume accuracy for applications that require complete tubing replacement

Please contact your local HACH LANGE representative for details.

Inputs/Outputs

9494500	IO9001 Module (connects through auxiliary port), includes 1 relay (high voltage)
9494600	IO9004 Module (connects through auxiliary port), includes multiple 0/4-20 mA outputs and inputs

Accessories

1355	Suspension harness (suspends the sampler)
9542	Manhole support bracket/spanner, 18 to 28 inches
9557	Manhole support bracket/spanner, 28 to 48 inches
5713000	Manhole support bracket, 18 to 27 inches
6987	Weatherguard fiberglass enclosure, 89 cm x 89 cm x 86 cm
6992	Weatherguard fiberglass enclosure, 91 cm x 66 cm x 135 cm
8713200	Solar Module, with 10 W panel and 12 VDC regulator
8754400	12 V Lead Acid battery with 3 pin connector
8753500EU	EU Charger, Lead Acid, 3 pin, 230 V
8754500EU	Power supply, 3 pin connector, 230 V, EU plug
9504700EU	USB cable, A to A (EU)

DOC053.52.35023.Jan15

3/12/18

3/12/18

3. PUMPING STATION

3/12/18

KARKANIAS
ENVIRONMENTAL TECHNOLOGY S.A.

CHANNEL PENSTOCKS

Manufacturer General Specifications

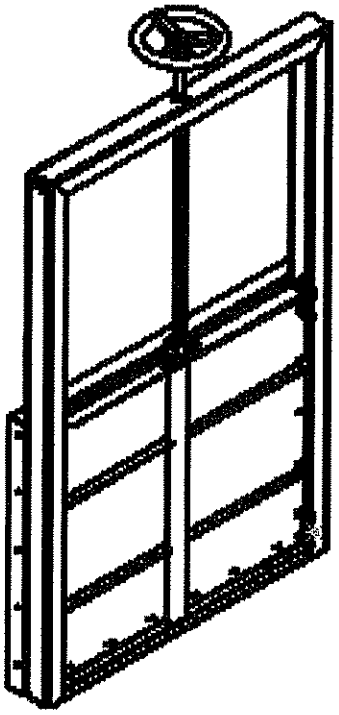

General description

Channel penstocks are 3-sided sealing gates manufactured in square and rectangular dimensions, together with a wide range of trim levels and designs to suit a variety of applications. Operation is achieved manually by means of a hand wheel, electrically or pneumatically by actuators. Mounting options can be mainly on face wall or alternatively embedded in concrete inside channels. The whole structure is made of stainless steel grade 304L for higher corrosion resistance.

HEADQUARTERS:
Industrial Area of Larisa
Postal Code 41004, BOX 3053 Greece
www.karkanias.gr

Phone: +30 2410 541386
Fax: +30 2410 541354
Email: info@karkanias.gr

3/12/18

KARKANIAS
ENVIRONMENTAL TECHNOLOGY S.A.

Construction

- **Frame**: welded stainless steel
- **Frame seals**: parallel resilient EPDM seals bonded to frame sides
- **Door**: stainless steel with reinforcement angles if required
- **Guide system**: stainless steel and PTFE
- **Spindle nut**: zinc-free bronze
- **Spindle drive unit**: stainless steel with trapezoidal thread
- **Operation**: manually or electric with actuator Explosion-Proof II 2 G EExe II T3
- **Dimensions**: upon request

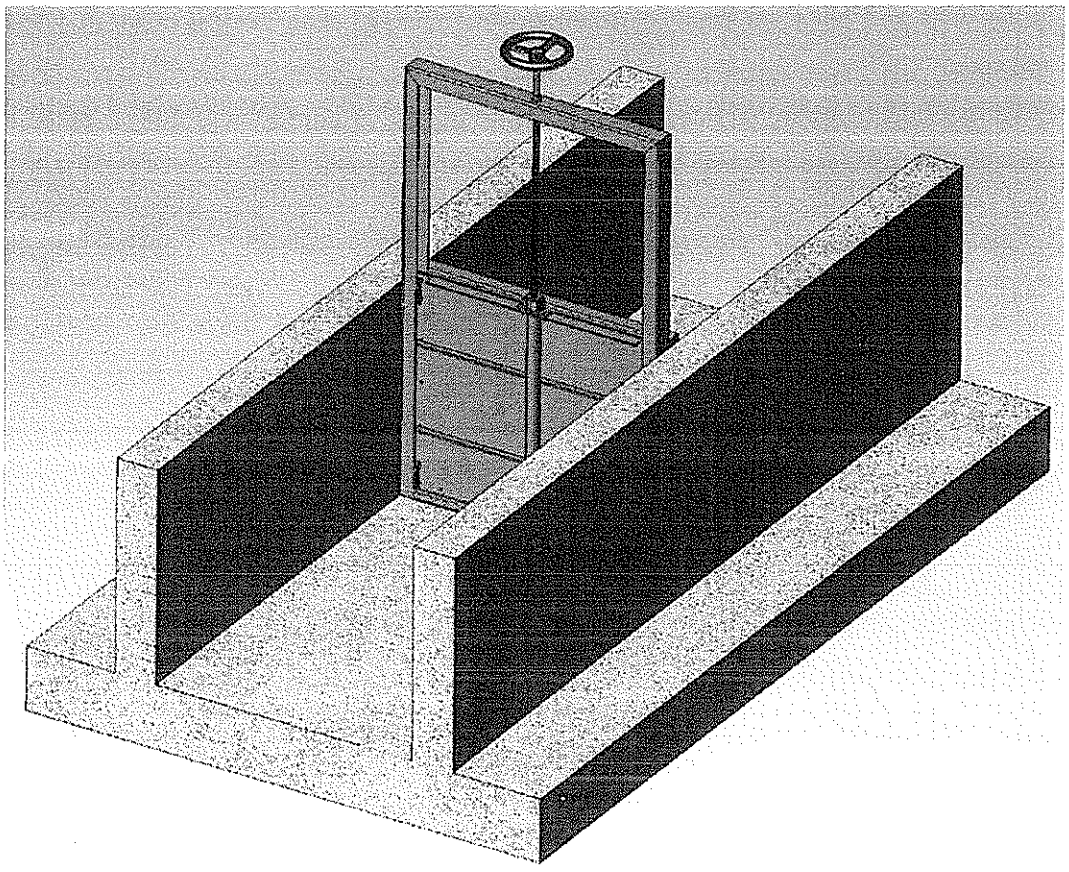

HEADQUARTERS:
Industrial Area of Larisa
Postal Code 41004, BOX 3053 Greece
www.karkanias.gr

Phone: +30 2410 541386
Fax: +30 2410 541354
Email: info@karkanias.gr

3/12/18

KARKANIAS
ENVIRONMENTAL TECHNOLOGY S.A.

Design

Channel penstocks frame is welded stainless steel shaped in U-profile and is suitable for mounting by grouting or by wall mounting at the end or into an open channel. Each penstock is provided with a suitable handwheel of adequate diameter for the duty required. Gearing is supplied where is necessary to ensure that the required operating force applied by hand to the rim of the wheel does not exceed 200 N. Instead of handwheel an electric actuator can be applied. The height of the handing is approximately 1.0 m above the operating level.

Penstocks are of non-rising stem and operation is achieved by a spindle. Spindle's thread form is trapezoidal and direction of closing is clockwise. On the door is fixed the spindle nut which is made of zinc-free bronze. The door is equipped with reinforced ribs in order to withstand the applied pressure load.

Fixing nuts and bolts are made of stainless steel material with grade similar to whole structure.

Penstocks shall be water-tight under the conditions of head and direction of flow as stated in the appropriate Clause or Schedule of the Particular Specification.

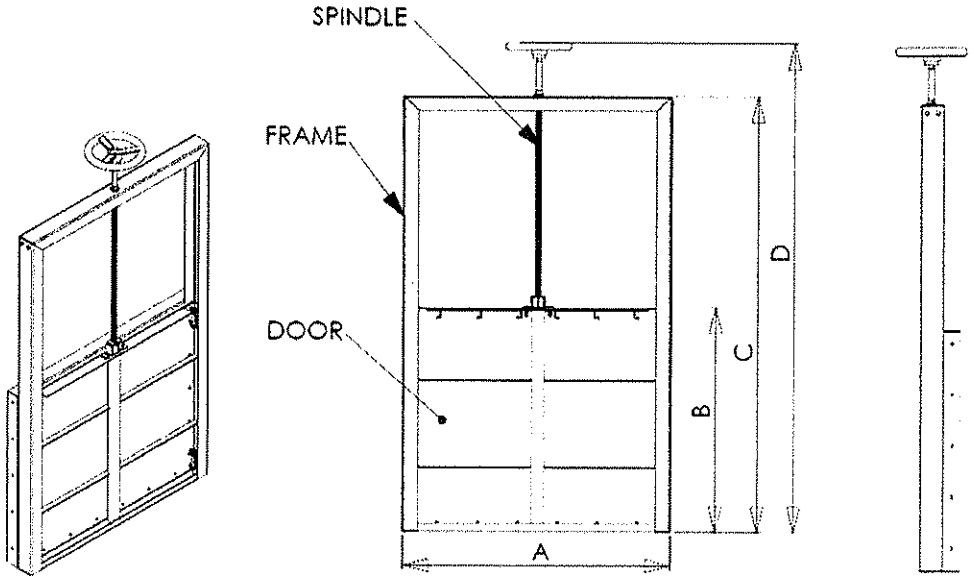

A=CHANNEL WIDTH
B=CHANNEL DEPTH
C=FRAME HEIGHT
D=WHEEL HEIGHT

HEADQUARTERS:
Industrial Area of Larisa
Postal Code 41004, BOX 3053 Greece
www.karkanias.gr

Phone: +30 2410 541386
Fax: +30 2410 541354
Email: info@karkanias.gr

3/12/18

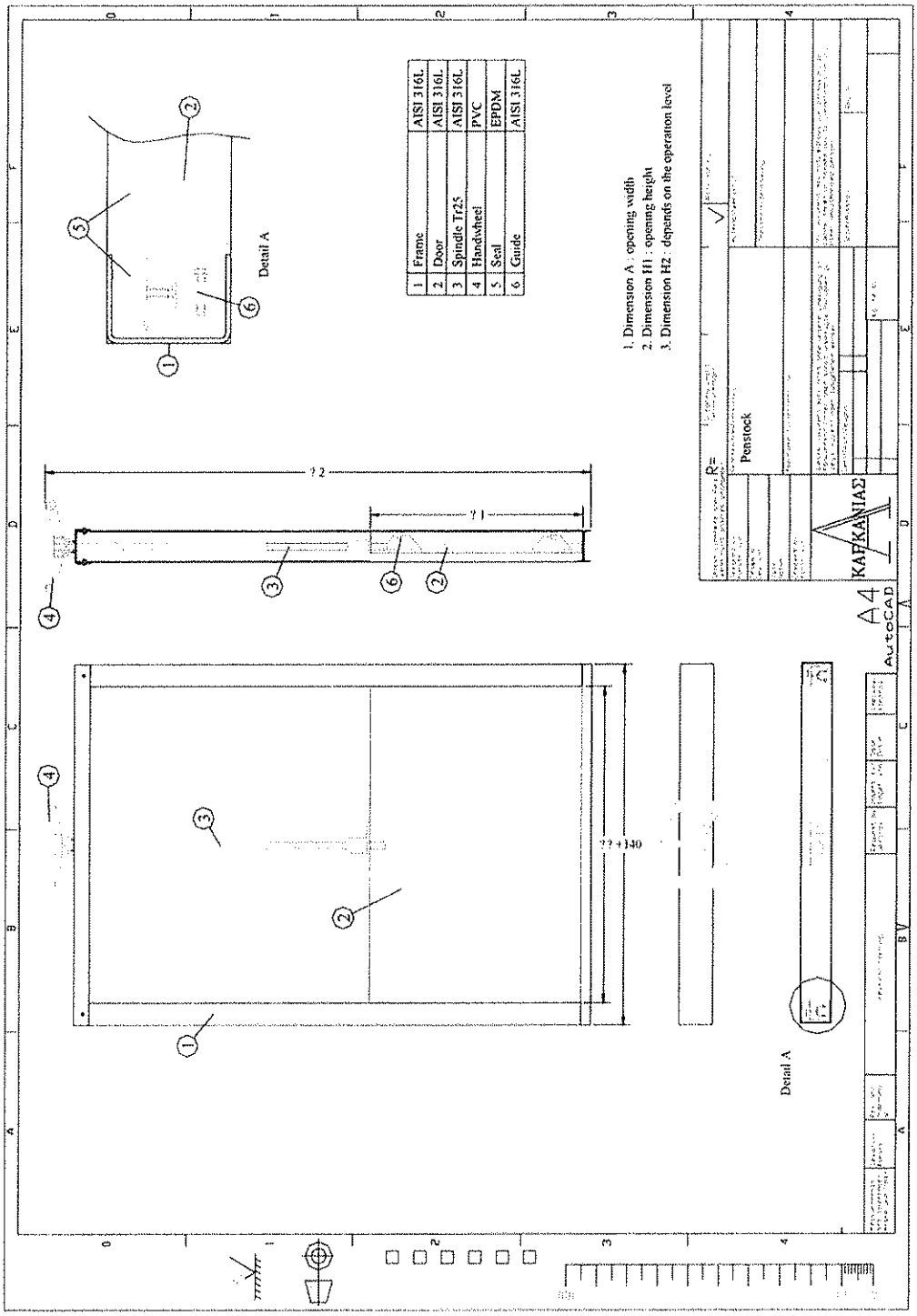

HEADQUARTERS:
Industrial Area of Larisa
Postal Code 41004, BOX 3053 Greece
www.karkanias.gr

Phone: +30 2410 541386
Fax: +30 2410 541354
Email: info@karkanias.gr

3/12/18

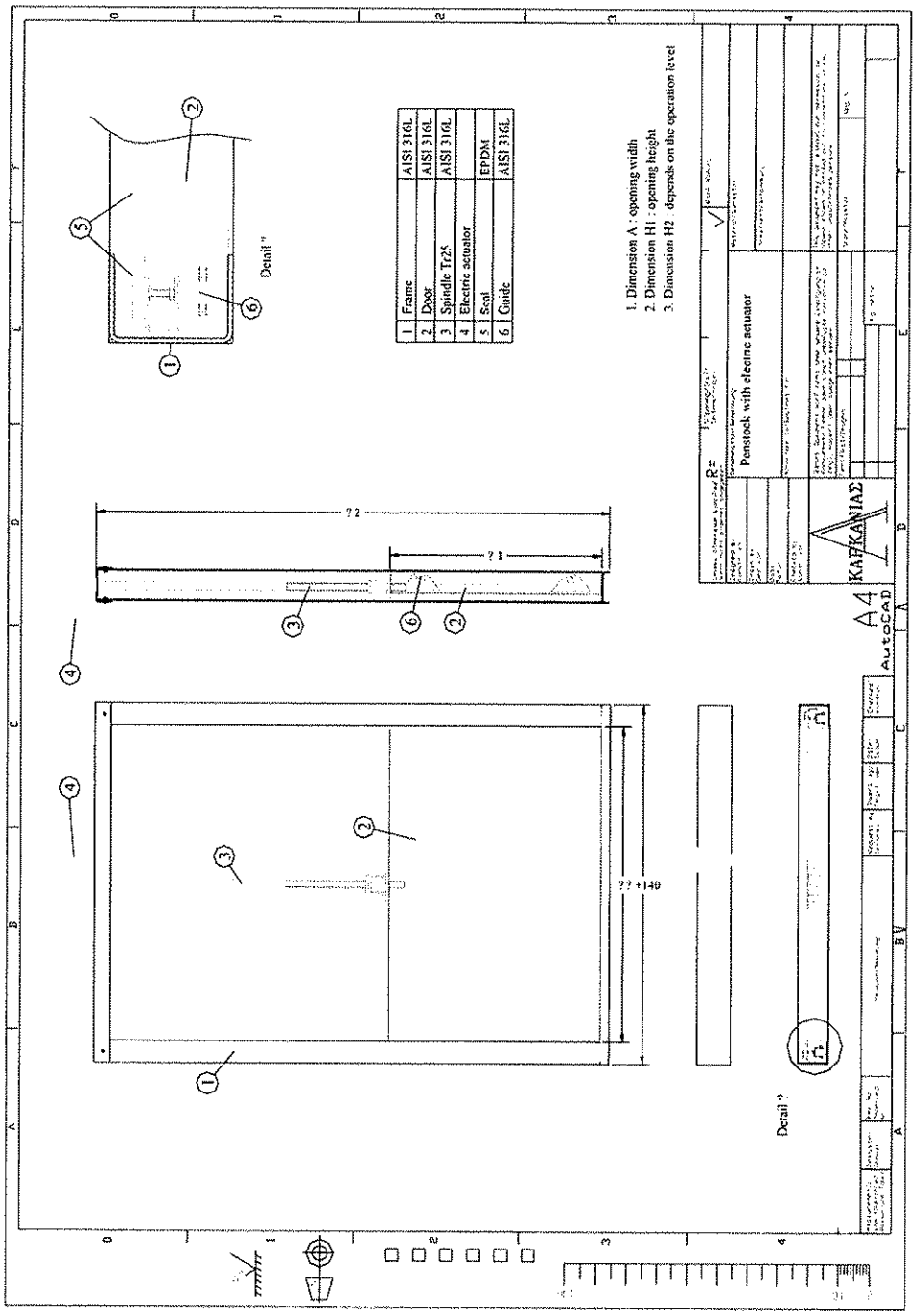

1	Frame	AISI 316L
2	Door	AISI 316L
3	Spindle Tr25	AISI 316L
4	Electric actuator	
5	Seal	EPDM
6	Guide	AISI 316L

HEADQUARTERS:
Industrial Area of Larisa
Postal Code 41004, BOX 3053 Greece
www.karkanias.gr

Phone: +30 2410 541386
Fax: +30 2410 541354
Email: info@karkanias.gr

3/12/18

KARKANIAS
ENVIRONMENTAL TECHNOLOGY S.A.

COARSE SCREEN

Manufacturer General Specifications

Technical data:

Bar spacing	:	50 mm
Channel width	:	800 mm
Discharge height	:	7.5 m
Driving unit	:	BONFIGLIOLI RIDUTTORI
Type	:	Explosion-Proof II 2 G EExe II T3.

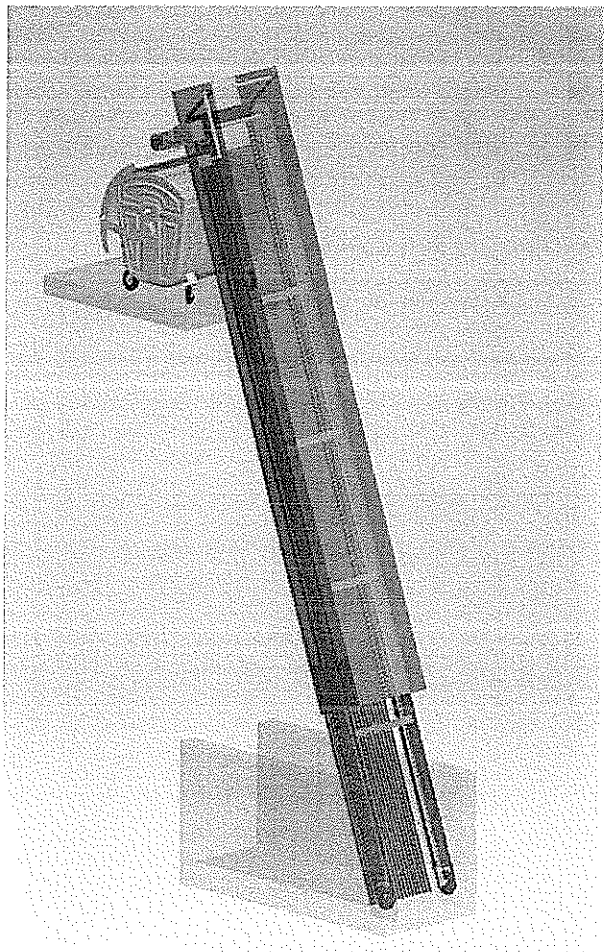

HEADQUARTERS:
Industrial Area of Larisa
Postal Code 41004, BOX 3053 Greece
www.karkanias.gr

Phone: +30 2410 541386
Fax: +30 2410 541354
Email: info@karkanias.gr

3/12/18

KARKANIAS
ENVIRONMENTAL TECHNOLOGY S.A.

Design:

Coarse bar screens are used for the effective screening of wastewater in municipal and industrial wastewater treatment plants. They are intended for installation in pumping stations and treatment plants. The complete structure and all parts in contact with sewage are made of stainless steel AISI 304L, available in different grades upon request.

Bottom part of the structure, immersed in the channel, consists of grid bars with specific span, and a pair of sprockets with drive chains. On the upper part of the screen, the driving system is supplied with electric operation. There are two sprockets attached on each side of the driving shaft, which is driven from the gear motor. Upper sprockets drive chains on which rakes are installed. Through rakes the collected material from the bottom of the channel comes out and falls into the waste container or to a screw dewaterer conveyor.

Sprockets and chains are made from stainless steel material, similar grade to the rest of the structure.

The screen is installed in a suitable angle in order to dewater the screening on its way up to the discharge point.

The coarse screen can be provided completely closed with removable covers upon request, in order to be easily maintained. In this case odor extraction is foreseen. A system for protection against overload is included in standard version.

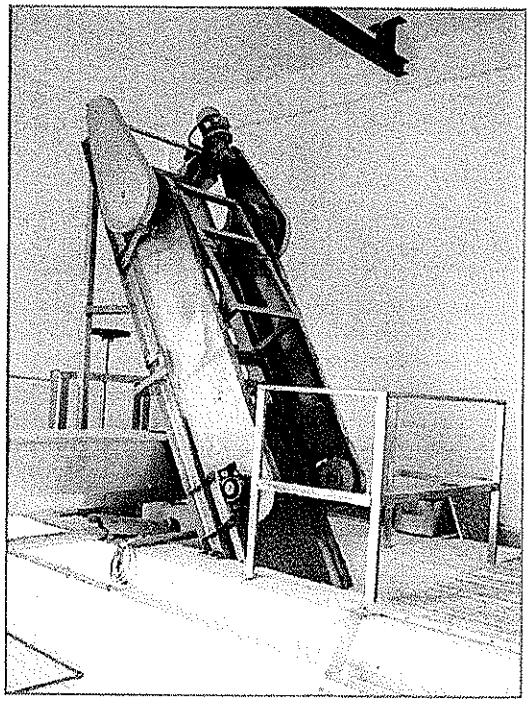

HEADQUARTERS:
Industrial Area of Larisa
Postal Code 41004, BOX 3053 Greece
www.karkanias.gr

Phone: +30 2410 541386
Fax: +30 2410 541354
Email: info@karkanias.gr

3/12/18

KARKANIAS
ENVIRONMENTAL TECHNOLOGY S.A.

HEADQUARTERS:
Industrial Area of Larisa
Postal Code 41004, BOX 3053 Greece
www.karkanias.gr

Phone: +30 2410 541386
Fax: +30 2410 541354
Email: info@karkanias.gr

3/12/18

EKATERINI VASSILIOU
LAWYER
ELEFTHERIAS 17 | TIRNAVOS 40100
LARISSA - GREECE
TEL. +30-24920 24240
LARISSA BAR ASSOCIATION
email: katvas9987@yahoo.gr

012

CERTIFICATE OF REGISTRATION

This is to certify that

KARKANIAS ENVIRONMENTAL TECHNOLOGY S.A.

Industrial Area of Larissa
PC 41004
PO Box 3053
Larissa
Greece

has been audited and found to meet the requirements of standard
ISO 9001:2008 Quality Management System

Scope of certification

General Contractor in Design, Construction, Operation and Maintenance of Water Management Liquid and Solid Wastes Projects in which Hydraulic, Electromechanical, Structural, Industrial, Energy Projects, Roads and Ports Construction are Included.

Karen Prendergast
Sector Director - Certification
Exova BM TRADA

Certificate number: 10096

Issue number: 2017-01

Certificate start date: 19 February 2017

Certificate expiry date: 14 September 2018

Date of initial certification: 19 February 2014

Exova (UK) Ltd. (T/A Exova BM TRADA), Chiltern House, Stocking Lane, High Wycombe, Buckinghamshire, HP14 4ND, UK
Registered Office: Exova (UK) Ltd, Lochend Industrial Estate, Newbridge, Midlothian EH28 8PL United Kingdom. Reg No. SC070429.

This certificate remains the property of Exova (UK) Ltd. This certificate and all copies or reproductions of the certificate shall be returned to Exova (UK) Ltd or destroyed if requested. Further clarification regarding the scope of this certificate and verification of the certificate is available through Exova BM TRADA or at the above address or at www.exovabmtrada.com

The use of the UKAS accreditation mark indicates accreditation in respect of those activities covered by the accreditation certification 012

Multisite clients - The scope of certification shown above includes the participating sites shown in appendix A

3/12/18

EKATERINI VASSILIOU
LAWYER
ELEFTHERIAS 17 - TIRNAVOS 40100
LARISSA - GREECE
TEL. +30 24920 24240
LARISSA BAR ASSOCIATION
email: katvas9987@yahoo.gr

012

CERTIFICATE OF REGISTRATION

This is to certify that

KARKANIAS ENVIRONMENTAL TECHNOLOGY S.A.

Industrial Area of Larissa
PC 41004
PO Box 3053
Larissa
Greece

has been audited and found to meet the requirements of standard
ISO 14001:2004 Environmental Management System

Scope of certification

General Contractor in Design, Construction, Operation and Maintenance of Water Management Liquid and Solid Wastes Projects in which Hydraulic, Electromechanical, Structural, Industrial, Energy Projects, Roads and Ports Construction are Included.

Certificate number: 2377

Issue number: 2017-01

Certificate start date: 19 February 2017

Certificate expiry date: 14 September 2018

Date of initial certification: 19 February 2014

Karen Prendergast
Sector Director - Certification
Exova BM TRADA

Exova (UK) Ltd, (T/A Exova BM TRADA), Chiltern House, Stocking Lane, High Wycombe, Buckinghamshire, HP14 4ND, UK
Registered Office: Exova (UK) Ltd, Lochend Industrial Estate, Newbridge, Midlothian EH28 8PL United Kingdom. Reg No. SC070429.

This certificate remains the property of Exova (UK) Ltd. This certificate and all copies or reproductions of the certificate shall be returned to Exova (UK) Ltd or destroyed if requested. Further clarification regarding the scope of this certificate and verification of the certificate is available through Exova BM TRADA or at the above address or at www.exovabmtrada.com

The use of the UKAS accreditation mark indicates accreditation in respect of those activities covered by the accreditation certification 012

Multisite clients - The scope of certification shown above includes the participating sites shown in appendix A

3/12/18

EKATERINI VASSILIOU
LAWYER
ELEFTHERIAS 17 - TIRNAVOS 40100
LARISSA - GREECE
TEL. +30 24920 24240
LARISSA BAR ASSOCIATION
email: katvas9987@yahoo.gr

012

CERTIFICATE OF REGISTRATION

This is to certify that

KARKANIAS ENVIRONMENTAL TECHNOLOGY S.A.
Industrial Area of Larissa
PC 41004
PO Box 3053
Larissa
Greece

has been audited and found to meet the requirements of standard
OHSAS 18001:2007 Health & Safety Management System

Scope of certification

General Contractor in Design, Construction, Operation and Maintenance of Water Management Liquid and Solid Wastes Projects in which Hydraulic, Electromechanical, Structural, Industrial, Energy Projects, Roads and Ports Construction are included.

Certificate number: 796

Issue number: 2017-01

Certificate start date: 19 February 2017

Certificate expiry date: 18 February 2020

Date of initial certification: 19 February 2014

Karen Prendergast
Sector Director - Certification
Exova BM TRADA

Exova (UK) Ltd. (T/A Exova BM TRADA), Chiltern House, Stocking Lane, High Wycombe, Buckinghamshire, HP14 4ND, UK
Registered Office: Exova (UK) Ltd, Lochend Industrial Estate, Newbridge, Midlothian EH28 8PL United Kingdom. Reg No. SC070429.

This certificate remains the property of Exova (UK) Ltd. This certificate and all copies or reproductions of the certificate shall be returned to Exova (UK) Ltd or destroyed if requested. Further clarification regarding the scope of this certificate and verification of the certificate is available through Exova BM TRADA or at the above address or at www.exovabmtrada.com

The use of the UKAS accreditation mark indicates accreditation in respect of those activities covered by the accreditation certification 012

Multisite clients - The scope of certification shown above includes the participating sites shown in appendix A

3/12/18

KARKANIAS
ENVIRONMENTAL TECHNOLOGY S.A.

STATIC SCREEN

Manufacturer General Specifications

Technical data:

Screen material	: AISI 304L
Screen width	: 800 mm
Openings width	: 50 mm

The manually cleaned static screen is used mainly in bypass channels. It is constructed by stainless steel rectangular bars 8 x 20 mm placed in vertical position with suitable space for holding solids. The vertical bars at the bottom and top of them are fastened by transverse bars, which are of the same material and same profile dimension.

The structure comprises special brackets which hold the static screen at an inclined position (angle of 70° approx.). Brackets are also corrosion-resistant with similar material to the static screen.

The construction is accompanied by a stainless steel perforated bin, which is used for collection of screenings, and a rake for removing screenings from the vertical bars of the screen.

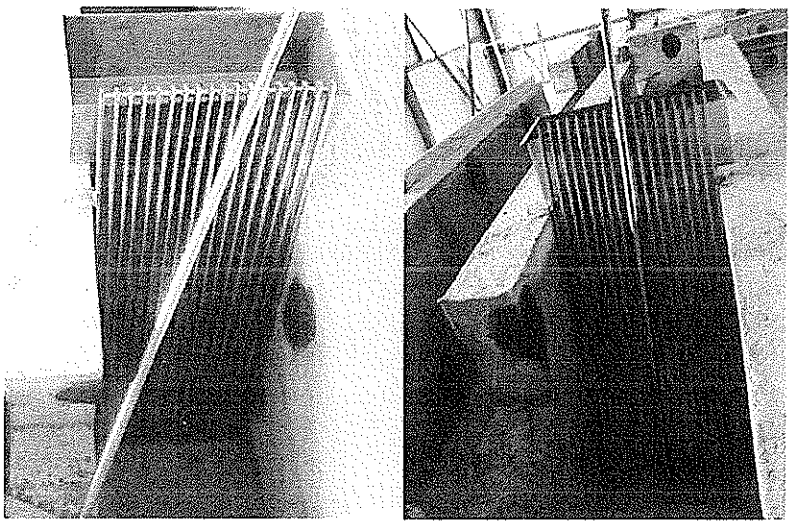

HEADQUARTERS:
Industrial Area of Larisa
Postal Code 41004, BOX 3053 Greece
www.karkanias.gr

Phone: +30 2410 541386
Fax: +30 2410 541354
Email: info@karkanias.gr

3/12/18

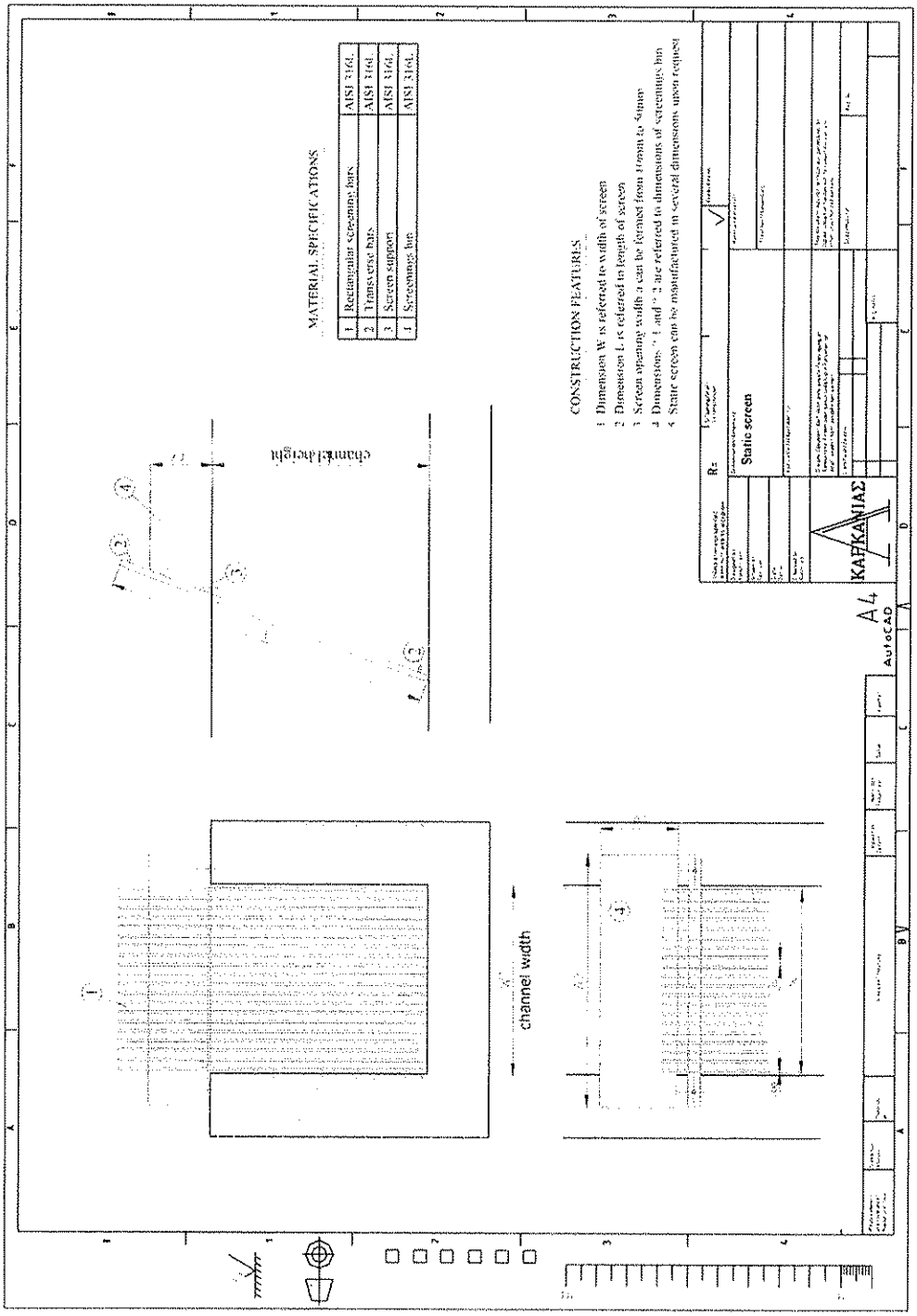

HEADQUARTERS:
Industrial Area of Larisa
Postal Code 41004, BOX 3053 Greece
www.karkanias.gr

Phone: +30 2410 541386
Fax: +30 2410 541354
Email: info@karkanias.gr

3/12/18

KARKANIAS
ENVIRONMENTAL TECHNOLOGY S.A.

SCREW DEWATERER CONVEYOR

Manufacturer General Specifications

Technical data:

Screw length	:	As specified
Spiral diameter	:	300 mm
Spiral cross section	:	20 x 50 mm
Driving unit	:	BONFIGLIOLI RIDUTTORI
Type	:	II 2 G EExe II T3

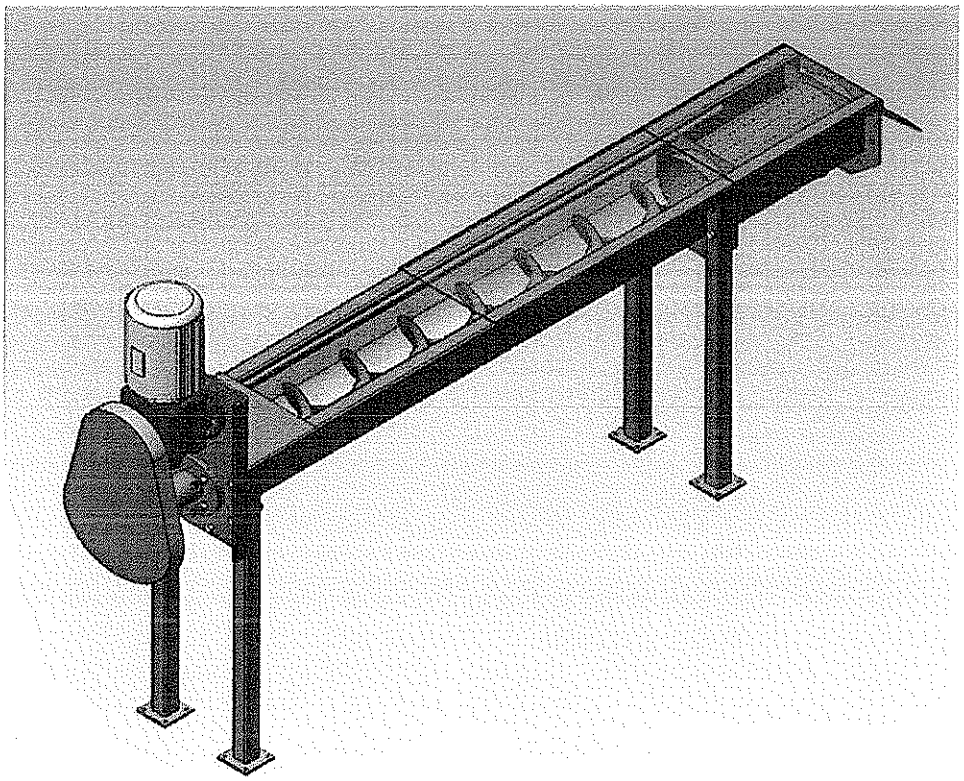

HEADQUARTERS:
Industrial Area of Larisa
Postal Code 41004, BOX 3053 Greece
www.karkanias.gr

Phone: +30 2410 541386
Fax: +30 2410 541354
Email: info@karkanias.gr

3/12/18

KARKANIAS
ENVIRONMENTAL TECHNOLOGY S.A.

Design

The entire screw conveyor is made of stainless steel grade 304L. It consists of a shaftless spiral surrounded by a trough. Between the spiral and the trough is installed appropriate plastic material (Teflon) in order to eliminate friction. The spiral is protected by covers, attached on the trough by means of fastening screws so it can be easily cleaned and maintained. Suitable number of hoppers is installed in order to receive screenings from coarse screens.

The driving unit is connected at the one end of the screw conveyor through a drive shaft which is equipped with double sealing flange. At the other end the compacting chamber is assembled. Compaction is achieved by the mean of a barrier steel plate. Compression plate works as an obstacle during screenings transfer so they can be compressed and free of condensate before discharge to the skip. Drainage water is drained off into a collecting pipe, which will be driven to the drainage system of the plant.

The screw conveyor can be manufactured in alternative stainless steel grade upon costumer request.

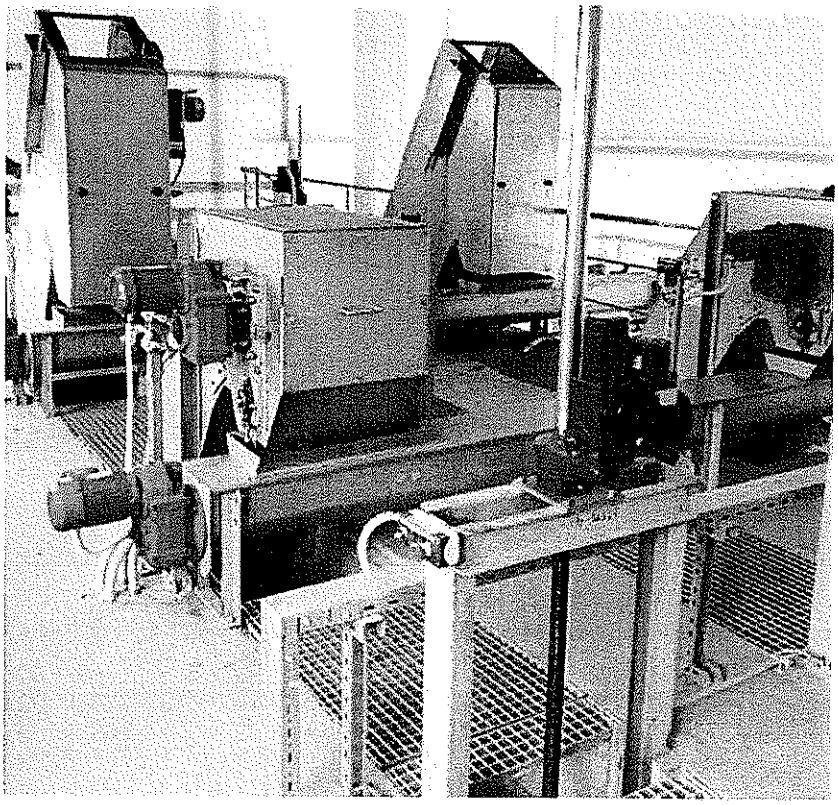

HEADQUARTERS:
Industrial Area of Larisa
Postal Code 41004, BOX 3053 Greece
www.karkanias.gr

Phone: +30 2410 541386
Fax: +30 2410 541354
Email: info@karkanias.gr

3/12/18

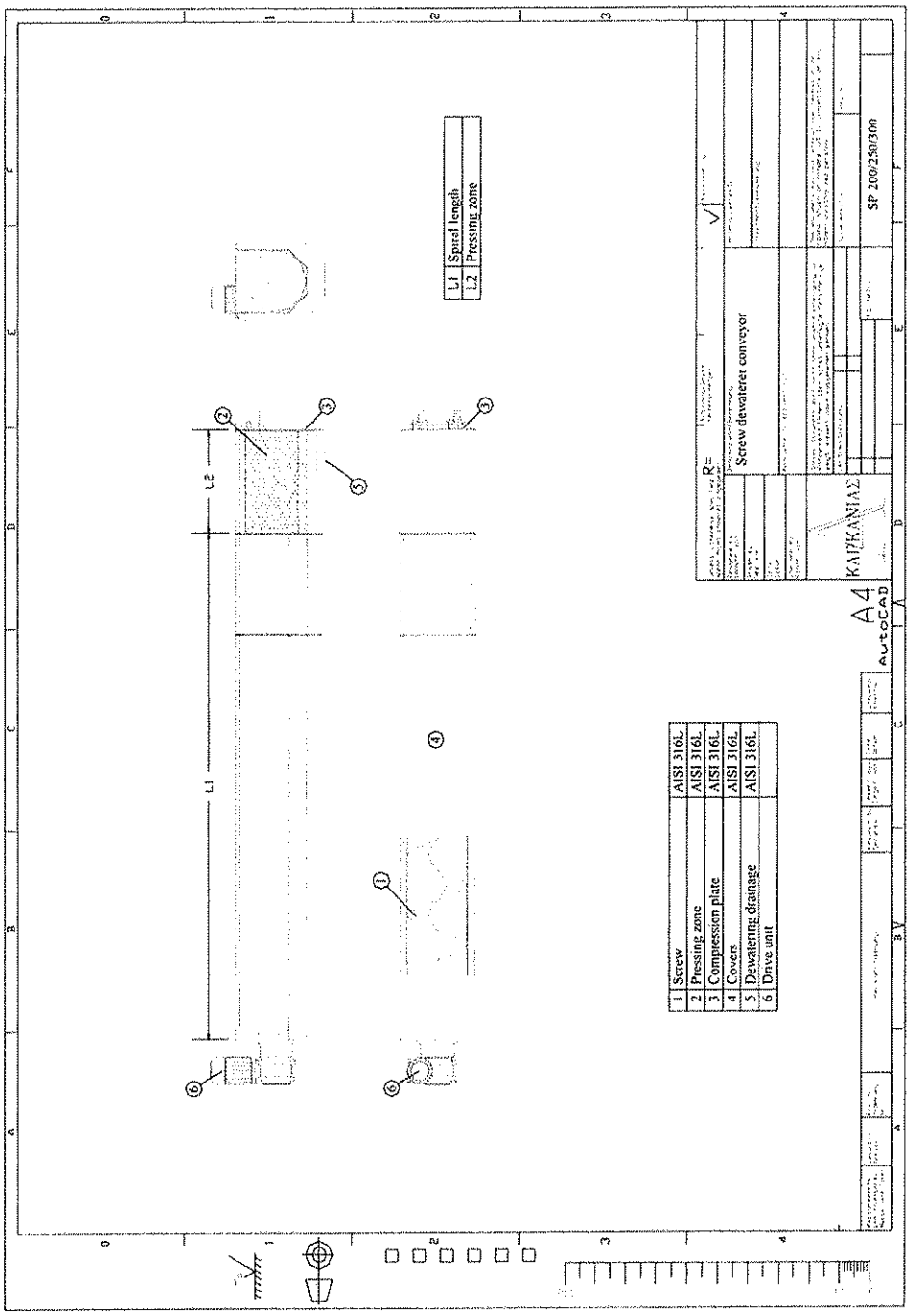

HEADQUARTERS:
Industrial Area of Larisa
Postal Code 41004, BOX 3053 Greece
www.karkanias.gr

Phone: +30 2410 541386
Fax: +30 2410 541354
Email: info@karkanias.gr

3/12/18

© Siemens AG 2016

Level Measurement

Continuous level measurement - Ultrasonic controllers

MultiRanger 200 HMI

Overview

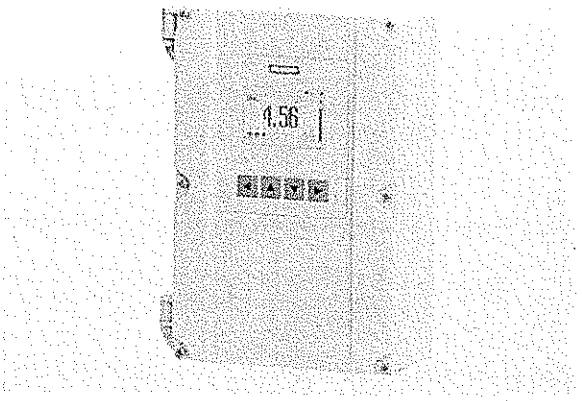

MultiRanger 200 HMI is a versatile short to medium-range ultrasonic single and multi-vessel level monitor/controller for virtually any application in a wide range of industries.

Benefits

- Easy to use HMI display with local four-button programming, menu-driven parameters, and Wizard support for key applications
- English, German, French, Spanish, Chinese, Italian, Portuguese, and Russian texts on the HMI
- Removable terminal blocks for ease of wiring
- Digital input for back-up level override from point level device
- Communication using built-in Modbus RTU via RS 485 and SIMATIC PDM configuration software
- Compatible with SmartLinx system: PROFIBUS DP (cyclic access of process values only) and DeviceNET
- Single or dual point level monitoring
- Auto False-Echo Suppression for fixed obstruction avoidance
- Differential amplifier transceiver for common mode noise reduction and improved signal-to-noise ratio
- Level, volume, and flow measurements in open channels, differential control, extended pump control, and alarm functions
- Wall and panel mounting options

Application

MultiRanger 200 HMI can be used with various materials, including, water, municipal waste, acids, woodchips, or on materials with high angles of repose. MultiRanger 200 HMI offers true dual point monitoring, digital communications with built-in Modbus RTU via RS 485, as well as compatibility with SIMATIC PDM, allowing PC configuration and set-up. MultiRanger 200 HMI features Sonic Intelligence advanced echo-processing software for increased reading reliability.

MultiRanger 200 HMI will monitor open channel flow and features more advanced relay alarming and pump control functions as well as volume conversion.

It is compatible with chemical-resistant EchoMax transducers that are approved for hostile environments.

- Key Applications: wet wells, flumes/weirs, bar screen control, hoppers, chemical storage, liquid storage, crusher bins, dry solids storage

Design

The MultiRanger 200 HMI is available in wall or panel mounting options.

© Siemens AG 2016

Technical specifications

Mode of Operation	
Measuring principle	Ultrasonic level measurement
Measuring range	0.3 ... 15 m (1 ... 50 ft)
Measuring points	1 or 2
Input	
Analog	0 ... 20 mA or 4 ... 20 mA, from alternate device, scalable
Discrete	10 ... 50 V DC switching level Logical 0 ≤ 0.5 V DC Logical 1 = 10 . 50 V DC max. 3 mA
Output	
EchoMax transducer	44 kHz
Ultrasonic transducer	Compatible transducers: ST-H and EchoMax series XPS-10, XPS-15/15F, and XRS-5
Relays	Rating 5 A at 250 V AC, non-inductive
mA output	0 ... 20 mA or 4 ... 20 mA
• Max. load	750 Ω, isolated
• Resolution	0.1 % of range
Accuracy	
Error in measurement	0.25 % of range or 6 mm (0.24 inch), whichever is greater
Resolution	0.1 % of measuring range[1] or 2 mm (0.08 inch), whichever is greater
Temperature compensation	• -50 ... +150 °C (-58 ... +302 °F) • Integral temperature sensor • External TS-3 temperature sensor (optional) • Programmable fixed temperature values
Rated operating conditions	
Installation conditions	
• Location	Indoor/outdoor
• Installation category	II
• Pollution degree	4
Ambient conditions	
• Ambient temperature (housing)	-20 ... +50 °C (-4 ... +122 °F)

Design	
Weight	
• Wall mount	1.22 kg (2.68 lb)
• Panel mount	1.35 kg (2.97 lb)
Material (enclosure)	Polycarbonate
Degree of protection (enclosure)	
• Wall mount	IP65/Type 4X/NEMA 4X
• Panel mount	IP54/Type 3/NEMA 3
Electrical connection	
• Transducer and mA output signal	2-core copper conductor, twisted, shielded, 0.5 ... 0.75 mm² (22 ... 18 AWG), Belden 8760 or equivalent is acceptable
• Max. separation between transducer and transceiver	365 m (1 200 ft)
Displays and controls	60 x 40 mm (2.36 x 1.57 inch) LCD 240 x 160 pixels resolution
Power supply	
AC version	100 ... 230 V AC ± 15 %, 50/60 Hz, 36 VA (17 W)
DC version	12 ... 30 V DC (20 W)
Certificates and approvals	• CE, RCM[2] • FM, $CSA_{US/C}$, UL • CSA Class I, Div. 2, Groups A, B, C, and D, Class II, Div. 2, Groups F and G, Class III (wall mount only)
Communication	• RS 232 with Modbus RTU or ASCII via RJ-11 connector • RS 485 with Modbus RTU or ASCII via terminal strips • Optional: SmartLinx cards for - PROFIBUS DPV1 (cyclic access of process values only) - DeviceNet

[1] Program range is defined as the empty distance to the face of the transducer plus any range extension
[2] EMC performance available on request

© Siemens AG 2016

Level Measurement

Continuous level measurement - Ultrasonic controllers

MultiRanger 200 HMI

Selection and Ordering data	Article No.
MultiRanger 200 HMI Versatile short to medium-range ultrasonic single and multi-vessel level monitor/controller for virtually any application in a wide range of industries	↗ **7ML5033-**
↗ Click on the Article No. for the online configuration in the PIA Life Cycle Portal.	
Versions	
MultiRanger 200, level, volume, flow, and differential measurements	**2**
Mounting, enclosure design	
4 button HMI, Wall mount, standard enclosure	**D**
4 button HMI, Wall mount, 4 entries, 4 M20 cable glands included	**E**
4 button HMI, Panel Mount	**F**
Input voltage	
100 ... 230 V AC	**A**
12 ... 30 V DC	**B**
Number of measurement points	
Single point version	**0**
Dual point version	**1**
Data communications (SmartLinx)	
Without module	**0**
SmartLinx PROFIBUS DPV0 module	**2**
SmartLinx DeviceNet module	**3**
SmartLinx PROFIBUS DPV1 module	**4**
See SmartLinx product page 4/374 for more information.	
Output relays	
6 relays (4 Form A, 2 Form C), 250 V AC	**2**
Approvals	
General Purpose CE, FM, $CSA_{us/c}$, UL listed, RCM	**A**
CSA Class I, Div. 2, Groups A, B, C, and D; Class II, Div. 2, Groups F and G; Class III[1]	**B**

[1] Available with Mounting/Enclosure design options D or E

We can offer shorter delivery times for configurations designated with the Quick Ship Symbol . For details see page 9/5 in the appendix.

Selection and Ordering data	Order code
Further designs	
Please add "-Z" to Article No. and specify Order code(s).	
Stainless steel tag (69 x 50 mm (2.71 x 1.97 inch)): Measuring-point number/identification (max. 27 characters) specify in plain text	**Y15**
Test Certificate: Manufacturer's test certificate M to DIN 55350, Part 18 and to ISO 9000	**C11**
Operating Instructions	Article No.
English	**AE535857004**
German	**A5E36182123**
Note: The instruction manual should be ordered as a separate line on the order.	
All literature is available to download for free, in a range of languages, at http://www.siemens.com/processinstrumentationdocumentation	
This device is shipped with the Siemens Level and Weighing manual DVD containing the complete ATEX Quick Start and instruction manual library.	
Other Operating Instructions	
SmartLinx PROFIBUS DPV1, English	**A5E36197302**
SmartLinx PROFIBUS DPV1, German	**A5E36197305**
SmartLinx PROFIBUS DP, English	**7ML1998-1AQ03**
SmartLinx PROFIBUS DP, German	**7ML1998-1AQ33**
SmartLinx DeviceNet, English	**7ML1998-1BH02**
Note: The appropriate SmartLinx Operating Instructions should be ordered as a separate line on the order.	
All literature is available to download for free, in a range of languages, at http://www.siemens.com/processinstrumentationdocumentation	
Optional equipment	
Tag, stainless steel, 12 x 45 mm, one text line, suitable for enclosures	**7ML1930-1AC**
Sun-shield, 304 Stainless steel	**7ML1930-1GA**
USB to RS 232 adapter	**7ML1930-6AK**
RS 232 to RJ11 COMMS adapter	**7ML1830-1MC**
SITRANS RD100, loop powered display - see Chapter 7	**7ML5741-...**
SITRANS RD200, universal input display with Modbus conversion - see Chapter 7	**7ML5740-...**
SITRANS RD300, dual line display with totalizer and linearization curve and Modbus conversion - see Chapter 7	**7ML5744-...**
SITRANS RD500 web, universal remote monitoring solution for instrumentation - see Chapter 7	**7ML5750-...**
Spare parts	
Power Supply Board (100 ... 230 V AC)	**7ML1830-1MD**
Power Supply Board (12 ... 30 V DC)	**7ML1830-1ME**
Spare lid with HMI, MultiRanger 200 HMI/ HydroRanger 200 HMI, wall	**A5E35778738**
Spare lid with HMI, MultiRanger 200 HMI/ HydroRanger 200 HMI, panel	**A5E35778740**
SmartLinx PROFIBUS DP V1 module	**A5E35778741**

We can offer shorter delivery times for configurations designated with the Quick Ship Symbol . For details see page 9/5 in the appendix.

© Siemens AG 2016

Dimensional drawings

Panel mount dimensions

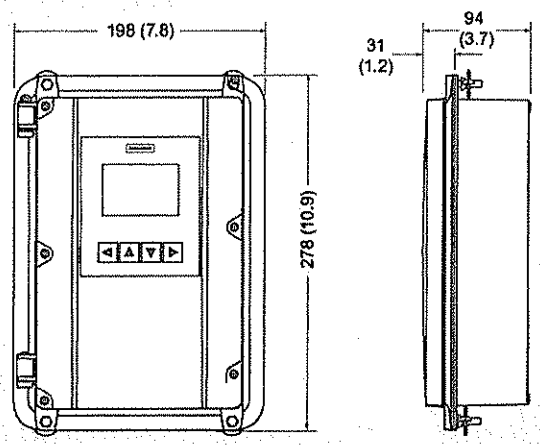

Wall mount dimensions

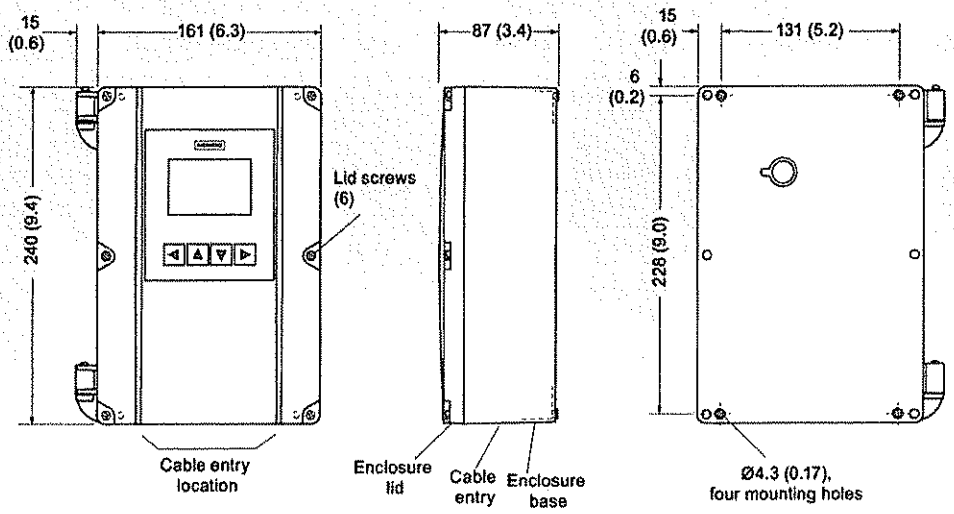

MultiRanger 200 HMI, dimensions in mm (inch)

© Siemens AG 2016

Schematics

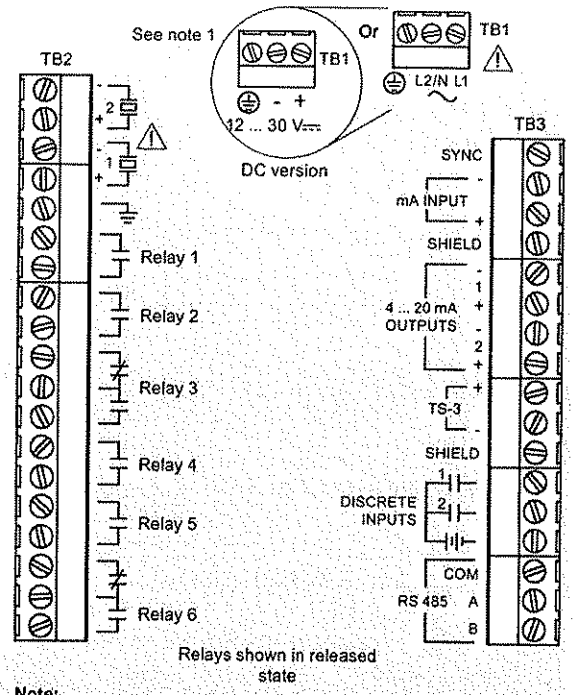

Note:

1. Use 2-core copper wire, twisted, with shield, for expansion up to 365 m (1 200 ft). Route cable in grounded metal conduit, separate from other cables.
2. Verify that all system components are installed in accordance with instructions.
3. Connect all cable shields to the MultiRanger shield connections. Avoid differential ground potentials by not connecting cable shields to ground (earth) anywhere else.
4. Keep exposed conductors on shielded cables as short as possible to reduce noise on the line caused by stray transmissions and noise pickup.

MultiRanger 200 HMI connections

© Siemens AG 2015

Level Measurement

Continuous level measurement - Ultrasonic transducers

Overview

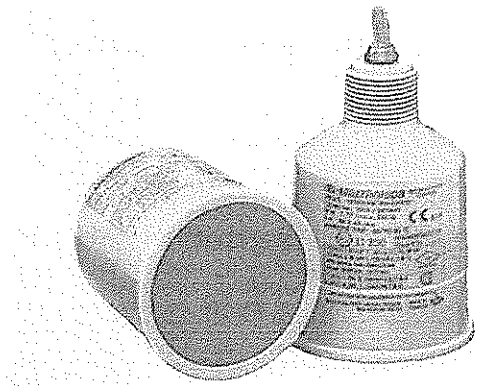

EchoMax XRS-5 ultrasonic transducer provides reliable, continuous level monitoring of liquids and slurries in narrow lift stations/ wet wells, flumes, weirs and filter beds using a beam angle of just 10° and a CSM rubber face.

Benefits

- Narrow beam angle of only 10°
- Chemically resistant PVDF copolymer enclosure and CSM rubber face
- Measuring range: 8 m (26 ft) for measurement of liquids and slurries
- Fully submersible: IP68 degree of protection
- Easy installation with 1" NPT or R 1" BSPT connection

Application

The XRS-5 is non-contacting with a measuring range from 0.3 ... 8 m (1 ... 26 ft). Advanced echo processing ensures reliable data even in conditions with obstructions, turbulence and foam.

The hermetically sealed CSM rubber face and the PVDF copolymer enclosure are designed for maximum resistance to methane, salt water, caustics and harsh chemicals common to wastewater installations. With an IP68 degree of protection, this rugged sensor is fully submersible in the event of flood conditions. Use a submergence shield if full submergence is possible in the application. A submergence shield will maintain a high level reading output during submerged conditions.

The low-cost XRS-5 transducer is compatible with a full range of Siemens controllers, from a basic system for high/low alarm or simple pump control, up to advanced control systems with communications, telemetry and SCADA integration capabilities.

- Key Applications: wet wells, flumes, weirs, filter beds

Technical specifications

Mode of operation	
Measuring principle	Ultrasonic transducer
Input	
Measuring range	0.3 ... 8 m (1 26 ft), dependent on application
Output	
Frequency	44 kHz
Beam angle	10°
Accuracy	
Temperature error	Compensated by integral temperature sensor
Rated operating conditions	
Vessel pressure	Normal atmospheric pressure
Ambient conditions	
• Ambient temperature	-20 ... +65 °C (-4 ... +149 ° F)
Design	
Weight (approximate shipping weight of sensor with standard cable length)	1.2 kg (2.6 lb)
Material (enclosure)	PVDF copolymer enclosure and CSM face
Process connection	1" NPT [(Taper), ANSI/ASME B1.20.1] or R 1" [(BSPT), EN 10226]
Degree of protection	IP65/IP68
Cable connection	2-core shielded/twisted, 0.5 mm^2 (20 AWG), PVC sheath
Cable (max. length)	• 365 m (1 200 ft) with RG 62 A/U coaxial cable • 365 m (1 200 ft) with 2-core twisted pair, foil shield, 0.5 mm^2 (20 AWG), PVC sheath, only for MultiRanger 100/200
Options	
Flange version	Factory flange with PTFE face for ASME, EN or JIS configuration
Submergence shield	For applications with flooding possible
Certificates and approvals	CE, RCM, KCC CSA Class I, Div. 2, Groups A,B,C,D, Class II, Div. 1 Groups E,F,G FM Class I, Zone 1, AEx m IIC, T6 Class II, III, Div. 1, Groups E,F,G T6 ATEX II 2GD / IECEx / INMETRO Ex mb IIC T6 Gb, Ex tb IIIC T85 °C Db

3/12/18

© Siemens AG 2015

Selection and Ordering data		Article No.
EchoMax XRS-5 transducer	↗	**7ML1106-**
With a beam angle of 10°, the XRS-5 provides reliable, continuous level monitoring of liquids and slurries in narrow lift stations/wet wells, flumes, weirs and filter beds. Measuring range: min. 0.3 m (1 ft), max. 8 m (26 ft)		**0 - 0**
↗ Click on the Article No. for the online configuration in the PIA Life Cycle Portal.		
Process connection		
1" NPT [(Taper), ANSI/ASME B1.20.1]	✧	**1**
R 1" [(BSPT), EN 10226]	✧	**2**
Cable length		
5 m (16.40 ft)	✧	**A**
10 m (32.81 ft)	✧	**B**
30 m (98.43 ft)		**C**
Facing		
Standard (CSM rubber)	✧	**A**
PTFE (flange versions)		**B**
Approvals		
CE, RCM, KCC, CSA Class I, Div. 2, Groups A,B,C,D, Class II, Div. 1 Groups E,F,G FM Class I, Zone 1, AEx m IIC, T6 Class II, III, Div. 1, Groups E,F,G T6 ATEX II 2GD / IECEx / INMETRO Ex mb IIC T6 Gb, Ex tb IIIC T85 °C Db	✧	**2**
Mounting flange (flush mount)		
None	✧	**A**
3" ASME, 150 lb, flat faced		**B**
4" ASME, 150 lb, flat faced		**C**
6" ASME, 150 lb, flat faced		**D**
DN 80, PN 10/16, Type A, flat faced		**J**
DN 100, PN 10/16, Type A, flat faced		**K**
DN 150, PN 10/16, Type A, flat faced		**L**
JIS10K 3B style		**Q**
JIS10K 4B style		**R**
JIS10K 6B style		**S**
Note: Flange bolting patterns and facings dimensionally correspond to the applicable ASME B16.5 or EN 1092-1, or JIS B 2220 standard.		

Operating Instructions	Article No.
Quick Start Manual, multi-language	**A5E32299685**
Applications Guidelines, multi-language	**7ML1998-5HV61**
Note: The Applications Guidelines should be ordered as a separate line item on the order.	
This device is shipped with the Siemens Milltronics manual DVD containing the ATEX Quick Start and Operating Instructions library.	

✧ We can offer shorter delivery times for configurations designated with the Quick Ship Symbol ✧. For details see page 9/5 in the appendix.

Selection and Ordering data	Order code
Further designs	
Please add "-Z" to Article No. and specify Order code(s).	
Acrylic coated, stainless steel tag [13 x 45 mm (0.5 x 1.75 inch)]: Measuring-point number/ identification (max. 16 characters) specify in plain text	✧ **Y17**

Accessories	Article No.
Tag, stainless steel with hole, 12 x 45 mm (0.47 x 1.77 inch), one text line for fastening on sensors	**7ML1930-1BJ**
Submergence shield kit	**7ML1830-1BH**
Easy Aimer 2, aluminum, NPT with ¾" x 1" PVC coupling	**7ML1830-1AQ**
Easy Aimer 2, aluminum with M20 adapter and 1" and 1½" BSPT aluminum couplings	**7ML1830-1AX**
Easy Aimer 304, NPT with 1" stainless steel coupling	**7ML1830-1AU**
Easy Aimer 304, with M20 adapter and 1" and 1½" BSPT 304 stainless steel couplings	**7ML1830-1GN**
FMS-200 universal box bracket, mounting kit	**7ML1830-1BK**
FMS-210 channel bracket, wall mount	**7ML1830-1BL**
FMS-220 extended channel bracket, wall mount	**7ML1830-1BM**
FMS-310 channel bracket, floor mount	**7ML1830-1BN**
FMS-320 extended channel bracket, floor mount	**7ML1830-1BP**
FMS-350 bridge channel bracket, floor mount (see Mounting Brackets on page 4/187 for more information)	**7ML1830-1BQ**
1" NPT locknut, plastic	**7ML1830-1DS**
1" BSPT locknut, plastic	**7ML1830-1DR**

✧ We can offer shorter delivery times for configurations designated with the Quick Ship Symbol ✧. For details see page 9/5 in the appendix.

© Siemens AG 2015

Selection and Ordering data		Article No.
EchoMax XRS-5C transducer	↗	**7ML1105-**
With a beam angle of 10°, the XRS-5 provides reliable, continuous level monitoring of liquids and slurries in narrow lift stations/wet wells, flumes, weirs and filter beds. Measuring range: min. 0.3 m (1 ft), max. 8 m (26 ft)		**1 - 0**
↗ Click on the Article No. for the online configuration in the PIA Life Cycle Portal.		
Process connection		
1" NPT [(Taper), ANSI/ASME B1.20.1]	✵	**1**
Cable length		
5 m (16.40 ft)	✵	**A**
10 m (32.81 ft)	✵	**B**
30 m (98.43 ft)		**C**
Facing		
Standard (CSM rubber)	✵	**A**
PTFE (flange versions)		**B**
Approvals		
CSA Class I Div. 1, Groups A,B,C,D; Class II Div. 1, Groups E,F,G; Class III	✵	**1**
Mounting flange (flush mount)		
None	✵	**A**
3" ASME, 150 lb, flat faced		**B**
4" ASME, 150 lb, flat faced		**C**
6" ASME, 150 lb, flat faced		**D**
Note: Flange bolting patterns and facings dimensionally correspond to the applicable ASME B16.5 or EN 1092-1, or JIS B 2220 standard.		

Operating Instructions	Article No.
Quick Start Manual, multi-language	**A5E32299685**
Applications Guidelines, multi-language	**7ML1998-5HV61**
Note: The Applications Guidelines should be ordered as a separate line item on the order.	
This device is shipped with the Siemens Milltronics manual DVD containing the ATEX Quick Start and Operating Instructions library.	

✵ We can offer shorter delivery times for configurations designated with the Quick Ship Symbol ✵. For details see page 9/5 in the appendix.

Selection and Ordering data		Order code
Further designs		
Please add **"-Z"** to Article No. and specify Order code(s).		
Acrylic coated, stainless steel tag [13 x 45 mm (0.5 x 1.75 inch)]; Measuring-point number/ identification (max. 16 characters) specify in plain text	✵	**Y17**

Accessories	Article No.
Submergence shield kit	**7ML1830-1BH**
Easy Aimer 2, aluminum, NPT with ¾" x 1" PVC coupling	**7ML1830-1AQ**
Easy Aimer 304, NPT with 1" stainless steel coupling	**7ML1830-1AU**
FMS-200 universal box bracket, mounting kit	**7ML1830-1BK**
FMS-210 channel bracket, wall mount	**7ML1830-1BL**
FMS-220 extended channel bracket, wall mount	**7ML1830-1BM**
FMS-310 channel bracket, floor mount	**7ML1830-1BN**
FMS-320 extended channel bracket, floor mount	**7ML1830-1BP**
FMS-350 bridge channel bracket, floor mount (see Mounting Brackets on page 4/187 for more information)	**7ML1830-1BQ**

✵ We can offer shorter delivery times for configurations designated with the Quick Ship Symbol ✵. For details see page 9/5 in the appendix.

3/12/18

© Siemens AG 2015

Dimensional drawings

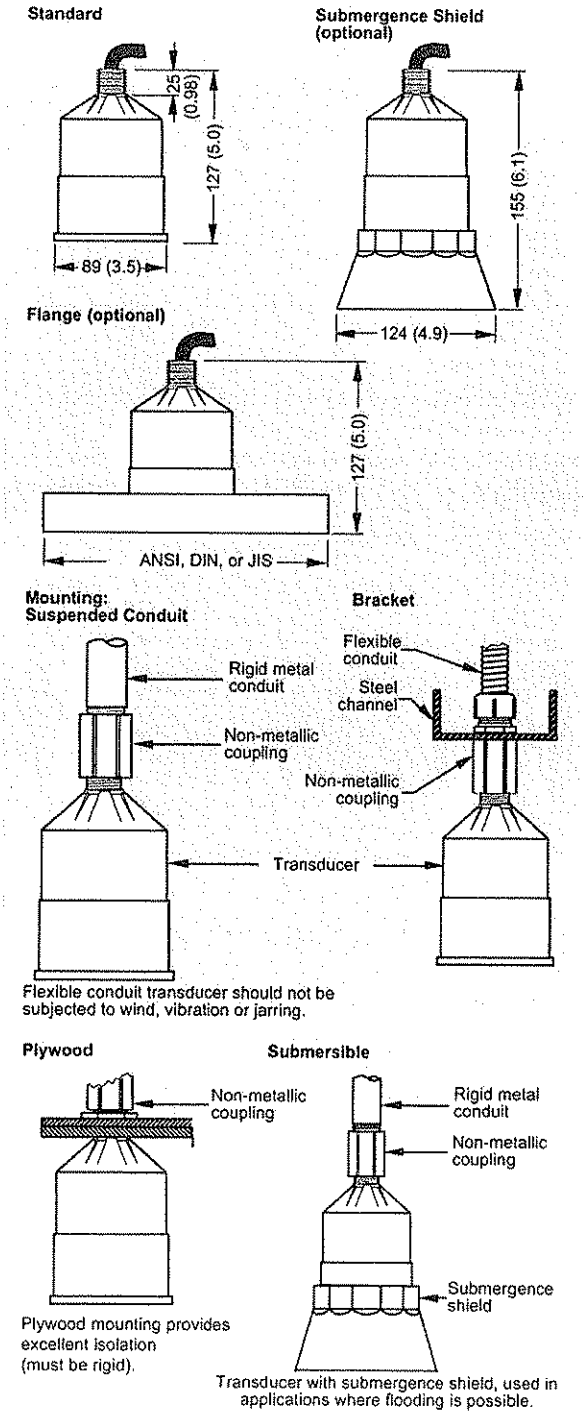

Flexible conduit transducer should not be subjected to wind, vibration or jarring.

Plywood mounting provides excellent isolation (must be rigid).

Transducer with submergence shield, used in applications where flooding is possible.

XRS-5 ultrasonic transducer, dimensions in mm (inch)

Schematics

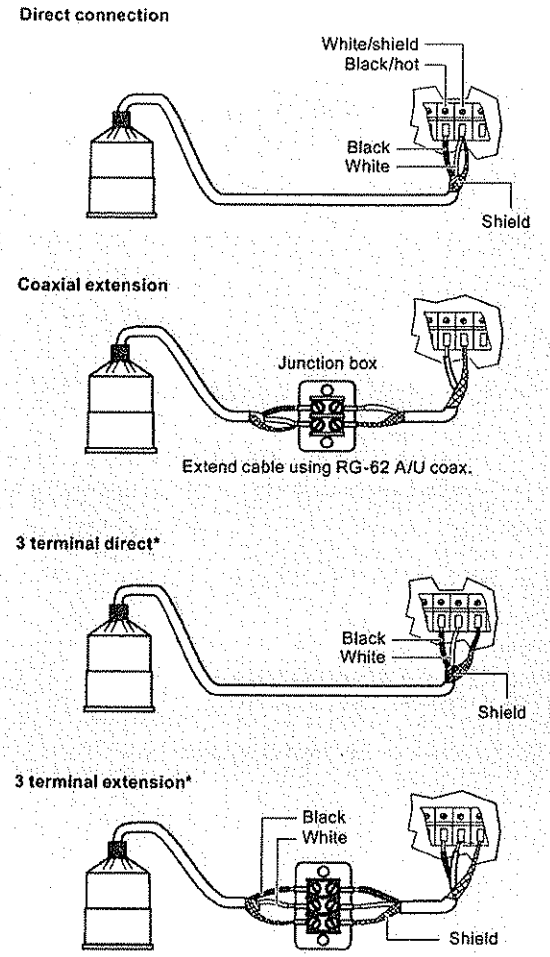

* For SITRANS LUT400, MultiRanger 100/200, HydroRanger 200

XRS-5 ultrasonic transducer connections

Έργο: Ημερ/νία: 2017-09-06
Αριθμός Έργου: Συντάκτης:

wilo

Τεχνικά στοιχεία

Υποβρύχια αντλία λυμάτων Rexa PRO C08 DA-435 / EAD1X2-T0039-540-O

Αντλία							
Τύπος αντλίας		PROC08 D A - 435		Είδος εγκατάστασης		Einhöngevorrichtung DN80/2RK	
Πτερωτή (διάμ.)	Μέγ. Δυνατή	135	mm				
	Τυπικό (βασικό)	135	mm	Ελεύθερο πέρασμα		65	mm
	Σχεδιασμ.	135	mm	Στόμιο αναρ.	Βαθμ. PN	PN10	
	Ελάχ. Δυνατή	135	mm		Ονομ. διάμ.	DN80	
Ονομαστ. αριθμός στροφών		2900	1/min		Πρότυπο	WILO-S	
Συχνότητα		50	Hz	Στόμιο κατάθλ.	Βαθμ. PN	PN10	
Τύπος πτερωτής		Μονοκάναλη			Ονομ. διάμ.	DN80, Size 3	
Κατασκευή πτερωτής		Κλειστή			Πρότυπο	WILO-D	

Βάρη				
Βάρος υδραυλ. τμήματος αντλίας	Μέγ. 13,1 kg	Βάρος συγκροτήματος	Μέγ. 55,1	kg
Βάρος κινητήρα	42 kg			

Υλικά κατασκευής			
Κέλυφος αντλίας	EN-GJL-250		
Πτερωτή	EN-GJL 250		
Δακτύλ. διαρροής	1.4308		

Κινητήρας					
Ονομασία κινητήρα	P 13.2-15/EAD1X2-T-L01		Αριθμός πόλων	2	
Ονομ. ισχύς	3,9	kW	Ονομαστ. ταχύτ. Περιστροφής	2879	1/min
Απορρόφηση ισχύος σε Ονομ. ισχύ				4,85	kW
Ονομ. τάση				400 ~3	V
Απορρόφ. ρεύματος στην ονομ. ισχύ				8,5	A
Βαθμός απόδ. στην ονομ. ισχύ				81	%
συνφ στην Ονομ. ισχύ	0,82		Ονομ. συχνότητα	50	Hz
συνφ εκκίνησης	0,5		Είδος λειτουργίας: υγρή	S1	
Ρεύμα εκκίνησης DOL	56	A	Είδος λειτουργίας: ξηρή	S2 30, S3 25%	
Ρεύμα εκκίνησης Υ/Δ	18,5	A	Μέγ. θερμοκρασία ρευστού	313	K
Ροπή στρέψης εκκίνησης	25	Nm	Μέγ. αριθμ. ωριαίων εκκιν.	50	
Ροπή αδράνειας μάζας	0,0026	kg m²	Βαθμός προστασίας	IP 68	
Επιλεγμ. αντιεκρ. Προστασία	ATEX		Αριθμός Ex	BVS 11 ATEX E 119 X	
Σήμανση Ex	II 2G Ex db IIB T4 Gb				
Καλώδιο σύνδεσης κινητήρα			7G1,5 H07RN-F		

Στοιχεία σημείου λειτουργίας					
Παροχή	51,4	m³/h	Ρευστό μέσον	Νερό, καθαρό	
Μαν. ύψος	15,6	m	Τιμή NPSH της αντλίας		m
Ισχύς στον άξονα P_2	3,1	kW	Ταχύτητα περιστροφής	2897	1/min
Βαθμός απόδ. Αντλίας	70,4	%	Ολικός βαθμός απόδοσης	$= \frac{P_2 * \text{Βαθμός απόδ. Αντλίας}}{P_1}$	
Απορροφώμενη ισχύς P_1	3,8	kW			
Μέγ. παροχή	78,8 m³/h	Μαν. ύψος σε Μέγ. Παροχή	11,9 m	Μαν. ύψος σε μηδεν. παροχή	25,2 m
Σημείο βέλτ. Απόδ. Q (ΣΒΑ)	63,6	m³/h	Σημείο βέλτιστης απόδοσης H (ΣΒΑ)		m
Νο είδους	6078113				

3/12/18

Έργο: Ημερ/νία: 2017-09-06
Αριθμός Έργου: Συντάκτης:

wilo

Τεχνικά στοιχεία

Υποβρύχια αντλία λυμάτων Rexa PRO C08 DA-435 / EAD1X2-T0039-540-O

Τεχνική περιγραφή
Υποβρύχια αντλία λυμάτων, ως υποβρύχιο συγκρότημα με κινητήρα, για σταθερή, κατακόρυφη τοποθέτηση, για άντληση ανεπεξέργαστων χημικά και μηχανικά μη διαβρωτικών για την αντλία, λυμάτων. Ακτινικά διατεταγμένο στόμιο κατάθλιψης και αξονική αναρρόφηση. Το συγκρότημα είναι κατασκευασμένο με τρόπο εύκολο για τη συντήρηση. Οι παροχές πρέπει να εξασφαλίζονται κατά ISO 9906 Παρ. A.

3/12/18

Έργο: Ημερ/νία: 2017-09-06
Αριθμός Έργου: Συντάκτης:

wilo

Καμπύλες απόδοσης

Υποβρύχια αντλία λυμάτων — Rexa PRO C08 DA-435 / EAD1X2-T0039-540-O

Στοιχεία ισχύος σε σχέση με: Νερό, καθαρό [100%] ; 293K; 998,19kg/m³; 1,0004mm²/s
Απόκλιση κατά ISO 9906 / Παράρτημα A.2

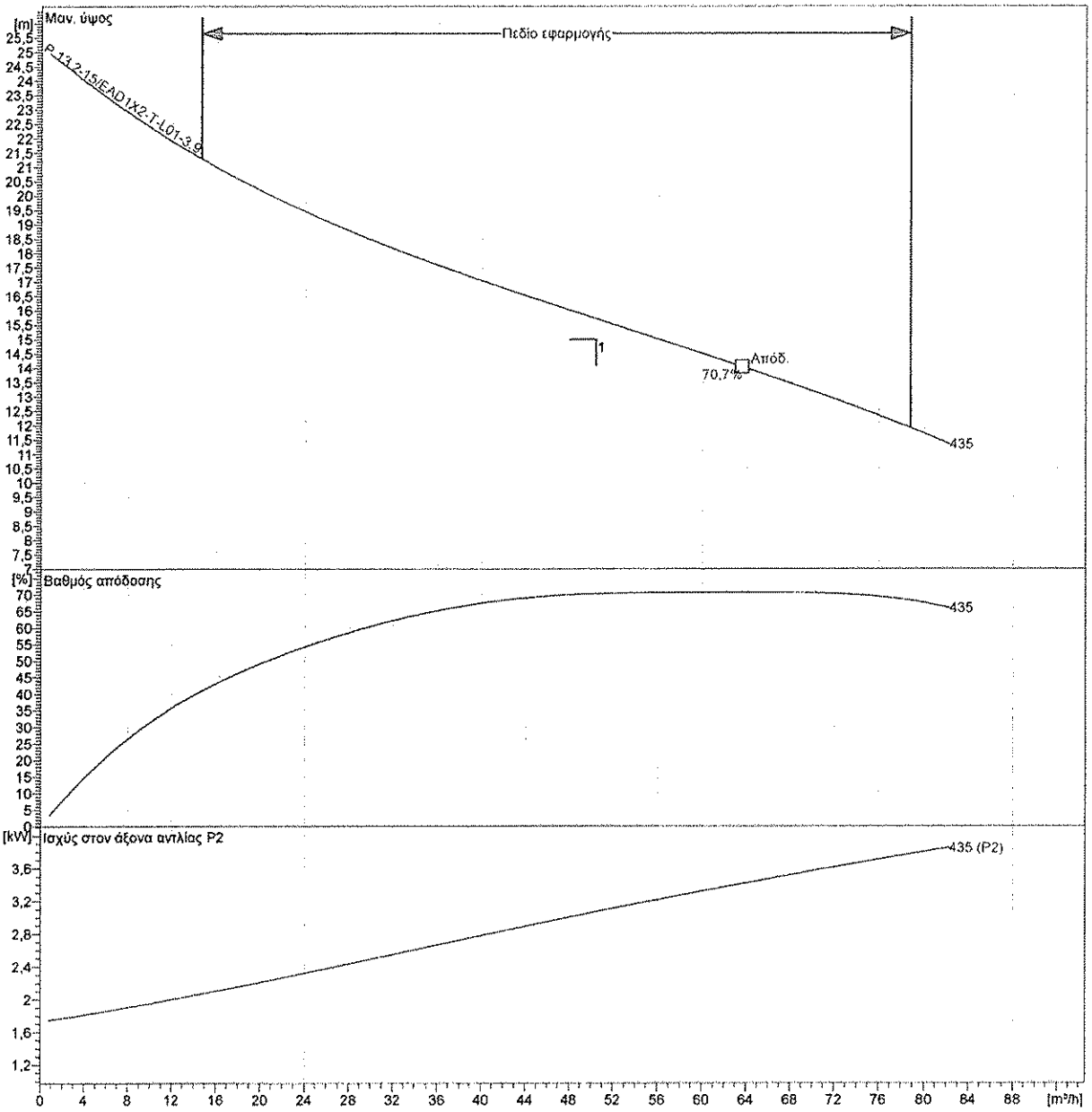

Αντλία			Στοιχεία σημείου λειτουργίας		
Πτερωτή (διάμ.) Σχεδιασμ.	135	mm	Παροχή	51,4	m³/h
Ονομαστικός αριθμός στροφών	2900	1/min	Μαν. ύψος	15,6	m
Συχνότητα	50	Hz	Ισχύς στον άξονα P_2	3,1	kW
Τύπος πτερωτής	Μονοκάναλη		Βαθμός απόδ. Αντλίας	70,4	%
Κινητήρας			Απορροφώμενη ισχύς P_1	3,8	kW
Ονομ. ισχύς	3,9	kW	Τιμή NPSH της αντλίας		m
Επιλεγμ. αντιεκρ. Προστασία	ATEX		Ταχύτητα περιστροφής	2897	1/min

3/12/18

Έργο:
Αριθμός Έργου:

Ημερ/νία: 2017-09-06
Συντάκτης:

wilo

Τεχνικά στοιχεία

Υποβρύχια αντλία λυμάτων

Rexa PRO C08 DA-435 / EAD1X2-T0039-540-O

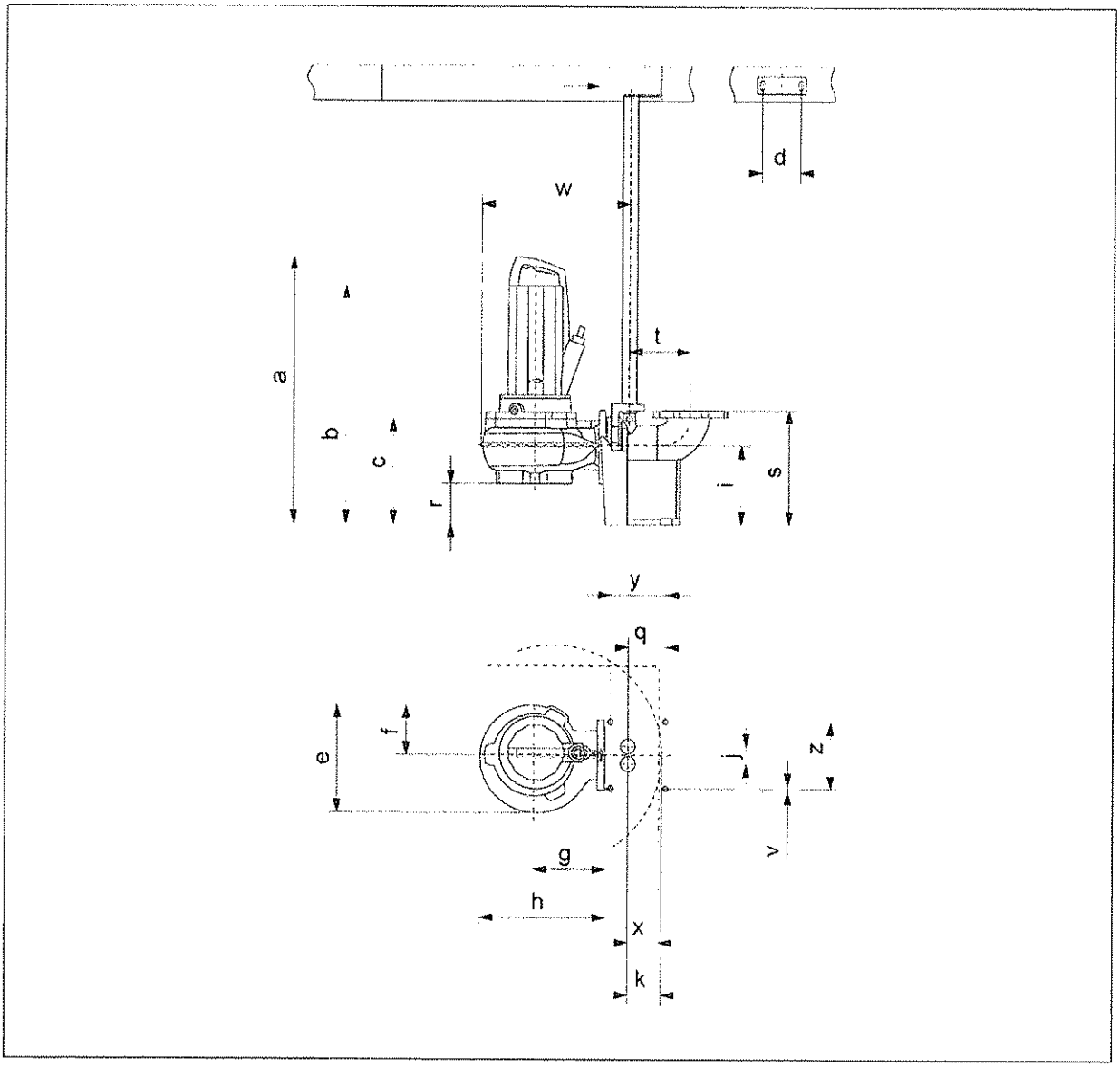

Διαστάσεις σε mm				Συνδέσεις
a	731	r	119	Στόμιο αναρ. DN80 PN10
b	648	s	300	
c	268	t	166	
d	110	v	15	
e	235	w	417	Στόμιο κατάθλ. DN80, Size 3, cutoff PN10
f	124	x	90	
g	150	y	120	
h	268	z	170	
i	210			Einhδngevorrichtung DN80/2RK
j	50			
k	95			
q	69			

3/12/18

Έργο: Ημερ/νία: 2017-09-06
Αριθμός Έργου: Συντάκτης:

wilo

Στοιχεία κινητήρα

P 13.2-15/EAD1X2-T-L01-3,9 3,9 kW 400 V 50Hz 3~

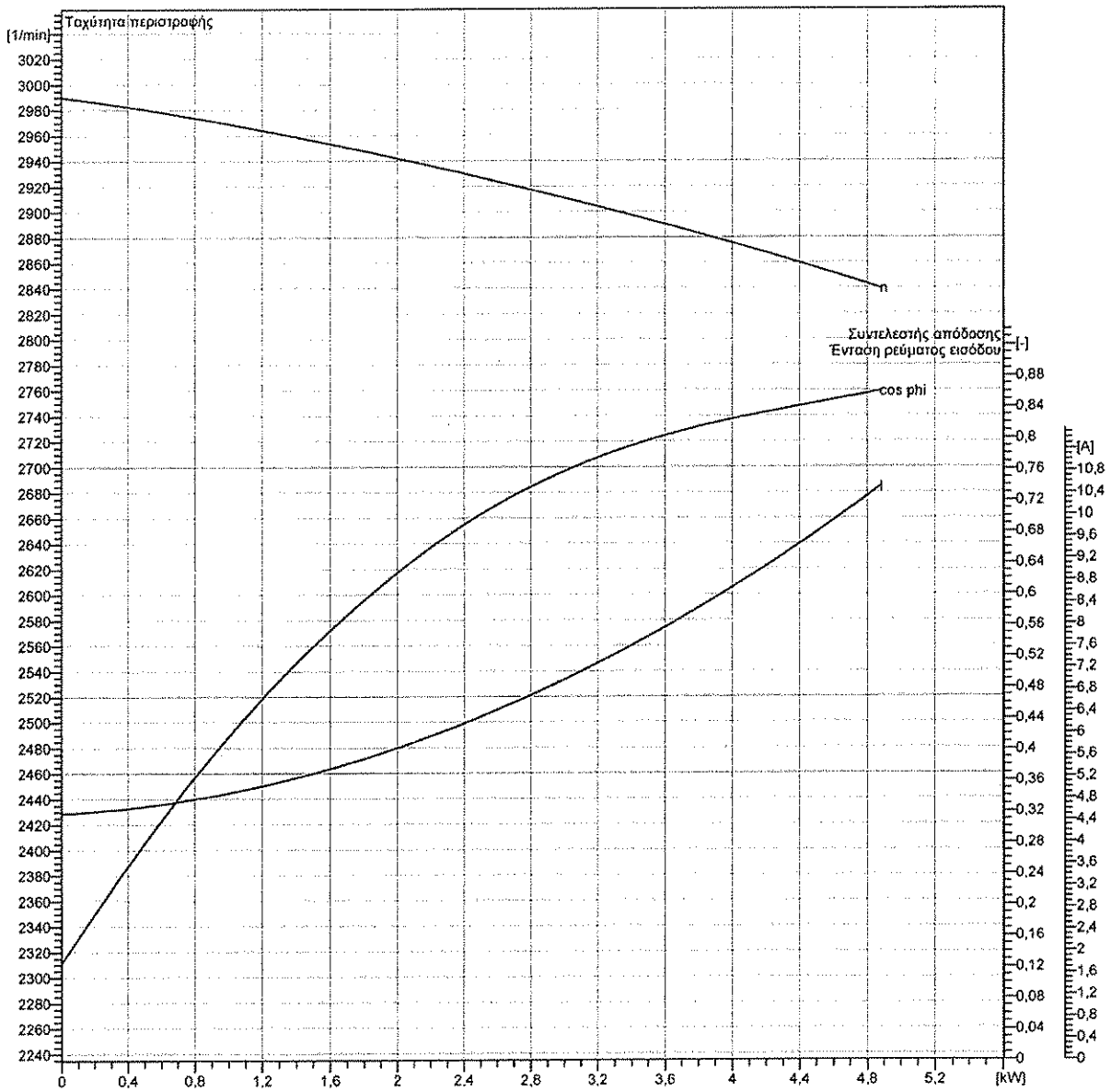

Στοιχεία εφαρμογής			Στοιχεία κινητήρα		
Είδος υποβρύχιας λειτουργίας	S1		Απορρόφηση ισχύος σε Ονομ. ισχύ	4,85	kW
Είδος λειτουργίας: ξηρή	S2 30, S3 25%		Ονομ. ισχύς	3,9	kW
Συντελεστής Service	1		Ονομαστ. ταχύτ. Περιστροφής	2879	1/min
Μέγ. θερμοκρασία ρευστού	313	K	Απορρόφ. ρεύματος στην ονομ. ισχύ	8,5	A
Αντιεκρηκτική προστασία			Μέγ. αριθμ. ωριαίων εκκιν.	50	
Επιλεγμ. αντιεκρ. Προστασία	ATEX		Βάρος κινητήρα	42	kg
Αριθμός Ex	BVS 11 ATEX E 119 X		Βαθμός απόδ. στην ονομ. ισχύ	81	%
Σήμανση Ex	II 2G Ex db IIB T4 Gb		συνφ στην Ονομ. ισχύ	0,82	
Καλώδιο σύνδεσης κινητήρα			Ρεύμα εκκίνησης DOL	56	A
Καλώδιο σύνδ. κινητ.για εκκίνηση DOL	7G1,5 H07RN-F		συνφ εκκίνησης	0,5	
Καλώδιο σύνδ. κινητ. για εκκίνηση Y/Δ			Ροπή στρέψης εκκίνησης	25	Nm
Μέγ. δυνατό καλ. σύνδ. Κινητήρα	7x1,5	mm²	Ροπή αδράνειας μάζας	0,0026	kg m²

3|12|18

SIEMENS

SINAMICS G120C

The compact and versatile inverter with optimum functionality

siemens.com/sinamics-g120c

Answers for industry. 3/12/18

The compact inverter for countless applications

The SINAMICS G120C defines new standards in its class regarding size, fast commissioning, extremely simple operator control, high level of service-friendliness and highly integrated functionality.

It is predestined for machinery construction and sales through distribution channels and covers the requirements of many applications, e.g. for conveyor belts, mixers, extruders, pumps, fans, compressors and basic handling machines.

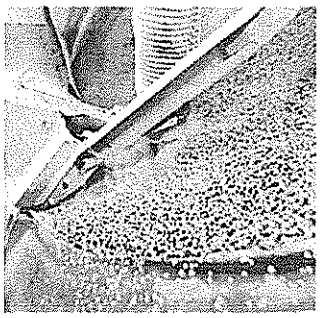

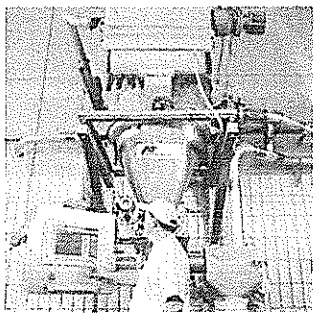

SINAMICS offers a whole raft of advantages:

- Standard operator control and functionality as a result of the common hardware and software platform
- Both low voltage as well as medium voltage
- A common engineering approach for all drives
  - SIZER for engineering
  - STARTER for parameterization and commissioning
- High degree of flexibility and combinability
- Identical options
- Minimized training costs

Decisive advantages for machinery construction

SINAMICS G120C was specifically designed for OEMs who require a cost-effective, space-saving inverter that is simple to operate and has a broad range of functions. This drive unit is especially compact with a high power density and sets itself apart as a result of its fast installation and commissioning, user-friendly connections and simple commissioning tools. Already integrated: Safety functions (STO via terminal/with PROFIsafe), drive networking via standard fieldbus systems as well as a card slot for cloning parameter sets.

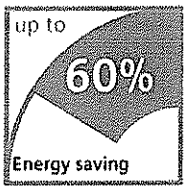

With three frame sizes, SINAMICS G120C covers a range of power ratings from 0.55 kW up to 18.5 kW. To increase the energy efficiency, the inverter is equipped with vector control to achieve optimum energy efficiency and/or has automatic flux reduction. The device is an integral component of Totally Integrated Automation and has PROFINET, PROFIBUS DP, USS/Modbus RTU as well as CANopen communication interfaces. Operation/commissioning is quickly and simply realized with a PC via USB or using the BOP-2 (Basic Operator Panel) or IOP (Intelligent Operator Panel).

SINAMICS G120C is part of the SINAMICS family

SINAMICS G120C is a member of the seamless and integrated family of SINAMICS drives – the first choice for innovative drive solutions that are fit for the future. SINAMICS offers the optimum drive for each and every application. As a consequence, all of the drives can be configured, parameterized, commissioned and operated in a standard fashion.

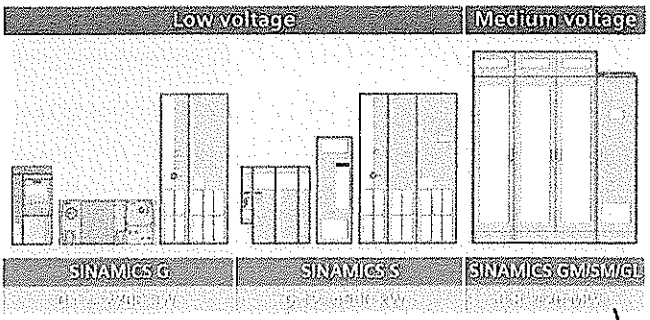

3/12/18

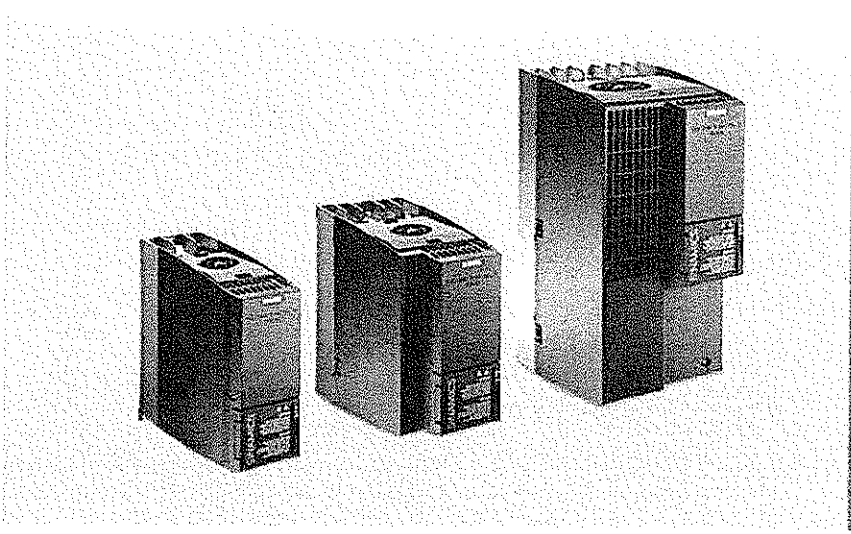

Highlights at a glance

Mechanical design
- Compact
- Simple commissioning and maintenance
- Side-by-side mounting without derating
- Pluggable terminals

Electronics
- Integrated braking chopper
- STO safety function
- IOP , BOP-2 and USB interface
- Optional interchangeable memory card (SD)
- Electrically isolated inputs

Communication
- PROFINET, PROFIBUS DP, CANopen, USS/Modbus RTU
- Integral component of Totally Integrated Automation
- Supported profiles: PROFIenergy and PROFIsafe

SINAMICS G120C – advantages

	G120C features	Your benefits
Small and rugged		
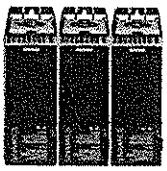	• High power density, low envelope dimensions • Several devices can be mounted directly next to one another • Coated modules Operation up to an ambient temperature of 60 °C Simple installation in the smallest space	• Low space requirement • Long service life, high reliability • Can be used in small control cabinets, close to the machine
Operator friendliness		
	• Optimized parameter set • Optimized commissioning • Getting-Started document • BOP-2 and IOP operator panels can be used • Integrated USB port	• Simple and fast software parameterization • Simple operability during commissioning and in operation • Minimized training costs, utilization of already existing SINAMICS know-how • High degree of service friendliness
Installation and maintenance		
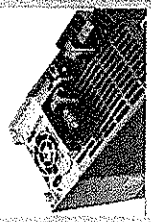	• Pluggable terminals • Cloning function using BOP-2, IOP or SD card • G120C integrated in TIA teleservice • Operating hours counter for "Drive on" and "Motor on"	• Fast mechanical installation • Intuitive series commissioning • Integration in the automation environment • Simple maintenance
Reading technological functions		
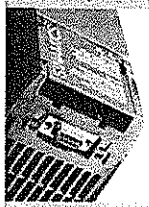	• Energy-efficient, encoderless vector control • Automatic flux reduction with V/f ECO • Integrated energy calculator • Safety Integrated (STO) • Supported profiles: PROFIsafe, PROFIenergy	• High control quality • Energy-efficient motor control • Energy-saving can be measured • Integrated safety functions without supplementary costs
State-of-the-art communication		
	The following versions are available: • PROFINET • PROFIBUS DP • CANopen • USS/Modbus RTU • Ethernet/IP	• Uses all of the common bus systems • Can be flexibly used • Reliable communication • Can be simply plugged in • Uninterruptible thanks to the optional 24V power supply

3/12/18

Selection and ordering data

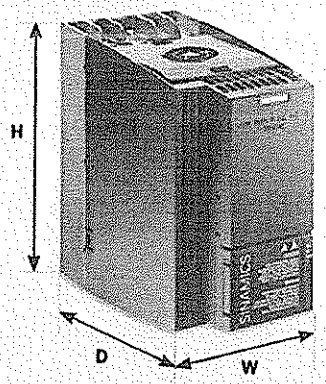

Rated power				Article Number				Frame size	Dimensions		
P_{LO} kW	P_{LO} Hp	I_{LO_out} A	I_{HO_out} A						W	H	D[3]
3-phase supply voltage 380–480 V									mm	mm	mm
0.55	0.75	1.7	1.3	6SL3210-1KE11-8				FSA	73	196	203 (PROFINET: + 22,4 mm)
0.75	1.0	2.2	1.7	6SL3210-1KE12-3							
1.1	1.5	3.1	2.2	6SL3210-1KE13-2							
1.5	2.0	4.1	3.1	6SL3210-1KE14-3							
2.2	3.0	5.6	4.1	6SL3210-1KE15-8							
3	4.0	7.3	5.6	6SL3210-1KE17-5							
4	5.0	8.8	7.3	6SL3210-1KE18-8							
5.5	7.5	12.5	8.8	6SL3210-1KE21-3				FSB	100		
7.5	10.0	16.5	12.5	6SL3210-1KE21-7							
11	15.0	25.0	16.5	6SL3210-1KE22-6				FSC	140	295	
15	20.0	31.0	25.0	6SL3210-1KE23-2							
18.5	24.0	37.0	31.0	6SL3210-1KE23-8							

EMC filter			
Integrated EMC Class A/C2 filter[4]	A		
Unfiltered version	U		
Integrated communication interface			
RS485 with USS/Modbus RTU		B	1
SUB-D with PROFIBUS DP		P	1
SUB-D with CANopen		C	1
PROFINET		F	1

[1]LO = Low Overload
[2]HO = High Overload
[3]Frame size FSA- FSC with PROFINET depth: additional, 22.4mm
[4]For detailed information on maintaining interference classes, refer to the product documentation
[5]The continuous output current is not reduced when using the overload capability

Technical data

Voltage/frequency	3-phase 380–480 V –20 % +10 % with 50/60 Hz +/–5 %
Power range	0.55–18.5 kW/ 0.75–25 Hp
Overload power	For I_{LO_out} (LO [1]): 150% for 3 sec. Plus 110% for 57 sec. within a 300 sec. load cycle For I_{HO_out} (HO [2]): 200% for 3 sec. Plus 150% for 57 sec. within a 300 sec. load cycle [5]
Degree of protection	IP20/UL open type
Ambient temperature	-10° to 40 °C without derating/up to 60 °C with derating
EMV	Acc. to IEC 61800-3, Category 2 (FS A,B) or Category 3 (FSC) with internal EMC filter
Motor cable lengths	50 m shielded/100 m unshielded
Signal inputs/outputs	6 DI/ 2 DO/ 1 AI/ 1 AO
Safety technology	SIL 2 acc. EN 61508, PL d acc. EN ISO 13849, class 3 acc. EN 60204
Control modes	Vector, V/f, V/f ECO
Energy functions	Energy-saving calculator, energy consumption calculator, automatic flux reduction
Function	Fixed velocity/speed setpoint, 2/3 wire control, PID controller, motor holding brake control
Braking	Integrated braking chopper

Options

Braking resistor		
FSA	0.55–1.5 kW	6SL3201-0BE14-3AA0
FSA	2.2–4 kW	6SL3201-0BE21-0AA0
FSB	5.5–7.5 kW	6SL3201-0BE21-8AA0
FSC	11–18.5 kW	6SL3201-0BE23-8AA0
Input reactor		
FSA	0.55–1.1 kW	6SL3203-0CE13-2AA0
FSA	1.5–4 kW	6SL3203-0CE21-0AA0
FSB	5.5–7.5 kW	6SL3203-0CE21-8AA0
FSC	11–18.5 kW	6SL3203-0CE23-8AA0
Operator panels		
BOP-2	Basic Operator Panel	6SL3255-0AA00-4CA1
IOP	Intelligent Operator Panel	6SL3255-0AA00-4JA1
Output reactor		
FSA	0,55–2,2 kW	6SL3202-0AE16-1CA0
FSA	3–4 kW	6SL3202-0AE18-8CA0
FSB	5,5–7,5 kW	6SL3202-0AE21-8CA0
FSC	11–18,5 kW	6SL3202-0AE23-8CA0
Democase SINAMICS G120C		
G120C PN FSA with motor and panels		6AG1067-2AA00-0AA0

Contact person:

Siemens AG
Industry Sector
Motion Control Systems
P.O. Box 3180
91050 ERLANGEN
GERMANY

Subject to change without prior notice
Article No.: E80001-A360-P210-V5-7600
DISPO 21500
SCHÖ/1000022620 V6.MKSINA.WES
WS 06147.0
Printed in Germany
© Siemens AG 2014

The information provided in this brochure contains merely general descriptions or characteristics of performance which in actual case of use do not always apply as described or which may change as a result of further development of the products. An obligation to provide the respective characteristics shall only exist if expressly agreed in the terms of contract. All product designations may be trademarks or product names of Siemens AG or supplier companies whose use by third parties for their own purposes could violate the rights of the owners.

3/12/18

KARKANIAS
ENVIRONMENTAL TECHNOLOGY S.A.

WALL PENSTOCKS

Manufacturer General Specifications

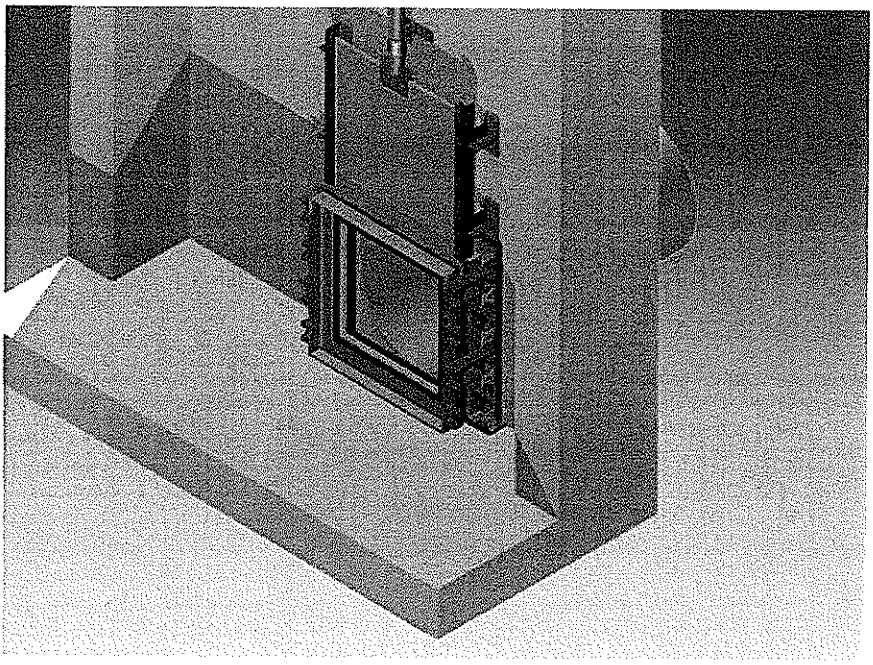

General description

Wall penstocks are 4-sided sealing gates manufactured in square and rectangular dimensions, together with a wide range of trim levels and designs to suit a variety of applications. Operation is achieved manually by means of a hand wheel, electrically or pneumatically by actuators. Electric motors and actuators are optionally offered with explosion protection in case of installation in hazardous areas. Mounting can be easily achieved on face wall of manholes (in front of wall openings or pipe endings) and in depth according to required specifications. The whole structure is made of stainless steel grade 316L for higher corrosion resistance.

HEADQUARTERS:
Industrial Area of Larisa
Postal Code 41004, BOX 3053 Greece
www.karkanias.gr

Phone: +30 2410 541386
Fax: +30 2410 541354
Email: info@karkanias.gr

3/12/18

KARKANIAS
ENVIRONMENTAL TECHNOLOGY S.A.

Construction

- **Frame**: welded stainless steel
- **Frame seals**: parallel resilient EPDM seals bonded to frame sides
- **Door**: stainless steel with reinforcement angles if required
- **Guide system**: stainless steel and PTFE
- **Spindle nut**: zinc-free bronze
- **Spindle drive unit**: stainless steel with trapezoidal thread
- **Operation**: electric with AUMA actuator with explosion-proof motor II 2 G EExe II T3
- **Dimensions**: upon request

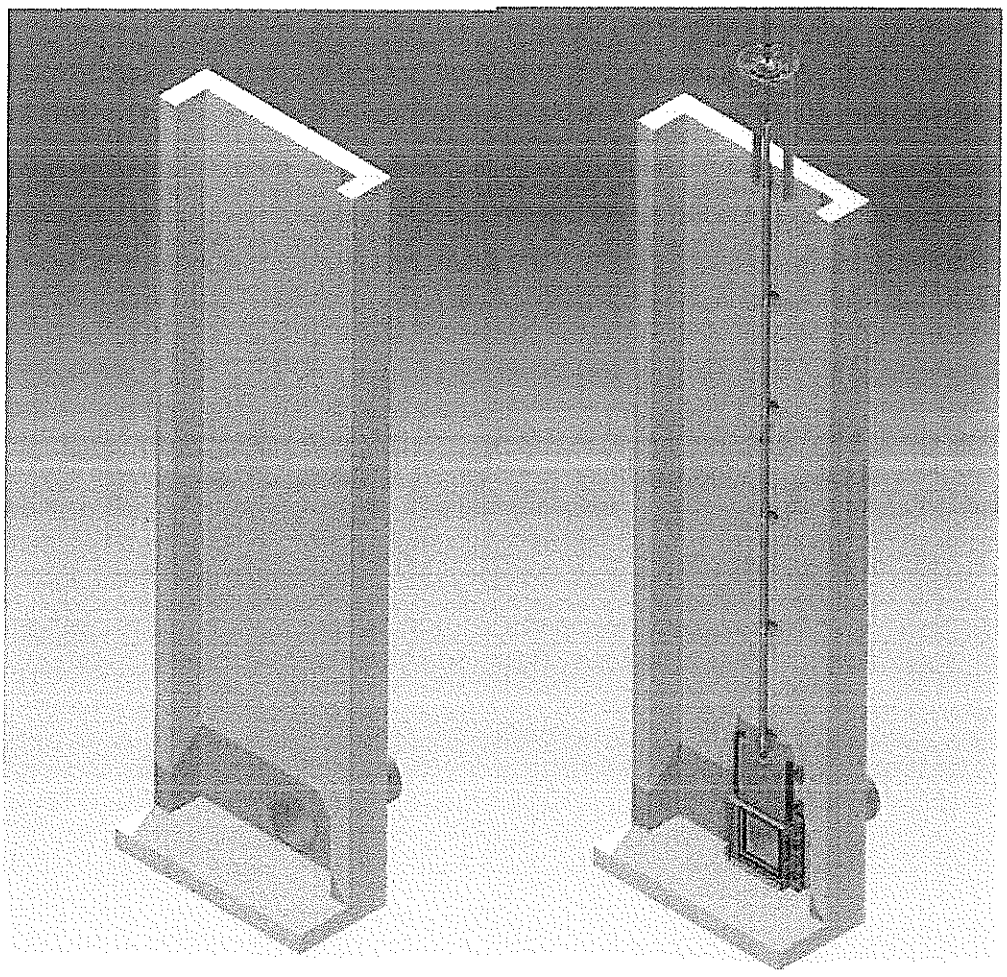

HEADQUARTERS:
Industrial Area of Larisa
Postal Code 41004, BOX 3053 Greece
www.karkanias.gr

Phone: +30 2410 541386
Fax: +30 2410 541354
Email: info@karkanias.gr

3/12/18

KARKANIAS
ENVIRONMENTAL TECHNOLOGY S.A.

Design

Wall penstocks frame is welded stainless steel shaped in U-profile and is suitable for mounting on concrete walls in front of openings or pipes. Each penstock is provided with a suitable handwheel of adequate diameter for the duty required. Gearing is supplied where is necessary to ensure that the required operating force applied by hand to the rim of the wheel does not exceed 200 N. Instead of handwheel an electric actuator can be applied in line with required technical specifications. The height of the handing is approximately 1.0 m above the operating level.

Penstocks are of non-rising stem and operation is achieved by a spindle. Spindle's thread form is trapezoidal and direction of closing is clockwise. On the door is fixed the spindle nut which is made of zinc-free bronze. The door is equipped with reinforced ribs in order to withstand the applied pressure load.

Fixing nuts and bolts are made of stainless steel material with grade similar to whole structure.

Penstocks shall be water-tight under the conditions of head and direction of flow as stated in the appropriate Clause or Schedule of the Particular Specification.

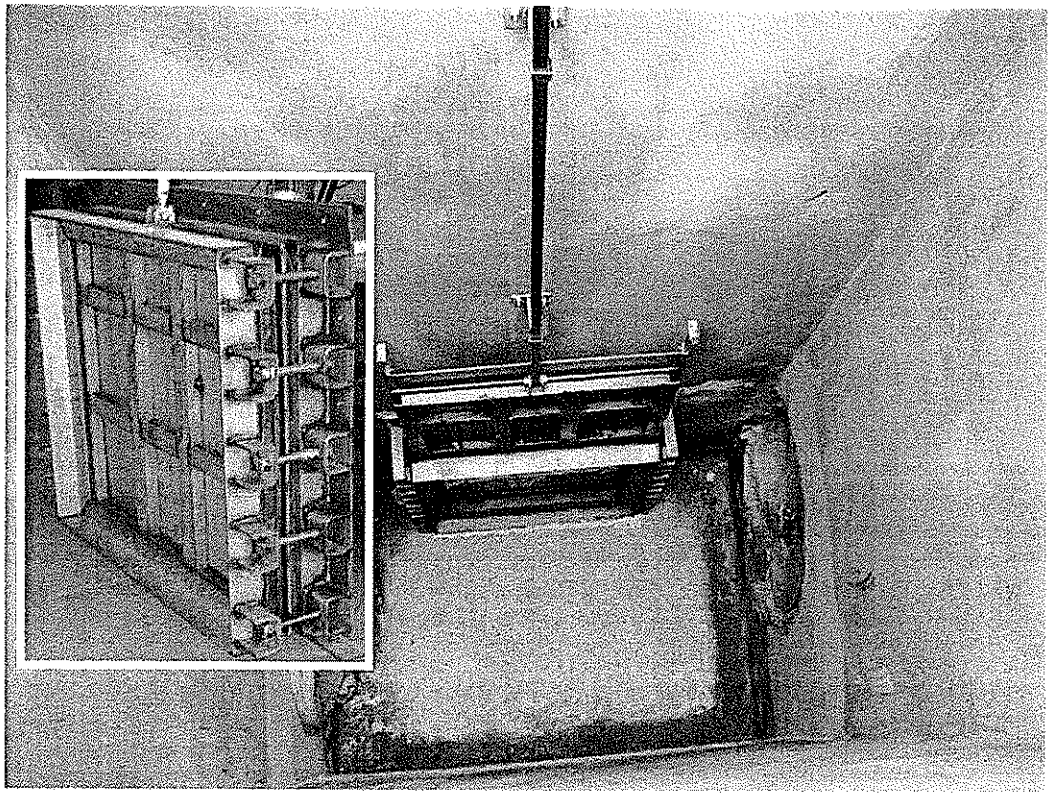

HEADQUARTERS:
Industrial Area of Larisa
Postal Code 41004, BOX 3053 Greece
www.karkanias.gr

Phone: +30 2410 541386
Fax: +30 2410 541354
Email: info@karkanias.gr

3/12/18

KARKANIAS
ENVIRONMENTAL TECHNOLOGY S.A

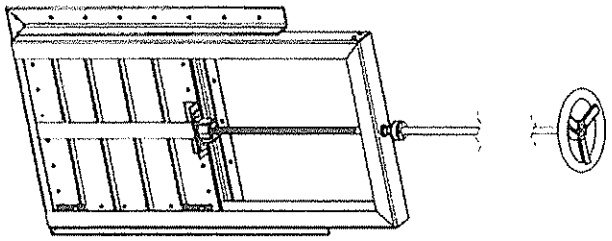

A=OPENING WIDTH
B=PENSTOCK WIDTH
C=OPENING HEIGHT
D=PENSTOCK HEIGHT
E=TOTAL HEIGHT

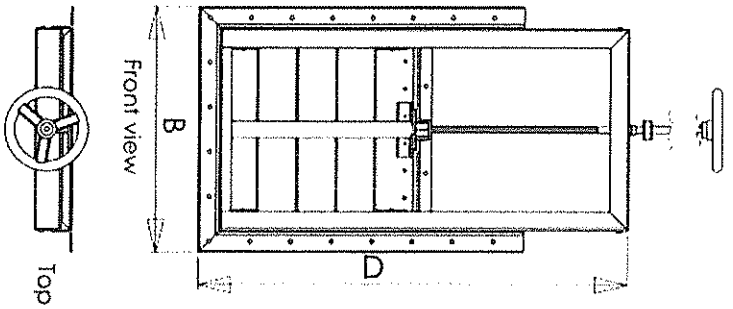

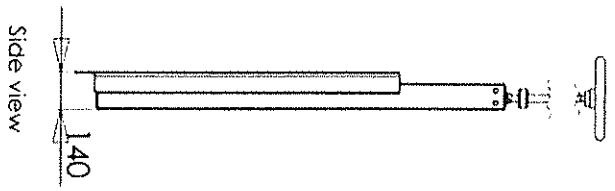

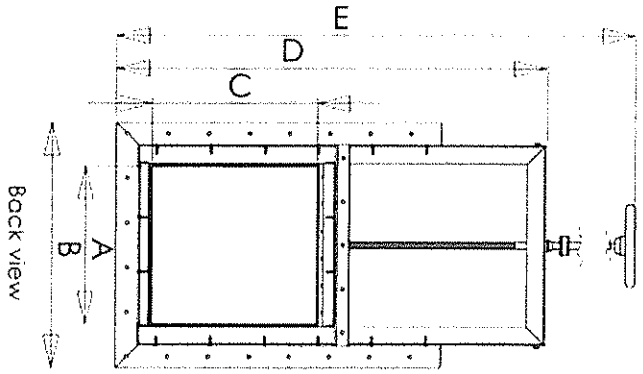

KARKANIAS
ENVIRONMENTAL TECHNOLOGY SA

WALL PENSTOCK

PS706504

A4

AISI 316L

HEADQUARTERS:
Industrial Area of Larisa
Postal Code 41004, BOX 3053 Greece
www.karkanias.gr

Phone: +30 2410 541386
Fax: +30 2410 541354
Email: info@karkanias.gr

3/12/18

3/12/18

4. MECHANICAL WASTEWATER PRETREATMENT UNIT

3/12/18

GDF

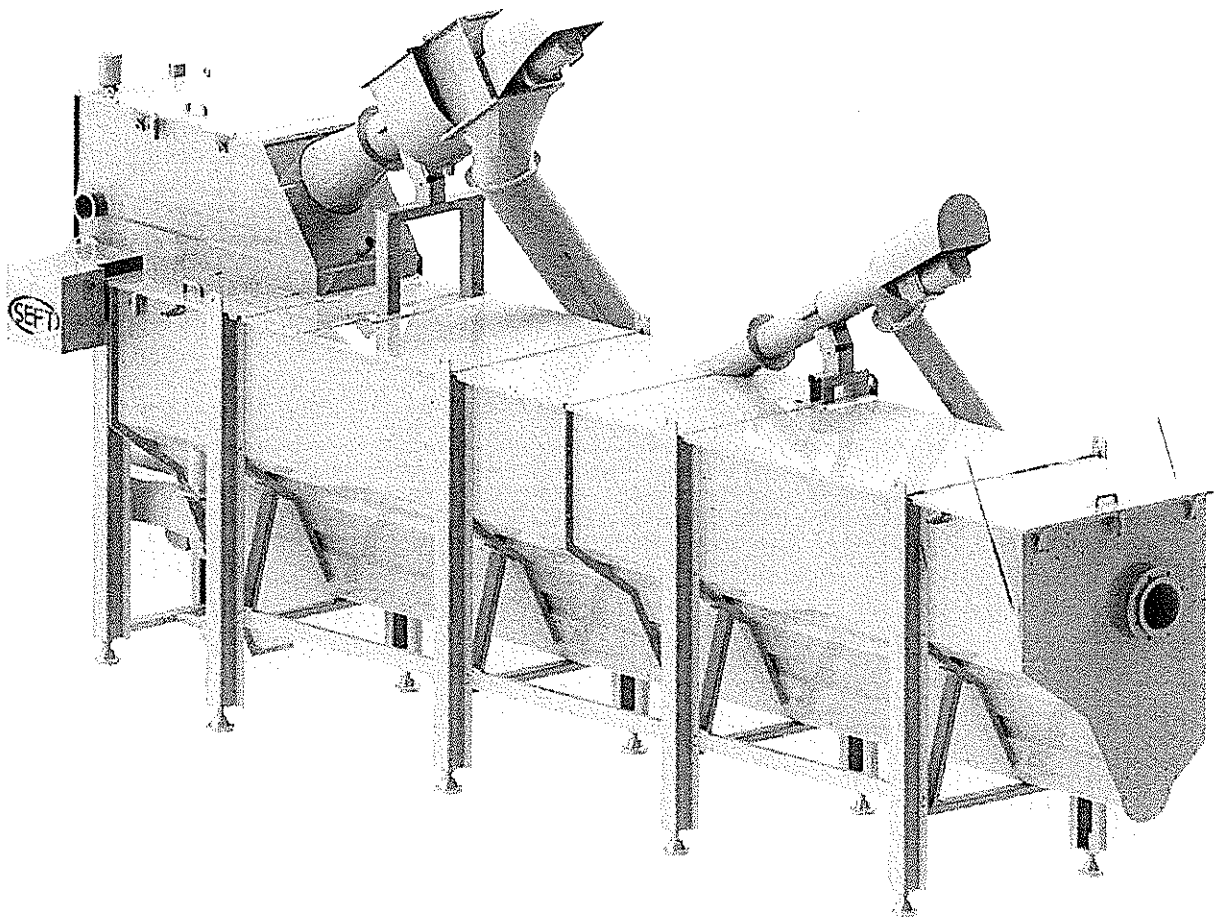

IMPIANTO DI PRE TRATTAMENTO COMPATTO

PRE-TREATMENT COMBINED COMPACT UNIT

3/12/19

GDF - IMPIANTO DI PRE TRATTAMENTO COMPATTOI

Questa macchina combinata viene alimentata da una pompa oppure per gravità, attraverso una tubazione fissa.
Il refluo passa attraverso una filtrococlea che rimuove le particelle solide più grosse, poi giunge in una vasca di sedimentazione dove le particelle sedimentate vengono poi rimosse da un sistema di coclee.
Come optional è possibile installare il sistema di rimozione dei grassi e degli oli sospesi.

FUNZIONI
- Filtrazione
- Lavaggio/compattazione dei solidi rimossi
- Estrazione sabbie
- Degrassatura (versione GDF/D)

VANTAGGI
- Assenza di odori
- Assenza di bloccaggi
- Bassi costi di gestione e manutenzione
- Ridotti spazi richiesti
- Lavori edili non necessari
- Facilità di installazione e gestione
- Bassi residui di materia organica nel solido estratto
- Riduzione fino al 40% in volume dei solidi rimossi

CARATTERISTICHE COSTRUTTIVE

Portata in ingresso	Fino a 150 lt./sec.
Foratura vaglio	ø 3 ÷ ø 7 mm foro tondo

GDF - PRE-TREATMENT COMBINED COMPACT UNIT

This combined machine is fed by a pump or to gravity, through a fixed pipe.
The effluent passes through a screw screen that removes the most large solid particles, then goes to a sedimentation tank where the particles sedimented are then removed by a system of scews.
As an option you can install the system for removal of fats and suspended oils.

FEATURES
- *Filtration*
- *Wash / compaction of solids removed*
- *Extraction of sand*
- *Degreasing (on GDF/D version)*

ADVANTAGES
- *No odor*
- *Low operating costs and maintenance*
- *Reduced space requested*
- *Construction work is not necessary*
- *Ease of installation and management*
- *Low organic matter in the solid residue extracted*
- *Up to 40% by volume of solids removed*

MANUFACTURING FEATURES

Inlet flow rate	*up to 150 lt./sec.*
Filtering options	*ø 3 ÷ ø 7 mm holes*

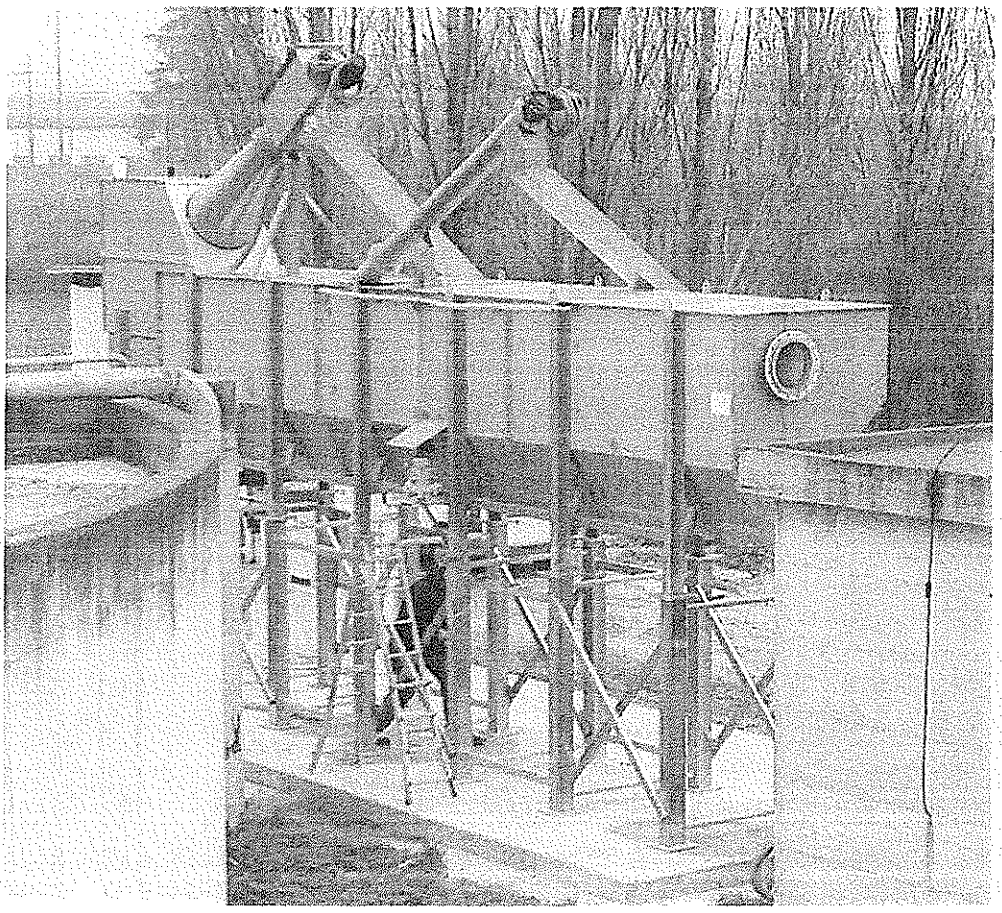

3/12/18

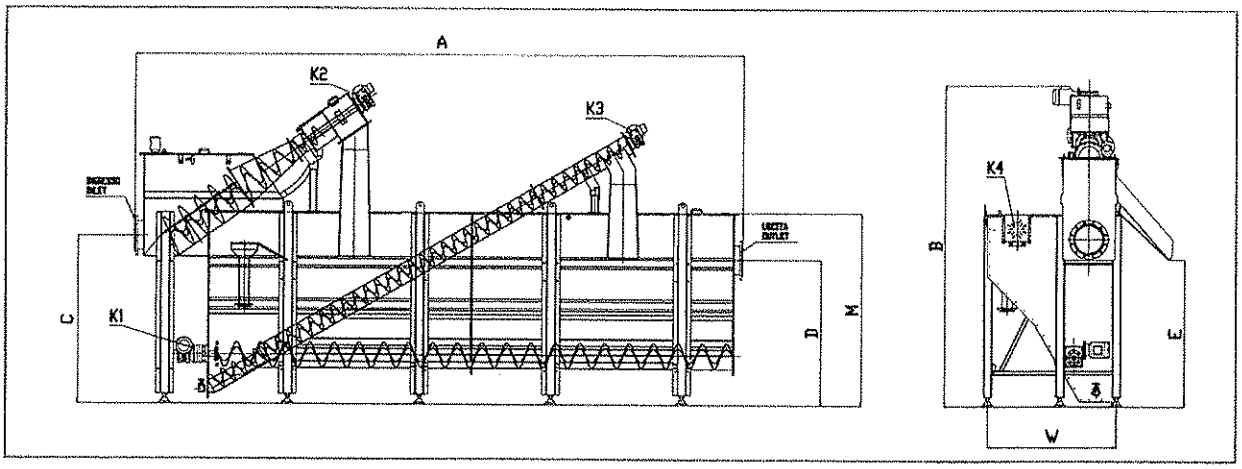

DETTAGLI TECNICI / *TECHNICAL DETAILS*

	Q L/sec	A mm	B mm	C mm	D mm	E mm	M mm	W mm	INLET/OUTLET PN10
GDF 10	10	4200	2800	1400	1100	1375	1600	730	DN200
GDF 20	20	5700	3530	1502	1440	1500	1900	730	DN200
GDF 30	30	7200	3530	1502	1440	1500	1900	730	DN250
GDF 45	45	6950	3770	1850	1550	1550	2180	1100	DN250
GDF 60	60	8455	3920	1900	1650	1670	2180	1100	DN350
GDF 80	80	8615	4115	1900	1600	1815	2180	1300	DN350
GDF 100	100	11950	5265	2500	2000	1700	2770	1600	DN500
GDF 120	120	13600	4957	2396	2285	1500	2710	1600	DN500
GDF 150	150	16600	4957	2396	2285	1500	2710	1600	DN500

TABELLA POTENZE APPLICATE / *INSTALLED POWER TABLE*

		GDF10	GDF20	GDF30	GDF45	GDF60	GDF 80	GDF 100	GDF120	GDF150
K1	Kw	0,55	0,55	0,55	0,55	0,55	0,55	0,55	0,75	0,75
K2	Kw	1,1	1,1	1,1	1,1	1,1	1,5	1,5	2,2	2,2
K3	Kw	0,37	0,37	0,37	0,37	0,37	0,37	0,55	0,55	0,55

TABELLA DIMENSIONALE / *DIMENSION TABLE*

	Q L/sec	A mm	B mm	C mm	D mm	E mm	M mm	W1 mm	INLET OUTLET PN10	OUTLET GREASE PN10
GDF/D 10	10	4200	2800	1400	1100	1375	1250	1300	DN200	DN 100
GDF/D 20	20	5700	3530	1502	1440	1500	1250	1200	DN200	DN 100
GDF/D 30	30	7200	3530	1502	1440	1500	1250	1200	DN250	DN 100
GDF/D 45	45	6950	3770	1850	1550	1550	2180	1450	DN250	DN 100
GDF/D 60	60	8455	3920	1900	1650	1670	2180	1450	DN350	DN 100
GDF/D 80	80	8615	4115	1900	1600	1815	2180	1580	DN350	DN 125
GDF/D 100	100	11950	5265	2500	2000	1700	2770	1930	DN500	DN 125
GDF/D 120	120	13600	4957	2396	2285	1500	2100	2060	DN500	DN 125
GDF/D 150	150	16600	4957	2396	2285	1500	2100	2060	DN500	DN 125

TABELLA POTENZE INSTALLATE / *INSTALLED POWER TABEL*

	GD	F10	GDF20	GDF30	GDF45	GDF60	GDF 80	GDF 100	GDF120	GDF150
K1	Kw	0,55	0,55	0,55	0,55	0,55	0,55	0,55	0,75	0,75
K2	Kw	1,1	1,1	1,1	1,1	1,1	1,5	1,5	2,2	2,2
K3	Kw	0,37	0,37	0,37	0,37	0,37	0,37	0,55	0,55	0,55
K4	Kw	0,18	0,18	0,18	0,18	0,18	0,18	0,18	0,18	0,18

3/12/18

GDF
GDF/D

* Per altri accessori qui non indicati o richieste di configurazione fuori standard, inviare cortesemente richiesta via e-mail
* Il costruttore si riserva il diritto di modificare dimensioni e specifiche tecniche senza alcun preavviso

GDF
GDF/D

* *For other optionals or special equipment configuration, please send us an e-mail request*
* *Manufacturer may modify some dimensions or technical specs without prior comunication*

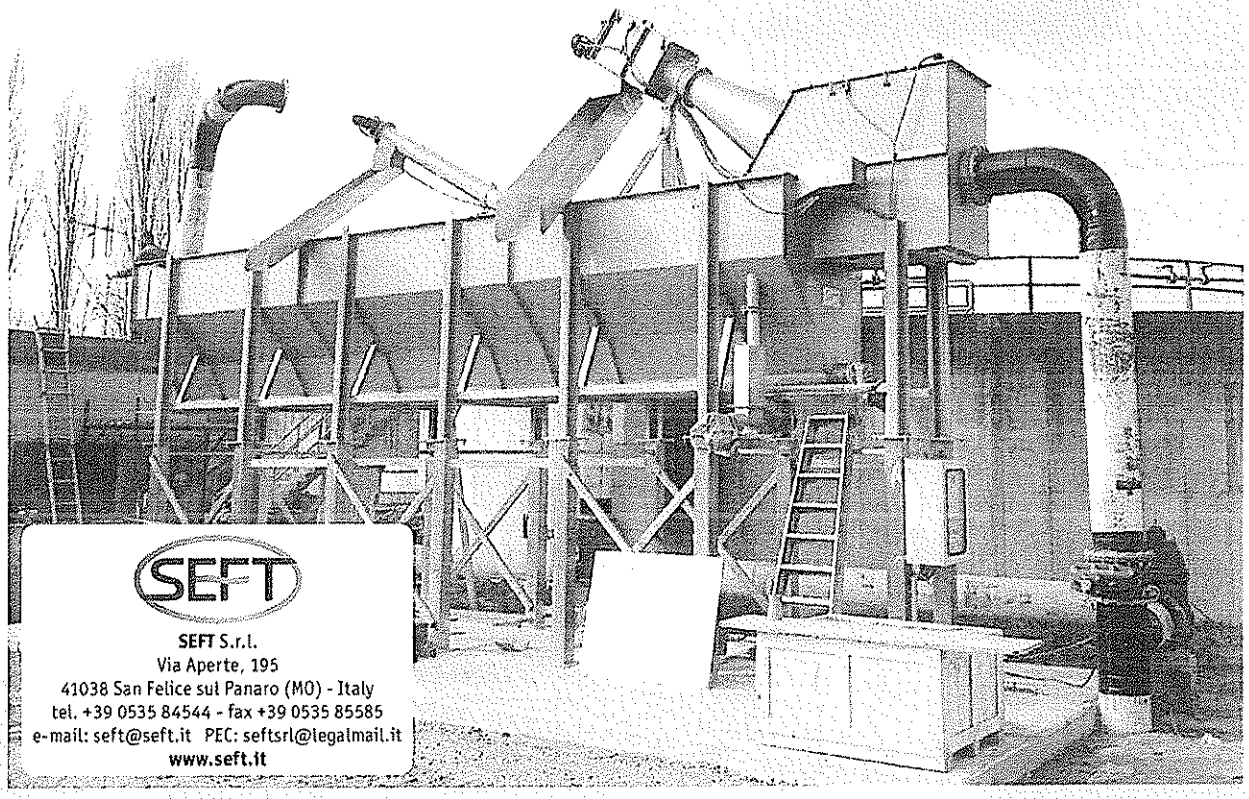

SEFT S.r.l.
Via Aperte, 195
41038 San Felice sul Panaro (MO) - Italy
tel. +39 0535 84544 - fax +39 0535 85585
e-mail: seft@seft.it PEC: seftsrl@legalmail.it
www.seft.it

I dati riportati nel presente catalogo non sono impegnativi e possono subire variazioni in qualsiasi momento.
Rights reserved to modify technical specifications.

3/12/18

GDF/D 30 Combined wastewater pre-treatment unit

This combined machine is fed by a pump or to gravity, through a fixed pipe.
The effluent passes through a screw screen that removes the most large solid particles, then goes to a sedimentation tank where the particles sedimented are then removed by a system of scews.
As an option you can install the system for removal of fats and suspended oils.

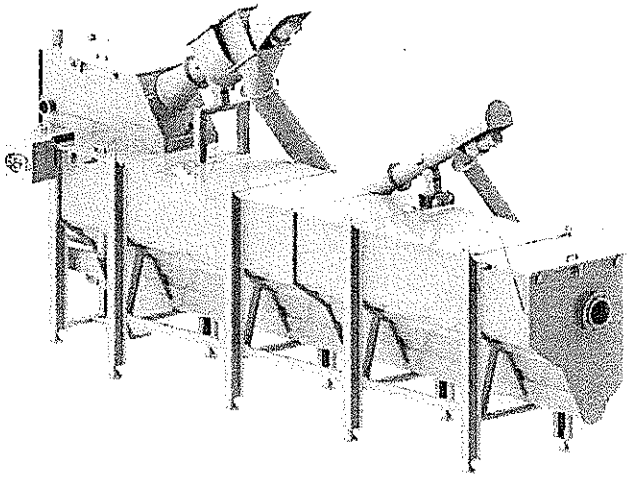

Inlet Flow = 30 l/s

Average characteristics of reference for wastewater: TSS = 500 ppm, sand content 0,5%

Average performances: efficiency up to 90% for sand removal of particles > 200µm and density above 1,65 Kg/dm3.

Screenings weight and volume reduction: up to 30-40%

Screw screen FCP/C 50 with compaction:
Loading basket diameter: **Ø456 mm**
Screw diameter for transport / compaction: Ø219 mm
Filtration type: rounded holes
Dimension: **Ø6 mm**
Inclination: 35°
Squared outlet spout for screening discharge
Basket cleaning through nylon bolted brushes
Motor 1,1 kW, 400V – 50Hz – 3 phases, 4 poles, IP55, F class
Gear reducer, endless screw, 11 rpm

Sand settling tank
Horizontal screw conveyor and sand transport mod. TSA 200
Shaft less screw diameter: Ø180mm
High carbon steel single profile, pitch 1/1, thick. 20mm
With mechanical water tight group.
Motor 0,55 kW, 400V – 50Hz – 3 phases, 4 poles, IP55, F class
Gear reducer, endless screw, 5 rpm

3/12/18

Pull execution
Sand extraction screw conveyor mod. TSA"T" 168
Shaft less screw diameter: Ø168mm
High carbon steel single profile, pitch 1/1, thick. 20mm
With mechanical water tight group.
Motor 0,37 kW, 400V – 50Hz – 3 phases, 4 poles, IP55, F class
Gear reducer, endless screw, 5 rpm
Pull execution

Air blowing system

External structure in stainless steel AISI316 L
Tanks in stainless steel AISI316 L
Shaft less spirals in high carbon steel painted RAL6029
Bolts in A2
Anti-wear material: bolted plates in stainless steel AISI316 L
Inlet: alum. DN250 PN10
Outlet: alum. DN250 PN10
Degreasing outlet: Flanged alum. DN100 PN10

Grease / Oil removal "go & back carriage" system
Motor 0,37 kW, 400V – 50Hz – 3 phases, 4 poles, IP55, F class

Overall dimensions:
Total length: 7.000 mm
Settling tank length: 6.000 mm
Total width: 1.420 mm
Total height after installation: 3.050 mm

Including:
Heating system kit for compaction zone (suitable for use up to 0°C)
Heating system kit for transport zone (suitable for use up to 0°C)
Washing system on compaction zone with manual valve
PE breathing valve on screw screen tank
Discharging chutes for screenings in AISI316 L (LENGTH = 2000 mm)
PE pipe for returning liquid of compaction zone
Rod level sensor on screw screen tank
Safety limit-switches for opening hatches
Warning stickers on unit parts at risk of intrusion
Eyebolts

Not included:
Control panel & wiring connection
Hydraulic connections
Electrical air blower
Potential scaffolding

Consumption:
Water for compaction washing system: 0.5 lt./sec. @ max 5bar
Compressed air for air blowing system: 25 Nm3/h @ 0.15bar

Test:
Running test with empty tanks in our workshop
Settling tank filling with clear water for water tight test

3/12/18

C

OPTIONS

BYPASS internal with static bars
Structure in stainless steel AISI304L
Bars material: bolted plates in stainless steel AISI304 L
Bars spacing: 15 mm
Bar thickness: 30 x 8 mm
Bar inclination : 75 °

Control panel
PLC Protection degree IP65, 400 V
In fiberglass with buttons at sight + Emergency button
Manual start/stop and automatic cycle start/stop selectors
Warning lights for: line presence, machine running, thermal alarm
Documentation: control panel electrical diagram + CE conformity declaration
Predisposition for remote control for start/stop with thermal alarm signal
Wiring included
Ventilation (if necessary)
Heating included
Consumption and working hours
Communication card for industrial protocol included

Electrical Blower
Flow rate: 25 m3/h
Pressure: 150 mbar
Motor: 0,25 kW 380V, 50hz, 3phases, IP55 grade, F class
1" fitting
Side installation, with stainless steel hoses
Retention valve, Suction filter, Pressure valve
Wiring and installation included

Grease Pump
Brand: SYDEX
Flow rate: 400 lt/h (90rpm)
Pressure: 4 bar
Motor: 1,1 kW, 2,45A, 380V, 50hz, 3phases, IP55

3/12/18

REV.01	Allungato coclea estrattrice di 549mm	LUCA	26/05/2014
REV.02	Aggiornato vista laterale	LUCA	28/06/2014
REV.03	Inserito dall'alto la vista della sezione tubo degrassatore	LUCA	14/07/2014

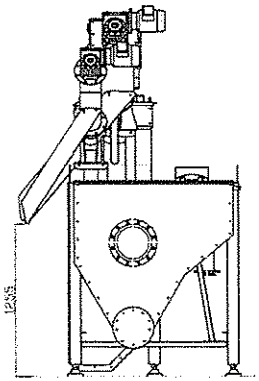

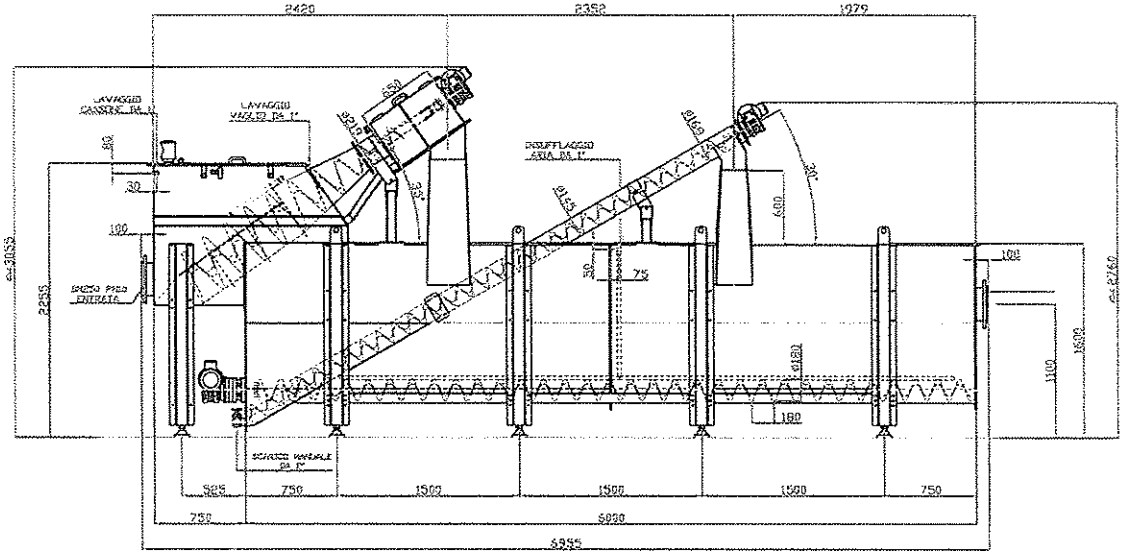

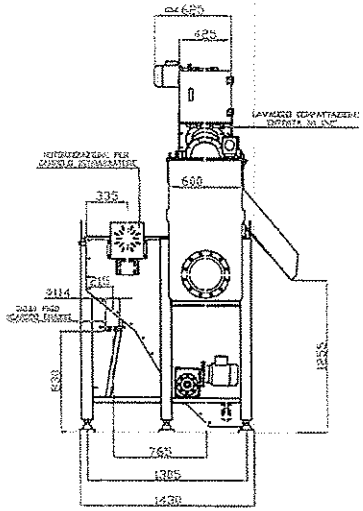

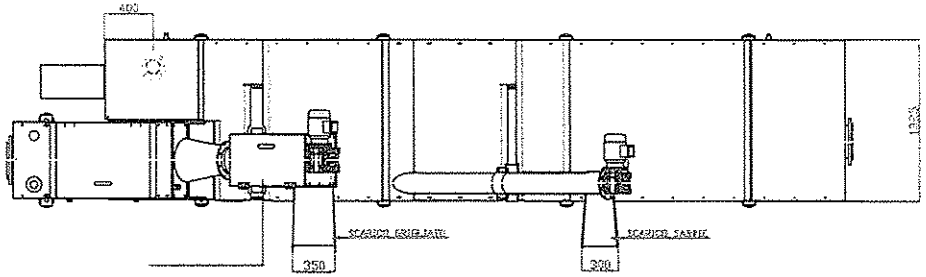

	Grado di Finitura Superficiale: ▽( )	Materiale: AISI - FE	Codice Pezzo: GDF-D 30L.	
			Trattamento:	Codice Progetto: 111_13
Scala: 1:1	Foglio:	DENOMINAZIONE:	Peso: Kg.	Colore :	Disegnato da: Luca	Data: 29/02/2012
Quote senza indicazione di tolleranza grado di precisione medio secondo UNI EN 22768 fori tolleranza+ /alberi tolleranza –					Modificato da: Luca	Data: 14/07/2014
SE. F. T. srl via Aperte,360 41038 S.F. sul Panaro (Mo) www.seftit seft@seftit		GDF-D 30L. L.6000 – CON FCPC50 A DX – ESTRATTRICE Ø168 – SISTEMA DI DEGRASSATURA			Codice disegno: GDF-D 30L.	

Questo disegno non puo'essere trasmesso a terzi senza autorizzazione di SE.F.T. srl

TÜV NORD

CERTIFICATE

Management system as per
EN ISO 9001 : 2008

In accordance with TÜV NORD CERT procedures, it is hereby certified that

SEFT S.r.l.
Via Aperte, 195
41038 San Felice Sul Panaro (MO)
Italy

applies a management system in line with the above standard for the following scope

Design, manufacture and sale of machinery for civil and industrial purification and customised equipments for industrial plants.

Certificate Registration No. 44 100 134722
Audit Report No. IT-14670/2016

Valid from 2016-06-05
Valid until 2018-09-14
Initial certification 2013

Certification Body
at TÜV NORD CERT GmbH

Bologna, 2016-05-27

This certification was conducted in accordance with the TÜV NORD CERT auditing and certification procedures and is subject to regular surveillance audits.

TÜV NORD CERT GmbH Langemarckstraße 20 45141 Essen www.tuev-nord-cert.com

DAkkS
Deutsche
Akkreditierungsstelle
D-ZM-12007-01-01

3/12178

5. BIOLOGICAL TREATMENT PROCESS

3/12/18

5.2 PREDENITRIFICATION TANK

3|12|18

WILO SE, Werk Hof
Heimgartenstraße 1-3
Postfach 3309 - D-95030 Hof/Saale
T: +49 9281 974-540 F: +49 9281 974-133
ctwwt@wilo.com www.wilo.com

Mixer data sheet

ID	17-ORH-GR-AB-1-0001
Project country	Greece
Project name	WWTP MONDENEGRO
Position	1 Anoxic tank
Date	2017-09-01
Enquiry	

Data for selection

Mixed liquid

Kind	Activated sludge	
Density	1000	kg/m³
pH value	7	
Temperature	20	°C
Dry solids content	0,5	%
Flow behaviour	Newton flow	
Kind of thickening	None	
Additional thickener	No	

Solids

Origin	Municipal	
Kind	Not determined	
Solid size	Not determined	

Mixing task

Operating mode	Continuous	
Mixing task	Suspend	
Average calculated flow velocity[1]	0,3	m/s

Tank

Material	Concrete	
Outlet	On bottom, laterally at the tank edge	
Tank shape	Rectangular tank	
Tank volume	363	m³
Vertical / inclined walls	Tank with vertical walls	
Length on upper edge	13,2	m
Width on upper edge	5,5	m
Tank height	5	m
Maximum filling level	5	m
Minimum filling level	5	m
Relevant filling level	5	m

Preparation

Preparation	Screen with gap width < 10 mm, but no pre-clarification

3/12/18

WILO SE, Werk Hof
Heimgartenstraße 1-3
Postfach 3309 - D-95030 Hof/Saale
T: +49 9281 974-540 F: +49 9281 974-133
ctwwt@wilo.com www.wilo.com

Mixer data sheet

ID	17-ORH-GR-AB-1-0001
Project country	Greece
Project name	WWTP MONDENEGRO
Position	1 Anoxic tank
Date	2017-09-01
Enquiry	

Aeration

Kind: Without

Tank particularities

Default

Remarks regarding the selection process

The mixing result depends on the functional quality of the plant equipment in the mechanical treatment stage (preliminary treatment). Mineral fractions (grit and sand) must be always excluded from the process and cannot be kept in suspension. It is absolutely required to check the values mentioned above with the actual values on site.

31/12/18

WILO SE, Werk Hof
Heimgartenstraße 1-3
Postfach 3309 - D-95030 Hof/Saale
T: +49 9281 974-540 F: +49 9281 974-133
ctwwt@wilo.com www.wilo.com

ID	17-ORH-GR-AB-1-0001
Project country	Greece
Project name	WWTP MONDENEGRO
Position	1 Anoxic tank
Date	2017-09-01
Enquiry	

Selection of submersible mixers

Proposal

Type	TR 50-2.34-4/12 S	
Quantity	1	
Frequency	50	Hz
Rated power	4,5	kW
Propeller speed	338	1/min
Power factor (ISO 21630)	220	N/kW
Propeller diameter	0,5	m
Maximum power input	5,8	kW
Power input in duty point	*1 4,4	kW
System-dependent power input	*2 4,4	kW
Power density	*3 12,1	W/m³
System-dependent power density	*4 12,1	W/m³
Distance to water surface	0,9	m

*1 Measurement at static thrust acc. to ISO 21630 (inflow velocity ~0, Open Sea conditions).
*2 The power consumption of the mixer will be reduced in proportion to the flow velocity which is generated in the tank.
*3 According to ISO 21630.
*4 According to site conditions.

Important note

Installation of the mixer(s) according to installation sketch. Before installing the mixers, the up-to-date tank plans must be submitted without previous request to WILO SE, Hof for revision.

To guarantee a continuous operation, the minimum water cover above the propeller specified by WILO must be ensured.
Please check if our basic data are identical to your application and, if necessary, inform us in writing about modifications/objections.
The aforementioned mixer(s) selection data are integral part of our warranty, whereas our warranty comes only into effect, when the submersible mixers are installed according to our recommendation. Because the overall function depends considerably on the correct positioning of the submersible mixers, we will not accept any warranty claims which result from positioning which we did not approve explicitly. Also zones of weak flow due to the tank geometry are not part of our warranty. The values of maximum power input, power input in the duty point and energy density are valid for clean water. Furthermore the use of our submersible mixers in patented procedures or under trade mark rights of third parties is excluded from our liability.

[1]In case of rectangular or round tanks the average flow velocity above the tank section cannot be guaranteed.
For the selected tank shape no directed circulating flow can be generated for physical reasons. The calculated average flow velocity refers only to an undirected turbulent flow.

All attached notes relating to the product and the selection are part of the technical selection of WILO SE.

3192/18

WILO SE, Werk Hof
Heimgartenstraße 1-3
Postfach 3309 - D-95030 Hof/Saale
T: +49 9281 974-540 F: +49 9281 974-133
ctwwt@wilo.com www.wilo.com

Installation proposal

ID	17-ORH-GR-AB-1-0001
Project country	Greece
Project name	WWTP MONDENEGRO
Position	1 Anoxic tank
Date	2017-09-01
Mixer	TR 50-2.34-4/12 S
Enquiry	

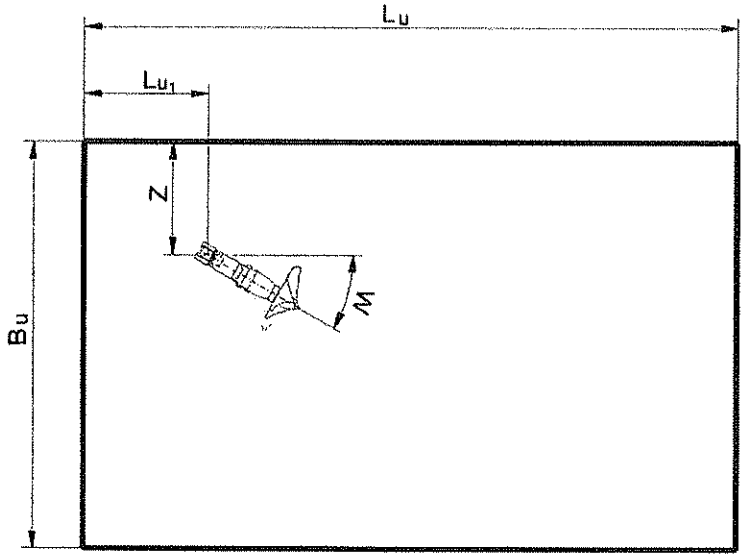

Installation recommendation regarding to miscellaneous minimum distances

n *	1	
Bu	5,5	m
Z	0,4	m
NI *	1	

Lu	13,2	m
Lu1	3,3	m
W	0	°

* n = no. of mixer per tank, NI = no. of installation positions per tank

3/12/18

WILO SE, Werk Hof
Heimgartenstraße 1-3
Postfach 3309 - D-95030 Hof/Saale
T: +49 9281 974-540 F: +49 9281 974-133
ctwwt@wilo.com www.wilo.com

Installation proposal

ID	17-ORH-GR-AB-1-0001
Project country	Greece
Project name	WWTP MONDENEGRO
Position	1 Anoxic tank
Date	2017-09-01
Mixer	TR 50-2.34-4/12 S
Enquiry	

Hints

The enclosed installation proposal is a schematic drawing and not according to scale. It serves as orientation guide. In case of order, the feasibility of this installation has to be matched with the tank drawing and the actual conditions. If there is an inflow and/or outflow in the immediate vicinity of the mixer, the mixer position must be checked based on updated tank plans to avoid bad influences on the mixer and short-circuit flows.

31/12/18

Abmessungen für Tauchmotorrührwerk
UNIPROP TRE 50-2

Dimensions of Submersible mixer **UNIPROP TRE 50-2**

Dimensions du circulateur immergé **UNIPROP TRE 50-2**

wilo
Heimgartenstraße 1-3 D-95030 Hof/Saale
Telefon +49 9281 974-0 Fax +49 9281 96528
www.wilo.com E-Mail: info@wilo.com

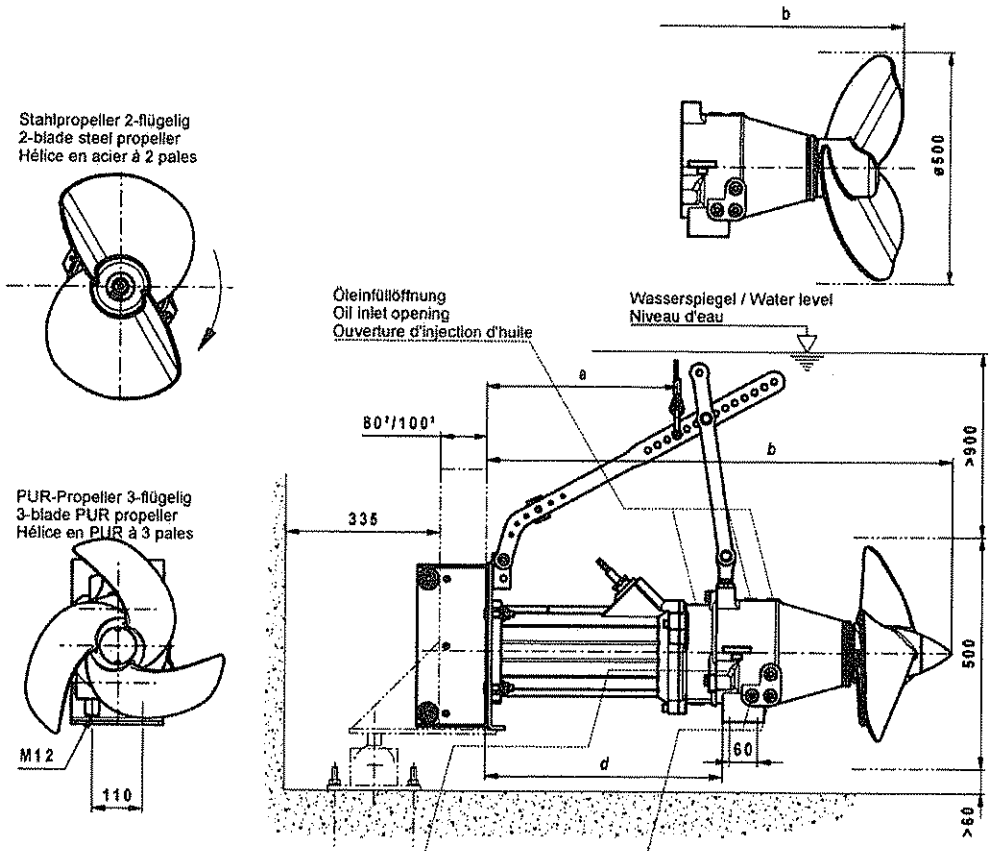

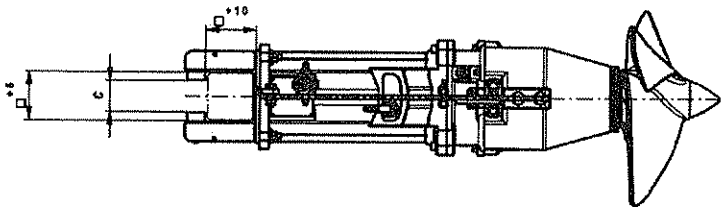

250kg-Hilfshebevorrichtung für alle Typen vorsehen!
Include auxiliary lifting device 250kg for all types!
A prévoir le dispositif auxiliaire de levage 250kg pour tous les types!

Motor / Motor type / Type de moteur	.../12		.../16		.../24
Führungsrohr Guide pipe / Tube de guidage	80x80	100x100	80x80	100x100	100x100
c	50	70	50	70	70
d	400	400	440	440	520

Motor / Motor type / Type de moteur	.../12	.../16		.../24	
Propeller / Propeller / Hélice	3-fl. PUR	3-fl. PUR	2-fl. 1.4571	3-fl. PUR	2-fl. 1.4571
a	xxx	xxx	xxx	xxx	xxx
b	890	930	900	1010	980
max. Gewicht / Weight / Poids	150 kg	160 kg	170 kg	176 kg	186 kg

Maßstab: 1:15 Technische Änderungen vorbehalten - Technical changes reserved - Modifications techniques réservées

Datum: 19.10.16 VM

Mb058.prt

3172118

Pioneering for You

Data sheet
Wilo-EMU TR 50-2.34-4/12 S

Design / Direction of rotation

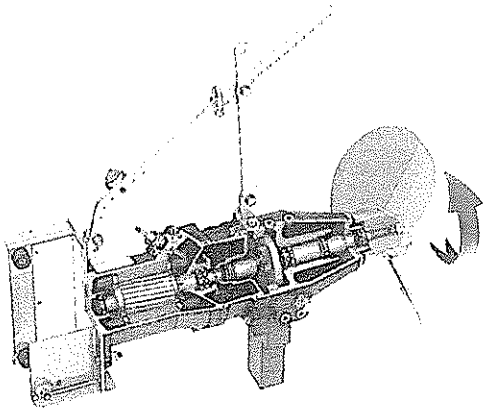

Technical data	
Unit	
Power consumption $P_{1.1}$	4.4 kW
Max. thrust F	970 N
Weight of unit m	118 kg
Max. weight* m	155 kg
Protection class	IP 68
Explosion protection	ATEX, FM
Ex classification ATEX	II 2G EEx d IIB T4
Ex classification FM	CLASS I, DIV. 1, GROUPS C, D; CLASS II, DIV. 1, GROUPS E, F, G; CLASS III

* = maximum weight including accessories

Propeller	
Propeller model	2-blade propeller with self-cleaning hub; backward-curved as a result clogging- and entwining-free
Nominal propeller diameter	500 mm
Propeller speed n	338 rpm
Transmission ratio	4.25
Fill quantities and types	
Filling prechamber	CLP transmission oil, ISO VG 220
Filling volume prechamber V	1.2 l
Filling gear chamber	CLP transmission oil, ISO VG 220
Fill quantity gear chamber V	0.5 l
Filling sealing chamber	White oil
Fill level sealing chamber V	1.1 l

Motor data	
Type of motor	T 17-4/12R (Ex)
Motor type	Submersible motor according to DIN/VDE 0530 (IEC 34)
Mains connection	3~400 V, 50 Hz
Rated current I_N	9.4 A
Starting current - direct I_A	47 A
Starting current - star-delta I_A	16 A
Power consumption P_1	5.8 kW
Rated power P_2	4.5 kW
Rated speed n	1405 rpm
Motor efficiency level	-
Efficiency η_M	78.0 %
Power factor $\cos \varphi$	0.89
Fluid temperature T	+3 ... +40 °C
Max. immersion depth	20 m
Insulation class	H
Max. switching frequency t	15 /h
min. switching break t	3 min
Starting torque M	67 Nm
Moment of inertia	0.0108 kg/m^2
Motor bearings	1 grooved ball bearing, 1 two-row inclined ball bearing
Materials	
Motor housing	EN-GJL-250
Motor shaft	1.4021
Gear housing	EN-GJL 250
Planetary gear	1.7131
Hollow gear	1.5216
Sun gear	1.7131
Output shaft	1.4462
Static seal	FPM
Sealing on pump side	SiC/SiC
Seal, gear chamber/prechamber	FPM
Seal, gear/sealing chamber	SiC/SiC
Sealing on motor side	FPM
Propeller	1.4571
Gear	
Gear construction type	m 2.0 as per DIN 780/P10 (ISO 54); Sun and planetary gears case hardened and sanded, internal gear butt-jointed
Gear bearings	Three needle roller bearing (planetary), one two-row inclined ball bearing and one grooved ball bearing (output shaft)
Service life L_{h10}	> 100000 operating hours, ISO 281

3/12/18

5.3 CIRCULATING ACTIVATED SLUDGE TANK

3/12/18

FLYGT
a xylem brand

Project data

MIDS 9.1.14 PRO

Project name	
Case name	
Proposal number	
Customer	
Contact	
Selection by	/9/6/17
Comments	

Input Data

Wastewater > Biological Treatment

Aerobic - Aeration
Pre-treatment > No screening or screen >10 mm
Outlet location in tank Top
Type of Diffuser 9" Sanitaire
Diffusers per aerated area 0.1 #/m2
Flow per diffuser 4 Nm3/h
(note that the aeration losses are estimated)
Covered Bottom Area 5 %
Number of Aerated Zones 2 no.

Tank dimensions

Racetrack / Circular bend

Length of middle wall	21.00 m	Depth	5.00 m
Width	4.50 m	Central Guidevanes	

Product data

Number of mixers	**2**				
Mixer type	**4410**	**without jetring**			
Propeller code	**400**	**Polyurethane**			
Nominal thrust	1910	N	Frequency	50	Hz
Rated shaft power	2.30	kW	Phases	3	
Max input power	3.10	kW	Poles	4	
Propeller diameter	2.50	m	Approval	STD	
Propeller speed	27	rpm	Rated temperature	40 °C / 104 °F	
Thrust produced/mixer	1359	N	(2717 N total thrust produced)		
Power uptake/mixer	1.78	kW	(57% of max input power)		
Total thrust required	2598	N			
Recom. Min submergence	0.48	m	(Surface to propeller tip)		

For mixer performance tolerances, refer to the mixer data chart.
Xylem guarantees that the proposed mixer selection will perform the specified duty when all mixers are operating positioned according to Xylem's recommendation. The selection is a function of the input data and the supplier of the data is fully responsible for its correctness.

3/9/18

Technical Specification

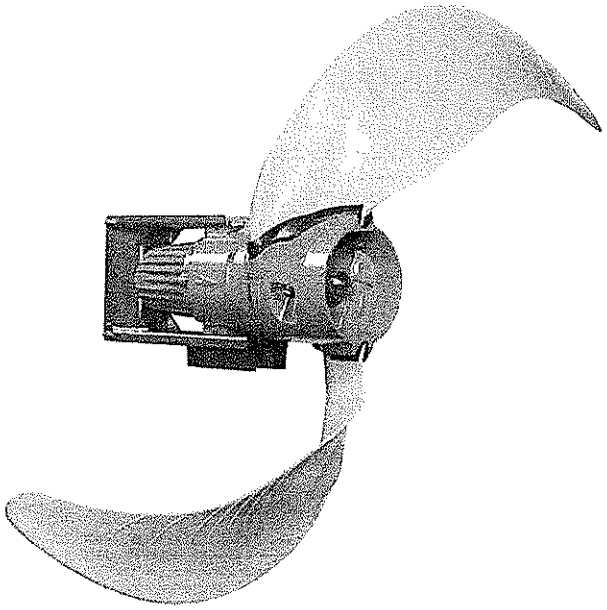

Flygt SR 4410, SR 4430, SR 4460, 50 Hz

FLYGT
a xylem brand

3/12/18

1 Technical specification

1.1 Product description

Usage

Mixer intended for mixing liquid and sludge containing fibers and solids where very high thrust in relation to consumed power is wanted. The mixer is designed to be operated completely immersed in the liquid.

Denomination

Standard version	Explosion proof version
4410.011	4410.090
4430.010	4430.090
4460.010, 4460.020	4460.090

Hydraulic unit

Thin-sectioned, non-clogging, backswept propeller with double-curved blades.

Installation

Tripod guide bar system, 100×100 mm (4×4 in), or 100×150 mm (4×6 in)

Monitoring equipment

- Thermal contacts opening at 125°C, (257°F)
- 4460.020: Thermal contacts opening at 140°C, (284°F)
- Leakage sensor in stator housing (FLS), optional
- Leakage sensor in oil housing (CLS), optional. CLS is not applicable to Ex-approved products.
- 4460.020: Leakage sensors are not available.

Cables

SUBCAB® heavy-duty submersible cable

Materials

Item	Material
Gear housing	Cast iron, ASTM 35B
Stator housing	Cast iron, ASTM 35B
Oil housing	Cast iron, ASTM 35B
Shaft	Stainless steel, ASTM/AISI 431
Propeller blades	Reinforced polyurethane plastic
Hub	Cast iron, ASTM 35B
Lifting device	Stainless steel ASTM 316L
Stand unit	Stainless steel ASTM 316L
Oil, oil housing	Paraffin oil ISO VG32
Oil, gear housing	• Mineral oil with additives, viscosity close to ISO VG 220 • 4460 optional configuration up to 60°C (140°F): Mineral oil with additives, viscosity close to ISO VG 680
O-rings	Nitrile rubber

Surface treatment

Two-component top coating on primer.

3/12/18
e

- Standard version
- Optional corrosion resistant version
- Optional MBBR wear resistant version

Color: Navy Gray on cast iron parts.

Shaft seals

Inner seals	Outer seal
Lip seals	Corrosion resistant cemented carbide (WCCR) / WCCR

Options and accessories

- Installation systems
- Lifting equipment
- Special cables
- Zinc anodes
- Electrical equipment such as control panels, monitoring equipment, variable frequency drives

Dimensions and weight

See the dimensional drawing.

1.2 Application limits

Data	Description
Liquid temperature	Maximum 40°C (104°F) 4460: Optional configuration up to 60°C (140°F)
Liquid viscosity	Maximum 5000 cp
pH of the mixed liquid	6–11
Depth of immersion	Maximum 20 m (65 ft)

1.3 Motor data

Feature	Description
Motor type	4410: Squirrel-cage 4- or 6-pole induction motor 4430: Squirrel-cage 2- or 4-pole induction motor 4460: Squirrel-cage 2- or 4-pole induction motor
Frequency	50 Hz
Supply	3-phase
Starting method	• Direct on-line • Star-delta • VFD
Maximum starts per hour	30 evenly-spaced starts per hour
Voltage variation	• Continuously running: Maximum ±5% • Intermittently running: Maximum ±10%
Voltage imbalance between the phases	Maximum 2%
Stator insulation	In accordance with class H (180°C, 356°F), trickle impregnated

3/12/18

1.4 Motor Rating

Table 1: 400V, 50 Hz, 3-phase

Product	Propeller diameter, maximum mm	Rotations per minute, rpm	Poles	Rated Power, kW	Rated Current, A	Starting Current, A	Power factor cosφ
4410	2500	1385	4	2.3	5.5	24	0.82
4410	2500	930	6	0.9	2.7	10	0.67
4430	2500	1420	4	4.3	9.1	38	0.84
4430	1600	2875	2	4.4	8.5	65	0.92
4460.010/090	2500	1455	4	5.7	12	78	0.84
4460.010/090	1300	2900	2	7.5	14	116	0.91
4460.020	1300	2930	2	12.0	22	213	0.86

1.5 Thrust data

Performance measurement standard

Performance according to ISO 21630:2007.

SR 4410

Table 2: 4-pole 3-phase, 2.3 kW, 2-bladed propeller (1 of 2)

Speed, rpm	Diameter: 1.4 m			Diameter: 1.5 m			Diameter: 1.6 m			Diameter: 1.7 m		
	F_{thrust} N	P_{in} kW	Prop. code	F_{thrust} N	P_{in} kW	Prop. code	F_{thrust} N	P_{in} kW	Prop. code	F_{thrust} N	P_{in} kW	Prop. code
26	410	0.70	447	510	0.77	446	620	0.84	445	720	0.90	444
28	470	0.79	407	590	0.87	406	710	0.95	405	830	1.04	404
30	550	0.92	457	700	1.03	456	840	1.14	455	980	1.24	454
32	640	1.05	417	800	1.19	416	960	1.32	415	1110	1.45	414
35	760	1.28	467	960	1.46	466	1150	1.64	465	1330	1.82	464
39	940	1.64	427	1170	1.90	426	1400	2.15	425	1610	2.40	424
41	1020	1.82	477	1270	2.11	476	1510	2.40	475	-	-	-
46	1240	2.39	437	-	-	-	-	-	-	-	-	-

Table 3: 4-pole 3-phase, 2.3 kW, 2-bladed propeller (2 of 2)

Speed, rpm	Diameter: 1.8 m			Diameter: 2.0 m			Diameter: 2.2 m			Diameter: 2.5 m		
	F_{thrust} N	P_{in} kW	Prop. code	F_{thrust} N	P_{in} kW	Prop. code	F_{thrust} N	P_{in} kW	Prop. code	F_{thrust} N	P_{in} kW	Prop. code
26	820	0.97	443	1050	1.11	442	1330	1.30	441	1690	1.42	440
28	940	1.12	403	1200	1.35	402	1510	1.53	401	1890	1.65	400
30	1110	1.35	453	1410	1.64	452	1760	1.87	451	2160	1.99	450
32	1260	1.59	413	1610	1.94	412	1980	2.22	411	2400	2.33	410
35	1500	1.99	463	1900	2.46	462	-	-	-	-	-	-

3/12/18
e

Table 4: 6-pole 3-phase, 0.9 kW, 2-bladed propeller (1 of 2)

Speed, rpm	Diameter: 1.4 m			Diameter: 1.5 m			Diameter: 1.6 m			Diameter: 1.7 m		
	F_{thrust} N	P_{in} kW	Prop. code	F_{thrust} N	P_{in} kW	Prop. code	F_{thrust} N	P_{in} kW	Prop. code	F_{thrust} N	P_{in} kW	Prop. code
17	180	0.37	647	230	0.39	646	280	0.41	645	320	0.43	644
19	210	0.40	607	260	0.42	606	320	0.45	605	370	0.48	604
20	250	0.44	657	310	0.48	656	380	0.51	655	440	0.54	654
22	280	0.49	617	360	0.53	616	430	0.57	615	500	0.61	614
24	340	0.56	667	430	0.62	666	520	0.67	665	600	0.73	664
26	420	0.69	627	530	0.76	626	640	0.84	625	740	0.91	624

Table 5: 6-pole 3-phase, 0.9 kW, 2-bladed propeller (2 of 2)

Speed, rpm	Diameter: 1.8 m			Diameter: 2.0 m			Diameter: 2.2 m			Diameter: 2.5 m		
	F_{thrust} N	P_{in} kW	Prop. code	F_{thrust} N	P_{in} kW	Prop. code	F_{thrust} N	P_{in} kW	Prop. code	F_{thrust} N	P_{in} kW	Prop. code
17	370	0.45	643	470	0.51	642	600	0.55	641	810	0.61	640
19	420	0.50	603	540	0.57	602	680	0.62	601	920	0.70	600
20	500	0.57	653	630	0.67	652	800	0.73	651	1060	0.82	650
22	570	0.65	613	720	0.77	612	910	0.85	611	1190	0.95	610
24	680	0.78	663	860	0.93	662	1080	1.05	661	1390	1.16	660
26	830	0.99	623	-	-	-	-	-	-	-	-	-

SR 4430

Table 6: 4-pole 3-pahse, 4.3 kW, 2-bladed propeller (1 of 2)

Speed, rpm	Diameter: 1.4 m			Diameter: 1.5 m			Diameter: 1.6 m			Diameter: 1.7 m		
	F_{thrust} N	P_{in} kW	Prop. code	F_{thrust} N	P_{in} kW	Prop. code	F_{thrust} N	P_{in} kW	Prop. code	F_{thrust} N	P_{in} kW	Prop. code
26	410	0.68	447	520	0.75	446	630	0.82	445	740	0.89	444
28	480	0.77	407	600	0.85	406	730	0.94	405	850	1.02	404
31	570	0.90	457	720	1.01	456	860	1.12	455	1010	1.23	454
33	650	1.03	417	820	1.17	416	990	1.31	415	1160	1.44	414
36	790	1.26	467	990	1.45	466	1200	1.63	465	1400	1.81	464
40	980	1.63	427	1240	1.89	426	1490	2.15	425	1730	2.40	424
42	1070	1.81	477	1350	2.10	476	1620	2.40	475	1880	2.69	474
47	1330	2.40	437	1670	2.81	436	2000	3.22	435	2320	3.63	434

Table 7: 4-pole 3-pahse, 4.3 kW, 2-bladed propeller (2 of 2)

Speed, rpm	Diameter: 1.8 m			Diameter: 2.0 m			Diameter: 2.2 m			Diameter: 2.5 m		
	F_{thrust} N	P_{in} kW	Prop. code	F_{thrust} N	P_{in} kW	Prop. code	F_{thrust} N	P_{in} kW	Prop. code	F_{thrust} N	P_{in} kW	Prop. code
26	840	0.95	443	1080	1.14	442	1370	1.29	441	1740	1.40	440
28	970	1.10	403	1250	1.33	402	1570	1.52	401	1970	1.63	400
31	1150	1.34	453	1480	1.63	452	1850	1.86	451	2270	1.97	450
33	1320	1.58	413	1700	1.94	412	2110	2.21	411	2550	2.31	410
36	1590	1.99	463	2040	2.46	462	2510	2.81	461	2960	2.86	460

3/12/18

Speed, rpm	Diameter: 1.8 m			Diameter: 2.0 m			Diameter: 2.2 m			Diameter: 2.5 m		
	F_{thrust} N	P_{in} kW	Prop. code	F_{thrust} N	P_{in} kW	Prop. code	F_{thrust} N	P_{in} kW	Prop. code	F_{thrust} N	P_{in} kW	Prop. code
40	1970	2.65	423	2530	3.31	422	3060	3.76	421	3500	3.68	420
42	2140	2.98	473	2740	3.73	472	3300	4.21	471	3720	4.06	470
47	2630	4.04	433	-	-	-	-	-	-	-	-	-

Table 8: 2-pole 3-phase, 4.4 kW, 2-bladed propeller

Speed, rpm	Diameter: 1.4 m			Diameter: 1.5 m			Diameter: 1.6 m		
	F_{thrust} N	P_{in} kW	Prop. code	F_{thrust} N	P_{in} kW	Prop. code	F_{thrust} N	P_{in} kW	Prop. code
52	1590	3.20	247	2000	3.75	246	2400	4.30	245
55	1820	3.83	207	-	-	-	-	-	-

SR 4460

Table 9: 4-pole 3-phase, 5.7 kW, 2-bladed propeller (1 of 2)

Speed, rpm	Diameter: 1.7 m			Diameter: 1.8 m			Diameter: 2.0 m		
	F_{thrust} N	P_{in} kW	Prop. code	F_{thrust} N	P_{in} kW	Prop. code	F_{thrust} N	P_{in} kW	Prop. code
36	1420	2.09	464	1620	2.27	463	2090	2.74	462
41	1770	2.68	424	2020	2.93	423	2610	3.59	422
42	1930	2.97	474	2210	3.26	473	2850	4.01	472
47	2410	3.91	434	2740	4.32	433	3530	5.38	432

Table 10: 4-pole 3-phase, 5.7 kW, 2-bladed propeller (2 of 2)

Speed, rpm	Diameter: 2.2 m			Diameter: 2.5 m		
	F_{thrust} N	P_{in} kW	Prop. code	F_{thrust} N	P_{in} kW	Prop. code
36	2580	3.09	461	3030	3.12	460
41	3170	4.03	421	3600	3.93	420
42	3440	4.48	471	3850	4.30	470
47	4200	5.92	431	4500	5.38	430

Table 11: 2-pole 3-phase, 7.5 kW, 3-bladed propeller

Speed, rpm	Diameter: 1.3 m		
	F_{thrust} N	P_{in} kW	Prop. code
69	3000	8.50	289

Table 12: 2-pole 3-phase, 12 kW, 3-bladed propeller

Speed, rpm	Diameter: 1.3 m		
	F_{thrust} N	P_{in} kW	Prop. code
80	4000	13.00	219

3/19/18

Xylem |'zīləm|

1) The tissue in plants that brings water upward from the roots
2) A leading global water technology company

We're a global team unified in a common purpose: creating innovative solutions to meet our world's water needs. Developing new technologies that will improve the way water is used, conserved, and re-used in the future is central to our work. We move, treat, analyze, and return water to the environment, and we help people use water efficiently, in their homes, buildings, factories and farms. In more than 150 countries, we have strong, long-standing relationships with customers who know us for our powerful combination of leading product brands and applications expertise, backed by a legacy of innovation.

For more information on how Xylem can help you, go to xyleminc.com

Refer to www.xylemwatersolutions.com/contacts/ for contact details of your local sales and service representative.

xylem
Let's Solve Water

Xylem Water Solutions Global Services AB
361 80 Emmaboda
Sweden
Tel: +46-471-24 70 00
Fax: +46-471-24 47 01
http://tpi.xyleminc.com

Visit our Web site for the latest version of this document and more information

The original instruction is in English. All non-English instructions are translations of the original instruction.

© 2012 Xylem Inc

882632_5.0_en-US_2015-07_TS_4410_4430_4460_50Hz

3/12/18

DNV·GL

MANAGEMENT SYSTEM CERTIFICATE

Certificate No:	Initial certification date:	Valid:
2007-SKM-AQ-2512 / 2007-SKM-AE-1239	13, June, 2007	31, December, 2016 -15, September, 2018

This is to certify that the management system of

Xylem Europe

Bleicheplatz 6, 8200 SCHAFFHAUSEN, Switzerland
and the sites as mentioned in the appendix accompanying this certificate

has been found to conform to the Management System standards:
ISO 9001:2008/ ISO 14001:2004
(See specification in Appendix)

This certificate is valid for the following scope:
Providing water, wastewater and fluid technologies and solutions including associated parts and services.

Place and date:
Solna, 21, December, 2016

SWEDAC ACKREDITERING
1053
ISO/IEC 17021

For the issuing office:
DNV GL - Business Assurance
Box 6046/Hemvärnsgatan 9, 171 06,
Solna, Sweden

Ann-Louise Pått
Management Representative

Lack of fulfilment of conditions as set out in the Certification Agreement may render this Certificate invalid.
ACCREDITED UNIT: DNV GL Business Assurance Sweden AB, Box 6046, 171 06 Solna, Sweden. TEL: +46 8 587 940 00. http://assurance.dnvgl.com

31/12/18

Certificate No: 2007-SKM-AQ-2512 / 2007-SKM-AE-1239
Place and date: Solna, 21, December, 2016

Appendix to Certificate

Xylem Europe GmbH
Locations included in the certification are as follows:

Site Name	Site Address	Site Scope	ISO 9001	ISO 14001
Headquarters				
Xylem Europe GmbH	Bleicheplatz 6, 8200 SCHAFFHAUSEN, Switzerland	Management, Business Development, Marketing and Procurement of Pumping, Mixing, Monitoring & Control Systems, Aeration Systems, integrated treatment systems and associated parts and services.	X	X
Service and manufacturing companies				
Xylem Manufacturing Austria GmbH	Ernst Vogel Straße 2, 2000 STOCKERAU, Austria	Manufacturing of pumps, control units, pumping stations and booster units. Production of general machinery items.	X	X
Xylem Service Austria GmbH	Ernst Vogel Straße 2, 2000 STOCKERAU, Austria	Design of pumps, control units, pumping stations and booster units. Marketing of monitoring and control units. Technical engineering support (intercompany) and customer training for pump units.	X	X
Xylem Water Solutions Metz SAS	Rue Marcel Dassault, F-57365 ENNERY, France	Distribution and Stockholding of Pumping and Mixing Systems and associated parts and products.	X	
Xylem Water Solutions Herford GmbH	• Boschstr. 4 – 14, 32051 HERFORD, Germany • Ruhrtalstraße 94, ESSEN, Germany	Manufacturing of components and systems for water treatment using UV-light and ozone technology and of UV-lamps including commissioning.	X	X
Xylem Services GmbH	Boschstr. 4 – 14, 32051 HERFORD, Germany	Research, Development and Sales of components and systems for water treatment using UV-light and ozone technology and of UV-lamps including commissioning and technical service.	X	X

3/12/18

Certificate No: 2007-SKM-AQ-2512 / 2007-SKM-AE-1239
Place and date: Solna, 21, December, 2016

Xylem Service Hungary Kft.	2700, CEGLÉD, Külső-Kátai 41, Hungary	Design and sales of: wet rotor circulators, condensate removal pumps and computer cooling pumps.	X	X
Xylem Water Systems Hungary Kft.	2700, CEGLÉD, Külső-Kátai 41, Hungary	Production of: wet rotor circulators, condensate removal pumps and computer cooling pumps.	X	X
Lowara Vogel Polska Sp. z o.o.	Ul. Kazimiera Wielkiego 5, 57100 Strzelin, Poland	Production of submersible pumps, hydraulic components, electrical motors, circulators and end suction pumps, by means of machining, welding, painting, assembly, testing and packaging.	X	X
Lowara S.r.l. Unipersonale	Via Dottor Vittorio Lombardi, 14 - 36075 MONTECCHIO MAGGIORE - Italy	Production of: SES (Sump Effluent and Sewage) pumps, centrifugal pumps, vertical and horizontal multistage, self-priming pumps, peripheral pumps, surface motors, prefabricated lifting station for waste water entrained solids, boosters in line pumps.	X	
Xylem Service Italia S.r.l.	Via Dottor Vittorio Lombardi, 14 - 36075 MONTECCHIO MAGGIORE - Italy	Design, trade, sales and services of: submersible deep well pumps, SES (Sump Effluent and Sewage) pumps, centrifugal pumps, vertical and horizontal multistage, self-priming pumps, peripheral pumps, submersible motors, surface motors, prefabricated lifting station for waste water entrained solids, boosters, in line pumps, circulators, frequency converters, filters, accessories for water pumping applications.	X	
Xylem Water Solutions Manufacturing AB	361 80 EMMABODA, Sweden	Manufacturing and Procurement of Pumping and Mixing Systems and associated parts and products.	X	X
Xylem Water Solutions Global Services AB	361 80 EMMABODA, Sweden	Management, Procurement, Distribution and Stockholding of Pumping and Mixing	X	X

3/12/18

Certificate No: 2007-SKM-AQ-2512 / 2007-SKM-AE-1239
Place and date: Solna, 21, December, 2016

		Systems and associated parts and products.		
Xylem Water Solutions Global Services AB	Gesällvägen 33, 174 87 SUNDBYBERG, Sweden	Management, Business Development, Product Development, Marketing and Procurement of Pumping, Mixing, Monitoring & Control Systems, Aeration Systems and associated parts and services.	X	X
Xylem Water Process Ltd	Bingley Road, HODDESDON, Herts, EN11 0BU, United Kingdom	Manufacture of: marine engine cooling pumps, flexible impeller pumps, rotary lobe pumps for the processing industry, general industrial customer requirements for the following industries, chemical, pharmaceutical, engineering, food and automotive. Air and electrical operated pumps for a variety of fluid handling systems in the beverage and food service markets.	X	X
Xylem Water Services Ltd	Bingley Road, HODDESDON, Herts, EN11 0BU, United Kingdom	Design and development of: marine engine cooling pumps, flexible impeller pumps, rotary lobe pumps for the processing industry, general industrial customer requirements for the following industries, chemical, pharmaceutical, engineering, food and automotive. Air and electrical operated pumps for a variety of fluid handling systems in the beverage and food service markets.	X	X
Xylem Water Services Ltd	Quenington Cirencester Gloucestershire GL7 5BX UK	Design of centrifugal pumping equipment and system packages.	X	
Xylem Dewatering Solutions UK Ltd	Quenington Cirencester Gloucestershire GL7 5BX UK	Manufacture of centrifugal pumping equipment and system packages.	X	

3/12/18

Certificate No: 2007-SKM-AQ-2512 / 2007-SKM-AE-1239
Place and date: Solna, 21, December, 2016

Sales companies				
Xylem Water Solutions Austria GmbH	• Ernst Vogel Straße 2, 2000 STOCKERAU, Austria • Haidestraße 41, 4600 WELS, Austria • Messerschmittweg 7a, 6175 KEMATEN, Austria	Sales, after sales, service and repair of pumps, control units, pumping stations and booster units. Technical engineering support for end users and customer training for pumps units.	X	X
Xylem Water Solutions France SAS	• Parc des Aqueducs Chemin du Favier CD 42, 69230 ST-GENIS-LAVAL, France • PARC de la Plaine, 13 Allee de la Briqueterie, 59493 VILLENEUVE DASCQ, France • 31 Rue D´Athenes, ZI les Estroublans 13127 VITROLLES, France • Route d´Ingremare, 27400 HEUDEBOUVILLE, France • ZI Magellan, 12 rue Eugene Chevreul, BP70177, 33607 PESSAC, France • ZAC de la Richardière - 12 rue Lépine, 35530 NOYAL SUR VILLAINE, France • Rue de l'Industrie, BP40425, 67412 ILLKIRCH, France • 8 allée Paul Harris, CS 62504, 31018 TOULOUSE CEDEX 2, France • Aéronef – Bat B 27, Rue de la Milletière, 37073 TOURS, France • 36 rue de Grande Bretagne cedex, 5805, 44470 CARQUEFOU CEDEX, France • Parc de L´Ile 29 Rue du Port, 92022 NANTERRE CEDEX, France	Marketing, Sales, Installation, Rental, Service and Maintenance of Pumps, Mixers, Monitoring & Control Systems, Aeration Systems, integrated treatment systems and associated parts and products.	X	
Xylem Water Solutions Deutschland GmbH	• Oststrasse 28, 22844 NORDERSTEDT, Germany • Bayernstraße 11, 30855 LANGENHAGEN, Germany	Marketing, Sales, Installation, Rental, Service and Maintenance of Pumps, Mixers, Monitoring & Control systems, Aeration Systems,	X	

31/12/18

Certificate No: 2007-SKM-AQ-2512 / 2007-SKM-AE-1239
Place and date: Solna, 21, December, 2016

		integrated treatment systems and associated parts and products.		
Xylem Water Solutions Nederland BV	Pieter Zeemanweg 240, 3316GZ DORDRECHT, Netherlands	Marketing, Sales, Installation, Rental, Service and Maintenance of Pumps, Mixers, Monitoring & Control Systems, Aeration Systems, integrated treatment systems and associated parts and products.	X	
Xylem Water Solutions Italia S.r.l	• Via G. Rossini 1/a - 20020 LAINATE - MI, Italy • Via Nicola Tridente, 22 - 70125 BARI - Italy • P.za Ruggeri, 3 - 09030 ELMAS - CA - Italy • Via Acicastello, 15/D - 95126 CATANIA - Italy • Centro Direzionale - Viale della, Costituzione, Is. A3 Sc. A - int.502-503 - 80143 NAPOLI - Italy • Centro Direzionale Benelli - Via Mameli, 42 int. 110-111 - 61100 PESARO - Italy • Via Sansovino, 217 - 10151 TORINO - Italy • Via Tito Speri 27/29 - 00040 POMEZIA -RM - Italy • Via Emilia Romagna, 23 - 35020 SAONARA-PD, Italy • Via G. pastore, 47 Zona artigianale di Viserba Monte - 47811 RIMINI - RN - Italy	Marketing, Sales, Installation, Rental, Service and Maintenance of Pumps, Mixers, Monitoring & Control Systems, Aeration Systems, integrated treatment systems and associated parts and products.	X	
Xylem Water Solutions Ireland Ltd	• 50, Broomhill Close Airton Road, DUBLIN, 24, Ireland • Unit 5 & 7 Hydepark Commercial Centre, 10 Hydepark Road, Mallusk, Newtownabbey, BELFAST, BT36 4PY UK, United Kingdom	Engineering, Design, Marketing, Sales, Supply, Installation, Rental, Service and Maintenance of water and wastewater process equipment, monitoring & control systems aeration, ozone, UV treatment, Variable Speed Drives and associated equipment, involved in water and wastewater pumping	X	X

3/12/18

Certificate No: 2007-SKM-AQ-2512 / 2007-SKM-AE-1239
Place and date: Solna, 21, December, 2016

		systems, waste water treatment systems, tankerage, oil separators and drainage systems.		
Xylem Water Solutions UK Ltd	• Private Road Number 1, Colwick, Industrial Est, Colwick, NOTTINGHAMN, NG4 2AN, United Kingdom • Milwey Rise Ind Est, AXMINSTER, United Kingdom • Unit 2 A1 Parkway Orton, SOUTHGATE, PE2 6YN, United Kingdom • Unit 6D/E, Bandeath Ind Estate Throsk, STIRLING, FK7 7 NP, United Kingdom • Unit 2, Church End Farm, Ware, LITTLE HADAM, SG11 2DY, United Kingdom • Unit 9/10 Chunnel Estate, Victoria Crecent, ASHFORD, Kent, TN23 7HL, United Kingdom • Busby Stoop Trading Estate, Ripon Road, THIRSK, Yorkshire, YO7 4EQ, United Kingdom • 28 Rufford Court, Woolston, WARRINGTON, United Kingdom • 1 Longman Drive, INVERNESS, IV1 1SU UK, United Kingdom • 106 Hawley Lane, Farnborough, Hampshire, FARNBOROUGH, GU14 8JE, United Kingdom • Unit 1500 Blueprint Industrial Estate Dundas Spur Portsmouth Hampshire PO3 5RN, United Kingdom	Engineering, Design, Marketing, Sales, Supply, Installation, Rental, Service and Maintenance of water and wastewater process equipment, monitoring & control systems aeration, ozone, UV treatment, Variable Speed Drives and associated equipment, involved in water and wastewater pumping systems, waste water treatment systems, tankerage, oil separators and drainage systems.	X	X
Xylem Water Solutions UK Ltd	Bingley Road, HODDESDON, Herts, EN11 0BU, United Kingdom	Sales of: marine engine cooling pumps, flexible impeller pumps, rotary lobe pumps for the processing industry, general industrial customer requirements	X	X

3/12/18

Certificate No: 2007-SKM-AQ-2512 / 2007-SKM-AE-1239
Place and date: Solna, 21, December, 2016

		for the following industries, chemical, pharmaceutical, engineering, food and automotive. Air and electrical operated pumps for a variety of fluid handling systems in the beverage and food service markets.		
Xylem Water Solutions Norge AS	• Evjenveien 108, 9024 TROMSÖ, Norway • Pålsvei 1, 8008 BODÖ, Norway • Stålfjæra 14, 0975 OSLO, Norway • Forusskogen 1, 4031 STAVANGER, Norway • Hardangerveien 72, 5224 BERGEN, Norway • Birkebeinerveien 21, 2301 HAMAR, Norway • Skibåsen 42 C, 4636 KRISTIANSAND, Norway • Fossegrenda 13 B, 7038 TRONDHEIM, Norway • Myrabakken Naerringssenter, 6022 ÅLESUND, Norway	Marketing, Sales, Installation, Rental, Service and Maintenance of Pumps, Mixers, Monitoring & Control Systems, Aeration Systems, integrated treatment systems and associated parts and products.	X	X
Xylem Water Solutions Sweden AB	• Gesällvägen 33, 174 53 SUNDBYBERG, Sweden • 361 80 EMMABODA, Sweden • Pjältvägen 10, 616 34 ÅBY, Sweden • Betongvägen 9, 982 38 GÄLLIVARE, Sweden • Boställsvägen 4, 702 27 ÖREBRO, Sweden • Boplatsgatan 2A, 213 76 MALMÖ, Sweden • Torpslingan 17, 973 47 LULEÅ, Sweden • Timmervägen 6, 857 53 SUNDSVALL, Sweden • Vaksala-Eke, Hus G, 755 94 UPPSALA, Sweden • Exportgatan 38 D, 422 46 HISINGS BACKA, Sweden • Förrådsgatan 32, 542 35 MARIESTAD,	Marketing, Sales, Installation, Rental, Service and Maintenance of Pumps, Mixers, Monitoring & Control Systems, Aeration Systems, integrated treatment systems and associated parts and products.	X	X

3/12/18

Certificate No: 2007-SKM-AQ-2512 / 2007-SKM-AE-1239
Place and date: Solna, 21, December, 2016

	Sweden • Stormgatan 15, 652 21 KARLSTAD, Sweden • Norra Obbolavägen 89, 904 22 UMEÅ, Sweden			
Grindex AB	Gesällvägen 33, 174 53 SUNDBYBERG, Sweden	Management, Business Development, Marketing, Sales and Rental of pumping systems and associated parts and products. The following processes are outsourced within Xylem: Engineering & Design, Production and Distribution of pumping systems, Stockholding and Supply of associated parts and products.	X	X

3/12/18

ROBUSCHI
GARDNER DENVER S.r.l. - Divisione ROBUSCHI
Via S.Leonardo, 71/A - 43122 Parma – Italy
Phone +39 0521 274911
info.italy@gardnerdenver.com
www.robuschi.com

ROBOX

SELECTION

International Measuring System (S.I.)

ROBUSCHI QUALITY ASSURED COMPANY ICIM ISO 9001

MODEL : **ES 65 /2 P** Quantity :

GENERAL DATA

Ref.	:	Plant	: Denilovgrad
Customer	: KARKANIAS	Item	: Aeration Tank
		Service	: Waste water treatement

FLUID

Fluid	: Atmospheric air				
Spec. W.ght (kg/m^3)	: 1.134	Spec. Heat Cp (kJ/kg°C)	: 1.010	Spec. Heat Cv (kJ/kg°C)	: 0.723
Altitude (m)	: 0	Pressure (mbar)	: 1,013	Temperature (°C)	: 35
Relative humidity (%)	: 50				

TECHNICAL DATA

Delivery (m^3/h)	Q1	: 930 FAD	*Delivery (Nm^3/h)	Q2	: 776	*Delivery (kg/h)	Q3 : 1,003
			***Delivery T (Nm^3/h)	Q2T	: 798	***Delivery T (kg/h)	Q3T : 1.021
Delivery (m^3/h)	Q4	:	*Delivery (Nm^3/h)	Q4	:	*Delivery (kg/h)	Q4 :
Speed (rpm)	n4	:	***Delivery T (Nm^3/h)	Q4T	:	***Delivery T (kg/h)	Q4T :
Dif.pressure (mbar)	DP	: 620	Inlet press. (mbar a)	P1	: 1,013	Outlet pres.(mbar a)	P2 : 1,633
Temp.rise(°C)	DT	: 70	Inlet temp.(°C)	T1	: 45	Outlet temp.(°C)	T2 : 115
			Spec.W.ght (kg/m^3)	SW	: 1.098	H2O injection (lt/min)	ia : 0.00
Abs.ed Power (kW)	N	: 22.0	**Sound Pressure Level (dBA)		: 74	Heat radiation (kW)	Wd : 1.9
Speed (rpm)	n	: 3,366	n/nmax (%)		: 86		
Volumetric efficiency (%)		: 85.3	Adiabatic efficiency (%)		: 83.6	Total efficiency (%)	: 60.9

*The Nm3/h and kg/h capacity are referred to the dry part of the conveyed gas/vapour mixture according DIN 1343
**Estimated sound pressure level at 1 m, free field with soundproof piping

***The Nm3/h and kg/h capacity are referred to total conveyed gas/vapour mixture

FAD measured as per ISO1217, performances tolerances as per Robuschi procedure TE1.S.0015 (Q1 =±5%*nmx/n; N=±5%)

ELECTRIC MOTOR

IEC Motor	: 200LA	Hz	: 50		
Power (kW)	: 30.0	Poles	: 2	V	: 380-420 D / 660-690 Y
Speed (rpm)	: 2,945	Size	:		

TRANSMISSION

Coupling type :

V-belt type	: XPA	Length (mm)	: 1,522	Shaft centres (mm)	: 525
Grooves	: 4	Mot.pulley Diam. (mm)	: 160	Blower pulley diam. (mm)	: 140
(Int.Code C479)		(Int.Code 110M)		(Int.Code S108)	

WARNING

No warning

3/12/18

ROBUSCHI
GARDNER DENVER S.r.l. - Divisione ROBUSCHI
Via S.Leonardo, 71/A - 43122 Parma – Italy
Phone +39 0521 274911
info.italy@gardnerdenver.com
www.robuschi.com

ROBOX

OPERATING CURVES

International Measuring System (S.I.)

ROBUSCHI QUALITY ASSURED COMPANY ICIM ISO 9001

MODEL : **ES 65 /2 P** Quantity :

GENERAL DATA

Ref.	:	Plant	: Denilovgrad
Customer	: KARKANIAS	Item	: Aeration Tank
		Service	: Waste water treatement

FLUID

Fluid	: Atmospheric air				
Spec. W.ght (kg/m^3)	: 1.134	Spec. Heat Cp (kJ/kg°C)	: 1.010	Spec. Heat Cv (kJ/kg°C)	: 0.723
Altitude (m)	: 0	Pressure (mbar)	: 1,013	Temperature (°C)	: 35
Relative humidity (%)	: 50				

OPERATION POINT

Inlet press. (mbar a)	P1	: 1,013	Inlet temp.(°C)	T1	: 45	Spec.W.ght (kg/m^3)	SW : 1.098
Delivery (Nm^3/h)	Q2	: 776	Dif.pressure (mbar)	DP	: 620	Cp / Cv	: 1.4
Abs.ed Power (kW)	N	: 22.0	Speed (rpm)	n	: 3,366	n/nmax (%)	: 86

FAD measured as per ISO1217, performances tolerances as per Robuschi procedure TE1.S.0015 (Q1 =±5%*nmx/n; N=±5%)

Operating curve (Q2 , N) ==> n

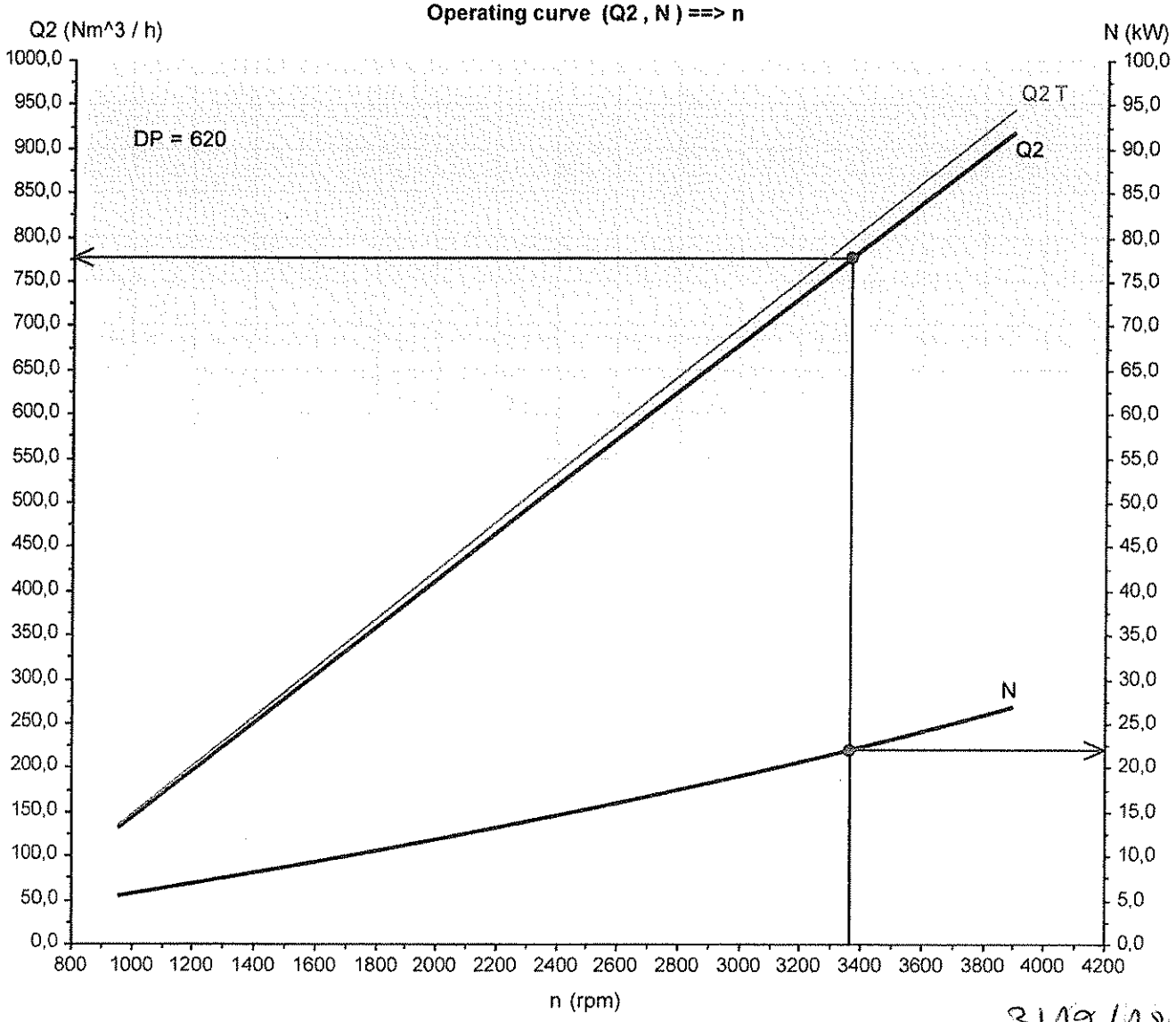

31/12/18

ROBUSCHI
GARDNER DENVER S.r.l. - Divisione ROBUSCHI
Via S.Leonardo, 71/A - 43122 Parma – Italy
Phone +39 0521 274911
info.italy@gardnerdenver.com
www.robuschi.com

ROBOX

OPERATING CURVES

International Measuring System (S.I.)

ROBUSCHI QUALITY ASSURED COMPANY ICIM ISO 9001

MODEL : **ES 65 /2 P** Quantity :

GENERAL DATA

Ref.	:	Plant	: Denilovgrad
Customer	: KARKANIAS	Item	: Aeration Tank
		Service	: Waste water treatement

FLUID

Fluid	: Atmospheric air				
Spec. W.ght (kg/m^3)	: 1.134	Spec. Heat Cp (kJ/kg°C)	: 1.010	Spec. Heat Cv (kJ/kg°C)	: 0.723
Altitude (m)	: 0	Pressure (mbar)	: 1,013	Temperature (°C)	: 35
Relative humidity (%)	: 50				

OPERATION POINT

Inlet press. (mbar a)	P1	: 1,013	Inlet temp.(°C)	T1	: 45	Spec.W.ght (kg/m^3)	SW : 1.098
Delivery (Nm^3/h)	Q2	: 776	Dif.pressure (mbar)	DP	: 620	Cp / Cv	: 1.4
Temp.rise(°C)	DT	: 70	Speed (rpm)	n	: 3,366	n/nmax (%)	: 86

FAD measured as per ISO1217, performances tolerances as per Robuschi procedure TE1.S.0015 (Q1 =±5%*nmx/n; N=±5%)

Operating curve (Q2 , DT) ==> n

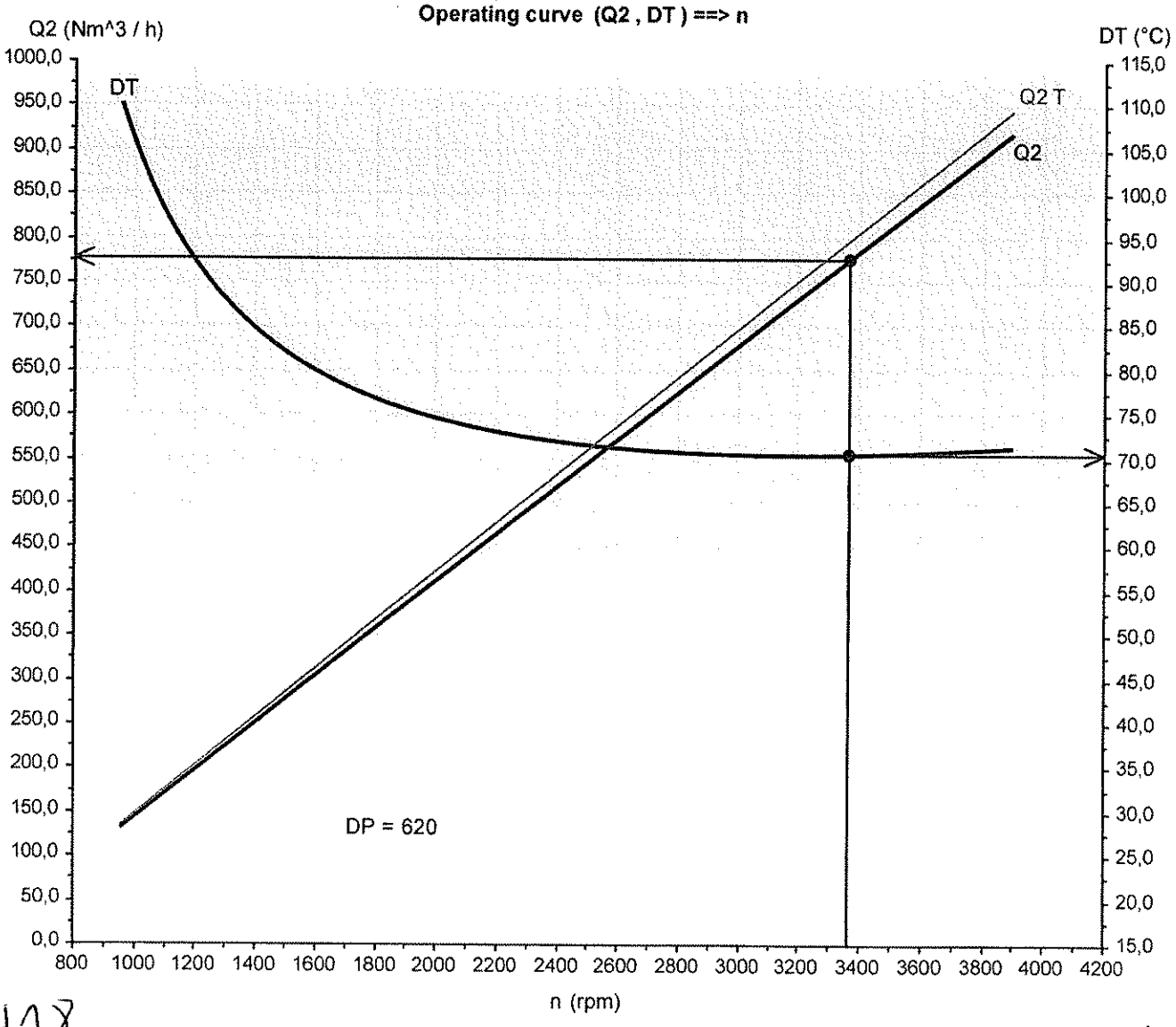

3/12/18

CISQ is a member of

IQNet

www.iqnet-certification.com

IQNet, the association of the world's first class certification bodies, is the largest provider of management System Certification in the world. IQNet is composed of more than 30 bodies and counts over 150 subsidiaries all over the globe.

ICIM

www.icim.it

CERTIFICATO n. / *CERTIFICATE No.* **0251/7**

SI CERTIFICA CHE IL SISTEMA DI GESTIONE PER LA QUALITA' DI
WE HEREBY CERTIFY THAT THE QUALITY MANAGEMENT SYSTEM OPERATED BY

Gardner Denver S.r.l.
Divisione ROBUSCHI

UNITA' OPERATIVE
OPERATIVE UNITS

Via S. Leonardo, 71/A - 43100 Parma (PR)
Italia

E' CONFORME ALLA NORMA
IS IN COMPLIANCE WITH THE STANDARD

UNI EN ISO 9001:2008

PER LE SEGUENTI ATTIVITA'
FOR THE FOLLOWING ACTIVITIES

EA: 18

Progettazione, produzione e assistenza di compressori a lobi, compressori a vite, pompe centrifughe e pompe per vuoto ad anello liquido.

Design, production and service of blowers, screw compressors, centrifugal pumps and liquid ring vacuum pumps.

Riferirsi al Manuale della Qualità per l'applicabilità dei requisiti della norma di riferimento.
Refer to Quality Manual for details of application to reference standard requirements

Il presente certificato è soggetto al rispetto del regolamento per la certificazione dei sistemi di gestione per la qualità delle aziende.
The use and the validity of this certificate shall satisfy the requirements of the rules for the certification of company quality management systems.

Data emissione *First issue*	Emissione corrente *Current issue*	Data di scadenza *Expiring date*
16/01/1995	11/12/2015	14/09/2018

ICIM S.p.A.
Piazza Don Enrico Mapelli 75 – 20099 Sesto San Giovanni (MI)

CISQ è la Federazione Italiana di Organismi di Certificazione dei sistemi di gestione aziendale.

CISQ is the Italian Federation of management system Certification Bodies.

ACCREDIA
L'ENTE ITALIANO DI ACCREDITAMENTO

SGQ N° 004 A
SGA N° 005 D
SCR N° 006 F
PRS N° 082 C
SSI N° 008 G
PRD N° 004 B
ISF N° 046 E
SGE N° 035 H

Membro degli Accordi di Mutuo Riconoscimento EA, IAF e ILAC
Signatory of EA, IAF and ILAC Mutual Recognition agreements

FEDERAZIONE CISQ

www.cisq.com

3/12/18

ROBUSCH®

Environmental Solutions

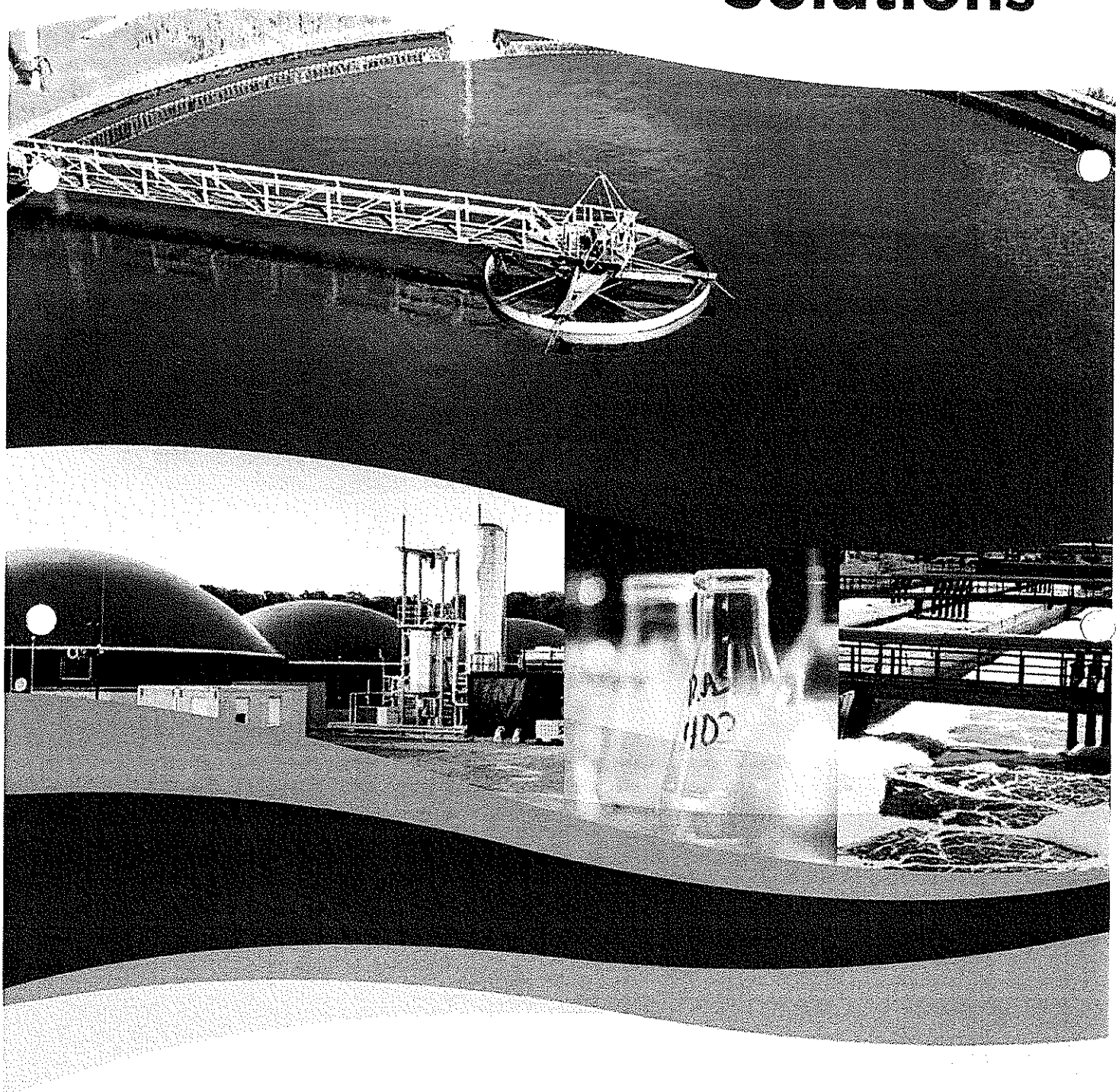

31/12/18

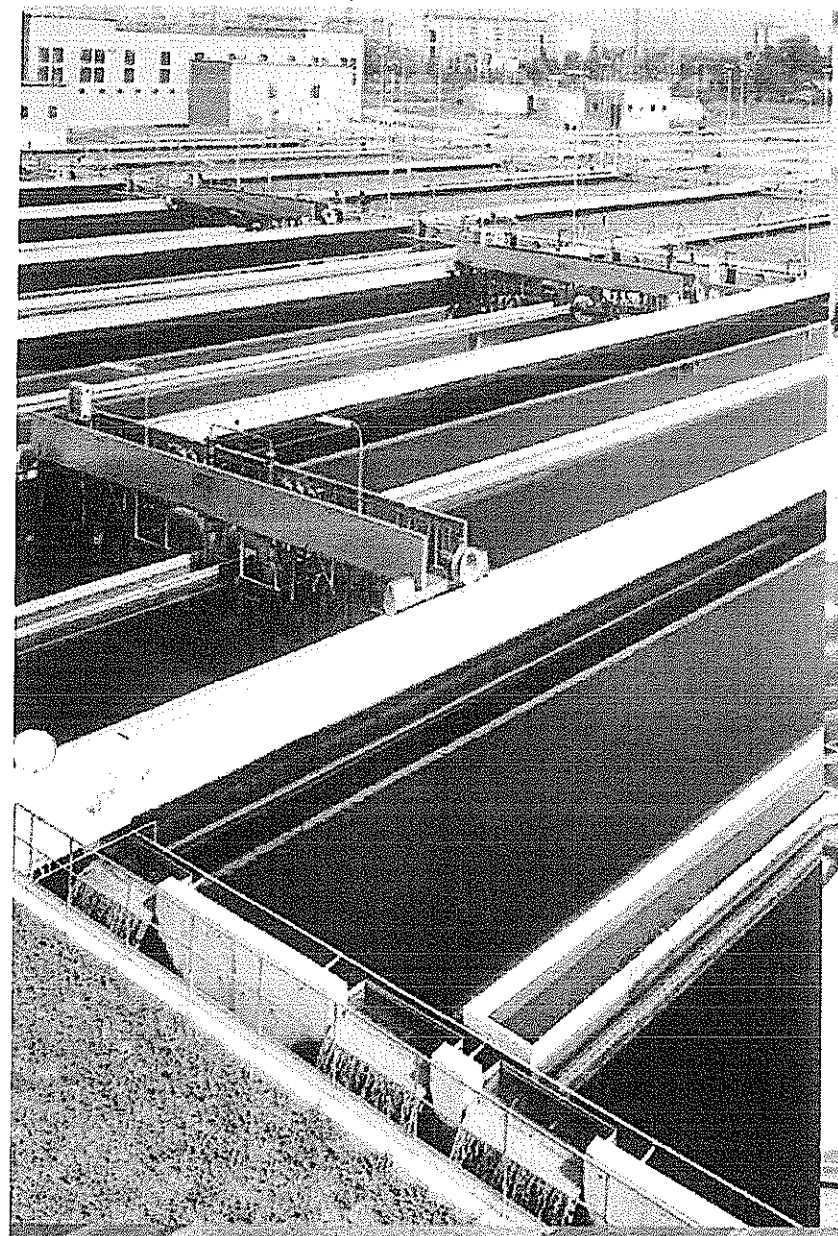

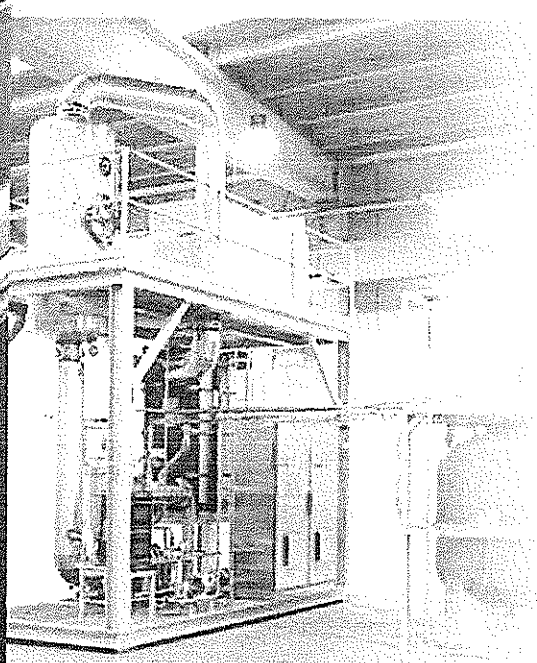

ROBUSCH®

3112/78

Wastewater Treatment
Biogas
Sewage Handling
Tertiary Treatment for Wastewater

In a competitive and evolving global market, our long history of supplying aeration equipment in wastewater treatment plants that best meets customer specific requirements, makes Robuschi a trusted and reliable partner for the environmental industry. Cost-effective solutions for new plants or refurbishments of existing installations are a major focus of our product excellence and application expertise.

Nowadays, our strategy of combining products and services extends to an ever-wider array of environmental solutions, such us -biogas, mechanical vapor recompression, sewage handling and many more.

Therefore, as a global supplier of environmental solutions, we lead the market in developing innovative technologies that support our customers in reducing life cycle costs, increasing efficiency, meeting legal requirements and, finally, improving the quality of product or services they want to provide to their own customers.

Ecological sustainability is part of the Robuschi strategy, focusing on promoting environmentally friendly solutions, enhancing energy saving and protecting natural resources.

- **Top energy efficiency**
- **Low life cycle costs**
- **Low noise operation**
- **Ease of maintenance**
- **Tailor-made offer**

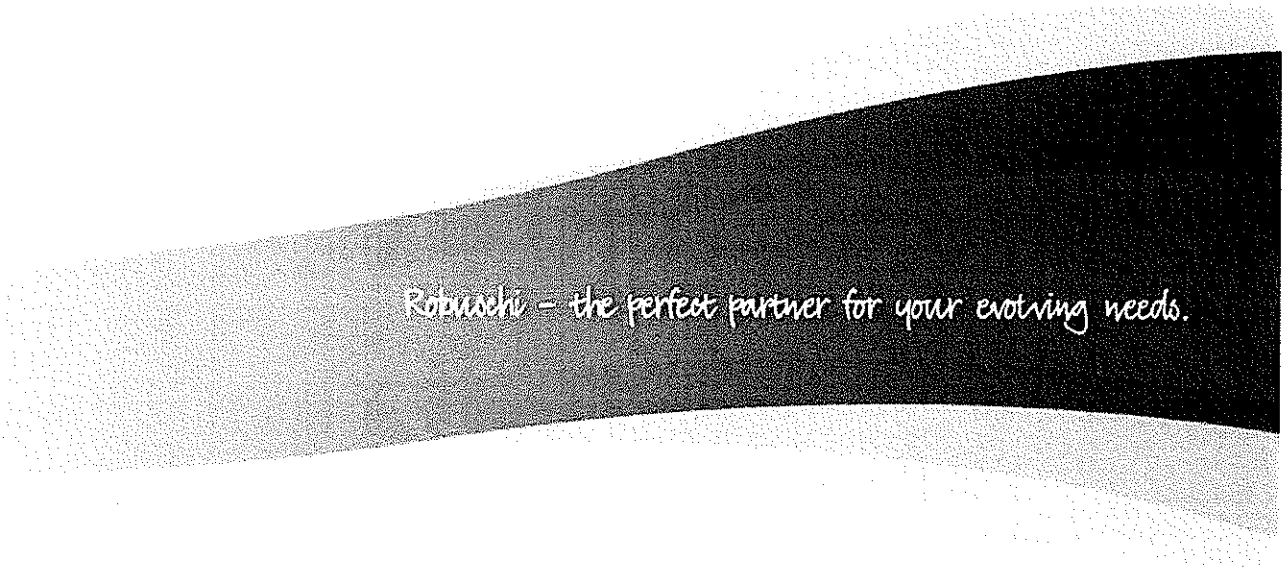

3/12/18

Environmental Specialist

- **Energy efficiency**
  In wastewater treatment plants power consumption mainly comes from aeration machines.
  Robuschi screw compressors can provide significant energy saving, depending on plant configuration.

- **Oil free**
  Environmental processes require clean and oil free air.
  Robuschi packages are totally oil free (Class 0 certification, according to ISO 8573-1).

- **Flexibility**
  More and more applications demand high turn down capability along with intermittent mode operation.
  Robuschi PD blowers and screw compressors perfectly fit this requirement.

- **Low noise**
  Low noise emission is one of the main evaluation criteria for residential areas and industrial facilities.
  All Robuschi packages have been designed for reducing the noise impact, satisfying customer requirements.

- **User and maintenance friendly**
  Thanks to its simple and robust design, all Robuschi equipment demands little maintenance during its operation and when the machines need to be serviced; every operation is easy and quick.

- **References**
  We are one of the leading suppliers of state-of-the art vacuum and pressure technology for environmental applications.
  Robuschi customers, all over the world, from municipalities to consultants, have put their trust into our engineers and products.
  We are the benchmark for the industry and will continue to work closely with our business partners around the globe.

ROBUSCHI

3/12/18

Robuschi Solutions

Wastewater Treatment

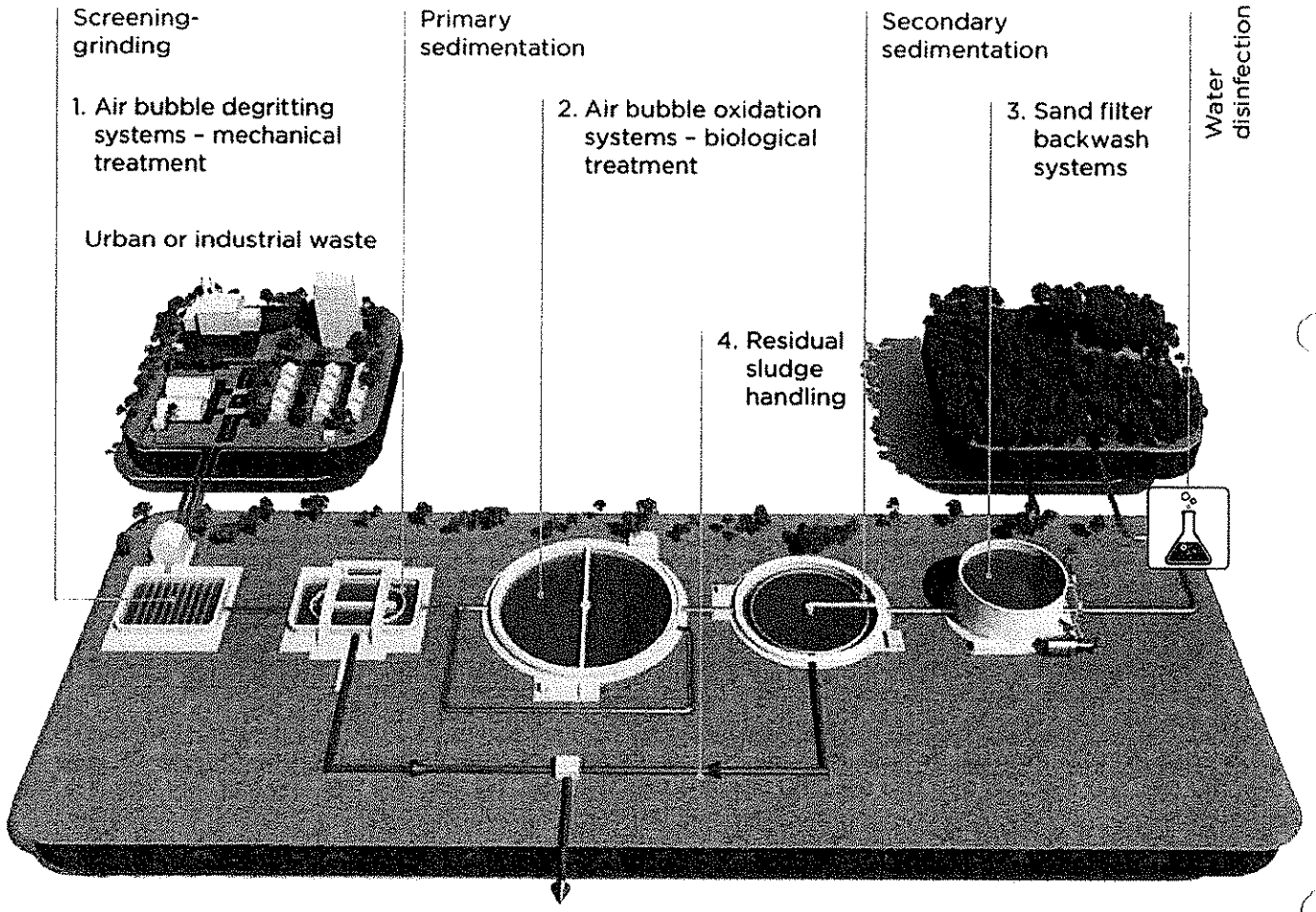

1 **PD Blower**
RBS - ROBOX evolution - pressure up to 1,000 mbar (g) - capacity up to to 25,000 m³/h
Screw Compressor
ROBOX screw Low pressure up to 1,000 mbar (g) - capacity up to 10,500 m³/h

2 **PD Blower**
RBS - ROBOX evolution - pressure up to 1,000 mbar (g) - capacity up to 25,000 m³/h
Screw Compressor
ROBOX screw Low pressure up to 1,000 mbar (g) - capacity up to 10,500 m³/h
ROBOX screw Hi pressure up to 2,500 mbar (g) - capacity up to 9,500 m³/h

3 **PD Blower**
RBS - ROBOX evolution - pressure up to 1,000 mbar (g) - capacity up to 10,500 m³/h
Screw Compressor
ROBOX screw Low pressure up to 1,000 mbar (g) - capacity up to 10,500 m³/h

4 **Centrifugal Pump**
PROMIX - UNI PN 10 - capacity up to 2,000 m³/h

3/12/18

Robuschi Solutions

Tertiary treatment for Wastewater

Mechanical vapor recompression

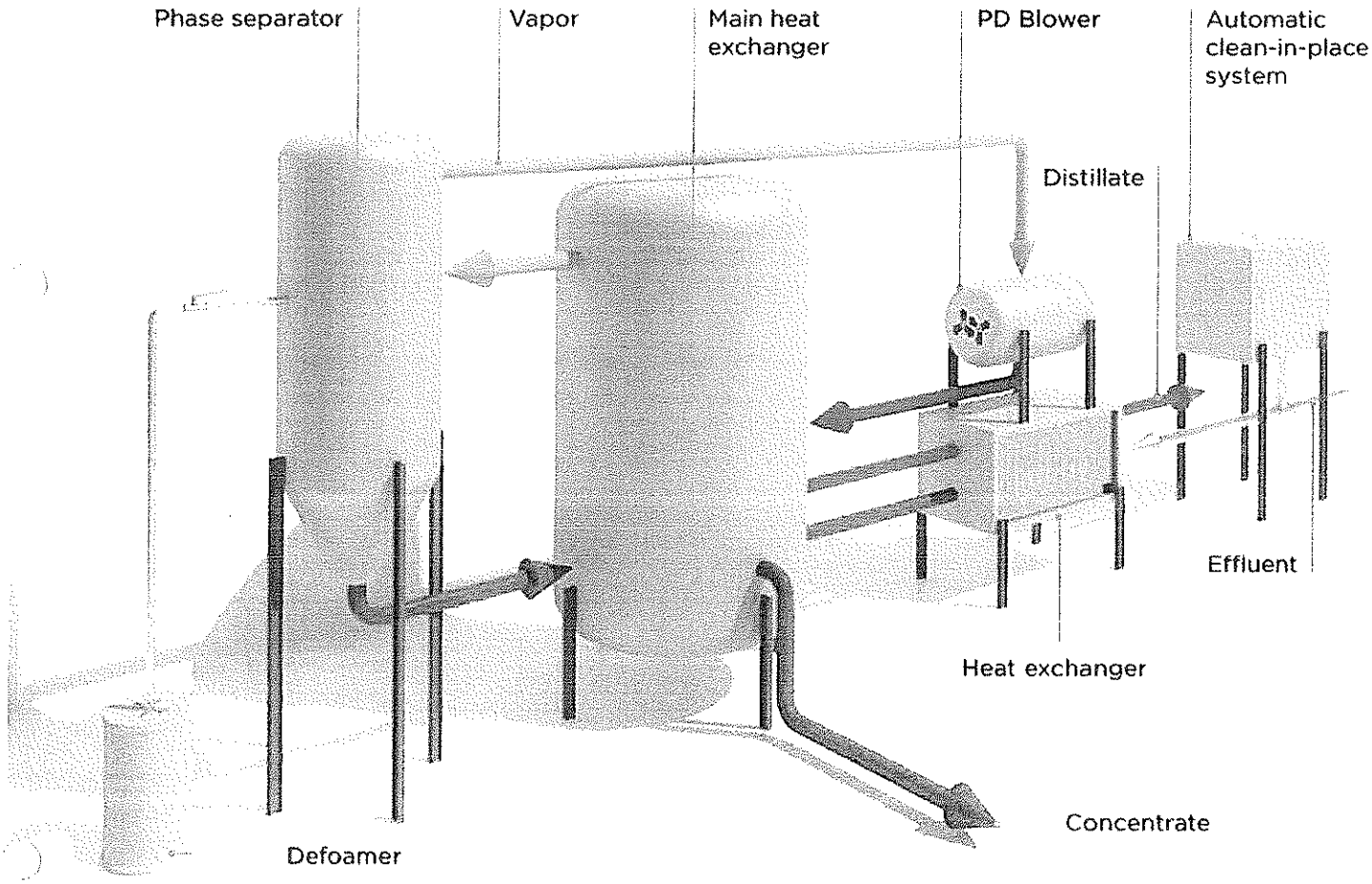

PD Blower
RBS INOX - pressure up to 1,000 mbar (g) - vacuum up to 200 mbar (a)
- capacity up to 14,000 m³/h

Tertiary treatment includes reverse osmosis, desalination and ozone processes. Robuschi PD blowers are ideally suited to respond to specific plant requirements.

ROBUSCH

3/12/18

Robuschi Solutions

Biogas

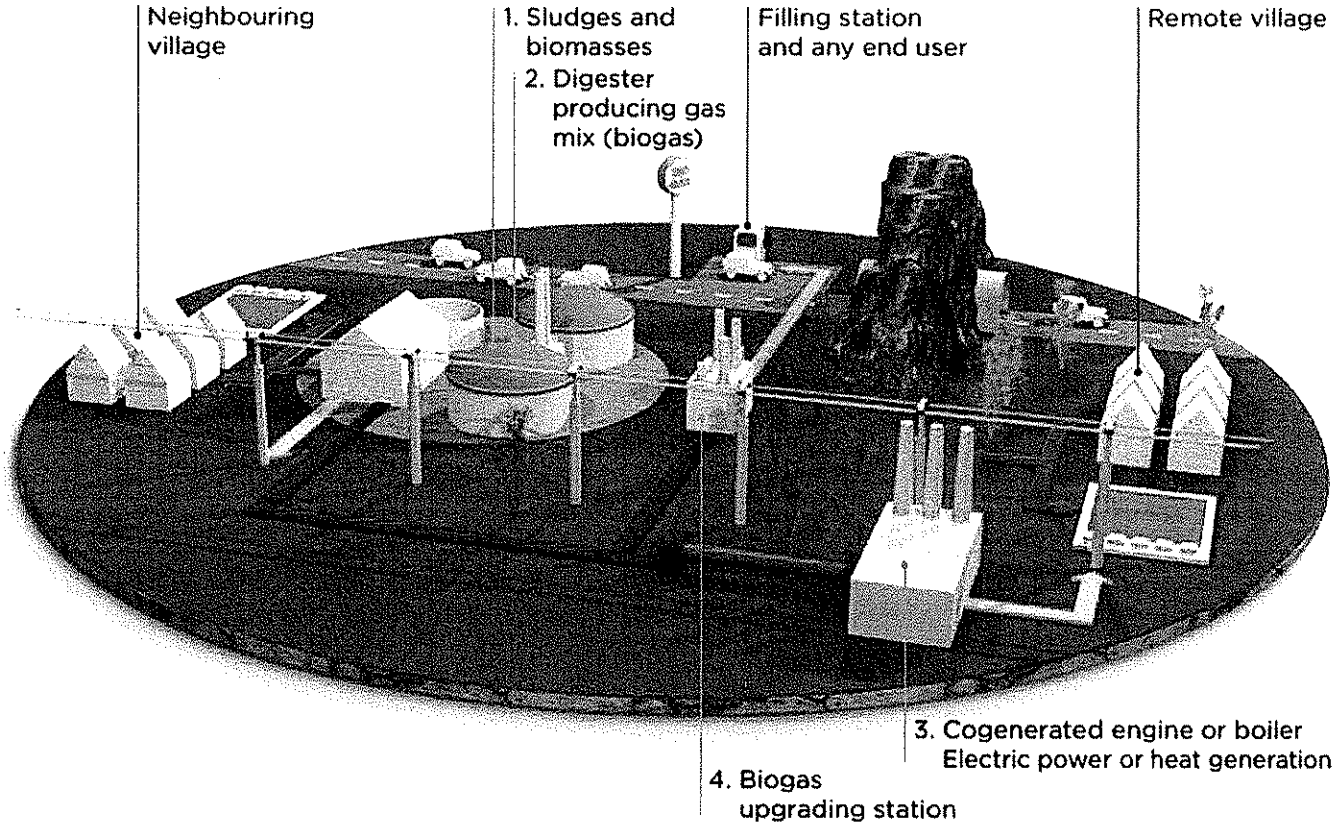

1 Centrifugal Pump
PROMIX (stainless steel execution) - UNI PN 10 - capacity up to 700 m³/h

2 Liquid Ring Compressor
RVS - pressure up to 2,000 mbar (g) - capacity up to 4,200 m³/h

3-4 PD Blower for Biogas
CRBIO - GRBIO up to 400 mbar (g) - capacity up to 3,280 m³/h
ROBOX evolution BIOGAS up to 1,000 mbar (g) - capacity up to 2,850 m³/h

ROBUSCHI

3/12/18

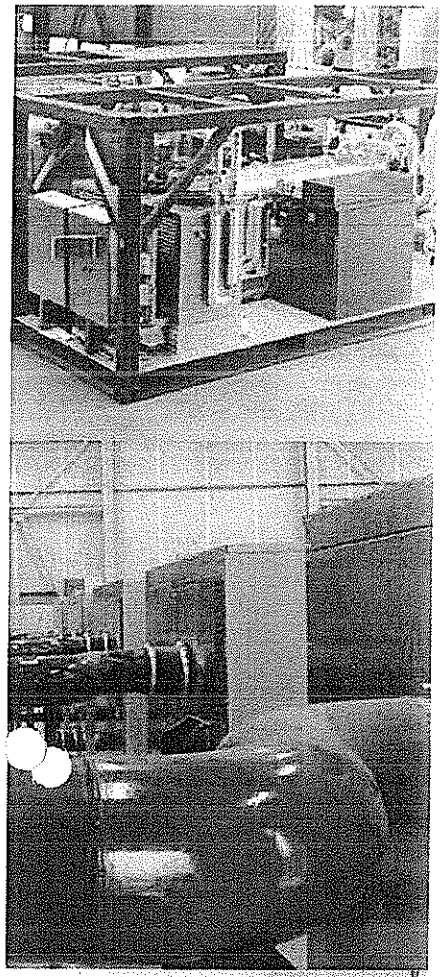

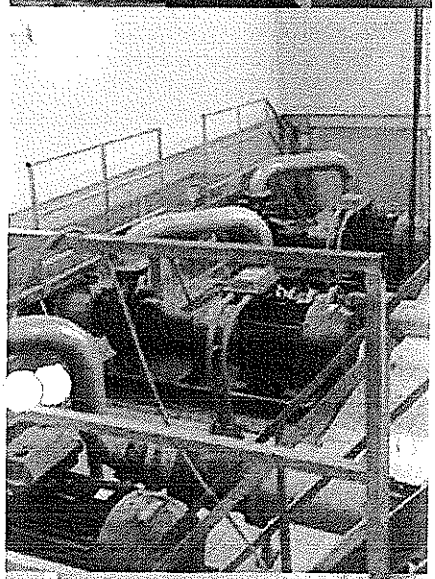

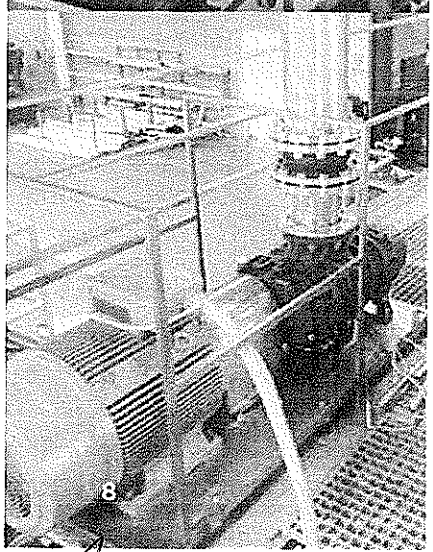

Effective Solutions for Environmental Processes

The spectrum of applications and the process complexity in the environmental industry need the choice of specific products. Thanks to its wide range of technologies, Robuschi manages to offer the most suitable one, providing a solution that combines superior efficiency, small footprint, minimum maintenance and operating costs, long service life and low noise emission.

Application	Description	Products
Primary sedimentation	In the primary sedimentation stage, sewage flows through large tanks. These tanks are used to settle sludge while the grease and oil rises to the surface and is skimmed off. Primary settling tanks are usually equipped with mechanically-driven scrapers that drive the collected sludge continually towards a hopper in the base of the tank where it is pumped to treatment facilities using PD blowers or similar technologies. As a result biological materials remain on the surface and the heavy components (mainly sand) are isolated.	**PD Blowers** **Screw Compressors**
Aeration process in wastewater treatment plants	The aeration tanks in wastewater treatment plants are activated with oxygen by using compressed air. A thorough mixing of the sludge with oxygen increases the gas yield and reduces its retention time in the tank. Even better results are achieved with warm compressed air. Blower or screw blower technologies can be found in various types of wastewater treatment plants,including aerobic activated sludge systems, SBR, nitrification-denitrification in a single basin and MBR.	**PD Blowers** **Screw Compressors**
Desalinisation	Desalinisation is the process of removing dissolved salts from seawater or brackish water. Desalting technologies can be used for many applications, most commonly to produce potable water for domestic or municipal purposes.	**PD Blowers** **Screw Compressors**

3/12/18

Application	Description	Products
Slurry liquid pumping	Using slurry pumps, tough, abrasive, viscous liquids and particles in suspension can be transferred from one tank to another of the wastewater treatment plant.	**Centrifugal Pumps**
Back washing sand Filtration	Air is used to expand the filter bed, breaking up compacted material. Clean backwash water is pumped in, suspending the loose material from where the particles are lifted through and carried away.	**PD Blowers** **Screw Compressors**
Biogas production	The biomass produced in activated sludge and clarifying tanks is stabilised in the digestion tower and used to produce biogas. A thorough mixing of the sludge increases the gas yield and reduces its retention time in the reactor. During the process, gas is withdrawn from the upper part of the digestion tower, compressed and reintroduced through the nozzles at the bottom.	**Liquid Ring Compressors** **Centrifugal Pumps**
Biogas recovery	This is the process of transfering the biogas from the digestor to the endothermic coogenerating engine or from digestors to upgrading stations.	**PD Blowers Biogas**
Slurry drying process	Farm processes install a phase-separation plant to dry slurryusing PD blowers for vapour recompression processing.	**PD Blowers**

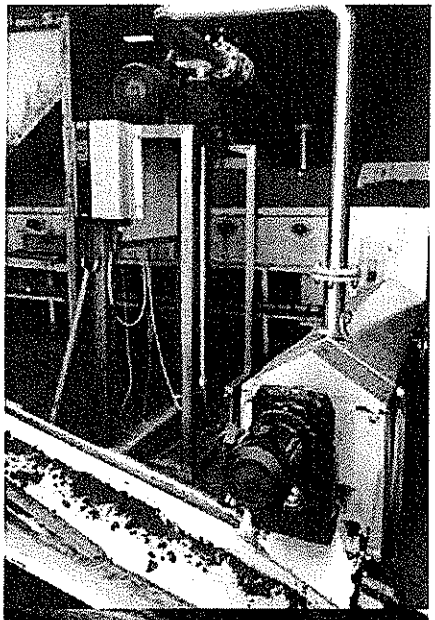

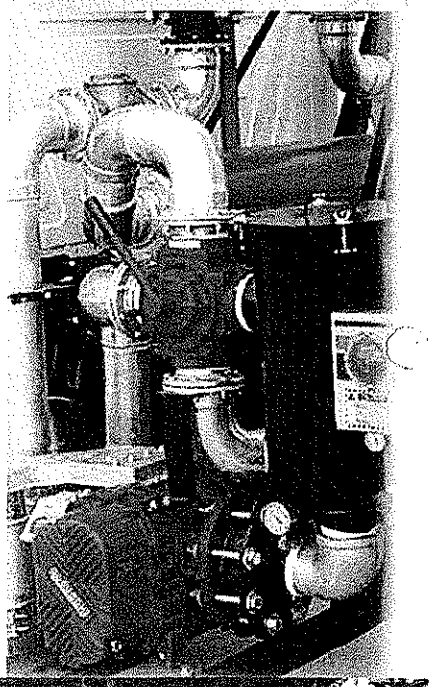

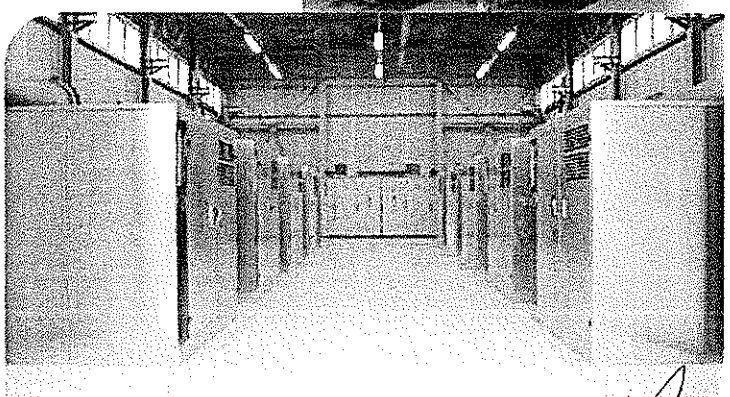

3/12/18

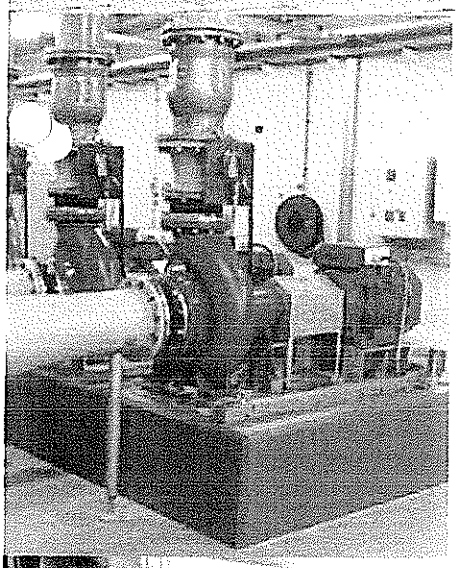

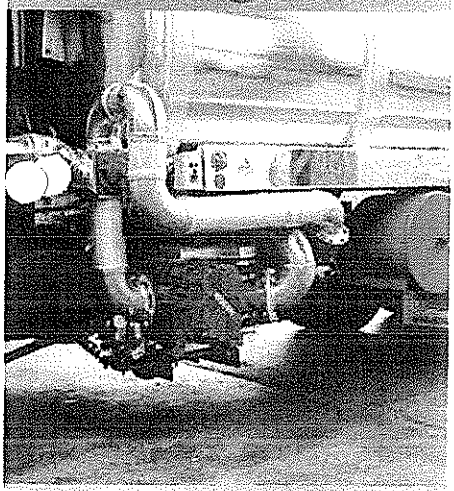

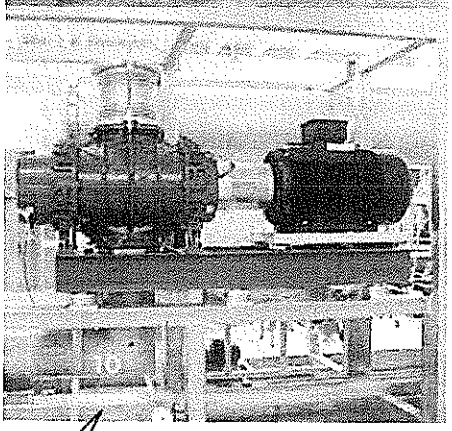

Application	Description	Products
Fish pond aeration	The water's oxygen content can be substantially increased using PD blowers, which increases the volumes of fish that can be kept in a pond. In this process, air is drawn from the atmosphere and forced through an inlet into the tube aerator. It is then diffused into the water through tiny openings and rises in fine bubbles. The oxygen in the water causes the fish to grow and multiply more rapidly, significantly increasing the yield.	**PD Blowers** **Screw Compressors**
Landfill gas recovery	The digestion of covered household waste produces landfill gas. The gas is collected and removed from the landfill, where it is compressed by gas compressors or blowers. This gas can then be used as a heating fuel, converted into electricity or used as liquefied gas.	**PD Blowers Biogas**
Soil gas extraction	This is an approved method for the reclamation of soil polluted with hydrocarbons. Depending on the volume, distribution and saturation pressure of the pollutants and the air flow through the soil, vacuum blowers are used with operating depth range between 10 - 80 m. Disposal of the extracted air must be carried out in compliance with air quality legislation.	**Vacuum Blowers**

3/12/18

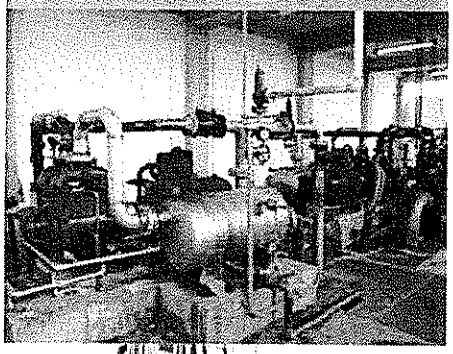

Application	Description	Products
Suction vehicles for wastewater	Vacuum pumps provide suction pressure for removing and flushing out contaminants in wastewater and for cleaning sewer networks.	**Vacuum Blowers**
Mechanical vapor compression & recompression	This process uses thermo-compression to extract water as clean condensate from polluted fluids. Because only the heavy residuals are required to be sent for further treatment, a considerable amount of water is recyclable. The distillation process acts inside an evaporator, where a PD blower is used to pressurise the vapor, in order to produce clean water condensate. Since this vapour is generally acidic and chemically aggressive, the PD blower must be encased in stainless steel and use special seals, to avoid the vapour contact the oil pumps.	**PD Blowers**
Truck-Hydroexcavation	The process uses pressurised water and an industrial-strength vacuum to excavate and evacuate soil simultaneously. After the soil is broken up, it is conveyed by vacuum, along with the water slurry to a debris tank.	**Vacuum Blowers**

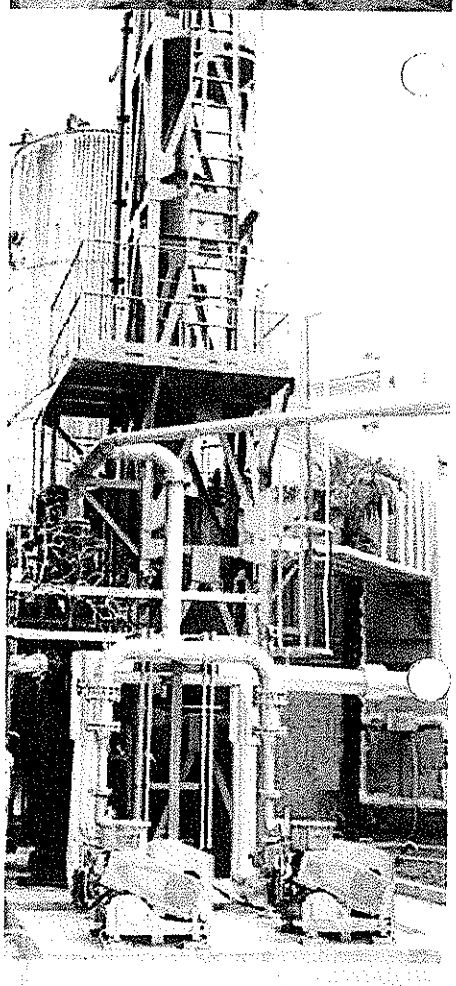

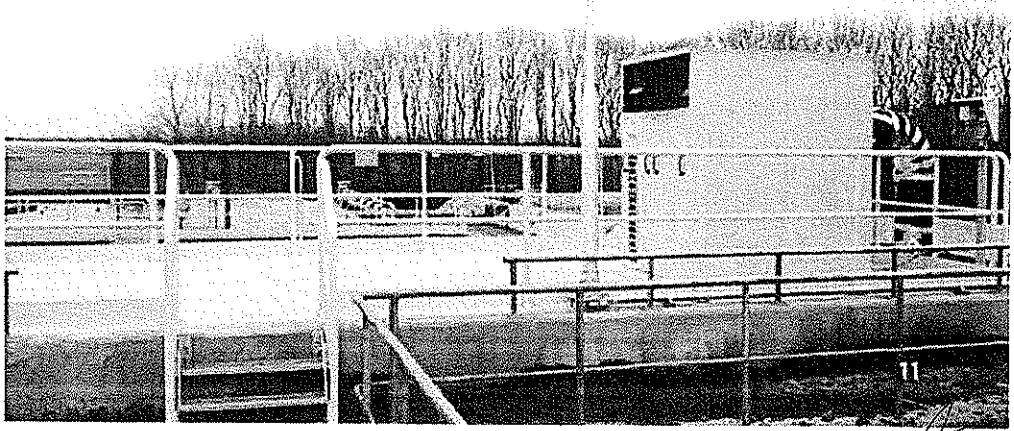

3/19/18

Product Range

PD Blowers

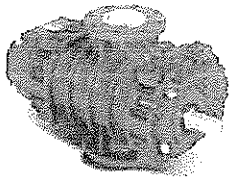

RBS is the innovative three lobe rotary positive displacement blower equipped with a special low pulse system to reduce pressure pulsations.

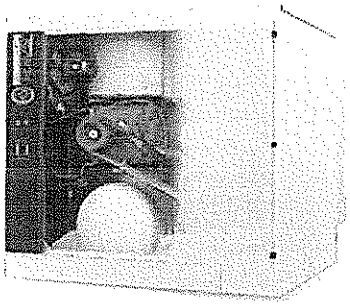

ROBOX evolution is the low pressure blower package, based on RBS series, operated by an electric motor through a special belt drive, including all accessories and noise enclosure.

- Robust
- Cost efficient
- Dry running (Class 0 certification, according to ISO 8573-1)
- Maintenance friendly

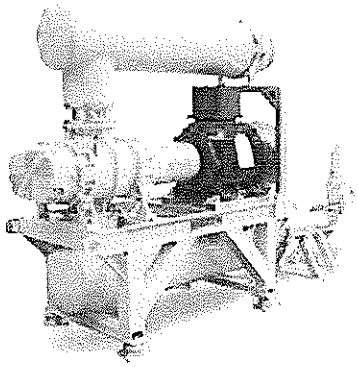

CRBS - GRBS consist of table top blower packages with RBS series and fitted with all the necessary accessories.

ROBOX evolution BIOGAS and **CRBIO - GRBIO** are blower packages, especially developed for the conveying and compression of biogas, as well as natural and landfill gases.

- Reliable
- Safe
- Resistant
- Full range of accessories
- ATEX certification
- Customised solutions for different biogas applications

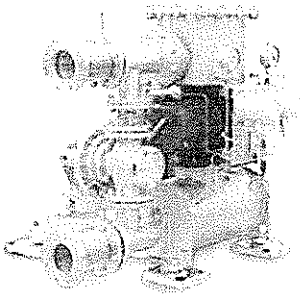

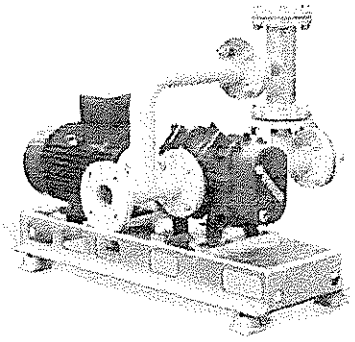

3/12/18

e

Product Range

PD Blowers

RBS INOX
All components in the PD blower series are constructed from stainless steel (AISI 316 or DUPLEX), to provide excellent corrosion resistance in a variety of heavy-duty applications such as wastewater treatment, ozone and evaporation processes.

- Different configurations available with various sealing systems
- Excellent resistance to corrosion
- Maintenance friendly

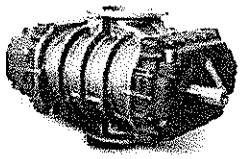

RB-DV (air injection vacuum blower) are three-lobe rotary blowers suitable to operate as dry exhausters up to 90% of vacuum.

- Patented and unique air inlet design
- Low noise
- Cool operating temperatures (not overheating on a dead head)
- Low maintenance thanks to its robustness and heavy-duty operation

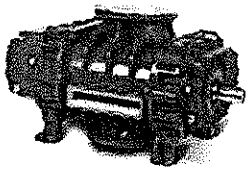

Screw Compressors

The low-pressure compressor unit, ROBOX screw, combines unique characteristics of the "oil-free" RSW screw compressor, with the consolidated characteristics of ROBOX compact units. It is available in two versions: **ROBOX SCREW Hi pressure** up to 2,500 mbar and **ROBOX SCREW Low pressure** up to 1,000 mbar.

- Efficient thanks to its unique RSW patented rotors, which reduce the number of revolutions and enhance the capacity-pressure ratio
- Low noise as a result of high-efficiency internal compression, silencers and advanced enclosure
- Simple installation
- Flexible to ensure the operation at the point of best efficiency
- Oil free for a more environmentally-friendly operation (Class 0 certification, according to ISO 8573-1)
- Ease of maintenance thanks to its simple and robust construction
- Customised with a wide range of options available

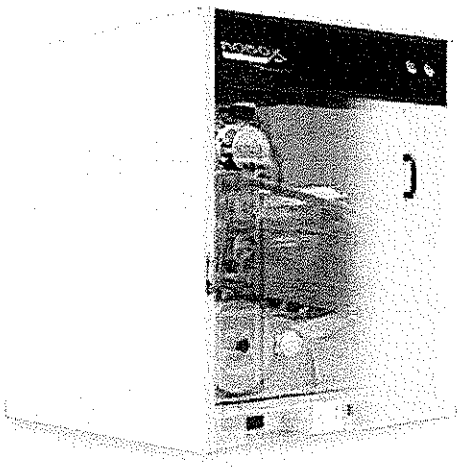

3/12/18

Product Range

Liquid Ring Vacuum Pumps and Compressors

The **RVS** series are liquid ring vacuum pumps, able to suck gas as well as vapours, achieving up to 33 mbar (a). Furthermore, the vacuum portfolio is wide-ranging with complete packages (LRVS, CRVS, KRVS) in total or partial water and oil recirculation versions. They can also be used as compressors for pressures up to 2 bar g. max.

- Reduced noise and vibrations
- Separation of service liquid from compressed gas
- No contact between cooling and service liquid (KRVS packages)
- Easy installation and maintenance

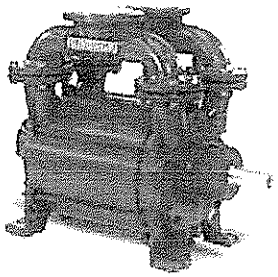

Centrifugal Pumps

The **PROMIX** family is capable of conveying any type of inert, aggressive, viscous liquid containing high percentages of suspended solid particles including sludge and the **PROCHEM** series is suitable for conveying clean or slightly murky liquids.

- Large inlet nozzle, allowing slurry suction and reducing the wear of the impeller
- Shaft protected from the conveyed liquid, preventing any corrosion event
- Stainless steel version and special models available

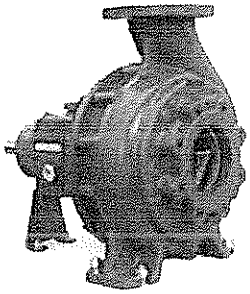

3/12/18

Performances

Pressure (mbar g)

	400	1,000	2,000	2,500
RBS				
ROBOX evolution				
CRBS - GRBS				
ROBOX evolution BIOGAS				
CRBIO - GRBIO				
RBS INOX				
ROBOX SCREW HI pressure				
ROBOX SCREW Low pressure				
RVS				
PROMIX - PROCHEM	Available in PN 10 - PN 16 compliance			

Vacuum (mbar a)

	500	200	100	33
RBS				
ROBOX evolution				
CRBS - GRBS				
RBS INOX				
RB-DV				
RVS				

Capacity (m³/h)

	800	2,600	2,850	3,280	4,200	6,000	9,500	10,500	14,000	25,000
RBS										
ROBOX evolution										
CRBS - GRBS										
ROBOX evolution BIOGAS										
CRBIO - GRBIO										
RBS INOX										
RB-DV										
ROBOX SCREW HI pressure										
ROBOX SCREW Low pressure										
RVS										
PROMIX - PROCHEM										

3/12/18

Gardner Denver

Your Ultimate Source
For Pressure and Vacuum

GARDNER DENVER
Headquarter

GARDNER DENVER S.r.l.
Divisione ROBUSCHI

Manufacturing facilities
Via S. Leonardo, 71/A
43122 Parma - Italy
Phone +39 0521 274911/91
Fax +39 0521 771242
info@robuschi.com

www.robuschi.com

GARDNER DENVER
Industrials Group

Head office
222 East Erie Street,
Milwaukee (WI) 53202
Phone +1 414-212-4700

www.gdindustrials.com

A1-1D15-C ROBUSCHI reserves the right to make any modification aimed at the continual improvement of their products.

3172/18

PLATE MOUNTED AXIAL FLOW FANS
COMPACT Series type HCFB-HCFT (Plastic impellers) and HCBB-HCBT (Aluminium impellers)

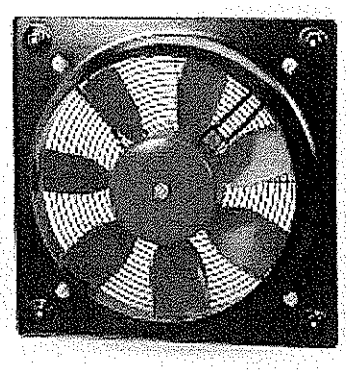

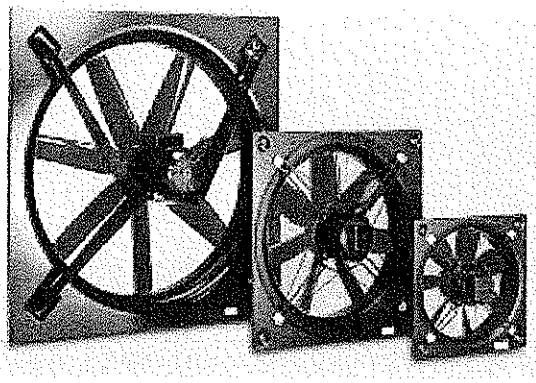

Description

The S&P Compact Plate Mounted Axial Fans feature, as the name suggests, an extremely compact design created by the combination of an internal rotor motor with factory matched direct drive wrap around impeller hub. This very low profile design optimises airflow performance whilst minimising noise generation. The Compact Plate Mounted Axial Fan series require an absolute minimum depth for any given wall, ceiling or panel mounted installation. Designed to be installed directly into walls, ceilings or panels, the Compact Plate Mounted Axial Fan series are suitable for use within a wide range of residential, commercial and industrial ventilation applications.

Applications

- General Ventilation:
  Shops , Offices, Cafes, Bars, Warehouse premises, Garages
- Agricultural Ventilation:
  For agricultural ventilation applications the Compact Plate Mounted Axial Fan series can be supplied with special high corrosion resistant constructional features. The specific application should be specified when ordering. Please see information concerning "Special Versions."
- Industrial Ventilation
  OEM equipment applications

The range

The Compact Plate Mounted Axial Fan series is available in eleven (11) standard nominal diameters from 250 to 1000mm, and depending upon the model, available with single or three phase motors in 2, 4, 6 & 8 poles.
Air volume performance ranges from 1,200 to 54,000 m^3/hr.

IP 65*

* IP55: Models 2-315, 2-355, 800 & 1000

Construction

All COMPACT Plate Mounted Axial Fans include a one piece bell mouth inlet and mounting plate manufactured from high grade galvanised steel. The motor and fan impeller are firmly supported within this mounting plate by a strong electrowelded steel support frame. All models up to and including size 710, include a steel finger proof guard as standard mounted to the inlet side of the fan. This whole assembly is protected by a two stage cataforesis primer and tough black polyester paint finish. This particular coating has been evaluated as being suitable for Outdoor Equipment usage, by Underwriters Laboratories, Inc (USA).
All models are supplied with a pre-wired wiring junction box located on the back of the motor hub for easy wiring access. This wiring junction box protects all wiring connections against the ingress of dust and moisture. IP65 Rated*.
All standard Compact Plate Mounted Axial Fans are supplied in Form (A) configuration. Airflow over Motor – Impeller.

Motors
All Compact Plate Mounted Axial fans incorporate asynchronous induction motors with a squirrel cage rotor. All motors are manufactured in accordance with UNE-113 and CEI-34-1 standards. The motor casings are constructed from die cast aluminium with integrated cooling fins and finished with a tough (black) weatherproof polyester paint.
As standard, the Compact Plate Mounted Axial fans incorporate the following motor specifications:
- IP65 (IP55 for models 2-315, 2-355, 800 & 1000).
- Class F Insulation (-40 °C to +70 °C working temperatures).
- Suitable for usage in environments up to 95% RH.
- Speed Controllable (except 2 pole models, /4-630, 710, 800 & 1000 and explosion proof versions).
- Three Phase models can be supplied to special order for use with frequency inverters speed controllers. Please enquire.
- PG-11 cable glands on terminal boxes.
- Thermal protection

Motors can be supplied suitable for the following electrical supplies:
- Single Phase 230V 50 Hz.
- Three Phase 230/400V 50 Hz.
- Three Phase 400V 50Hz.

For other special voltages and frequencies, please enquire.
All single phase motors are supplied complete with a capacitor which is located inside the wiring terminal box.

Special versions

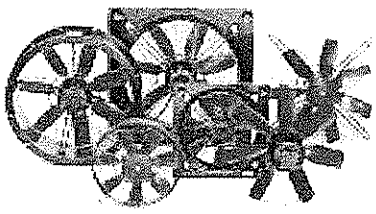

Special versions of the Compact Plate Axial Fan are available, i.e.:

- Agricultural construction.
- Deep guard for OEM applications.

Depending upon the application requirements please enquire.

Before installation, it is important to check that the product electrical characteristics listed on the data plate label (voltage, power, frequency etc), match those of the intended electrical supply.

3/12/18

Reference

H	C	F	T	/	4	-	4	0	0	/	H		A			
1	2	3	4		5		6				7		8	9		

1 - H: Compact Plate Axial Fan

2 - C: Series designation

3 - Impeller Type:

- **F:** Plastic (fibre-reinforced) Ø 250-Ø 630, single part plastic impeller and hub. Ø 710 - Ø 1000, separate plastic impeller with aluminium hub
- **G:** Plastic (fibre-reinforced) Ø 250-Ø 630,* separate plastic impeller and hub
- **B:** Die Cast Aluminium Ø 250-Ø 400, single part aluminium impeller and hub Ø 450 - Ø 1000, separate aluminium impeller with aluminium hub

4 - Electrical Connection:

B: Single Phase **T:** Three Phase

* Only in special 60Hz versions under request

5 - Number of Poles (fan speed):

- **2:** (approx. 2900 r.p.m. - 50 Hz)
- **4:** (approx. 1400 r.p.m. - 50 Hz)
- **6:** (approx. 900 r.p.m. - 50 Hz)
- **8:** (approx. 700 r.p.m. - 50 Hz)

6 - : Nominal Diameter of Fan. (mm).

7 - : Pitch Angle. H – high or L – low

8 - Direction of Air:

- **A:** Motor-Impeller (standard for plate mounted models)
- **B:** Impeller-Motor

9 - Special Construction

- **W:** With remote mounted wiring terminal box
- **M:** Without wiring terminal box

- **X:** Motor support without inlet finger guard
- **P:** Deep motor support
- **N:** Without plate
- **S:** Motor and impeller only
- **L:** Weatherproof Protected
- **C:** Condensation Protected
- **Ex:** Explosion proof versions in accordance to ATEX Directive, for three phase models:
  - Increased safety Ⓔx II2G EExeIIT3
  - Flame proof, only for models 800 and 1000
    Ⓔx II2G EExdIIBT5 or EExdIICT4
- **G:** Special corrosion treatment for agricultural applications

Supply Voltages and Frequencies

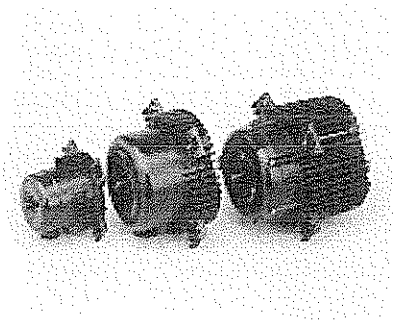

Mains supply voltage	Motor Type	Connection	Speed
SINGLE PHASE 220-240V 50Hz	230V 50Hz	-	High
THREE PHASE 220-240V 50Hz	230/400V 50Hz	△	High
		Y	Low*
THREE PHASE 380-415V 50Hz	230/400V 50Hz	Y	High
	400V 50Hz	△	High
		Y	Low*

*from sizes 450 up to 630 mm diameter.

Acoustic characteristics

The sound levels -NPS- illustrated in the tabulated performance data for the S&P COMPACT Plate Mounted Axial fans, correspond to the value of sound pressure dB(A), measured in free field conditions at a distance equivalent to three times the diameter of the impeller or a minimum of 1.5 meters whichever is the greater.
Sound power level spectrum in dB(A) at the corresponding octave band averages.

LwA ASP QMAX	63	125	250	500	1000	2000	4000	8000
2-250	50	61	68	73	74	74	67	58
2-315	51	62	82	77	85	85	79	71
2-355	58	63	87	83	89	92	86	79

LwA ASP QMAX	63	125	250	500	1000	2000	4000	8000
4-250	44	50	57	58	60	59	53	42
4-315	37	47	57	61	66	63	57	48
4-355	39	59	56	65	70	66	61	52
4-400	41	62	58	67	74	70	66	43
4-450	40	65	62	68	77	71	67	58
4-500	50	68	67	73	79	77	72	61
4-560	47	72	70	82	82	79	74	65
4-630	52	75	73	81	86	83	77	68
4-710	56	78	76	84	89	86	81	71
4-800/L	61	83	81	89	95	91	86	77
4-800/H	64	86	84	92	98	94	89	80
4-1000/L	68	90	88	96	102	98	93	84
4-1000/H	71	93	91	99	105	101	96	87

LwA ASP QMAX	63	125	250	500	1000	2000	4000	8000
6-355	39	45	46	52	53	54	48	37
6-400	34	46	49	59	60	60	53	41
6-450	35	50	52	61	64	62	56	45
6-500	39	52	55	63	67	65	59	49
6-560	41	55	60	67	71	70	64	53
6-630	43	59	62	70	71	69	67	56
6-710	51	65	68	77	80	79	73	62
6-800/L	56	70	73	82	85	84	78	67
6-800/H	58	72	75	84	87	86	80	69
6-1000/L	63	77	80	89	92	91	85	74
6-1000/H	66	80	83	92	95	94	88	77

LwA ASP QMAX	63	125	250	500	1000	2000	4000	8000
8-450	42	42	47	55	57	58	49	39
8-500	42	42	51	56	59	59	52	42
8-560	46	46	55	60	62	62	55	45
8-630	45	48	57	63	63	64	58	46
8-710	57	57	64	71	73	73	65	55
8-800/L	61	61	69	75	77	77	70	60
8-800/H	63	63	71	77	79	79	72	62
8-1000/L	68	68	76	82	84	84	77	67
8-1000/H	72	72	80	86	88	88	81	71

3/12/18

Technical characteristics with PLASTIC impellers

Type	Speed	Maximum power absorbed	Maximum current (A)		Sound pressure level	Maximum air volume	Weight	Speed* controller
	(r.p.m.)	(W)	at 230 V	at 400 V	(dB(A))	(m³/h)	(kg)	
			SINGLE PHASE 2 POLES					
HCFB/2-250/H	2500	250	1,2	–	65	2160	5	–
			SINGLE PHASE 4 POLES					
HCFB/4-250/H	1330	60	0,3	–	52	1215	5	REB-1
HCFB/4-315/H	1300	100	0,6	–	54	2350	7	REB-1
HCFB/4-355/H	1225	200	1,0	–	58	3490	8	REB-2,5
HCFB/4-400/H	1200	340	1,6	–	60	5070	9	REB-2,5
HCFB/4-450/H	1290	480	2,3	–	65	6760	13	REB-2,5
HCFB/4-500/H	1290	650	3,0	–	68	9200	16	REB-5N
HCFB/4-560/H	1250	980	4,9	–	71	12480	22	REB-5N
HCFB/4-630/H	1200	1700	7,6	–	72	17060	25	–
			SINGLE PHASE 8 POLES					–
HCFB/6-355/H	800	90	0,5	–	50	2210	8	REB-1
HCFB/6-400/H	750	110	0,6	–	52	3400	9	REB-1
HCFB/6-450/H	835	220	1,2	–	53	4550	13	REB-2,5
HCFB/6-500/H	840	290	1,6	–	56	5820	16	REB-2,5
HCFB/6-560/H	900	420	2,4	–	59	7870	22	REB-2,5
HCFB/6-630/H	800	510	2,6	–	60	10750	25	REB-5N
HCFB/6-710/H	900	1300	5,7	–	66	17570	27	–
			SINGLE PHASE 8 POLES					
HCFB/8-450/H	625	130	0,7		46	3500	13	REB-1
HCFB/8-500/H	605	160	0,9		49	4660	16	REB-1
HCFB/8-560/H	610	240	1,3		52	5990	22	REB-2,5
HCFB/8-630/H	585	320	1,7		53	8340	25	REB-2,5
HCFB/8-710/H	625	480	2,4		59	11960	27	–
			THREE PHASE 2 POLES					
HCFT/2-250/H	2500	250	0,9	0,5	65	2160	5	–
			THREE PHASE 4 POLES					
HCFT/4-250/H	1330	60	0,3	0,2	52	1220	5	RMT-1,5
HCFT/4-315/H	1300	150	0,6	0,3	54	2350	7	RMT-1,5
HCFT/4-355/H	1260	200	0,8	0,5	58	3490	8	RMT-1,5
HCFT/4-400/H	1350	300	1,4	0,8	60	5070	9	RMT-1,5
HCFT/4-450/H	1230	500	1,7	1,0	65	6760	13	RMT-1,5
HCFT/4-500/H	1350	660	2,7	1,6	68	9200	16	RMT-3,5
HCFT/4-560/H	1320	1210	3,9	2,3	71	12480	22	RMT-3,5
HCFT/4-630/H	1420	1550	5,2	3,0	72	17060	25	–
HCFT/4-710/H	1350	2200	7,0	4,0	75	22150	27	–
HCFT/4-800/L-X (1,5kW)	1420	2300	6,6	3,8	79	24960	37	–
HCFT/4-800/H-X (3kW)	1430	4200	12,6	7,3	82	32600	52	–
HCFT/4-1000/L-X (3kW)	1400	4400	12,3	7,1	84	42000	67	–
HCFT/4-1000/H-X (5,5kW)	1460	7200	–	12,0	87	54000	95	–
			THREE PHASE 6 POLES					
HCFT/6-355/H	875	90	0,5	0,3	50	2210	8	RMT-1,5
HCFT/6-400/H	830	110	0,5	0,3	52	3400	9	RMT-1,5
HCFT/6-450/H	835	190	0,8	0,5	53	4550	13	RMT-1,5
HCFT/6-500/H	840	250	0,9	0,5	56	5820	16	RMT-1,5
HCFT/6-560/H	900	410	1,6	0,9	59	8260	22	RMT-1,5
HCFT/6-630/H	810	460	2,0	1,2	60	11000	25	RMT-1,5
HCFT/6-710/H	920	1100	4,9	2,8	66	16500	27	–
HCFT/6-800/L-X (0,55kW)	900	1180	3,9	2,2	70	19370	31	–
HCFT/6-800/H-X (0,75kW)	940	1220	4,3	2,5	72	22000	36	–
HCFT/6-1000/L-X (1,1kW)	940	1400	5,6	3,2	75	28000	54	–
HCFT/6-1000/H-X (1,5kW)	950	2330	7,6	4,4	78	36400	62	–
			THREE PHASE 8 POLES					
HCFT/8-450/H	660	130	0,7	0,4	46	3500	13	RMT-1,5
HCFT/8-500/H	625	150	0,7	0,4	49	4660	16	RMT-1,5
HCFT/8-560/H	610	230	1,0	0,6	52	5990	22	RMT-1,5
HCFT/8-630/H	635	310	1,3	0,8	53	8340	25	RMT-1,5
HCFT/8-710/H	670	450	2,0	1,2	59	11960	27	–
HCFT/8-800/L-X (0,25kW)	710	580	2,2	1,3	63	14000	63	–
HCFT/8-800/H-X (0,37kW)	690	700	3,0	1,7	65	17160	64	–
HCFT/8-1000/L-X (0,37kW)	700	720	3,0	1,7	68	20490	68	–
HCFT/8-1000/H-X (0,75kW)	725	1100	4,6	2,7	72	27040	71	–

* Three phase speed controllers (RMT) are suitable for 400 V 50 Hz electrical connection only.

3/12/18

Technical characteristics with ALUMINIUM impellers

Type	Speed	Maximum power absorbed	Maximum current absorbed (A)		Sound pressure level	Maximum air volume	Weight	Speed* controller
	(r.p.m.)	(W)	at 230 V	at 400 V	(dB(A))	(m³/h)	(kg)	
SINGLE PHASE 2 POLES								
HCBB/2-250/H	2500	250	1,2	–	65	2160	5	–
HCBB/2-315/H (0,37kW)	2550	730	3,6	–	75	4800	8	–
HCBB/2-355/H (0,55kW)	2500	1200	5,0	–	81	7000	9	–
SINGLE PHASE 4 POLES								
HCBB/4-250/H	1330	60	0,3	–	52	1215	5	REB-1
HCBB/4-315/H	1300	100	0,6	–	54	2350	7	REB-1
HCBB/4-355/H	1225	200	1,0	–	58	3490	8	REB-2,5
HCBB/4-400/H	1200	340	1,6	–	60	5070	9	REB-2,5
HCBB/4-450/H	1290	480	2,3	–	65	6760	13	REB-2,5
HCBB/4-500/H	1290	650	3,0	–	68	9200	16	REB-5N
HCBB/4-560/H	1250	980	4,9	–	71	12480	22	REB-5N
HCBB/4-630/H	1200	1700	7,6	–	72	17060	25	–
SINGLE PHASE 6 POLES								–
HCBB/6-355/H	800	90	0,5	–	50	2210	8	REB-1
HCBB/6-400/H	750	110	0,6	–	52	3400	9	REB-1
HCBB/6-450/H	835	220	1,2	–	53	4550	13	REB-2,5
HCBB/6-500/H	840	290	1,6	–	56	5820	16	REB-2,5
HCBB/6-560/H	900	420	2,4	–	59	7870	22	REB-2,5
HCBB/6-630/H	800	510	2,6	–	60	10750	25	REB-5N
HCBB/6-710/H	900	1300	5,7	–	66	17570	27	–
SINGLE PHASE 8 POLES								
HCBB/8-450/H	625	130	0,7		46	3500	13	REB-1
HCBB/8-500/H	605	160	0,9		49	4660	16	REB-1
HCBB/8-560/H	610	240	1,3		52	5990	22	REB-2,5
HCBB/8-630/H	585	320	1,7		53	8340	25	REB-2,5
HCBB/8-710/H	625	480	2,4		59	11960	27	–
THREE PHASE 2 POLES								
HCBT/2-250/H	2500	250	0,9	0,5	65	2160	5	–
HCBT/2-315/H (0,37kW)	2750	750	2,1	1,2	75	4800	8	–
HCBT/2-355/H (0,55kW)	2700	1200	3,3	1,9	81	7000	9	–
THREE PHASE 4 POLES								
HCBT/4-250/H	1330	60	0,3	0,2	52	1220	5	RMT-1,5
HCBT/4-315/H	1300	150	0,6	0,3	54	2350	7	RMT-1,5
HCBT/4-355/H	1260	200	0,8	0,5	58	3490	8	RMT-1,5
HCBT/4-400/H	1350	300	1,4	0,8	60	5070	9	RMT-1,5
HCBT/4-450/H	1230	500	1,7	1,0	65	6760	13	RMT-1,5
HCBT/4-500/H	1350	660	2,7	1,6	68	9200	16	RMT-3,5
HCBT/4-560/H	1320	1210	3,9	2,3	71	12480	22	RMT-3,5
HCBT/4-630/H	1420	1550	5,2	3,0	72	17060	25	–
HCBT/4-710/H	1350	2200	7,0	4,0	75	22150	27	–
HCBT/4-800/L-X (1,5kW)	1420	2300	6,6	3,8	79	24960	37	–
HCBT/4-800/H-X (3kW)	1430	4200	12,6	7,3	82	32600	52	–
HCBT/4-1000/L-X (3kW)	1400	4400	12,3	7,1	84	42000	67	–
HCBT/4-1000/H-X (5,5kW)	1460	7200	–	12,0	87	54000	95	–
THREE PHASE 6 POLES								
HCBT/6-355/H	875	90	0,5	0,3	50	2210	8	RMT-1,5
HCBT/6-400/H	830	110	0,5	0,3	52	3400	9	RMT-1,5
HCBT/6-450/H	835	190	0,8	0,5	53	4550	13	RMT-1,5
HCBT/6-500/H	840	250	0,9	0,5	56	5820	16	RMT-1,5
HCBT/6-560/H	900	410	1,6	0,9	59	8260	22	RMT-1,5
HCBT/6-630/H	810	460	2,0	1,2	60	11000	25	RMT-1,5
HCBT/6-710/H	920	1100	4,9	2,8	66	16500	27	–
HCBT/6-800/L-X (0,55kW)	900	1180	3,9	2,2	70	19370	31	–
HCBT/6-800/H-X (0,75kW)	940	1220	4,3	2,5	72	22000	36	–
HCBT/6-1000/L-X (1,1kW)	940	1400	5,6	3,2	75	28000	54	–
HCBT/6-1000/H-X (1,5kW)	950	2330	7,6	4,4	78	36400	62	–
THREE PHASE 8 POLES								
HCBT/8-450/H	660	130	0,7	0,4	46	3500	13	RMT-1,5
HCBT/8-500/H	625	150	0,7	0,4	49	4660	16	RMT-1,5
HCBT/8-560/H	610	230	1,0	0,6	52	5990	22	RMT-1,5
HCBT/8-630/H	635	310	1,3	0,8	53	8340	25	RMT-1,5
HCBT/8-710/H	670	450	2,0	1,2	59	11960	27	–
HCBT/8-800/L-X (0,25kW)	710	580	2,2	1,3	63	14000	63	–
HCBT/8-800/H-X (0,37kW)	690	700	3,0	1,7	65	17160	64	–
HCBT/8-1000/L-X (0,37kW)	700	720	3,0	1,7	68	20490	68	–
HCBT/8-1000/H-X (0,75kW)	725	1100	4,6	2,7	72	27040	71	–

* Three phase speed controllers (RMT) are suitable for 400 V 50 Hz electrical connection only.

3/12/18

Installation

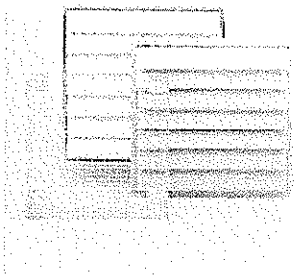

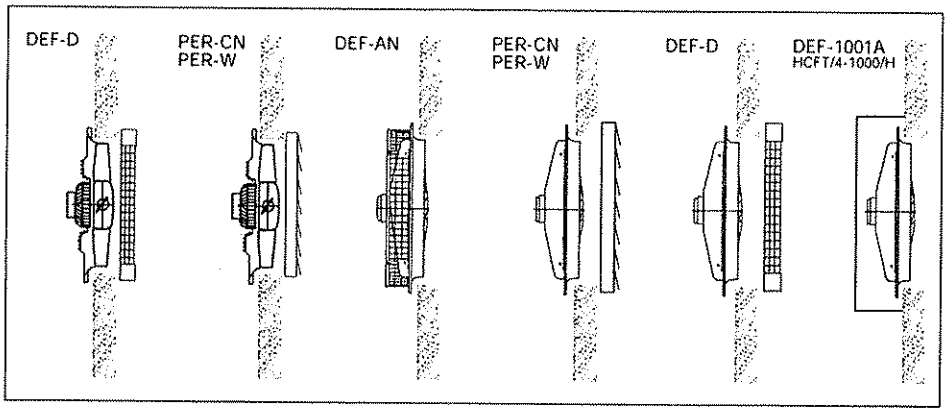

Compact model Type	Wire Protection Guards		Exhaust Side Louvre Shutters	
	Outlet	Inlet	Plastic	Aluminium
HCFB / HCFT 250	DEF-250 D	-	PER-250 W	PER-250 CN
HCFB / HCFT 315	DEF-325 D	-	PER-355 W	PER-355 CN
HCFB / HCFT 355	DEF-375 D	-	PER-355 W	PER-355 CN
HCFB / HCFT 400	DEF-450 D	-	PER-400 W	PER-400 CN
HCFB / HCFT 450	DEF-450 D	-	PER-450 W	PER-450 CN
HCFB / HCFT 500	DEF-525 D	-	PER-500 W	PER-500 CN
HCFB / HCFT 560	DEF-630 D	-	PER-560 W	PER-630 CN
HCFB / HCFT 630	DEF-630 D	-	PER-630 W	PER-630 CN
HCFB / HCFT 710	DEF-800 D	-	PER-710 W	PER-710 CN
HCFT 800	DEF-800 D	DEF- 800 AN	PER-800 W	PER-800 CN
HCFT 1000	DEF-1000 D	DEF-1000 AN	PER-1000 W	PER-1000 CN
HCFT / 4-1000 / H	DEF-1000 D	DEF-1001 A	PER-1000 W	PER-1000 CN

Electrical accessories

REB
Electronic, single phase speed controller.
See accessories pages for further details.

RMB/RMT
Auto transformer, single and three phase speed controller.
See accessories pages for further details.

Dimensions (mm)

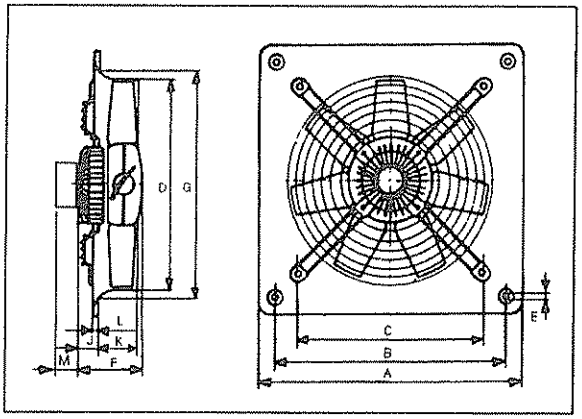

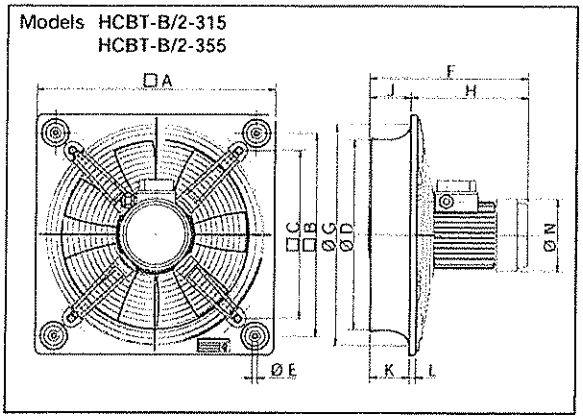

Type	⊠ A	⊠ B	⊠ C	Ø D	Ø E	F Number of Poles /2	F /4	F /6	F /8	Ø G	J Number of Poles /2	J /4	J /6	J /8	K	L	M 3 Ph	M 1 Ph
250	315	260	220	254	10	122	122			294	59	59			53	12	40	65
315	400	330	280	315	10		122			329		32			68	12	40	65
355	450	380	315	355	10		129	129		371		45	45		75	12	40	65
400	500	420	355	400	10		129	129		422		40,5	40,5		78	12	40	65
450	560	480	400	450	10		150	150	150	476		48	48	48	91	12	40	65
500	630	560	450	500	10		150	150	150	536		44,5	44,5	44,5	97	12	40	65
560	710	630	510	560	10		218,5	150	150	596		110,5	42	42	98,5	12	40	65
630	800	710	580	630	12		218,5	150	150	674		110,5	41	41	103	12	40	65
710	900	800	636	710	12		218,5	218,5	218,5	733		134	134	134	91,5	16,5	40	65

Type	⊠ A	⊠ B	⊠ C	Ø D	Ø E	F	Ø G	H	J	K	L	Ø N
HCBT-B/2-315	400	330	280	315	10	298	329	220,5	77,5	68	12	135
HCBT-B/2-355	450	380	315	355	10	298	371	219	79	75	12	135

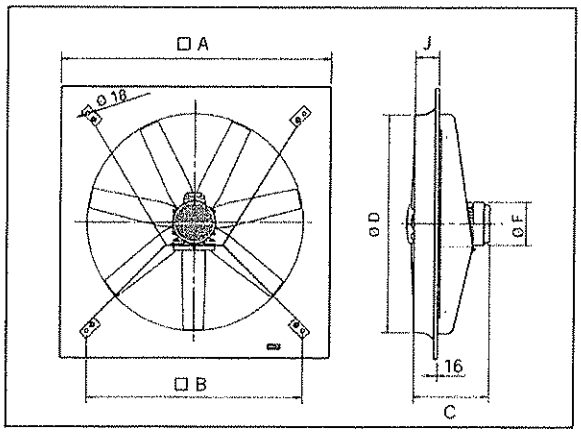

Type	⊠ A	⊠ B	Ø D	J	E	Ø G	C /4 L	C /4 H	C /6 L	C /6 H	C /8 L	C /8 H	Ø F /4 L	Ø F /4 H	Ø F /6 L	Ø F /6 H	Ø F /8 L	Ø F /8 H
HCBT-800	1000	800	800	92	189	926	345	380	310	345	310	345	181	203	162	181	162	181
HCBT-1000	1250	1000	1000	110	174	1154	380	-	345	380	345	380	203	-	181	203	181	203

3/12/18

Performance curves - HCFB/HCFT - HCBB/HCBT

- Q = Air volume in, m^3/hr and m^3/s
- Pe = Static pressure in mmWG and Pa.
- Dry air at 20 °C and 760 mmHg.
- Air flow data in accordance with the following standards: UNE 100-212-89, BS 848, Part 1, AMCA 210-85 and ASHRAE 51-1985.

Typical fan selection:

Do not select an airflow performance in the area of the graph left of the dashed line (as shown to the right – coloured area).
To find the working point of the fan at a required volume, it is first necessary to plot a system resistance curve. The working point of the fan lies at the intersection of the system resistance curve and that of the fan performance curve – as illustrated to the right.

Example: Required air volume 10,000 m^3/h at 3 mmWG.
Fan working point 11,300 m^3/h at 4 mmWG.

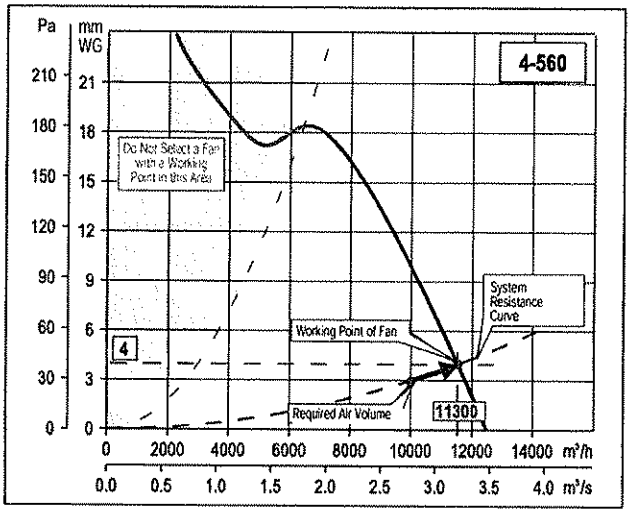

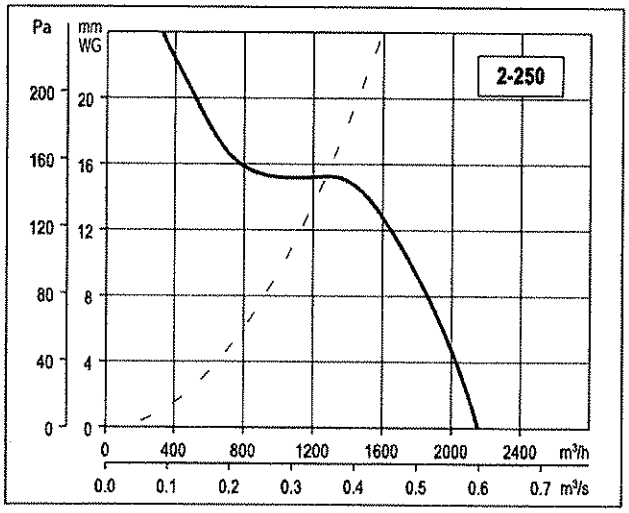

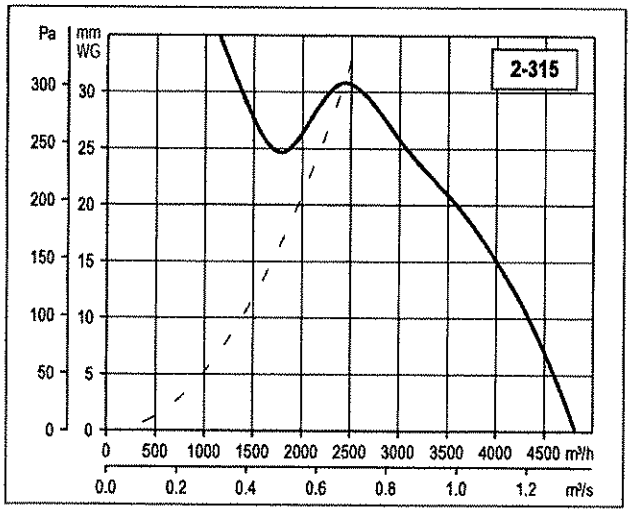

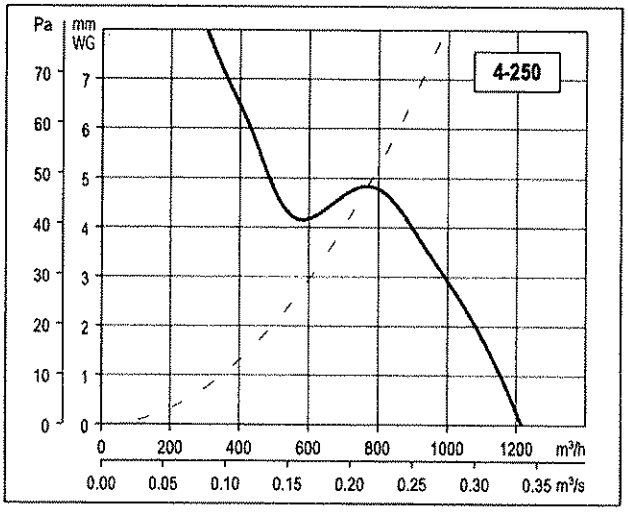

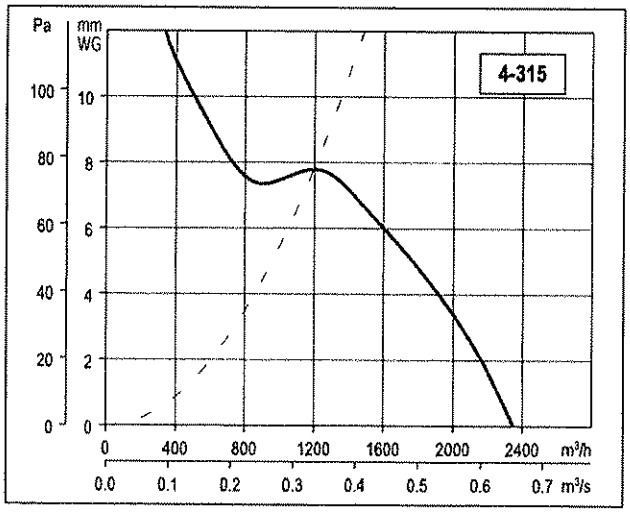

3/12/18

Performance curves - HCFB/HCFT - HCBB/HCBT

- Q = Air volume in, m^3/hr and m^3/s
- Pe = Static pressure in mmWG and Pa.
- Dry air at 20 °C and 760 mmHg.
- Air flow data in accordance with the following standards: UNE 100-212-89, BS 848, Part 1, AMCA 210-85 and ASHRAE 51-1985.

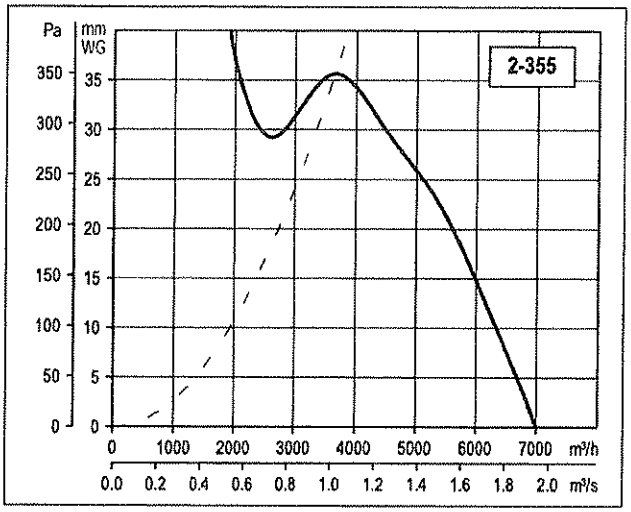

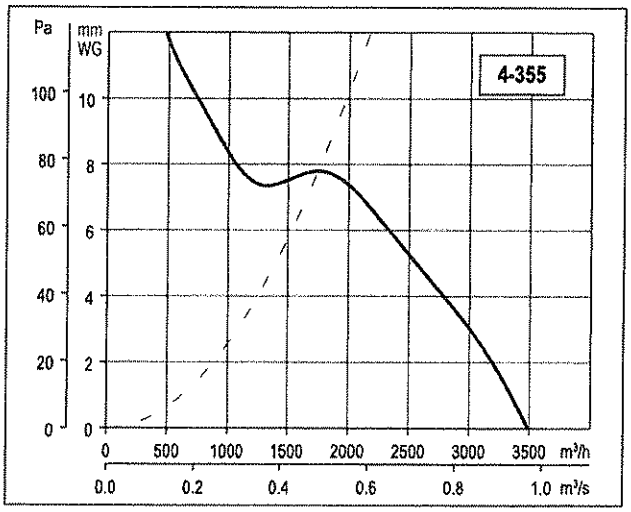

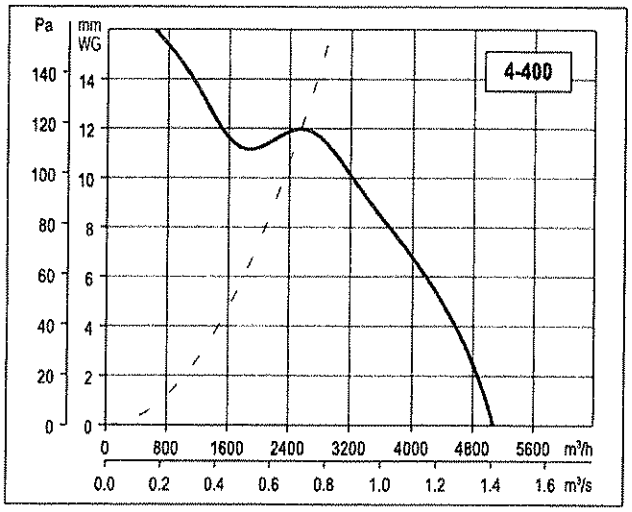

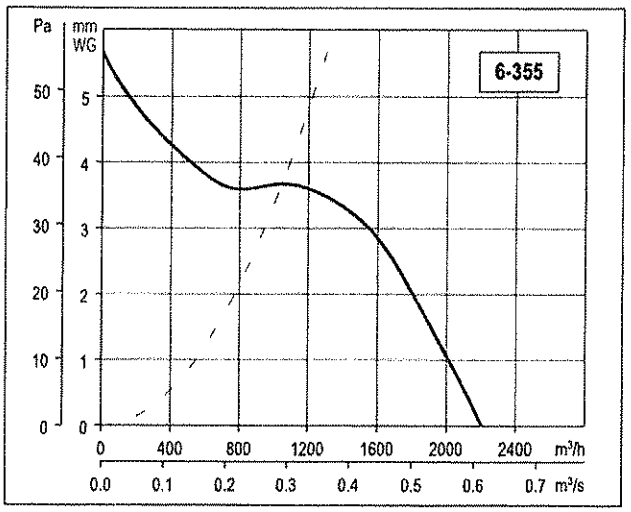

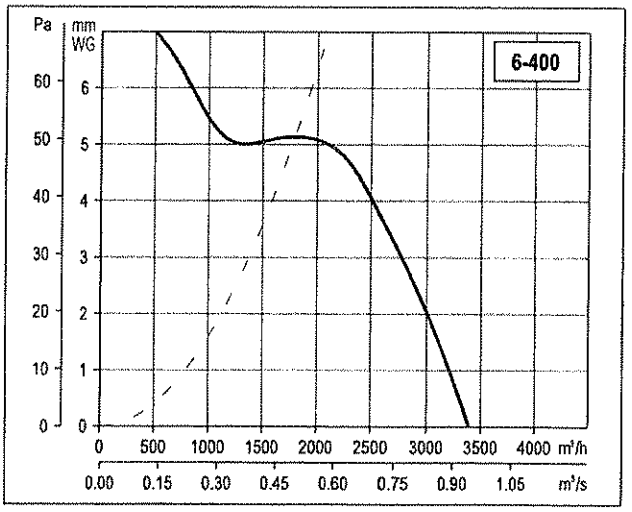

3/12/18

Performance curves - HCFB/HCFT - HCBB/HCBT

- Q = Air volume in, m^3/hr and m^3/s
- Pe = Static pressure in mmWG and Pa.
- Dry air at 20 °C and 760 mmHg.
- Air flow data in accordance with the following standards: UNE 100-212-89, BS 848, Part 1, AMCA 210-85 and ASHRAE 51-1985.

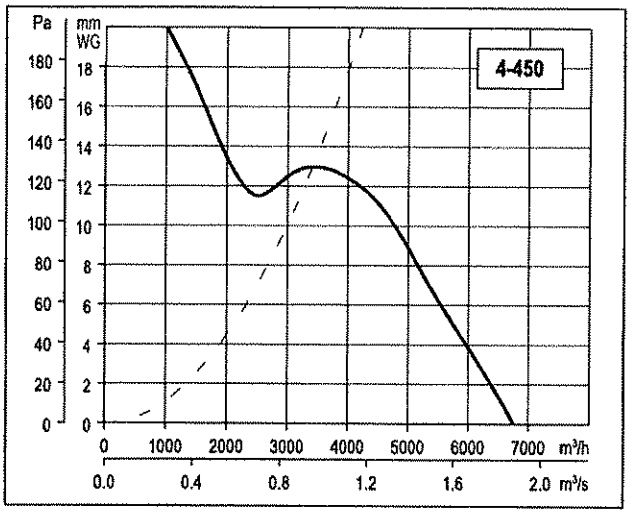

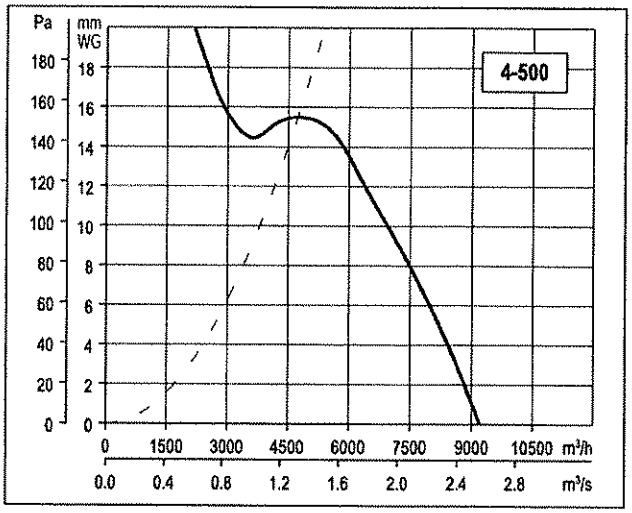

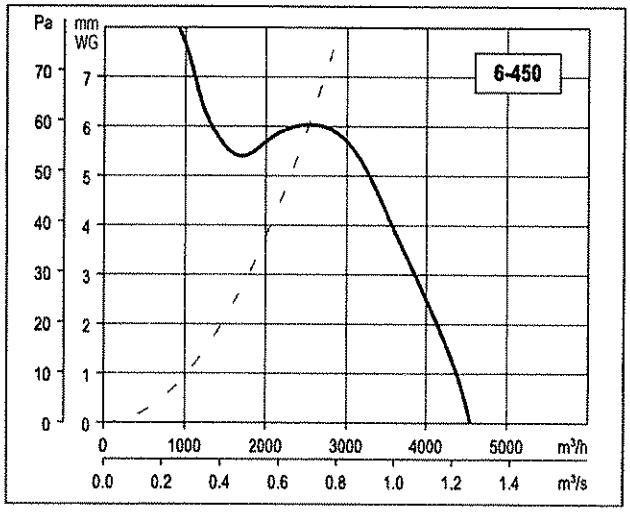

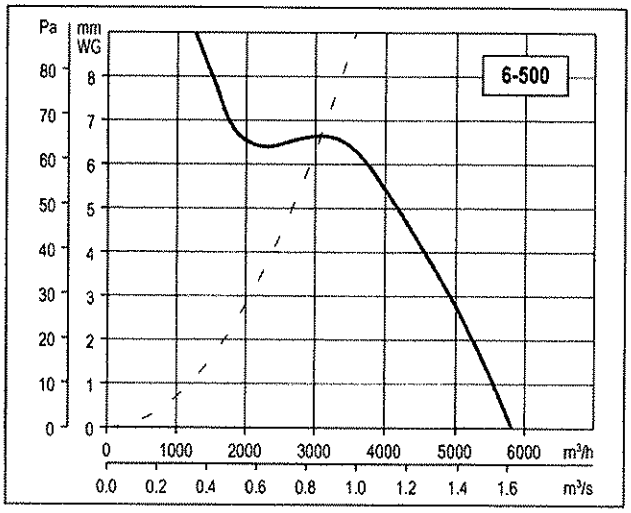

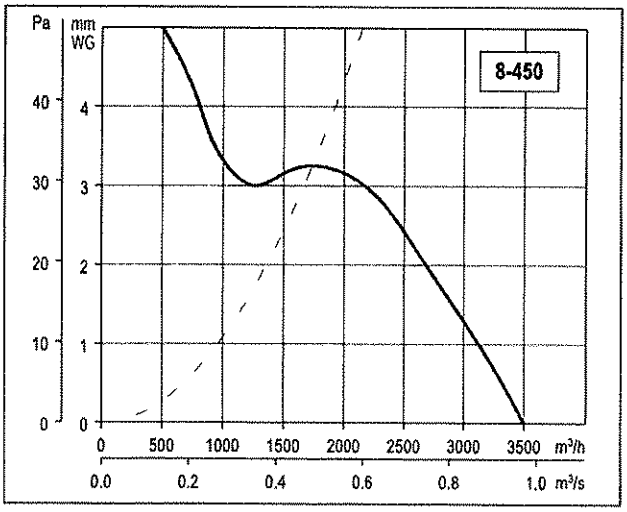

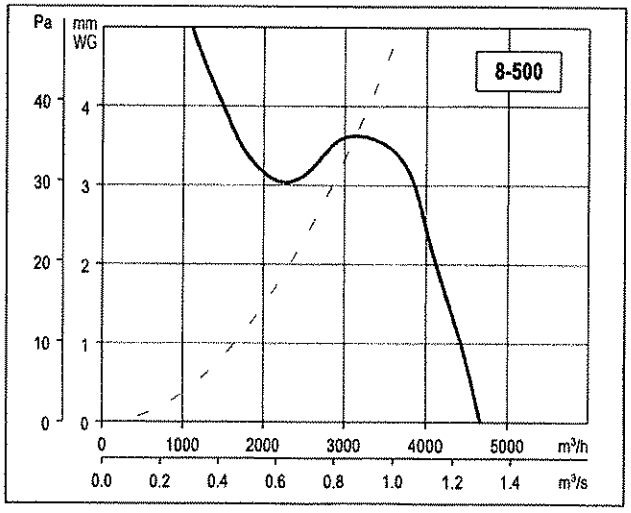

Performance curves - HCFB/HCFT - HCBB/HCBT

- Q = Air volume in, m^3/hr and m^3/s
- Pe = Static pressure in mmWG and Pa.
- Dry air at 20 °C and 760 mmHg.
- Air flow data in accordance with the following standards: UNE 100-212-89, BS 848, Part 1, AMCA 210-85 and ASHRAE 51-1985.

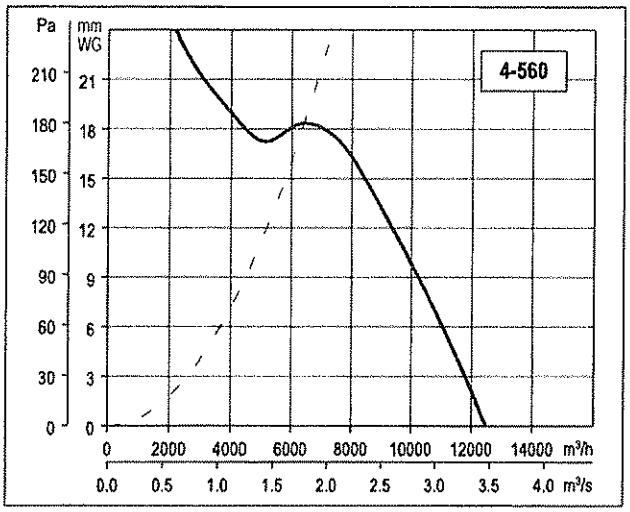

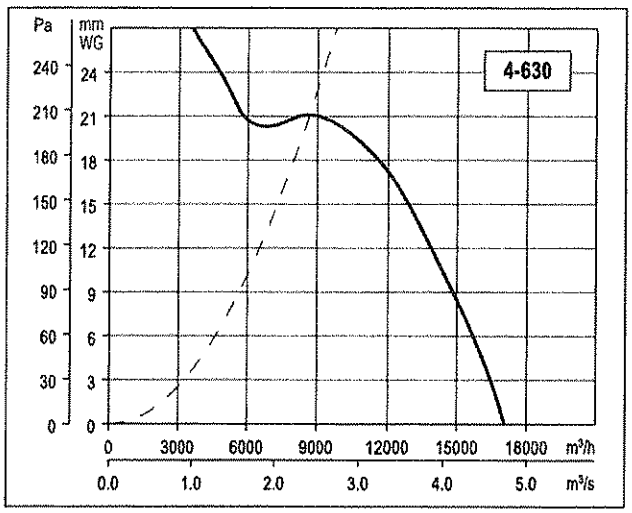

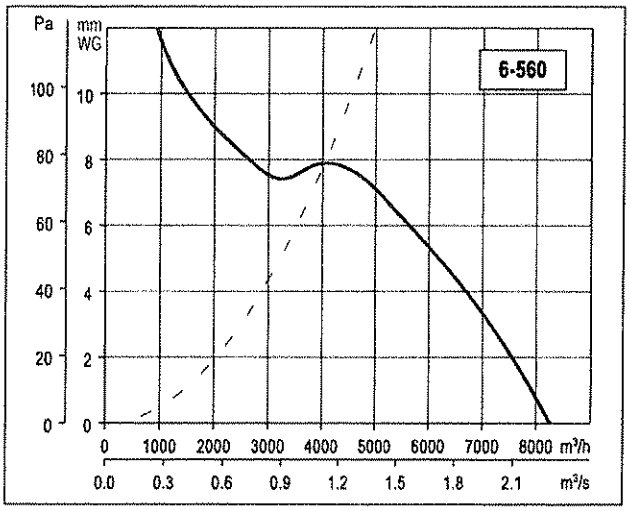

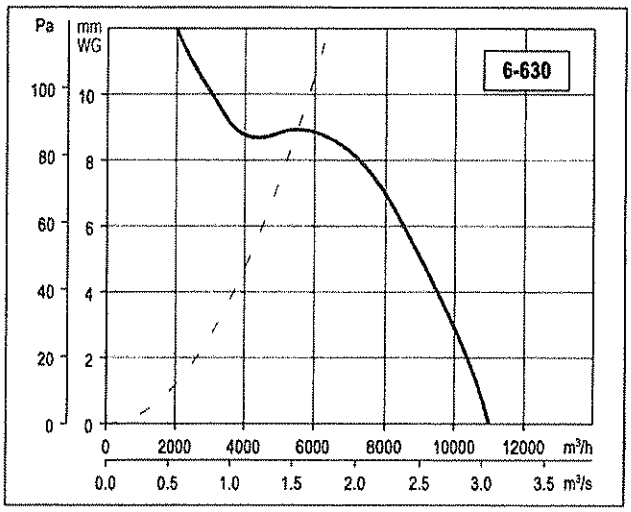

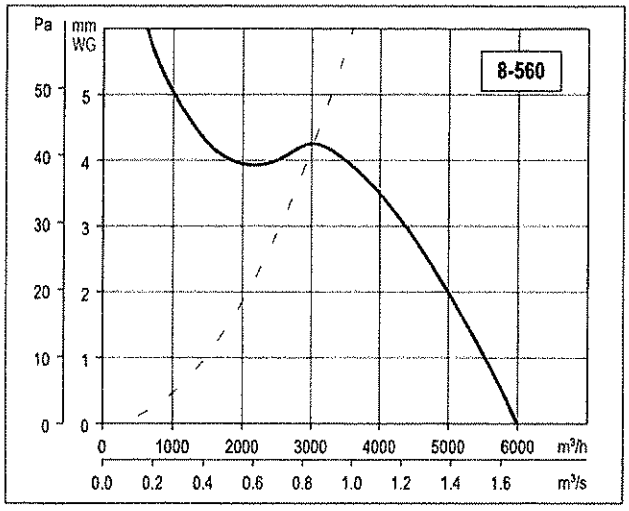

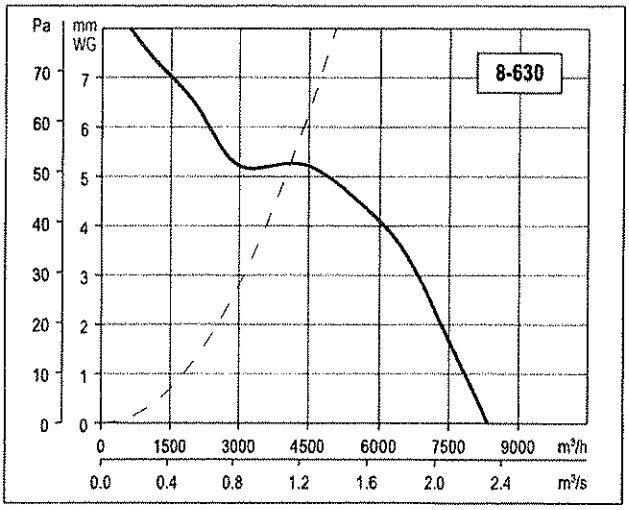

3/12/18

Performance curves - HCFB/HCFT - HCBB/HCBT

- Q = Air volume in, m^3/hr and m^3/s
- Pe = Static pressure in mmWG and Pa.
- Dry air at 20 °C and 760 mmHg.
- Air flow data in accordance with the following standards: UNE 100-212-89, BS 848, Part 1, AMCA 210-85 and ASHRAE 51-1985.

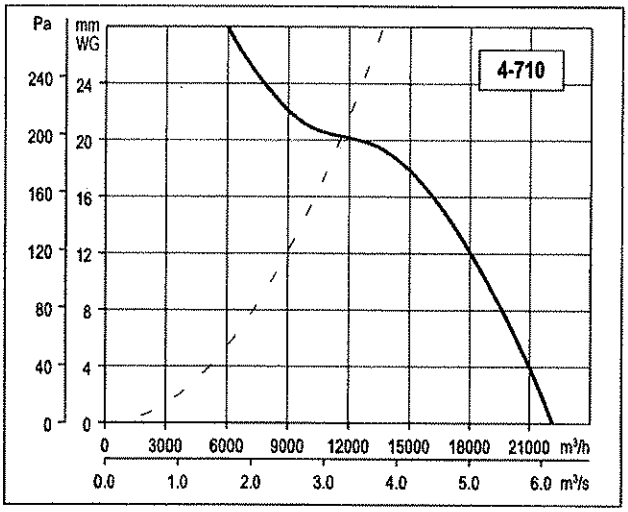

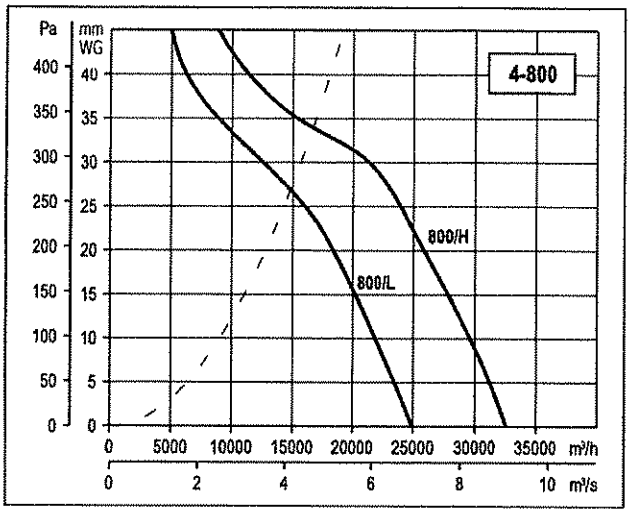

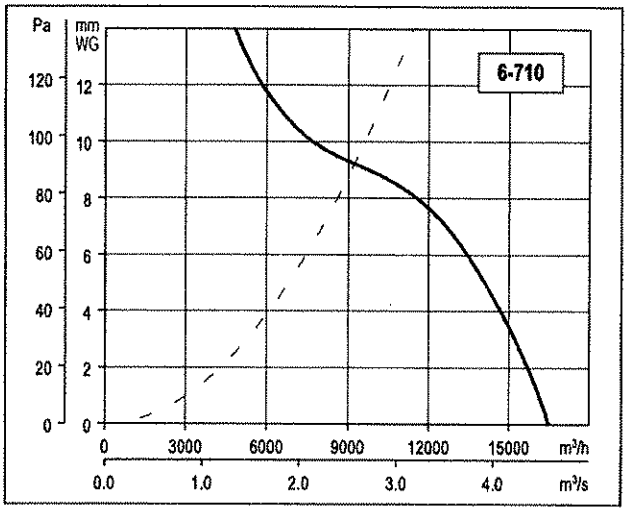

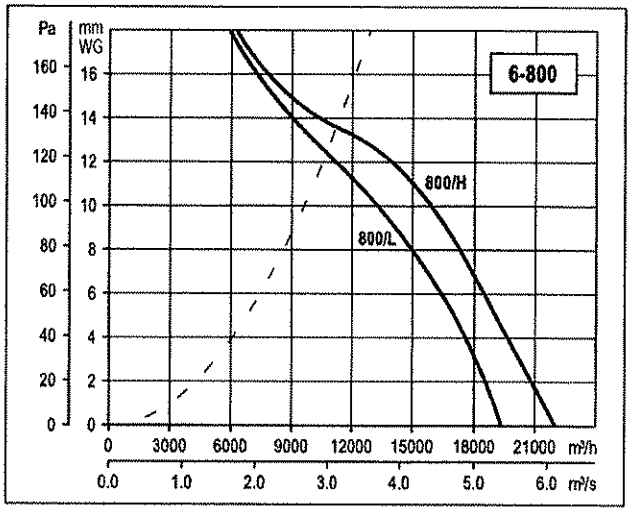

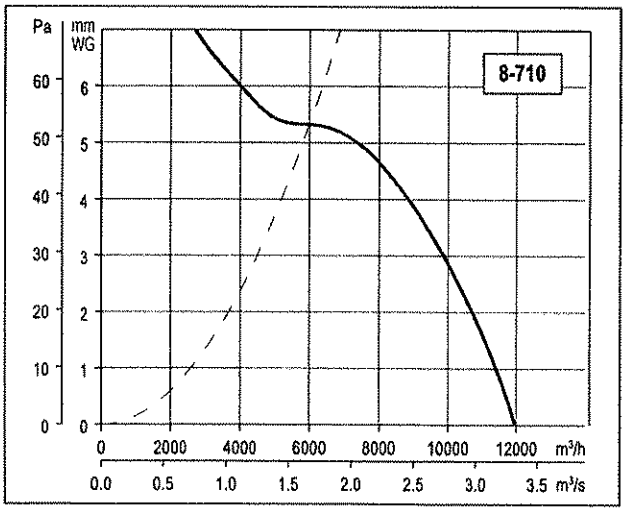

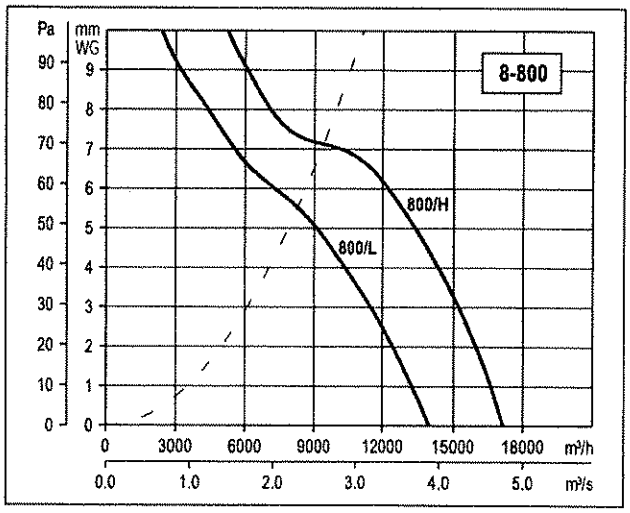

Performance curves - HCFB/HCFT - HCBB/HCBT

- Q = Air volume in, m^3/hr and m^3/s
- Pe = Static pressure in mmWG and Pa.
- Dry air at 20 °C and 760 mmHg.
- Air flow data in accordance with the following standards: UNE 100-212-89, BS 848, Part 1, AMCA 210-85 and ASHRAE 51-1985.

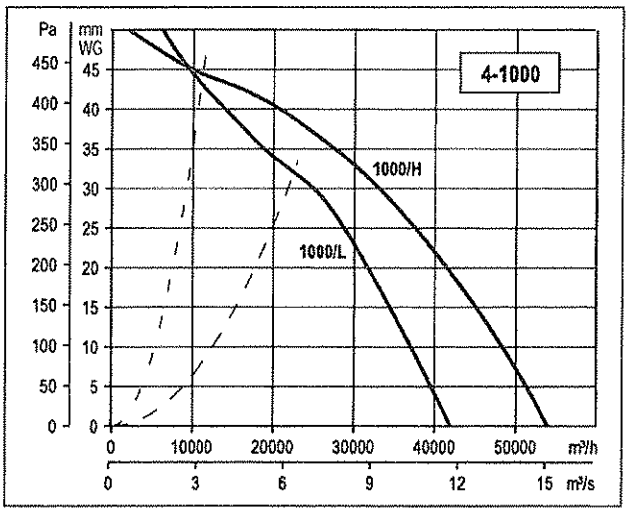

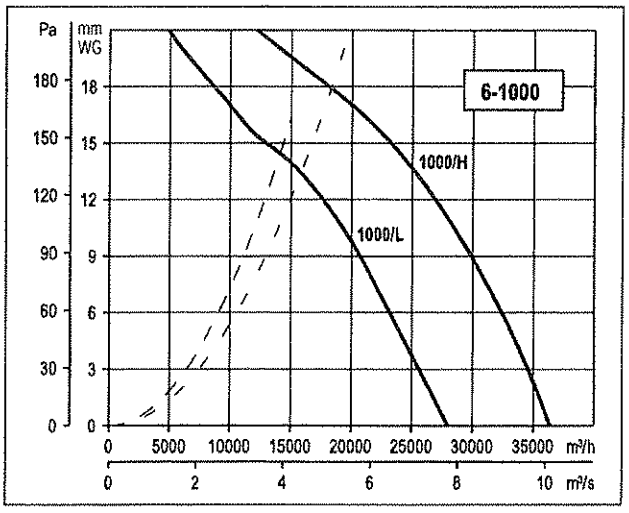

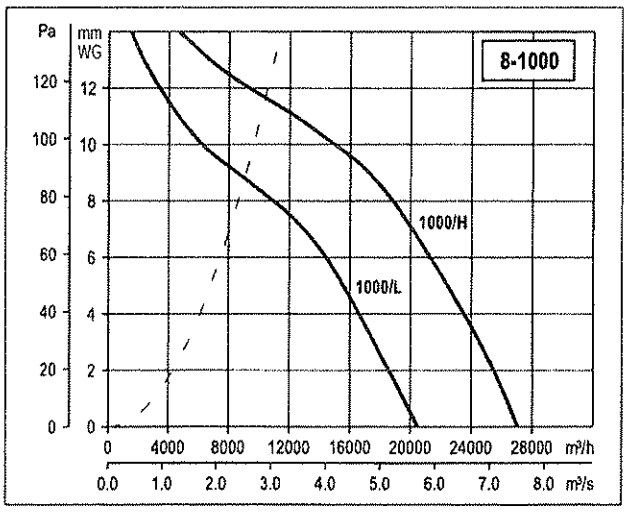

31/12/18

SANITAIRE
a xylem brand

Aeration Design Analysis

KARKANIAS AERATION 2

Created by: Michalis Roubeas

3/12/18

Project Information

Project name	KARKANIAS AERATION 2
Project number	
Project description	
Customer name	
Rep/Distributor name	
WWTP name	
WWTP location	
Sales company	IDATOR WASTEWATER SA
Created by	WORLD\MROUMBEA
Design engineer	Michalis Roubeas
Modified by	WORLD\MROUMBEA
Creation date	9/6/2017
Modification date	9/6/2017

3/12/18

Project Input Data

Tank Geometries

Parameter	Unit	Tank 1:Pass 1	Tank 1:Pass 2			
Tank geometry (7), (8)		Racetrack	Racetrack			
No of zones		2	2			
Divider wall length	m	21	21			
Channel width	m	4.525	4.525			
Divider wall thickness	m	0.3	0.3			
Water depth	m	5	5			

Design Conditions

Parameter	Unit	System condition 1				
Design based on		SOR				
Oxygen requirement	kg/h	72				

Standard Oxygen Correction Factors

Site elevation	m	0				
Ambient pressure	kPa	101.3				
Water temperature	C	20				

Oxygen/Air Distribution

Distribution	Tank 1:Pass 1:Zone 1	Tank 1:Pass 1:Zone 2	Tank 1:Pass 2:Zone 1	Tank 1:Pass 2:Zone 2	Total	
Distribution 1	50	0	50	0	100%	

3/19/18

Design Summary

Performance Data

Parameter	Unit	System condition 1 : Distribution 1				
No. of operating disc diffusers		192				
SOR	kg/h	72				
SOTE average	%	31.01				
Total air flow (9)	Nm³/h	774.5				
Air flow per diffuser, min (9)	Nm³/h	4.03				
Air flow per diffuser, max (9)	Nm³/h	4.03				
Top of dropleg pressure, max (4)	kPa	53.2				
Diffuser DWP at min air	kPa	4.18				
Diffuser DWP at max air	kPa	4.18				
Dropleg velocity at min air	m/s	9.68				
Dropleg velocity at max air	m/s	9.68				

Equipment and Grid Design Information

Parameter	Unit	Tank 1:Pass 1:Zone 1	Tank 1:Pass 2:Zone 1			
Product		9" SSII 2802	9" SSII 2802			
Grid count		1	1			
No of operating disc diffusers per grid		96	96			
Header count per grid		6	6			
Dropleg/Manifold		110mm PVC	110mm PVC			
At/Ad number		8.662	8.662			

Notes:

3/12/18

Detailed Performance Data

System condition 1 : Distribution 1

Input Data

Parameter	Unit	Tank 1:Pass 1:Zone 1	Tank 1:Pass 2:Zone 1			
Floor length	m	7	7			
Floor width	m	4.525	4.525			
Water depth	m	5	5			
Submergence	m	4.77	4.77			
Volume	m^3	158.4	158.4			
Distribution	%	50	50			
SOR	kg/h	36	36			
Water temperature	C	20	20			

Performance Data

Safety factor	%	0	0			
Mixing criteria	$Nm^3/h/m$	2.04	2.04			
Mixing air (9)	Nm^3/h	64.567	64.567			
Process air (for SOR) (9)	Nm^3/h	387.25	387.25			
Design air (1), (9)	Nm^3/h	387.25	387.25			
Air flow per diffuser, (9)	Nm^3/h	4.03	4.03			
Delivered SOR (2)	kg/h	36	36			
Actual Distribution	%	50	50			
Delivered SOTE (3)	%	31.01	31.01			
Top of dropleg pressure (4)	kPa	53.2	53.2			
Dropleg velocity	m/s	9.68	9.68			

3/12/18

Headloss Summary

System condition 1 : Distribution 1

Grid Design

Parameter	Unit	Tank 1:Pass 1:Zone 1	Tank 1:Pass 2:Zone 1			
Grid count		1	1			
No. of disc diffusers per grid		96	96			
Dropleg/Manifold		110mm PVC	110mm PVC			
Header count per grid		6	6			
Header spacing	mm	435	435			
Manifold length	m	2.17	2.17			
Header length	m	5.43	5.43			
Manifold location		End	End			
Dropleg location		End	End			

Grid Pressure

Air flow per grid (9)	Nm³/h	387.25	387.25			
Diffuser air flow (9)	Nm³/h	4.03	4.03			
Submergence	m	4.77	4.77			
Orifice diameter	mm	5 mm	5 mm			
Static header pressure differential in assembly	kPa	6.14E-2	6.14E-2			
Average header pressure in assembly	kPa	53.127	53.127			
A: Average Headloss from top of dropleg to headers	kPa	1.03E-1	1.03E-1			
B: Diffuser orifice headloss	kPa	2.21E+0	2.21E+0			
C: Diffuser dynamic wet pressure	kPa	4.18E+0	4.18E+0			
D: Static pressure	kPa	46.735	46.735			
Total pressure required at top of dropleg (A+B+C+D)	kPa	53.23	53.23			
Friction headloss (A+B)	kPa	2.31E+0	2.31E+0			

3/12/18

Notes

(1)	Design air is the maximum of process air or mixing air.
(2)	Delivered oxygen based on design air.
(3)	Performance based on diffuser density (At/Ad), submergence, and diffuser unit air flow.
(4)	The pressure at top of dropleg is defined above the water surface, including a 90° elbow.
(5)	The pressure at bottom of dropleg is defined under the water surface, where the PVC plastic dropleg pipe connects to the stainless steel dropleg pipe.
(6)	If the AOR/SOR parameter is not given, then its value will be evaluated later if suitable alpha, beta, D.O., theta, pressure, and temperature data is supplied.
(7)	Round tanks are evaluated as rectangular tanks diameter equal to length and equal surface area.
(8)	Annular tanks are evaluated as rectangular tanks of width equal to the annular width and equal surface area.
(9)	Nm^3/h, air flow defined at 0°C.
(10)	Specified volume is used to design basins with irregular geometries. Specified volume can also be given directly by the client. By default, Xylem calculates basin volume with standard formulas for regular solids given basin footprint dimensions and water depth.

3/12/18

AOR/SOR Calculation

The ratio of actual site oxygen transfer to standard condition oxygen transfer, (AOR/SOR), is dependent on a number of factors:

20°C:	Standard Condition Temperature	Beta:	Field/Std. Condition O2 Saturation Ratio
T°C:	Operating Water Temperature	Theta:	Operating Water Temperature Factor
P_{std}:	Std. Condition Ambient Pressure (1 Atmosphere)	DO:	Operating Oxygen Concentration
C_{surfT}:	Clearwater Surface O2 Saturation at operating Temperature	C^*_{sat20}:	Std. Condition Aerated O2 Saturation in the tank
P_{site}:	Site Ambient Pressure	9.09:	Clearwater Surface o2 Saturation av 20C
Alpha:	Field/std. Condition KIA Ratio		

$$\frac{AOR}{SOR} = \frac{\alpha\theta^{(T-20)}\left[\beta C^*_{sat20}\left(\frac{P_{site}}{Pstd}\right)\left(\frac{C_{surfT}}{9.09}\right) - DO\right]}{C^*_{sat20}}$$

3/12/18

Glossary of Terms

# Zones	Number of taper zones or zones of unique diffuser count in the pass.
Air Distribution Header	Pipes connecting to the manifold to which the diffusers are mounted. In the case of PVC systems, the diffuser holders are glued onto the crown or top of the air distribution header. For stainless steel systems, diffuser connectors are welded onto the invert or bottom of the pipe.
Air Header	See Air Distribution Header.
Annular Tank	Sometimes called a doughnut tank. This tank consists of a center circular tank, commonly a clarifier and an outer wall. The resulting annulus is segregated into compartments for process functions like digestion or aeration.
At/Ad	The ratio of tank area over the fine bubble diffuser area. The reciprocal of At/Ad is the percentage of floor coverage by fine bubble diffusers.
Center Wall Width	Thickness of the dividing wall for an oxidation ditch.
Channel Width	For ditch geometry, channel width refers to the dimension between the dividing wall and the outer wall of the ditch.
Delivered SOR	The Standard Condition Oxygen transfer rate delivered at the Design Air flow rate.
Delivered SOTE	The Standard Oxygen Transfer Efficiency at the Delivered SOR and Process air rate.
Design Air	The air flow used to determine system performance. It is the maximum of the Mixing Air and Process Air.
Dropleg	Vertical pipe connecting air main at top of tank to the floor mounted aeration equipment.
Floor Length	For Slope wall tanks, refers to the length measured at the floor of the basin. Aeration design uses this value in designing the piping layout.
Floor Width	For Slope wall tanks, refers to the width measured at the floor of the basin. Aeration design uses this value in designing the piping layout.
Geometry	Refers to general shape of the tank: Rectangular (Square), Circular, Slope Wall (Trapezoidal), Annular, or Oxidation Ditch
Grid	A single unit of aeration equipment consisting of a dropleg, diffusers, and manifold. Depending on the number of air distribution headers, the manifold may be omitted. Frequently, coarse bubble, stainless steel systems may not have a manifold. PVC systems almost always have a manifold.
Grid Length	For ditch geometry, the grid length dimension allows modifying the grid dimensions to accommodate mixers or other appurtenances in the ditch. If aeration design will design 1, 2, 3, or 4 ditches per basin. User must input number of parallel tanks as 1,2,3, or 4 and set grid length to an appropriate value. For example, a straight length of 100' and 4 grids means the grid length must be less than 50'.
Header	See Air Distribution Header.
Manifold	Horizontal pipe that is the terminating point of the dropleg. The manifold has connections to feed air to the air distribution headers.
Mixing Air	The air flow rate based on Mixing Criteria.

3/12/18

Mixing Criteria	Aeration systems serve two purposes: oxygenation and mixing of the suspended growth process. A certain amount of mixing energy is required to keep the solids mixed and suspended. In some processes, the air required for the oxygen transfer is not enough to keep the solids mixed. This situation is described as 'mixing limited'. In these cases, the air flow must be adjusted to the mixing criteria. By default, Sanitaire applies the WEF MOP/8 mixing criteria (Design of Municipal Wastewater Treatment Plants, Fourth Edition, WEF Manual of Practice 8, ASCE Manual and Report on Engineering Practice No. 76, pg. 11-83) of 0.12 scfm/ft² (2.19 m³/hr/m²). Spiral roll aeration systems generally require 15 - 25 scfm/kcf for mixing. Users may use any value for mixing criteria. Note Fine Bubble Mixing Criteria is air/area and Coarse Bubble Mixing Criteria is air/volume.
Oxidation Ditch	An oval shaped tank described as a rectangle with a half circle at either end. The rectangular area is bisected along its length by a dividing wall.
Oxygen Distribution	Number of taper zones or zones of unique diffuser count in the pass
Pass	A pass is a subdivision of a train. A single train (tank) with a serpentine flow path comprises a multiple pass system. A single tank with transverse baffle walls comprises a multiple pass system. Likewise, a single trains with several discrete basins is a multiple pass system.
Process Air	The air flow required for a given oxygen transfer rate.
SOR	Standard Oxygen Transfer Rate. Oxygen transfer rate defined at 20°C, 1 Atmosphere ambient pressure and clear water (alpha=1; beta=1).
Straight Length	For ditch geometry, straight length refers to the dimension from the end of one curve to the start of the second curve.
Surface Length	For Slope wall tanks, refers to the length measured at the elevation equal to the water depth of the basin.
Trains	A train is a treatment unit. Broadly, a train is a single treatment tank.
Trapezoidal Tank	A slope wall tank having rectangular footprint at both the floor and the water surface.

3/29/18

3/19/18

The selected mixer/mixers in this aeration system, must be manually positioned according to the Xylem Mixer Positioning Principles.

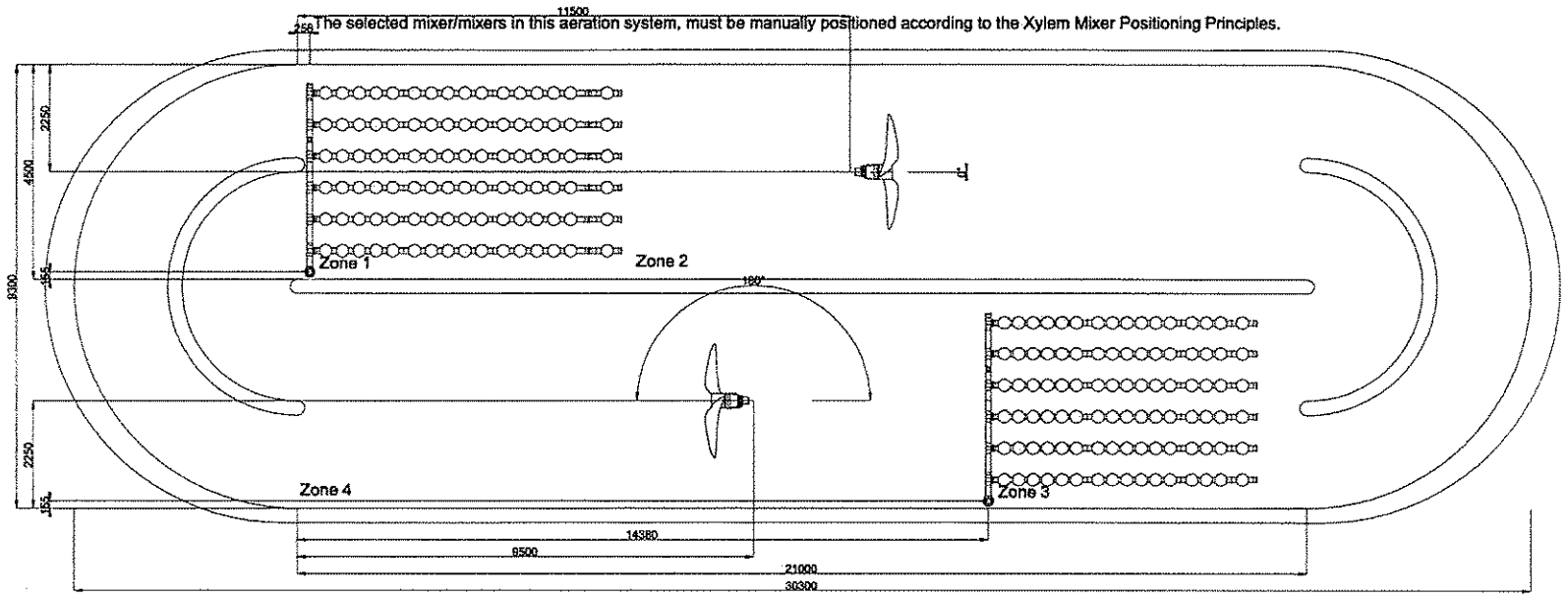

SECAD Aeration

Product	Diffuser			Header Pipe	SS Grade
A	9" SS# 2802, 5 mm orifice			110mm PVC	SS 304

Zone	Product	Diffusers	Total Diffuser Area [m²]	Nominal Header Spacing [mm]	Nominal Diffuser Spacing [mm]	Manifold	Zone Length
1	A	95	3.95	550	350	110mm	7.00 m
3	A	95	3.95	550	350	110mm	7.00 m

Mixers

Zone	Mixers	Mixer model	Propeller code	Propeller diameter [mm]	Min. Submergence [mm]	Min. distance propeller to bottom [mm]	Min. distance propeller to wall [mm]
2	1	4410	Not available	2.50	Not available	0.30	0.30
4	1	4410	Not available	2.50	Not available	0.30	0.30

SECAD™ S.I.A.1 (3.2) Standard

Disclaimer
The accuracy of the output is based on the accuracy of the input data, and it is the responsibility of those supplying that information to verify that the data is correct. The drawing is supplied for reference only, based on Flygt equipment, and is meant for preliminary sump design and system evaluation. A professional engineer, licensed in the appropriate field of engineering, should always conduct the final evaluation of the application. There are liabilities involved.

A1

Designed by	Drawn by	Date	Scale
Checked by	No. 9/6/17	Description: Conceptual drawing	Drawing
Approved by			Date
			Scale 1:50
		Drawing No. Aeration[2]	

xylem

This document may not without the permission, or copied, seen or handed out to competitors or any other unauthorized person.

FLYGT SANITAIRE

xylem
Let's Solve Water

Aeration products

FOR ENERGY-EFFICIENT BIOLOGICAL TREATMENT

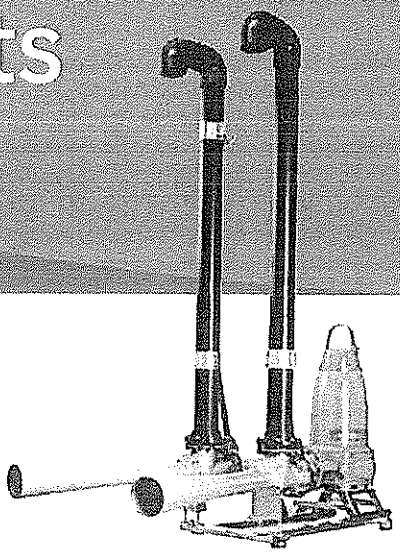

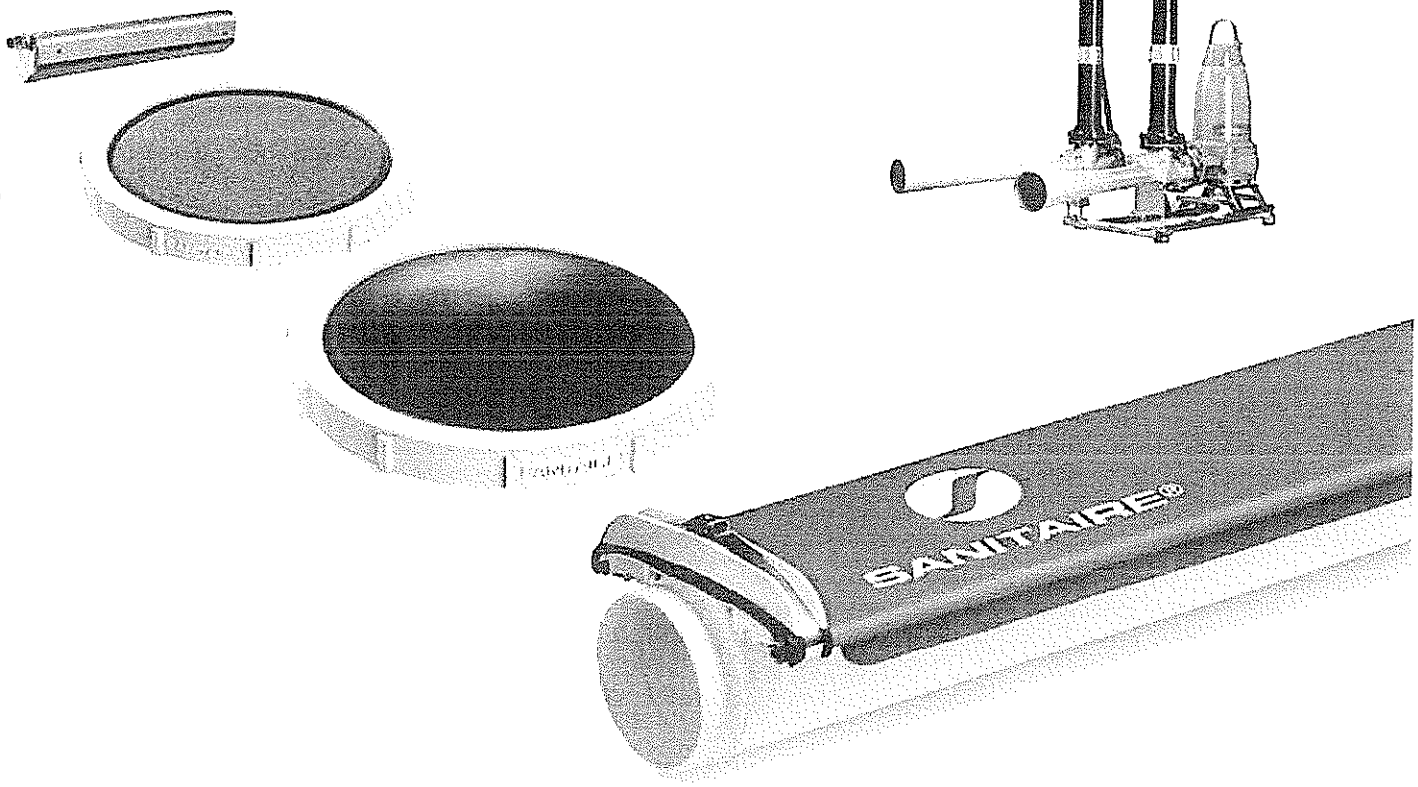

3/12/18

INTRODUCTION

Greater energy savings are in the air

Stricter environmental regulations and rising energy costs are forcing wastewater treatment plants to ensure wastewater discharge compliance and at the same time make operations more energy efficient. One of the main areas for environmental and cost savings lies just below the surface of your biological tanks.

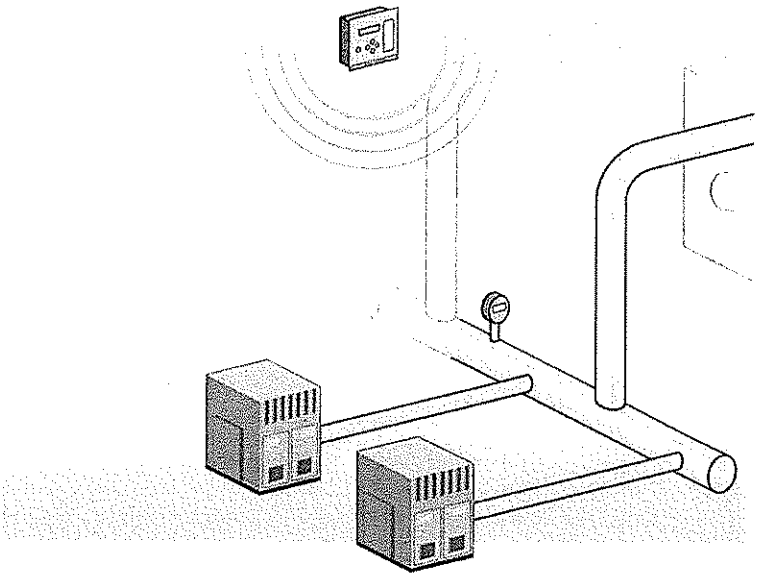

Uncover submerged energy savings
Aeration systems today represent an estimated 30 to 70 percent of the total energy costs at a typical wastewater treatment plant. By making your plant's biological treatment processes more efficient, you can realize big energy savings and lower your operating costs.

Reliable cost-effective aeration solutions
Proven reliable for more than 40 years, comprehensive aeration solutions from Sanitaire and Flygt meet virtually every need and operating condition. From fine-bubble diffusers complete with framework, piping, supports and energy-saving blowers to coarse-bubble diffusers and stand-alone mechanical aerators, our aeration systems reduce both your capital expenditures and operating and maintenance costs. Plus they are backed by precise monitoring and control systems.

Optimizing your aeration processes
Although we offer the best aeration equipment, equipment isn't everything. Competence is. Our engineers put more than four decades of expertise and a true passion for high oxygen transfer to work to ensure environmentally sound operations at your plant. So everything you need to know about improving your aeration processes is available through a single and reliable partner.

Contents

	Page
Diffused aeration	**4-11**
· Sanitaire Gold Series diffusers	5
· Sanitaire Silver Series II diffusers	6
· Sanitaire ceramic diffusers	7
· Sanitaire diffuser holders	8
· Sanitaire grid components	9
· Sanitaire coarse bubble wide-band diffusers	10
· Blowers	11
Mechanical aeration	**12-13**
· Flygt jet aerators	12
Monitoring and control	**14**
Support and service	**15**

3/12/18

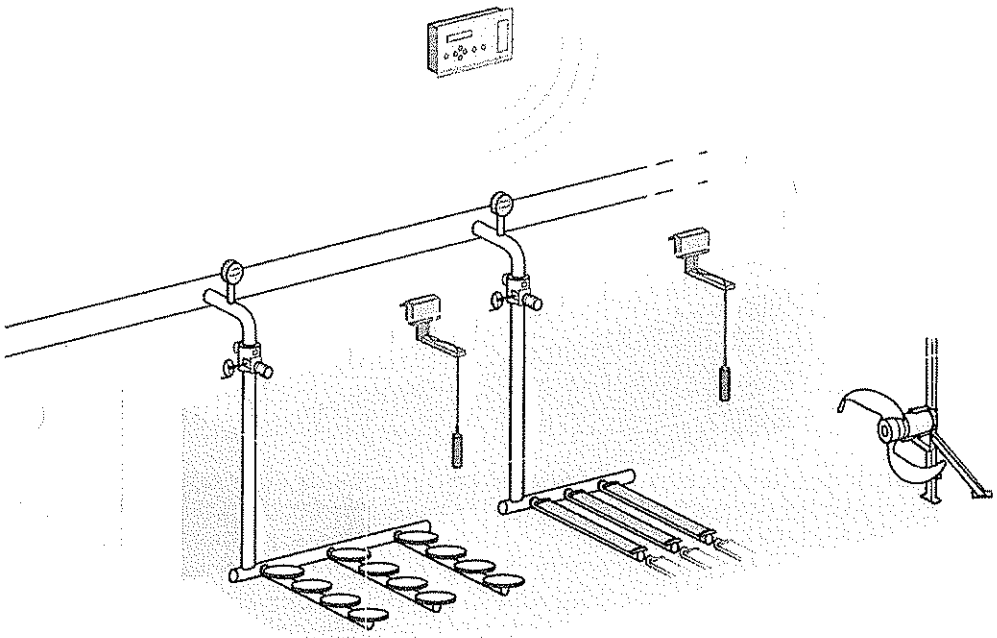

To optimize your process, we design, deliver, commission and, through control systems, support the operation and maintenance of your aeration system - from blowers to diffusers.

We understand how different operating strategies and equipment selection affect energy consumption and costs. So we can determine where additional operational efficiencies can be realized. Introducing an automated monitoring and control system or combining diffusers with mixers, for instance, can drastically boost efficiency and energy savings.

Whatever the challenge, be sure to take advantage of our vast aeration engineering expertise. This not only will improve aeration efficiency at your plant, but enable you to focus on increasing the profitability of your core business.

More oxygen delivered per kilowatt hour

Factors to consider when designing your aeration system:

Standard oxygen transfer efficiency (SOTE)

Used to compare oxygen transfer efficiency, SOTE is the ratio between the amount of oxygen transferred and the amount actually delivered. Per-formance can reach up to 60% depending on the water depth and airflow rate.

Standard aeration efficiency (SAE)

SAE is the ratio between the amount of oxygen transferred to the water and the amount of energy used. Typical values are 1-2 kg O_2/kWh for mechanical aeration systems and 2-8 kg O_2/kWh for diffused aeration systems.

SAE reflects both SOTE as well as blower efficiency and the system pressure loss.

Which aerator is right for you?

Treatment stages	Applications	Diffused aeration	Mechanical aeration
Preliminary and primary	Grit chamber	Coarse bubble	
	Retention basin	Coarse bubble/Fine bubble	Jet aerator
Secondary	Biological aeration	Fine bubble	Jet aerator
Tertiary	Aeration before discharge	Fine bubble	
Sludge	Aerobic digestion		Jet aerator
	Sludge holding	Coarse bubble/Fine bubble	Jet aerator
	Odor control	Fine bubble	Jet aerator

31.12.78

Dissolving into thin air

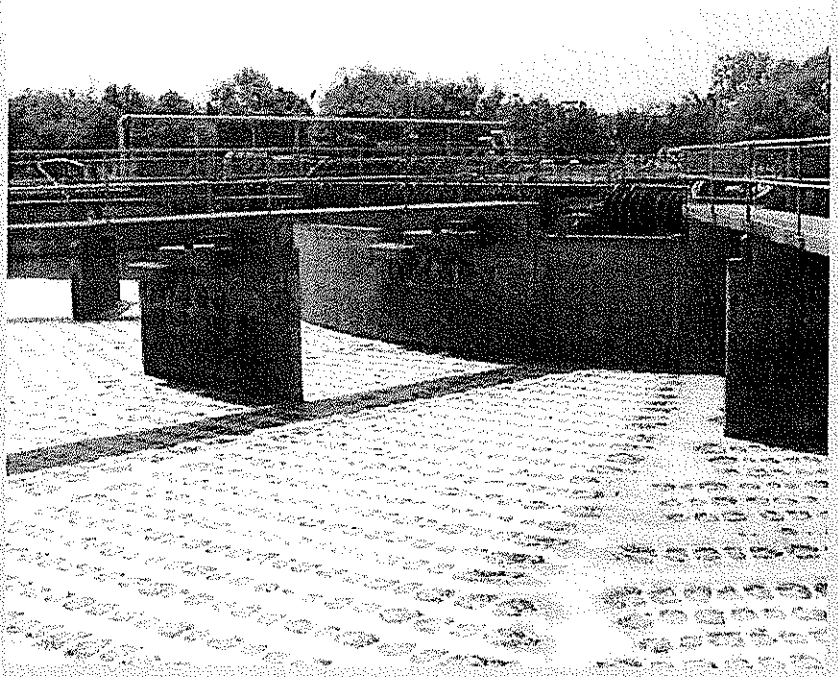

Grid components

To support Sanitaire fine bubble diffused aeration systems, we offer standardized grid components.

See page 9.

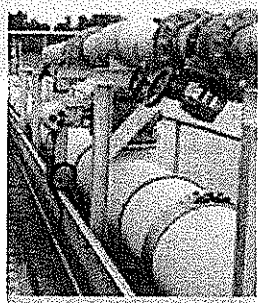

Air supply

No aeration system would be complete without an air supply and distribution system. Using in-house tools, we optimize designs for temperature and pressure considerations. We also complement Sanitaire aeration system with dependable blowers.

See page 11.

For reliable oxygen transfer in all types of wastewater aeration applications, choose Sanitaire® diffused aeration systems. No matter the tank geometry or process application, Sanitaire systems have proven effective in thousands of communities and industries worldwide.

Customize your system
Select the right components from the Sanitaire range and combine them with an air piping system, required support and an energy-efficient blower.

Fine-bubble diffusers
Sanitaire fine-bubble diffusers are generally employed for biological aeration, pre-discharge aeration and sludge holding odor control. Choose between Sanitaire Gold Series for high efficiency, Sanitaire Silver Series II membrane diffusers for standard and low-pressure aeration applications and the durable Sanitaire ceramic diffusers for applications that require corrosion resistance.

Coarse-bubble diffusers
For tougher applications such as sludge or industrial wastewater, Sanitaire coarse-bubble diffusers are the preferred technology. Typically used in grit chambers, retention tanks and sludge holding tanks, the Sanitaire wide-band diffuser doesn't disappoint.

Sanitaire Gold Series diffusers

Sanitaire Gold Series membrane diffusers are the latest innovation in fine-bubble aeration technology. Wherever high-density coverage and low flux rates are required, these can be tightly packed across any given basin floor area to provide unsurpassed aeration efficiency.

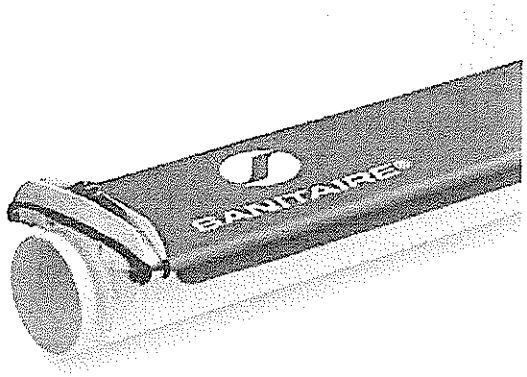

Energy efficiency
The unique diffuser geometry, and advanced micro-punched membrane enable high-density basin floor coverage and low air flux, which together provide high oxygen transfer using the lowest possible amount of energy. The membrane is engineered for low head loss thereby reducing energy consumption further.

High reliability
Thick, highly pliable polyurethane membranes outlast others in accelerated aging tests. Dependability is further enhanced by the watertight construction of the end fittings and sealing system, which withstand the stress of daily operation. It has even proven to be adapted to air-on/air-off applications.

Ease of installation
Compactness makes these complete, pre-assembled diffusers easy to install. This translates into faster commissioning, smarter use of resources and, ultimately, higher productivity.

Modularity
Modular design facilitates installation as well as low-cost, no-hassle retrofits because all Sanitaire components are interchangeable to enable optimization of aeration system performance.

Performance curves
Gold Series

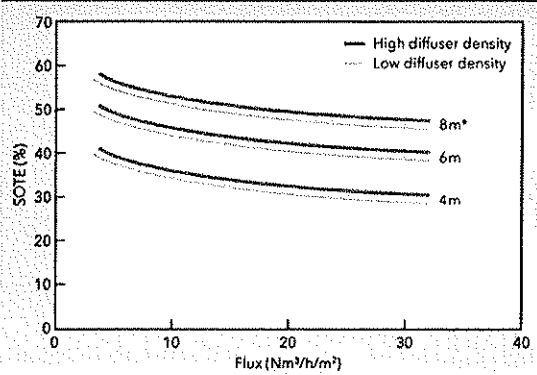

*Submergence

Technical data

Membrane material	Polyurethane
Lengths	2,286 mm (90 in) 1,500 mm (59 in) 700 mm (28 in)
Airflux range	3.7–37 Nm³/h /m² 0.2–2 scfm /ft²
Standard oxygen transfer efficiency (SOTE)	7–10% per m submergence 2.2–3% per ft
Standard aeration efficiency (SAE)	3–8 kg O_2 /kWh 8–15 lbs O_2 /hph

31/12/18

Sanitaire Silver Series II diffusers

For a combination of high aeration efficiency and low operating costs, there's the Sanitaire Silver Series II membrane diffuser - the most widely used fine bubble diffused aeration system available today.

High oxygen transfer efficiency
The Sanitaire Silver Series II membrane features a unique slit pattern and slit shapes, which disperse air bubbles in an extremely fine, uniform pattern for optimal oxygen transfer.

Long service life, low maintenance
The high elasticity and degradation-resistance of specially blended high-grade EPDM elastomer compounds contribute to a service life of 10 or more years.

Operating efficiency
The unique membrane shape, integrated O-ring and top-sealing threaded retainer ring eliminates leakage. This reduces energy consumption and raises operating efficiencies.

Great application flexibility
A highly effective, integrated check valve enables the aeration zones to easily be shut down for air-on/air-off applications.

Sanitaire Silver Series II LP
This 9" low-pressure version of the Sanitaire Silver Series II membrane features a modified slit pattern to handle airflow up to 17Nm³/h (11 scfm) with minimal pressure loss. It is an excellent choice for sludge and other heavy-duty applications.

Performance curves
Silver Series II

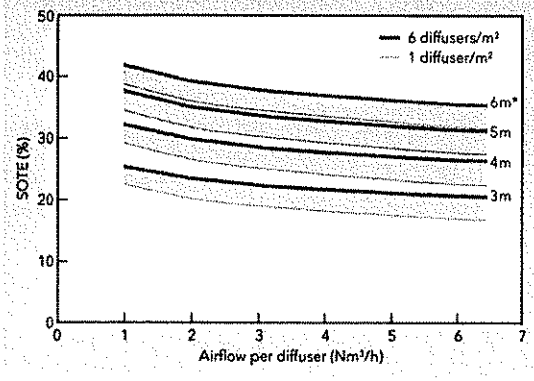

*Submergence

Technical data

Disc material	Specially blended high-grade EPDM
Diameter	178 or 229 mm (7 or 9 in)
Airflow range per disc	0.8-7 Nm³/h (0.5-4.5 scfm)
Standard oxygen transfer efficiency (SOTE)	Approx. 6.5% per m submergence (2% per ft)
Standard aeration efficiency (SAE)	2.5-6 kg O_2 /kWh (4-10 lb O_2 /hph)

3172178

Sanitaire ceramic diffusers

Sanitaire ceramic diffusers handle aeration of aggressive, highly corrosive wastewater, delivering high oxygen transfer both efficiently and cost effectively.

Low total cost of ownership
Sanitaire ceramic discs are specially compression-molded to achieve optimal contours for high oxygen transfer efficiency at low operating pressures. Variable areas of density across the disc surface promote uniform airflow distribution. This contributes to low system head loss, low energy consumption, low operating costs and, thereby, a low total cost of ownership.

Energy efficiency
Sanitaire ceramic discs feature a top-sealing threaded retainer ring, which ensures an airtight seal. As air pressure increases, the sealing force on the O-ring increases thus creating an airtight seal. Because there are no air leaks, no energy is wasted.

20-year-long life expectancy
Durable, reliable and clog-resistant, Sanitaire ceramic discs are low-maintenance diffuser elements that typically last 20 or more years. To prolong service life further, an optional in-place gas cleaning system enhances continuous performance.

Performance curves
9" ceramic

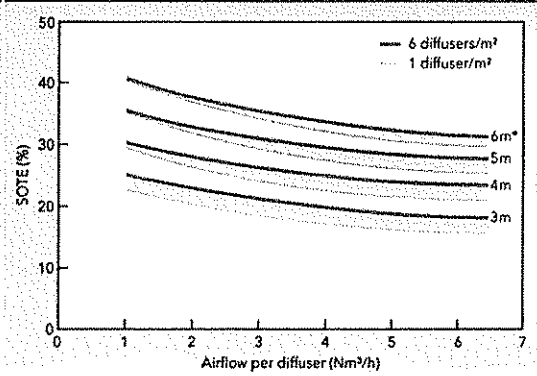

*Submergence

Technical data

Disc material	Special compression-molded ceramic
Diameter	178 or 229 mm (7 or 9 in)
Airflow range per disc	0.5-4.7 Nm³/h (0.3-3 scfm)
Standard oxygen transfer efficiency (SOTE)	Approx. 6.5% per m submergence (2% per ft)
Standard aeration efficiency (SAE)	2.5-6 kg O_2 /kWh (4-10 lb O_2 /hph)

3/12/18

Sanitaire diffuser holders

These easy-to-install Sanitaire diffuser holders provide superior mechanical strength to support Sanitaire Gold Series and Silver Series II membranes and Sanitaire ceramic discs.

Sanitaire 2300 holder
Designed for use with Sanitaire Silver Series II membranes, Sanitaire Silver Series II LP membranes and Sanitaire ceramic discs.

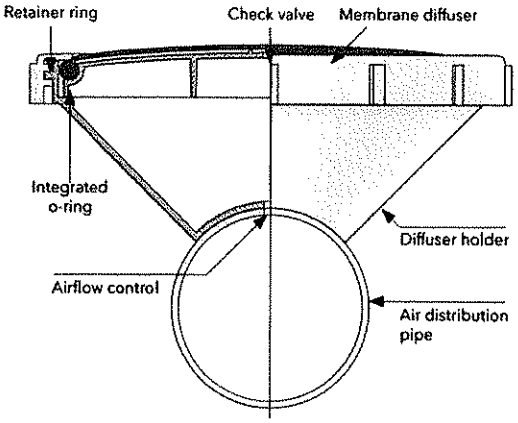

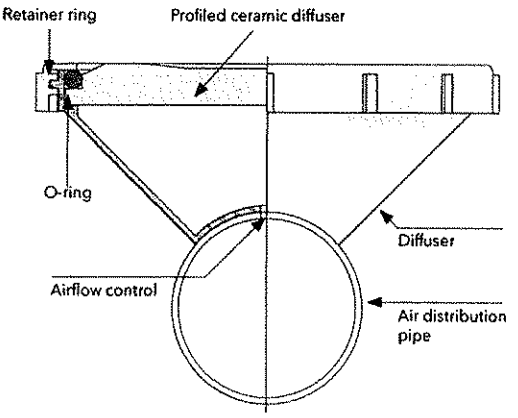

Sanitaire 2802 holder
A cost-effective alternative, the Sanitaire 2802 is designed for use with the Sanitaire Silver Series II and Silver Series II LP membranes.

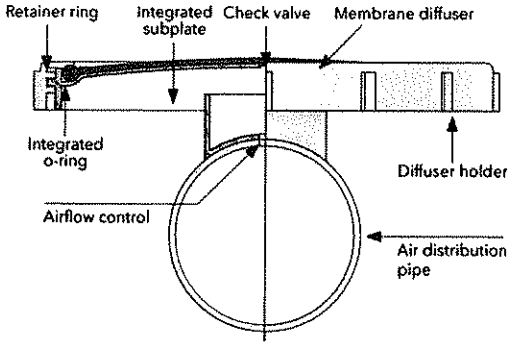

Sanitaire Gold Series holder
Designed for use with Sanitaire polyurethane membranes and based on the highly efficient cross-section of the 7" holder.

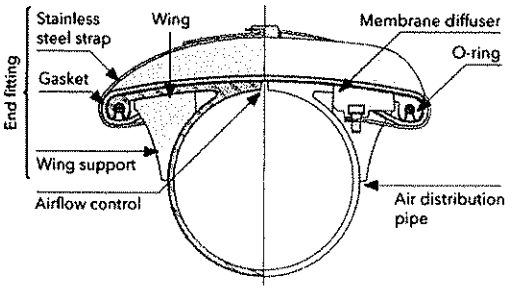

3/12/18

Sanitaire grid components

Beneath every Sanitaire diffused aeration system is a solid foundation. These components are integral to the Sanitaire fine bubble range and hold important supporting roles.

Solid framework
Patented Sanitaire spline joints ensure firm connection of air supply pipes from the dropleg to the diffusers. Engineered to withstand thermal expansion and contraction, water hammer and other dynamic stress, these spline joints securely fasten the pipes, thereby preventing air leakage, pipe blowapart and pipe rollover.

Upstanding system support
Made of durable corrosion-resistant stainless steel, Sanitaire guide supports securely anchor Sanitaire diffused aeration systems. These robust threaded supports feature an infinite height adjustment mechanism to ensure accurate grid leveling. The pipe bracing assembly accommodates pipe expansion while providing a stable foundation. Specially reinforced Sanitaire guide supports are available for high velocity and mixer zones.

Easy to adapt
Sanitaire air distribution pipes are delivered with factory-welded diffuser holders and Sanitaire Gold Series are delivered as pre-assembled units, to facilitate installation. Moreover, Sanitaire grid components are fully interchangeable with your existing system. To meet more stringent emissions requirements, for example, it's easy to replace Sanitaire ceramic discs with Sanitaire Gold Series or Silver Series II membranes.

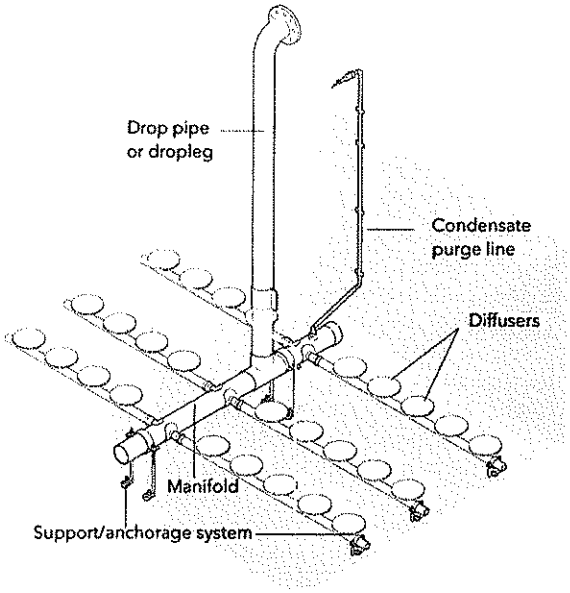

Aeration purging
After condensation, water levels in the manifold can rise and extend to the headers. To deal with water buildup, we offer a separate purge system that removes condensate from the lowest point in the system.

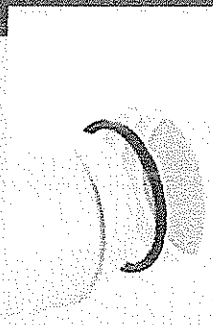
Spline joints

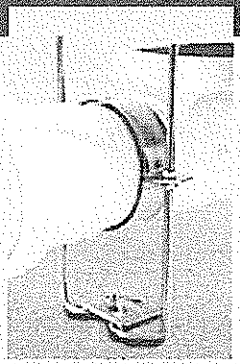
Adjustable grid support

Technical data

Dropleg	Stainless steel AISI 304 or 316
Manifolds	Stainless steel, specially formulated polyvinyl chloride (PVC) to prevent UV degradation.
Distribution headers	PVC or CPVC for higher temperatures
Supports and anchor bolts	Stainless steel AISI 304 or 316
Gaskets	EPDM

3/12/18

Sanitaire coarse bubble wide-band diffuser

The Sanitaire stainless steel wide-band diffuser is an excellent choice and a smart alternative to mechanical aeration. It is especially suited to tough sludge-related applications such as aerobic sludge digestion, grit chambers, flow equalization and channel aeration.

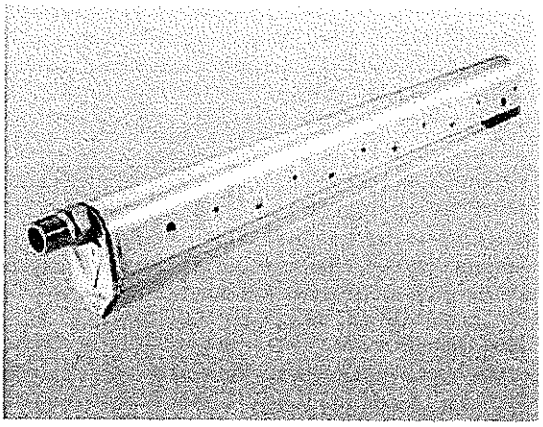

Clog-resistant, maintenance-free design
The Sanitaire wide-band diffuser features an innovative inverted air reservoir. This stores a sufficient air volume at the centre of the diffuser for use to ensure continuous and uniform airflow. This prevents clogging. Another smart feature is a bottom deflector, which prevents the entry of debris into the diffuser and reduces the need for maintenance.

Erosion/corrosion resistance
Thanks to immersion passivation after fabrication, the Sanitaire wide-band diffuser is erosion/corrosion-resistant and maintains full structural integrity even in welded heat-affected zones. This prolongs service life.

Solid oxygen transfer efficiency
Dual horizontal levels of diffusion ports on the diffuser side ensure uniform air distribution and aeration efficiency.

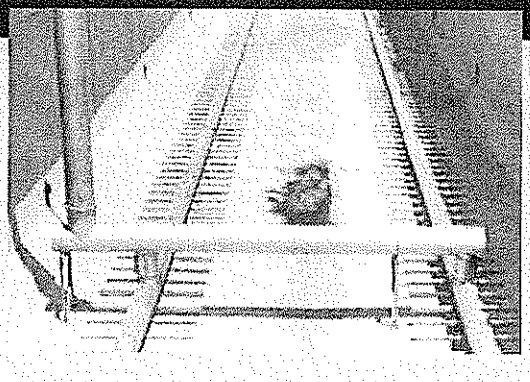

Technical data	
Material	Stainless steel AISI 304 or 316
Length	305 or 610 mm (12 or 24 in)
Airflow range per band	15-63 Nm^3/h (10-40 scfm)
Standard oxygen transfer efficiency (SOTE)	1.6-2.5% per m submergence (0.5-0.8% per ft)
Standard aeration efficiency (SAE)	0.7-2 kg O_2 /kWh (1.1-3.5 lbs O_2 /hph)

3/12/18

Blowers

Optimizing your aeration systems is of paramount importance. Which is why we can complement every Sanitaire diffused aeration system with a fully packaged blower system that is reliable, energy-efficient and easy to maintain.

It takes experience and expertise to select the right blower for your aeration system. We have both. We understand the parameters that influence blower selection - from energy efficiency and reliability to life cycle cost, operational flexibility and installation footprint through to noise levels and maintenance requirements.

Whatever your aeration needs, we help you select the right blower from among these technologies, which are typically found in a wastewater treatment plant.

Rotary lobe blowers
A pair of spinning rotors delivers a fixed volume of air for each rotation. Rotary lobe blowers rely upon external compression whereby the air is compressed by the system backpressure. While these offer the advantage of low capital investment costs upfront, they also provide low efficiency.

Screw rotor blowers
A pair of intermeshing screws progressively reduces the volume of air as it moves along the length of the screw element. These provide higher efficiency than other positive displacement blowers due to the use of internal compression.

Multi-stage centrifugal blowers
Multiple impellers are mounted on a single low-speed shaft normally operating at a fixed speed. These are employed for larger flows and require less capital investment than other types of centrifugal blowers, however are also generally less efficient.

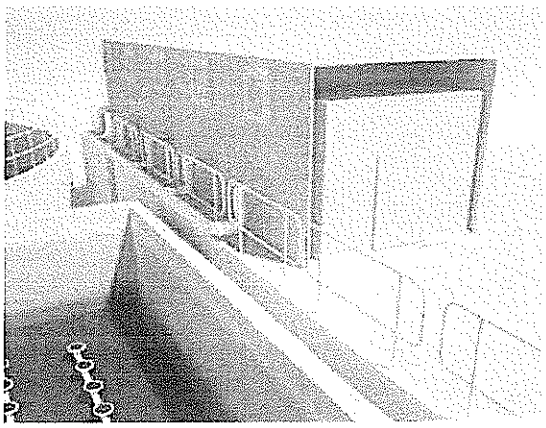

Single-stage, integrally geared centrifugal blowers
A single impeller achieves higher rotational speed via a step-up gear. These can be equipped with variable inlet guide vanes and diffuser vanes to achieve high efficiency over a range of operating flows. Single-stage, integrally geared blowers are more efficient than positive displacement and multi-stage centrifugal blowers.

Variable-speed, single-stage direct-drive centrifugal blowers
A single or dual impeller is mounted directly on to the shaft of a high-speed motor with low-friction magnetic or air foil bearings. These have integrated VFD (variable frequency drive) to match pressure and flow rate demands. While more expensive than positive displacement and multistage centrifugal blowers, these are more efficient, with magnetic bearing blowers often being more efficient than those with air foil bearings.

3/12/18

Flygt jet aerators

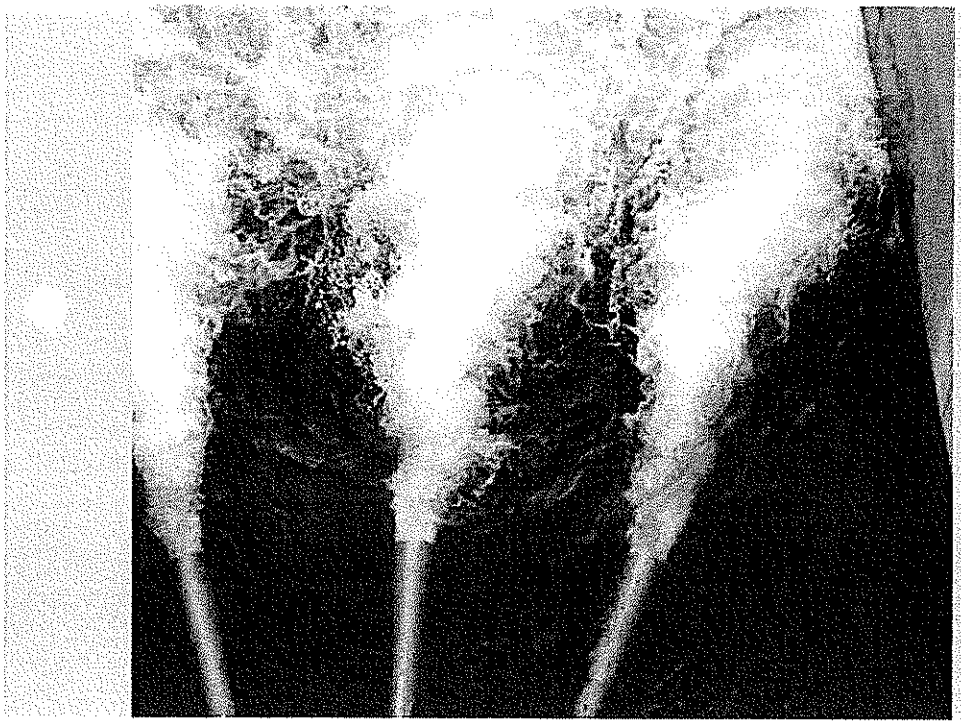

Mechanical aeration systems from Flygt provide an affordable alternative to our highly efficient diffused aeration systems. Convenient lift-in, lift-out solutions, submersible Flygt jet aerators provide reliable, low-cost oxygen transfer for small to medium-sized sludge tanks, retention tanks and bio-reactors.

Quick, low-cost installation
Convenience doesn't come easier than with Flygt jet aerators. Simply lift and position these stand-alone aeration systems into any small to medium-sized tank without having to empty it, using the Flygt pump lift and chains. Installation is complete. Then plug in Flygt jet aerators and let them work. No blowers, special housing or superstructures are required.

Proven long-term reliability
Flygt jet aerators provide maximum uptime and minimal maintenance. Proven N-technology, a specially engineered Flygt ejector assembly and air suction pipe bend combine to provide high operational reliability.

Better working environment
Because the submersible Flygt jet aerator rests on the tank bottom, there's significantly less spray and lower noise levels and vibrations. This greatly improves the working environment.

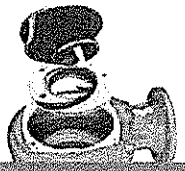

Proven N-technology

Flygt jet aerators feature Flygt N-pumps with N-technology, renowned for its non-clogging design and high efficiency.

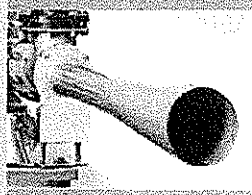

Ejector assembly

The robust, non-clogging ejector assembly creates high turbulence where wastewater combines with air to form a liquid jet containing fine air bubbles.

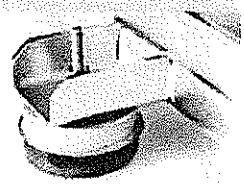

Pump lift feet

Robust stand with damper feet prevents vibration, which could damage the ejector system.

3172/18

Operational flexibility
Compact Flygt jet aerators fit into any tank regardless of size or shape. Choose the Flygt pump capacity, number of mechanical ejectors and materials that match your requirements. Pumps can serve between one and three ejectors.

Erosion/corrosion-resistant operation
Greater durability can be achieved by choosing the stainless steel ejector assembly and Hard-Iron™ N-impeller over the standard galvanized steel ejector assembly and cast iron N-impeller.

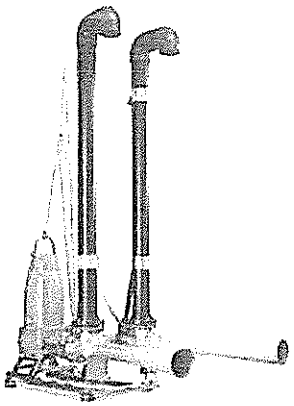

The Flygt jet aerator consists of air suction pipes, an N-pump, ejector housings and ejectors.

Performance curves

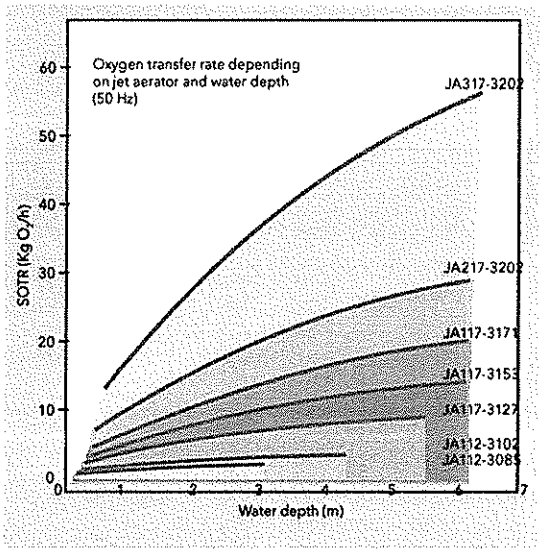

Working principle;
The velocity of the water creates air suction which is mixed in the ejector and transferred into the wastewater tank.

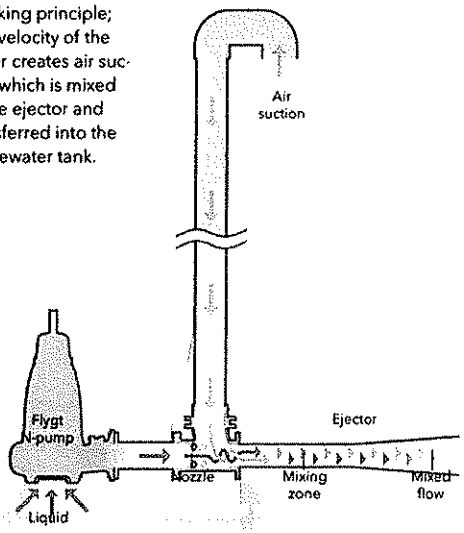

Technical data

Model	JA112	JA212	JA117	JA217	JA317	JA317	JA317
SOTR at 4m (13 ft) depth							
50Hz, kgO_2/h	1.5*	3.2	7.5	11	15	22	40
60Hz, kgO_2/h ($lbsO_2/h$)	2.2 (4.8)	3.3 (7.3)	7.8 (17)	12 (26)	17 (37)	30 (66)	43 (95)
Ejectors	1	1	1	1	1	2	3
Nozzle outlet diameter (mm)	55	55	95	95	95	95	95
Flygt N-pump	3085 MT	3102 MT	3127 MT	3153 MT	3171 MT	3202 MT	3202 LT
Rated power, kW (hp)							
50 Hz	2	3.1	5.9	9	15	22	37
60 Hz	2.2 (3)	3.7 (5)	7.5 (10)	11.2 (15)	18.6 (25)	34 (45)	45 (60)
Cooling jacket	–	–	–	•	•	•	•
Standard aeration efficiency (SAE)	‹---------- 0.5-1.2 kgO_2/kWh (0.8-2 $lbsO_2$ /hph) ----------›						

* *At 3m (10 ft) depth.*

3/12/98

Empowering system performance

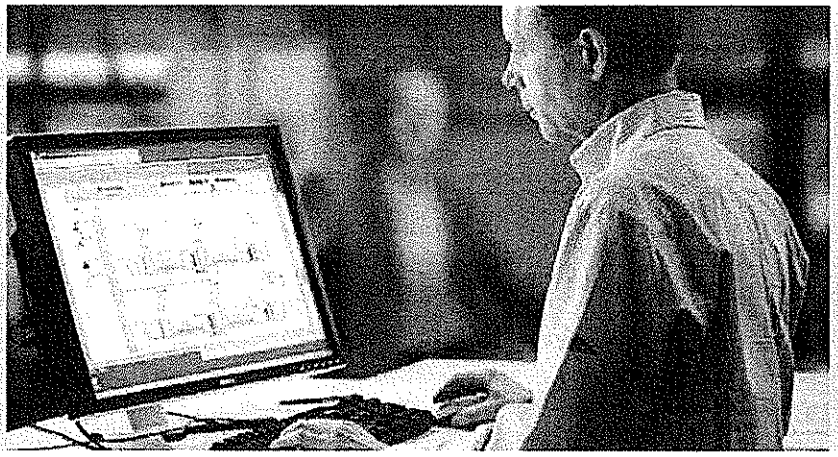

Take command of the performance of your aeration systems with our monitoring and control systems. To help you meet your responsibilities in a constantly changing environment, you can rely on us to put you in total control of your entire plant or plant subsystem/s.

Saving energy on a daily basis
The Flygt APX process controller automatically adapts the air supply to your oxygen requirements based on daily and seasonal variations. This drastically reduces power consumption and boosts energy savings by up to 40%. The information in our systems flows seamlessly to most existing third-party control system. So after installation, you can immediately begin saving more energy.

Total control, total performance
For full end-to-end control of your entire plant, combine the Flygt APX process controller with the Flygt AquaView SCADA system. Both are based on open standards, no special interfaces are required to communicate with most programmable logic controllers (PLCs) or SCADA systems. This makes continuous real-time monitoring of individual components possible. It also provides detailed data on events to identify trends and diagnose problems before they even occur. With total control, you can boost energy efficiency every step of the way and raise performance at your plant.

Total peace of mind
We understand that system reliability is of paramount importance. With us as your single reliable partner, you not only can improve control over your operations, but improve productivity and profitability. Managing your plant from any remote location is easy, thanks to web-based tools and online support. What's more, our control systems are flexible, scalable and future-proof and can accommodate additional equipment in virtually any treatment plant configuration.

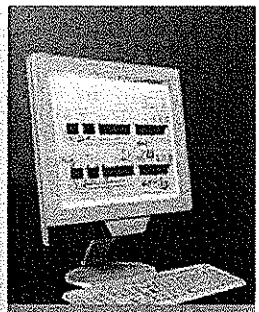

Flygt AquaView SCADA system

- Provides a complete plant overview
- Collects and stores data to identify trends and diagnose problems before they occur
- Provides extensive alarm handling

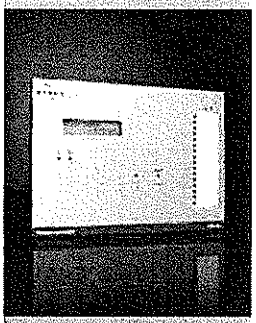

Flygt APX process controller

- Distributes the required oxygen to tanks and grids
- Operates blowers at optimal efficiency
- Provides extensive alarm handling

3/12/18

Aeration expertise runs deep

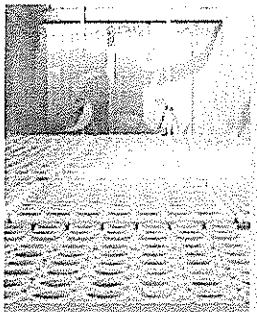

Combining aeration & mixing technologies

To deliver high oxygen transfer and mixing efficiencies with minimal energy consumption, you can rely on our engineers to share their knowledge about system design.

- System simulation utilizing CFD
- Engineering software development
- Advisory services
- System design assistance
- System specification assistance
- Oxygen transfer testing
- Model testing

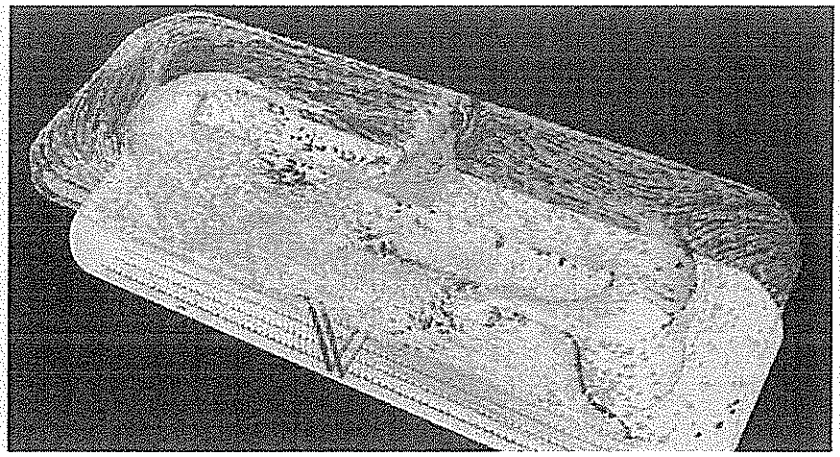

We are passionate about the design and execution of comprehensive aeration treatment solutions. We have knowledge and understanding of the aeration process to safeguard the wellbeing of your business and the environment.

Extensive systems engineering
Our competence in systems engineering runs deep. We can assist you every step of the way - from developing mixing and aeration specifications to shop testing. Through thorough aeration design analysis, we are able to achieve the highest possible oxygen transfer while using the least possible amount of energy.

Smart tools to analyze aeration design
Our engineers combine their experience and expertise with specially developed software programs and tools so that we can design new and existing aeration installations tailored to your requirements.

Computational fluid dynamics (CFD) programs enable our engineers to simulate your aeration operating conditions, determine how best to optimize flow turbulence in your tanks and minimize energy consumption.

We use system temperature and pressure calculations to determine the optimal conditional for every single component in your entire aeration system - from blower to grid.

Grid configuration is another area where we excel. We tailor your grid to meet your requirements for oxygen transfer.

Support all along the way
Customers worldwide have come to rely on us for comprehensive range of aeration system components and accessories, spare parts and support. Whatever your requirements, we support you all the way - from designing and commissioning to optimizing and maintaining your aeration systems.

3/12/18

Xylem |'zīləm|

1) The tissue in plants that brings water upward from the roots,
2) a leading global water technology company.

We're 12,000 people unified in a common purpose: creating innovative solutions to meet our world's water needs. Developing new technologies that will improve the way water is used, conserved, and re-used in the future is central to our work. We move, treat, analyze, and return water to the environment, and we help people use water efficiently, in their homes, buildings, factories and farms. In more than 150 countries, we have strong, long-standing relationships with customers who know us for our powerful combination of leading product brands and applications expertise, backed by a legacy of innovation.

For more information on how Xylem can help you, go to **www.xyleminc.com**

FLYGT

SB004-460 • Sanitaire Aeration Products Brochure • 04/2012 • US

xylem
Let's Solve Water

Xylem, Inc.
14125 South Bridge Circle
Charlotte, NC 28273
Tel 704.409.9700
Fax 704.295.9080
www.xyleminc.com

Flygt is a trademark of Xylem Inc. or one of its subsidiaries.
©2012 Xylem, Inc. FEB 2012

3/12/18

sc1000 MULTI-PARAMETER UNIVERSAL CONTROLLER

Applications
- Drinking Water
- Wastewater
- Power
- Industrial Water

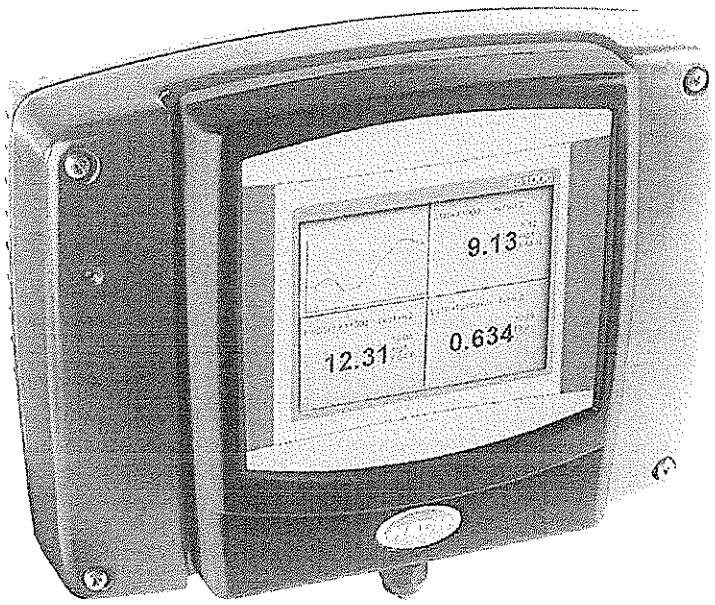

PROGNOSYS™ READY

A fully modular system consisting of a display module and one or more probe modules.

More Confidence in Your Instrument's Performance

Available exclusively on the sc1000, PROGNOSYS predictive diagnostics uses patented multivariable diagnostic software to read multiple inputs from your instrument and alert you to the instrument's overall performance. An easy to read dashboard provides instant indication of measurement reliability and service requirements.

Plug and Play Operation

There's no complicated wiring or set up procedures with the sc1000 controller. Plug any Hach digital sensor into a Probe Module and it's ready for use. No special ordering or software configuration is needed.

Communication Options to Fit Any Application Need

The sc1000 controller features state-of-the-art Modbus TCP/IP communications protocol for seamless integration into a network of devices that support TCP/IP sockets. Use a standard Ethernet cable or connect wirelessly using GSM/GPRS to communicate with your SCADA PLC, or other network. The sc1000 also offers up to 12 analog outputs for measured values and up to 12 analog or digital values from non-digital sensors.

Expandable and Upgradable

The sc1000 Controller can adapt to your needs. Add or change probes without having to change the controller. Plus, with a single Display Module, additional Probe Modules and associated sensors can be added or removed depending on operational needs. Fully upgradable software ensures that this system will not be obsolete. Hach service plans are available.

Expandable and Upgradable

The Hach sc1000 Controller can adapt to your needs. Change probes without changing the controller. With a single Display Module, additional Probe Modules can be added or removed depending on operational needs. Fully upgradable software ensures that this system will not be obsolete. Hach service plans are available.

HACH®
Be Right™

3/12/98

Specifications*

Operating Temperature Range	-20 to 55 °C (-4 to 131 °F), 0 to 95% relative humidity, non-condensing
Storage Conditions	-20 to 70 °C (-4 to 158 °F), 0 to 95% relative humidity, non-condensing
Power Requirements (Voltage)	100 - 240 V AC, 24 V DC
Power Requirements (Hz)	50/60 Hz
Display	1/4 inch VGA graphical backlit TFT color Glas/Glas-Touch screen, high resistance, 320 x 240 pixels
Display Viewing Area	11.4 x 8.6 cm (4.5 x 3.4 in)
Alarm	Low alarm point, low alarm point deadband, high alarm point, high alarm point deadband, off delay, and on delay
Relays	Up to four SPDT, user-configurable contacts rated 100 to 230 VAC, 5 Amp resistive maximum per probe module. Additional relays are available with additional probe modules.
Inputs	Up to 12 analog 0-20 mA, maximum impedance 500 Ohms per probe module. Additional analog inputs are available with additional probe modules.
Outputs	Up to 12 analog 0/4-20 mA, maximum impedance 500 Ohms per probe module. Additional analog outputs with additional probe modules. Optional digital communcations via Modbus® (RS485) and Profibus® DP/V1.
Analogue Output Functional Mode	PID, high/low phasing, setpoint, deadband, overfeed timer, off delay, on delay
Communication	Modbus® (RS485): Advanced communications/networking with PLC or SCADA system directly from analyzer Profibus® DP/V1 (certified) GSM/GPRS Quad-band cellular module (FCC and IC approved, EU and US only) Ethernet service port, RJ45, 10 MB/s
Mounting Configurations	Surface, panel, and pipe (horizontal and vertical) with optional sun shield
Enclosure Rating	IP65
Material Enclosures	ABS (display module) and metal (probe module) enclosure with corrosion resistant finish
Dimensions Metric (H x W X D)	150 mm x 315 mm x 250 mm
Certifications	North American Certifications: cTUVus to UL 61010A-1 and CSA C22.2 No. 1010.1 FCC ID QIPMC56 / IC ID 267W-MC56 European Certifications: CE per 73/23/EEC and 89/336/EEC TUV-GS to EN 61010-1 EN 61326 Amd's 1 & 2
Weight	Approximately 14.33 lbs. (6.5 kg) depending on configuration
Warranty	1 year

Subject to change without notice.

3172178

Dimensions

The sc1000 controller unit can be installed on a pole, wall, or a floor stand.
No tools are needed to connect the controller unit to any Hach digital sensor.

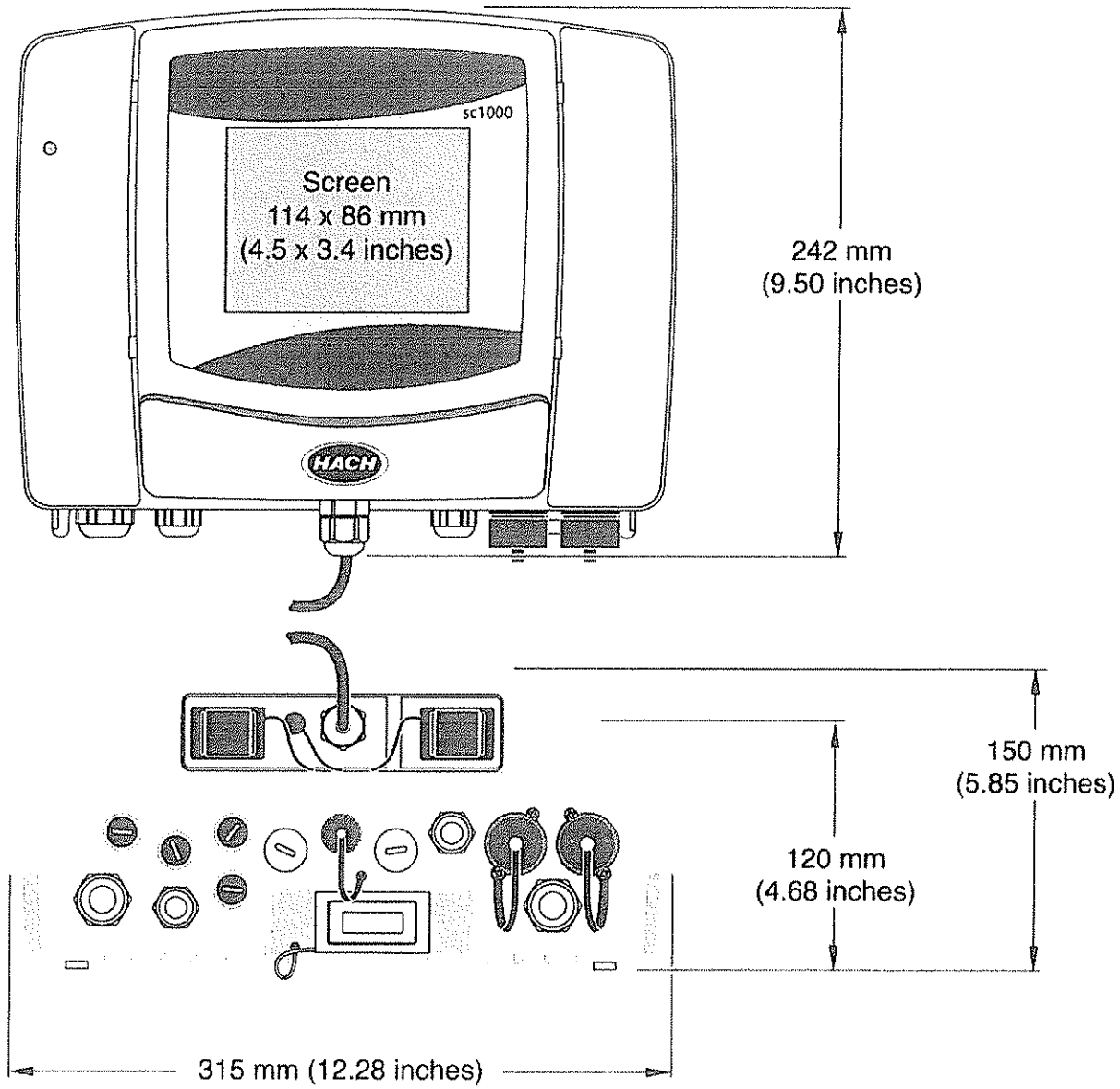

3/12/18

Ordering Information

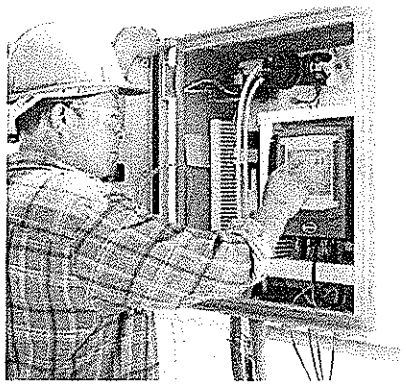

sc1000 Display Modules

LXV402.99.00002	sc1000 Display Module
LXV402.99.01002	sc1000 Display Module with GSM/GPRS Protocol
LXV402.99.10002	sc1000 Display Module with Modbus® TCP/IP Protocol
LXV402.99.12002	sc1000 Display Module with Modbus® TCP/IP and GSM/GPRS Protocols

sc1000 Probe Modules

LXV400.99.1R572	sc1000 Probe Module, 4 sensors, 4 mA Out, 4 mA In, 4 Relays, 110-230V
LXV400.99.1B572	sc1000 Probe Module, 4 sensors, 4 mA Out, 4 mA In, 4 Relays, Modbus® RS485, 110-230V
LXV400.99.1F572	sc1000 Probe Module, 4 sensors, 4 mA Out, 4 mA In, 4 Relays, Profibus® DP, 110-230V
LXV400.99.1R582	sc1000 Probe Module, 6 sensors, 4 mA Out, 4 mA In, 4 Relays, 110-230V
LXV400.99.1H082	sc1000 Probe Module, 6 sensors, Prognosys Software, Modbus® RS485, 110-230V
LXV400.99.1G082	sc1000 Probe Module, 6 Sensors, Prognosys Software, 110-230V

Note: Additional Probe Module configurations are available. Please contact Hach Technical Support or your Hach representative.

Network and Communication Cards

YAB021	sc1000 Internal Modbus® RS485 Card
YAB020	sc1000 Internal Profibus® Card
YAB076	sc1000 Internal Relay Card
YAB018	sc1000 Internal 0/4-20 mA Analog/Digital Inputs Card
YAB019	sc1000 Internal 0/4-20 mA Analog/Digital Outputs Card

Accessories

6169900	sc1000 Panel Mount Kit
LZX958	sc1000 Sun Shield
LZY598	Modbus® TCP/IP License Kit for Field Upgrade (Display Module serial number required when ordering)
LZY488	sc1000 Bus Cable for Flexible Installations (Order per foot)
LZY489	sc1000 Bus Cable for Fixed Installations (Order per foot)
5448800	North American Power Cord Kit with Strain Relief, 125V
5448900	European Power Cord Kit with Strain Relief, 230V

HACH COMPANY World Headquarters: Loveland, Colorado USA

United States: 800 227 4224 tel 970 669 2932 fax orders@hach.com
Outside United States 970 669 3050 tel 970 461 3939 fax int@hach.com
hach.com

LIT2403 Rev 3
F14 Printed in U.S.A.
©Hach Company, 2014. All rights reserved.
In the interest of improving and updating its equipment, Hach Company reserves the right to alter specifications to equipment at any time.

HACH® Be Right™

3/19/18
e

DISSOLVED OXYGEN: HACH LDO® PROBE, MODEL 2

Applications

- Wastewater
- Industrial Water
- Drinking Water

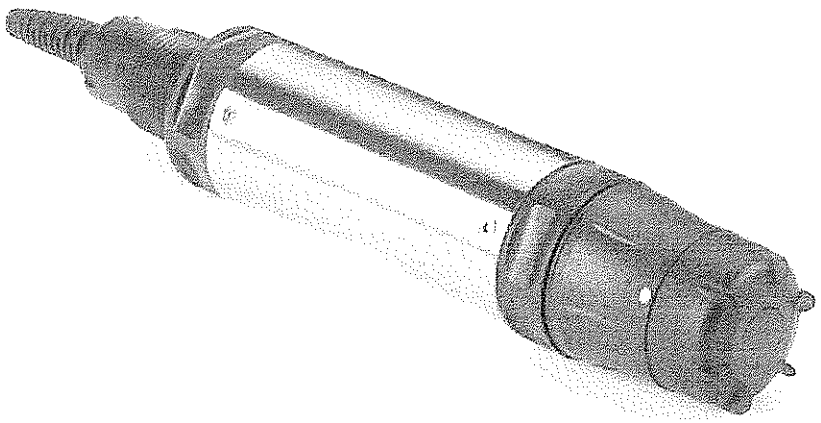

Take "No" for an answer when measuring dissolved oxygen with the next generation Hach LDO probe.

No Calibration Required

The Hach LDO probe is ready to work in your process right out of the box with no calibration required for the entire 2-year life of the sensor cap.

No Membranes to Replace

There is virtually no maintenance with Hach's breakthrough luminescent technology. There are no membranes to replace, no electrolyte solution to replenish, and no anode or cathode to clean.

No Missed Cleaning Cycles

Customizable service indicators trigger a service message so that a cleaning cycle is never missed.

No Drift

A cutting-edge, 3D calibration procedure at the factory makes oxygen measurement with the Hach LDO probe more accurate than ever before.

No Complications

A robust new design gives the Hach LDO enhanced durability and reduced size for easier handling.

HACH®
Be Right™

3/12/18

Specifications*

Range	0 to 20.00 ppm 0 to 20.0 mg/L (or ppm) 0 to 200 % air saturation
Accuracy	± 0.05 ppm below 1 ppm ± 0.1 ppm below 5 ppm ± 0.2 ppm above 5 ppm
Response Time	T_{95} < 60 s T_{90} < 40 s
Resolution	0.01 ppm DO 0.1% saturation
Repeatability	± 0.1 (mg/L) ppm
Flow Rate	None required
Sensor Immersion Depth	Down to 345 kPa 345 kPa (50 psi), maximum; accuracy may not be maintained at this depth
Transmission Distance	1000 m (3280 ft.) maximum when used with a termination box
Cable Length	10 m (options with 30m, 60m, 100m)
Dimensions (D x L)	1.9 in x 10 in (48.25 mm x 254 mm)
Weight	2.2 lbs. (1 kg), probe only

Subject to change without notice.

Principle of Operation

The HACH LDO sensor is coated with a luminescent material. Blue light from an LED is transmitted to the sensor surface. The blue light excites the luminescent material. As the material relaxes it emits red light. The time it takes for the red light to be emitted is measured. Between the flashes of blue light, a red LED is flashed on the sensor and used as an internal reference.

Increased oxygen in the sample decreases the time it takes for the red light to be emitted. The time measurements correlate to the oxygen concentration.

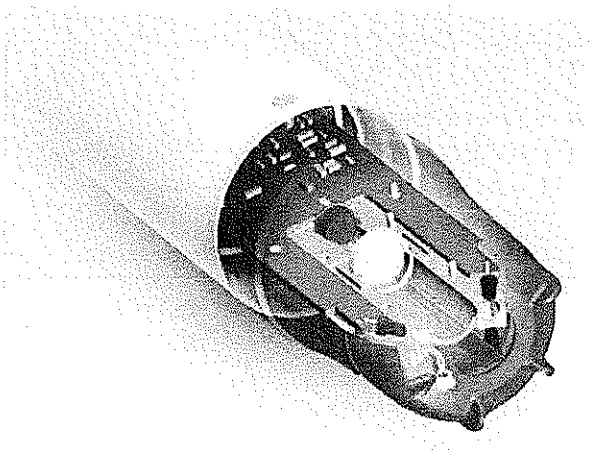

3/12/18
e

Dimensions

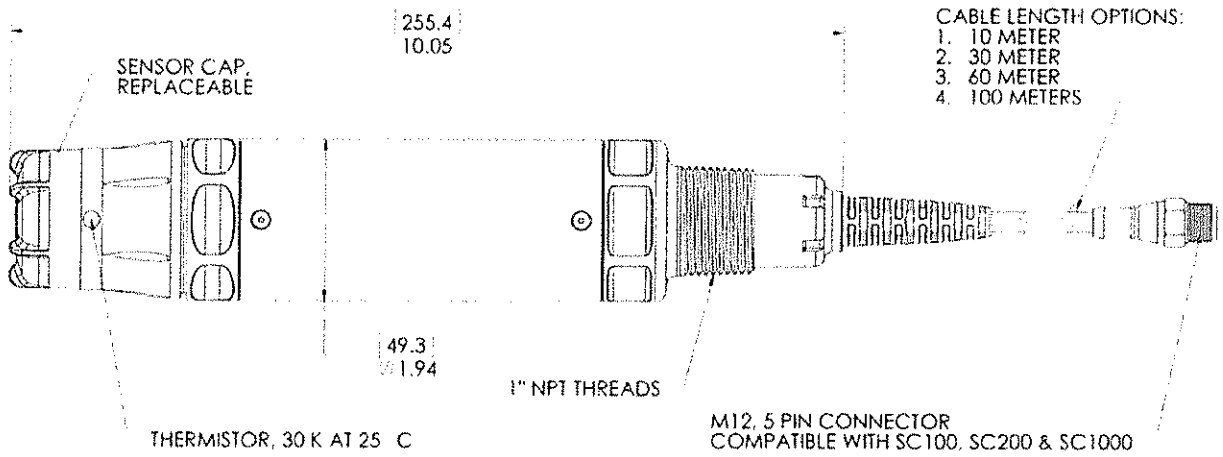

Installation / Mounting

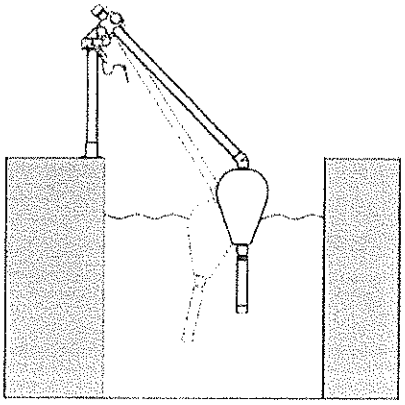

Float Mount Kit

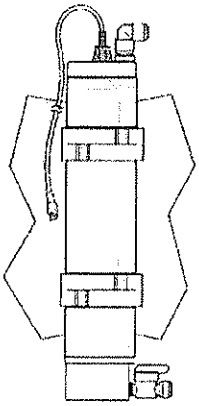

Flow Cell

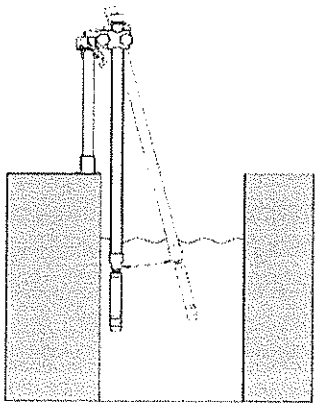

Pole Mount Kit

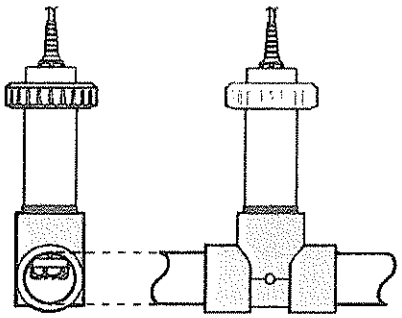

Union Mount Kit

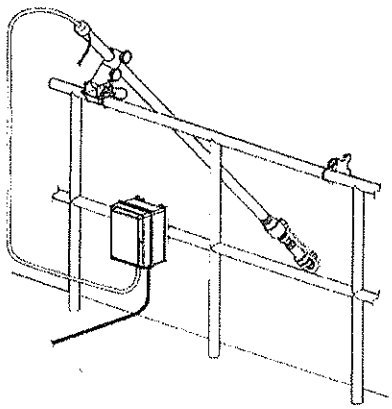

Air Blast Cleaning System

3/12/18

Ordering Information

9020000	Hach LDO Model 2 Probe
9020000-UPGRADE	LDO Probe, Mounting Conversion Adapter
9020000-SC200	LDO Probe, Mounting Conversion Adapter, sc200 controller with 2 channels

Accessories

5867000	Digital Termination Box
5796000	Digital Extension Cable, 7.7 m (25 ft.)
5796100	Digital Extension Cable, 15 m (50 ft.)
5796200	Digital Extension Cable, 31 m (100 ft.)
6860000	High Output Air Blast Cleaning System, 115 Vac
6860100	High Output Air Blast Cleaning System, 230 Vac
9253500	Air Blast Hardware Components

Replacement Parts

9021100	LDO Model 2 Sensor Cap Replacement Kit

Mounting Kits

9253000	Pole Mount Kit, PVC
9253100	Ball Float Mount Kit, PVC
9257000	Union Mount Kit, PVC
9253400	Mounting Conversion Adapter, LDO Model 1 to LDO Model 2
7300800	1 NPT sc Sensors Flow Cell

Controllers

sc200 Digital Controllers

LXV404.99.00552	sc200 controller, 2 channel, digital
LXV404.99.00542	sc200 controller, 2 channel, digital & mA input
LXV404.99.00502	sc200 controller, 1 channel, digital
LXV404.99.00512	sc200 controller, 2 channel, digital & pH/DO
LXV404.99.00522	sc200 controller, 2 channel, digital & Conductivity
LXV404.99.00532	sc200 controller, 2 channel, digital & Flow

sc1000 Digital Controllers

LXV402.99.00002	sc1000 Display Module
LXV400.99.1R572	sc1000 Probe Module, 4 sensors, 4 mA Out, 4 mA In, 4 Relays, 110-230V
LXV400.99.1B572	sc1000 Probe Module, 4 sensors, 4 mA Out, 4 mA In, 4 Relays, Modbus RS485, 110-230V
LXV400.99.1F572	sc1000 Probe Module, 4 sensors, 4 mA Out, 4 mA In, 4 Relays, PROFIBUS DP, 110-230V
LXV400.99.1R582	sc1000 Probe Module, 6 sensors, 4 mA Out, 4 mA In, 4 Relays, 110-230V

HACH COMPANY World Headquarters: Loveland, Colorado USA

United States 800-227-4224 tel 970-669-2932 fax orders@hach.com
Outside United States: 970-669-3050 tel 970-461-3939 fax int@hach.com
hach.com

LIT2455 Rev 3
A14 Printed in U.S.A.
©Hach Company, 2014. All rights reserved.
In the interest of improving and updating its equipment, Hach Company reserves the right to alter specifications to equipment at any time.

HACH® Be Right™

3/12/18
e

Certificate

Standard **ISO 9001:2008**

Certificate Registr. No 01 100 4412

Certificate Holder: **HACH LANGE GmbH**
Königsweg 10 • D - 14163 Berlin

including the locations:
HACH LANGE GmbH
Willstätterstraße 10 • D - 40549 Düsseldorf

Scope: development, manufacture, sales and service of measuring systems for water analysis inclusively retraction of used reagents and their environmentally responsible disposal

Proof has been furnished by means of an audit that the requirements of ISO 9001:2008 are met.

Validity: The certificate is valid from 2016-02-22 until 2018-09-14
First certification 1995

2016-02-18

TÜV Rheinland Cert GmbH
Am Grauen Stein · 51105 Köln

www.tuv.com DAkkS TÜVRheinland

3/12/18

SOLITAX sc TURBIDITY & SUSPENDED SOLIDS SENSORS

Applications

- Drinking water
- Wastewater
- Beverage
- Industrial water
- Power

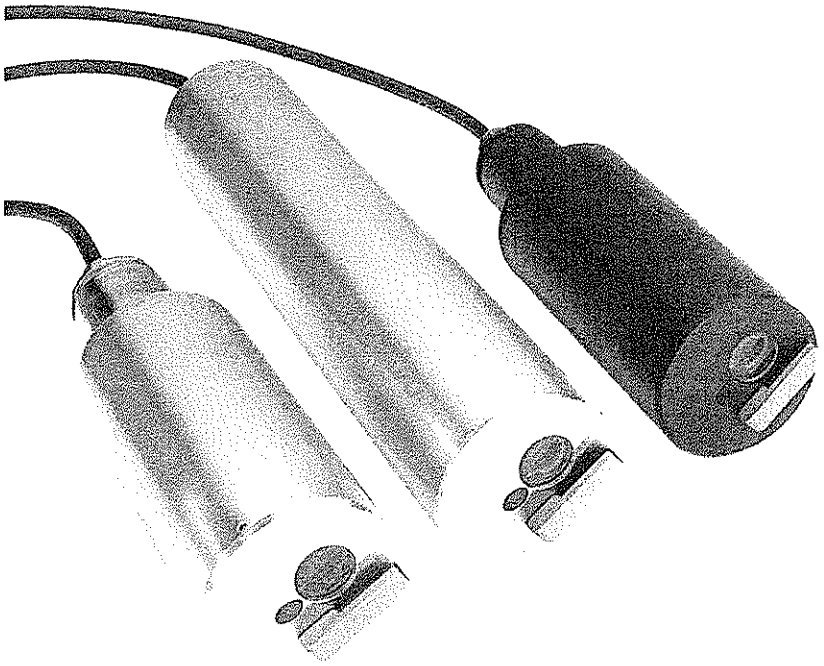

PROGNOSYS® READY

Accurate, colour-independent suspended solids and turbidity measurements

Greater accuracy, less maintenance

Hach®'s Solitax sc sensors provide accurate, colour independent measurement of turbidity and suspended solids in drinking water, wastewater and industrial process applications. A self cleaning device prevents biological growth and interference of gas bubbles. This system's reliable performance and full data communication capability help improve process control and reduce treatment costs associated with polymer use, digester volume, and sludge handling.

Excellent correlation to laboratory analysis

Solitax sc sensors show an exceptional correlation to laboratory analysis. On-line measurement not only saves time on manual analysis, but also provides critical real-time measurements that can be used to operate the plant more efficiently.

Fully serviceable sensors

Conventional turbidity and suspended solids sensors are potted and are discarded when they no longer function. Solitax sc sensors are fully serviceable, which often doubles the useful life of the sensor.

Easy one-point calibration

Factory calibrated in conformity with DIN EN ISO 7027 for long-term calibration stability. Calibration is easy with a simple correction factor procedure.

Multi-channel, multi-parameter system

Multiple Solitax sc sensors can be installed on one Hach SC Controller. The same controller can also accommodate any combination of parameters. All of Hach's model sc sensors are "plug and play" with no complicated wiring or set-up procedure necessary.

HACH®
Be Right™

3172118

Technical Data*

	For insertion in pipes		For immersion in open tanks		
Model	Solitax inline sc	Solitax highline sc	Solitax t-line sc	Solitax ts-line sc	Solitax hs-line sc
Parameters	Suspended Solids, Turbidity	High Range Suspended Solids, Turbidity	Turbidity	Suspended Solids, Turbidity	High Range Suspended Solids, Turbidity
Measuring range turbidity	0.001 - 4000 NTU	0.001 - 4000 NTU	0.001 - 4000 NTU	0.001 - 4000 NTU	0.001 - 4000 NTU
Measuring range TSS	0.001 - 50 g/L	0.001 - 500 g/L (the upper range is dependent on the sample property)	—	0.001 - 50 g/L	0.001 - 500 g/L (the upper range is dependent on the sample property)
Units	Turbidity: User selectable - NTU, FNU, or TE/F Suspended Solids: User selectable - g/L, mg/L, ppm, or % solids				
Accuracy	Turbidity up to 1000 NTU: without calibration < 5 % of the measured value ±0.01 NTU with calibration < 1 % of the measured value ±0.01 NTU				
Repeatability	TSS content: < 3 %				
	Turbidity: < 1 %				
Response time	1 – 300 s adjustable				
Calibration method	Turbidity: Formazin or StablCal Standard (at 800 NTU). Suspended Solids: Sample specific, based on gravimetric TSS analysis with a correction factor procedure.				
Certifications	CE				
Flow	Max. 3 m/s (the presence of air bubbles affects the measurement)				
Operating temperature range	0 - 40 °C				
Pressure range	Stainless steel insertion sensor: 6 bar or 60 m		PVC: 1 bar or 10 m	Stainless steel immersion sensor: 6 bar or 60 m PVC: 1 bar or 10 m	
Material	Optics carrier and sleeve: stainless steel 1.4571 or black PVC Wiper arm: stainless steel 1.4581; Wiper blade: silicone (standard) Optional: Viton (LZX578); Wiper shaft: stainless steel 1.4571 Threaded cable fitting: stainless steel 1.4305 or white PVC				
Weight	Immersion: Stainless steel: 1.38 kg; PVC: 0.52 kg Insertion: Stainless steel: 2.4 kg				
Cable length	10 m (optional extension cables available)				

Subject to change without notice.

3/12/18

Principle of Operation

Solitax sc ts-line sensor with dual-beam optics and added backscatter detector

- Dual infrared light beams. LED light source transmits light at 45° to sensor face.
- Nephelometric photoreceptors detect light at 90° to the transmitted light beam.
- Backscatter photoreceptor (included on all models except the Solitax sc t-line) detects light at 140° to the transmitted light beam to measure suspended solids in heavily loaded sample streams.
- Self-cleaning wiper, optional.
- T-line probes measure turbidity only. TS, HS, inline, and highline sensors measure either turbidity or suspended solids.

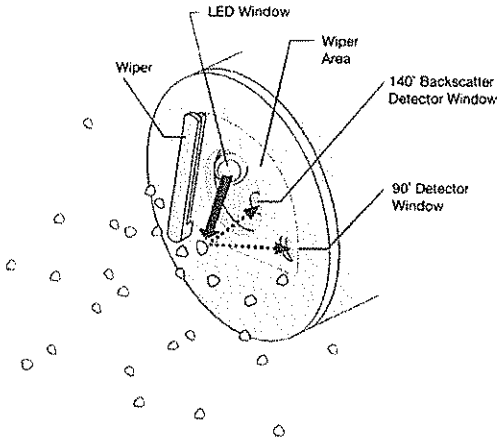

Dimensions

Hach Solitax sc sensors can be fixed to the rim of the tank for immersion applications or inserted directly through the sidewall of a pipeline for insertion applications. A variety of installation kits are available.

Solitax sc Insertion Probe

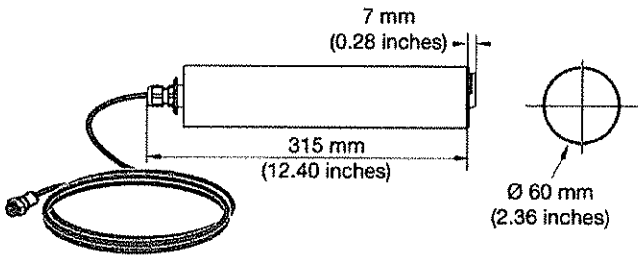

Solitax sc Immersion Probe

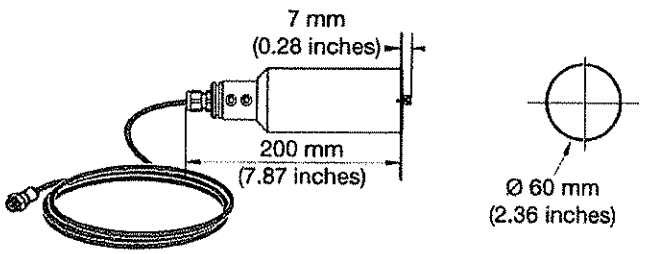

Installation/Mounting

Installation for mounting Solitax sc for immersion in open tanks. (Stainless steel pole mount kit, Prod. No. LZY714.99.53120)

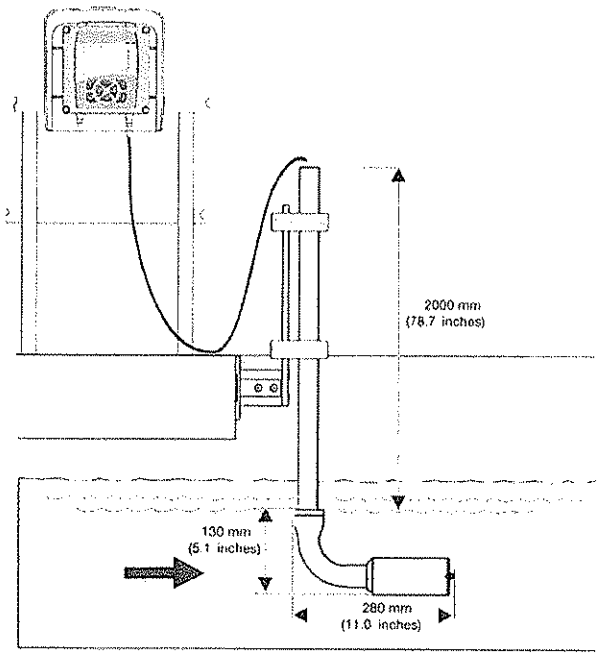

Fixture with ball valve for mounting Solitax sc models inline and highline sensors in pipes., minimum pipe size 100 mm (4-in.) (Prod. No. LZX337, max. pressure 6 bar; Prod. No. LZX936, max. pressure 1 bar.

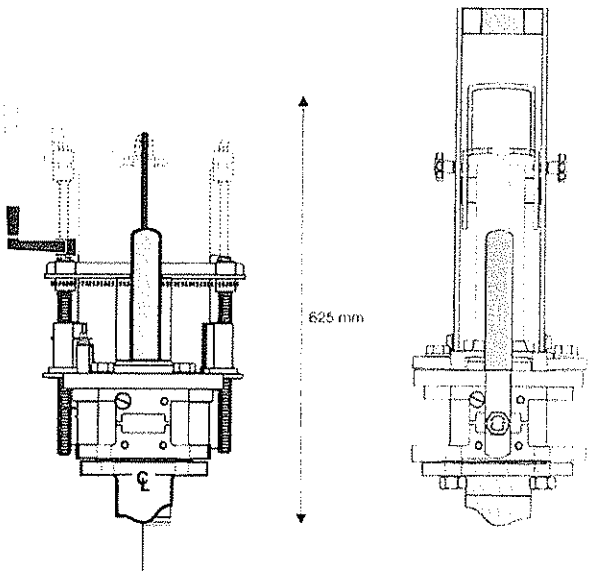

3/12/18

Order Information

Solitax sc Probes

Immersion Probes

LXV423.99.10000	Solitax t-line sc Turbidity immersion probe, 0.001 - 4000 NTU, with wiper, PVC
LXV423.99.12000	Solitax t-line sc Turbidity immersion probe, 0.001 - 4000 NTU, w/o wiper, PVC
LXV423.99.10100	Solitax ts-line sc Turbidity (0.001-4000 NTU) and Suspended Solids (0.001-50 g/L) immersion probe, with wiper, PVC
LXV423.99.12100	Solitax ts-line sc Turbidity (0.001-4000 NTU) and Suspended Solids (0.001-50 g/L) immersion probe, w/o wiper, PVC
LXV423.99.00100	Solitax ts-line sc Turbidity (0.001-4000 NTU) and Suspended Solids (0.001-50 g/L) immersion probe, with wiper, stainless steel
LXV423.99.02100	Solitax ts-line sc Turbidity (0.001-4000 NTU) and Suspended Solids (0.001-50 g/L) immersion probe, w/o wiper, stainless steel
LXV423.99.10200	Solitax hs-line sc Turbidity (0.001-4000 NTU) and Suspended Solids (0.001-500 g/L) immersion probe, with wiper, PVC
LXV423.99.12200	Solitax hs-line sc Turbidity (0.001-4000 NTU) and Suspended Solids (0.001-500 g/L) immersion probe, w/o wiper, PVC
LXV423.99.00200	Solitax hs-line sc Turbidity (0.001-4000 NTU) and Suspended Solids (0.001-500 g/L) immersion probe, with wiper, stainless steel
LXV423.99.02200	Solitax hs-line sc Turbidity (0.001-4000 NTU) and Suspended Solids (0.001-500 g/L) immersion probe, w/o wiper, stainless steel

Insertion Probes

LXV424.99.00100	Solitax inline sc Turbidity (0.001-4000 NTU) and Suspended Solids (0.001-50 g/L) built-in probe, with wiper, stainless steel
LXV424.99.02100	Solitax inline sc Turbidity (0.001-4000 NTU) and Suspended Solids (0.001-50 g/L) built-in probe, w/o wiper, stainless steel
LXV424.99.00200	Solitax highline sc Turbidity (0.001-4000 NTU) and Suspended Solids (0.001-500 g/L) built-in probe, with wiper, stainless steel
LXV424.99.02200	Solitax highline sc Turbidity (0.001-4000 NTU) and Suspended Solids (0.001-500 g/L) built-in probe, w/o wiper, stainless steel

Installation Accessories

LZY714.99.53120	Stainless Steel pole mount kit for Solitax t-line, ts-line, and hs-line sc immersion sensors, including 10 cm base and 2 m pole with sensor adapter
LZX337	Stainless steel ball valve safety armature/extraction fitting for Solitax sc inline and highline probes, maximum operating pressure 6 bar
LZX936	Stainless steel ball valve armature, maximum operation pressure 1 bar
LZX660	Non-coped stainless steel welding flange for insertion kit
LZX661	Non-coped carbon steel welding flange for insertion kit

Be certain in your measurements with a first class Service Partner. Be confident with Hach Service.

By having regular on-site preventative maintenance and calibration, you maximise your measurement reliability and instrument uptime. Hach Service Programs give you full assurance that your instruments stay in compliance, and you stay within your budget.

Start-Up:
Commissioning will ensure you get the best performance from your instrumentation from the first day you use it.

Service Agreements:
Hach offers a wide range of service agreements that can be tailored to you to help maximise your measurement reliability and instrument uptime.

Contact us to get a service offering designed for you.

DOC053.52.35118.Dec16

HACH® Be Right®

3/12/18

3/12/78

5.5 FINAL SETTLING TANK

3/72198

KARKANIAS-ENVIRONMENTAL TECHNOLOGY S.A.

Industrial Area of Larisa I.B. 3053, P.C. 41004 Larisa
Tel +302410541386 Fax +302410541354

Circular Sedimentation tank

EQUIPMENT

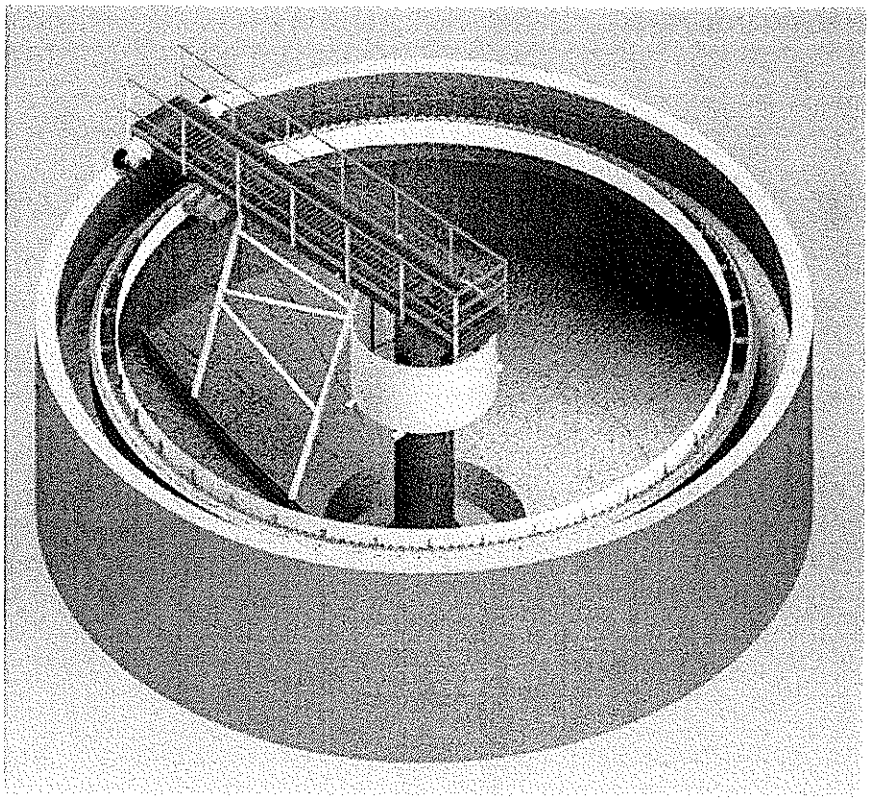

The equipment is classified as follows:
-Protection provided against electric shock: Class II
-Protection provided against the intrusion of solid objects, dust, and water: IP44

The scraper bridge is manufactured according to the following instructions and standards:
- EN 292-1: Safety of machinery - Basic concepts, general principles for design. Basic terminology, methodology
- EN 292-2: Safety of machinery - Basic concepts, general principles for design. Technical principles and specifications
- EN 60204-1: Safety of machinery - Electrical equipment of machines. General requirements

Prospect

3/12/18

KARKANIAS-ENVIRONMENTAL TECHNOLOGY S.A.

Industrial Area of Larisa - P.B. 3053, P.C. 41004 Larisa
Tel. +302410541386 Fax. +302410541354

SPECIFICATIONS of SCRAPPER BRIDGE

Type	: ROTATING / DK05
Bridge Length	: 8,50 m
Walkway Width	: 0,80 m

Gear Motor

Manufacturer	: BONFIGLIOLI RIDUTTORI
Type of reducer	: MVF44_86FC_700
Type of electric motor	: P71 BN71B B4
Motor Power	: 0.37 KW, 400 V, 50 Hz, class F
Torque	: 474 Nm
Speed	: 2 rpm^{-1}

Power Transmission

Directly to the gearbox

TECHNICAL DESCRIPTION

The rotating half bridge scraper is designed to remove settled sludge and scum from circular settlement tanks. The equipment in a tank comprises a galvanized fabricated bridge structure of channel or universal beam sections complete with a galvanized chequer plate walkway and suitable handrails. The scraper bridge is constituted also from the central pivot, a rotation unit, the bottom scraper, the surface scraper with scum box and the central deflecting hood while additional equipment is offered which consists of scum board and weir. All the emerged parts of the structure are made of hot-dip galvanized carbon steel S235JR and the immersed parts of stainless steel type AISI 304L.

Bridge structure

The bridge frame is a frame structure made from standard open section beams. The designation of the Chanel profiles depends on the dimensions of the bridge. Its walkway flooring consists of galvanized chequer plate while double-row tubular handrailing of 1m height is supplied.

Central pivot

The scraper bridge is supplied with a central heavy duty bearing unit that is adapted to the tank's center part. This unit is suitable to bear all the loads (axial, radial and torque) safely and will not be affected from the level differences of the peripheral wall. Slip ring collector for supplying electricity to the motor is included.

Prospect

3/12/18

Industrial Area of Larisa T.B. 3053, P.C. 41004 Larisa
Tel. +302410541386 Fax. +302410541354

The central support of the tank can be made of either of reinforced concrete or of stainless steel beam (in case of small diameter tanks).

Drive unit

The drive unit is located at the outer end of the bridge and consists of a motor reducer and two wheels, one driving wheel and one driven wheel. The motor reducer is placed on the driving wheel in order to achieve the bridge motion. The gear motor is suitable for continuous operation in outdoor installation (weatherproof). The wheels are manufactured from cast iron and wear-resistant rubber, supported by ball bearings.

Bottom scraper

A series of bottom scraper blades are attached on the bridge by vertical tubular supports and remove the settled sludge from the tank floor. The scrapers are arranged to form a continuous volute (spiral) pattern to ensure that sludge is directed towards a central hopper in the tank floor. The angle of the spiral is so calculated, to ensure optimal scanning of the sludge without dead spots in the center of the tank.

Surface scraper with scum box

Surface scraper is also located under the bridge at the water level of the tank and moves the floating scum towards the periphery where is located the scum box.

Energy dissipating well

The energy dissipating well made of stainless steel intends to calm the water, distributing it evenly throughout the enclosure.

Scum board and weir

The scum board is made of stainless steel and prevents the escape of floating scum in the weir. The perimeter weir is a triangular V-notch weir and is also made of stainless steel sheet.

Prospect 3/12/18

KARKANIAS-ENVIRONMENTAL TECHNOLOGY S.A.

Industrial Area of Larisa – P.B. 3053, P.C. 41004 Larisa
Tel. +302410541386 Fax. +302410541354

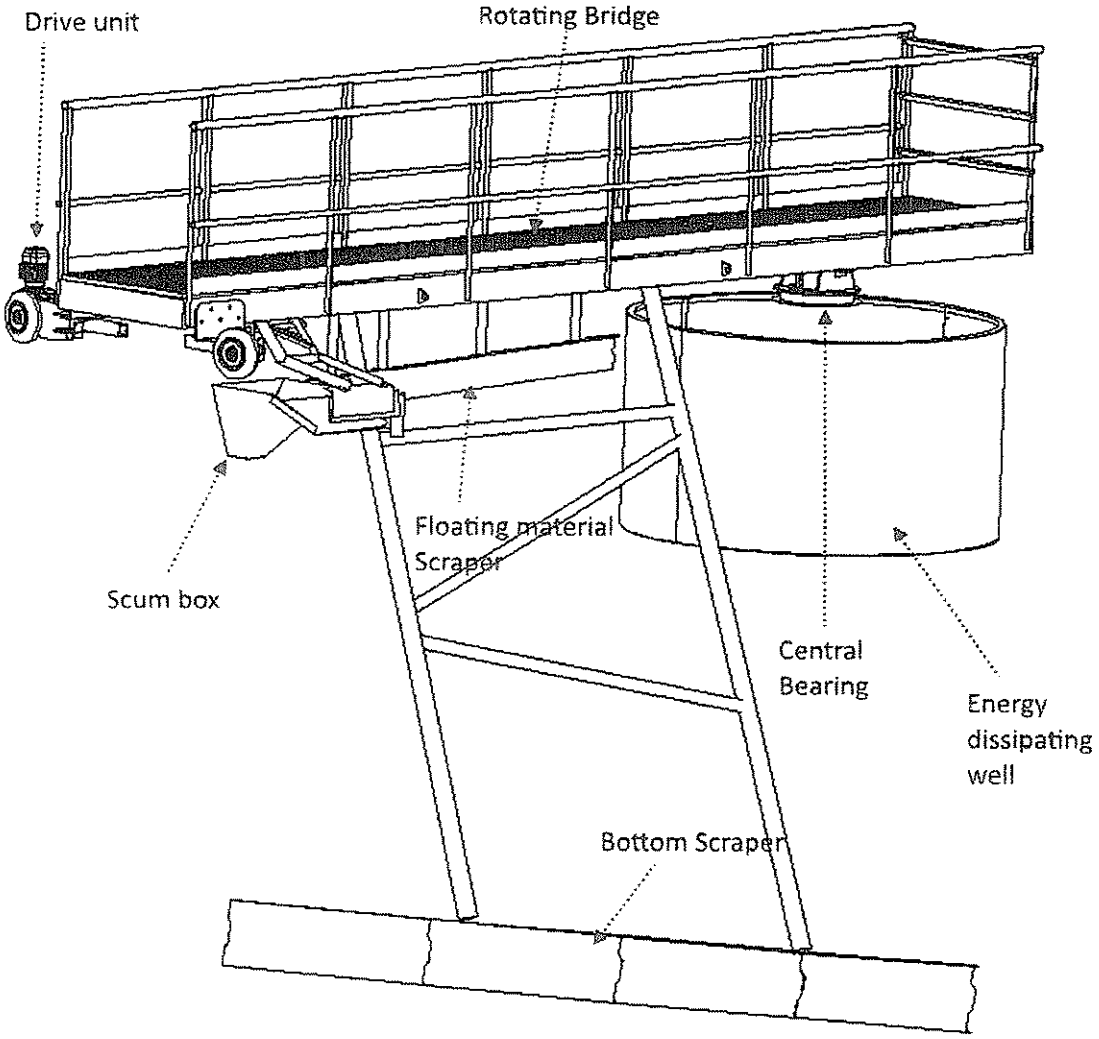

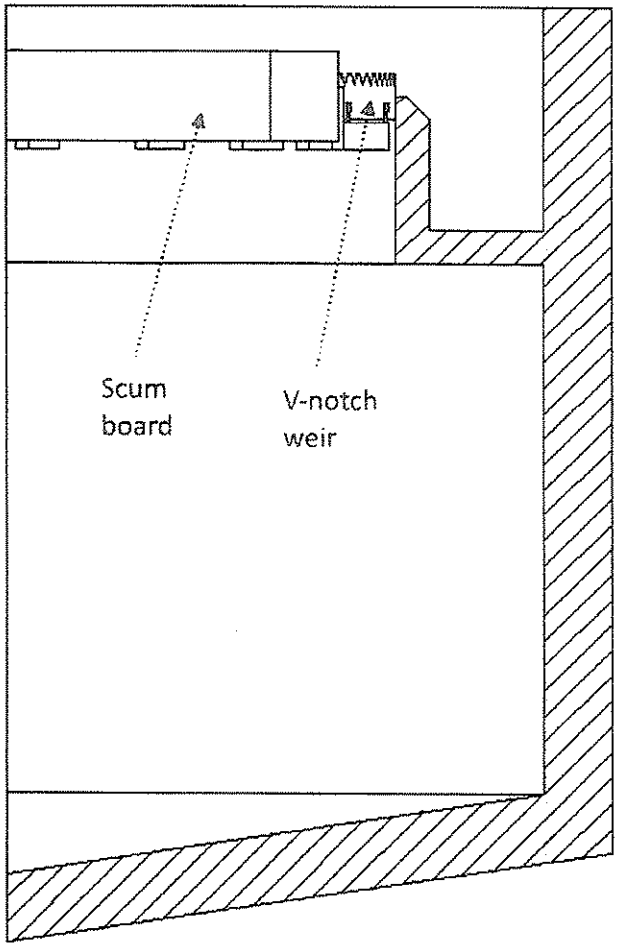

Prospect

KARKANIAS-ENVIRONMENTAL TECHNOLOGY S.A.

Industrial Area of Larisa – T.B. 3053, P.C. 41004 Larisa
Tel. +302410541386 Fax. +302410541354

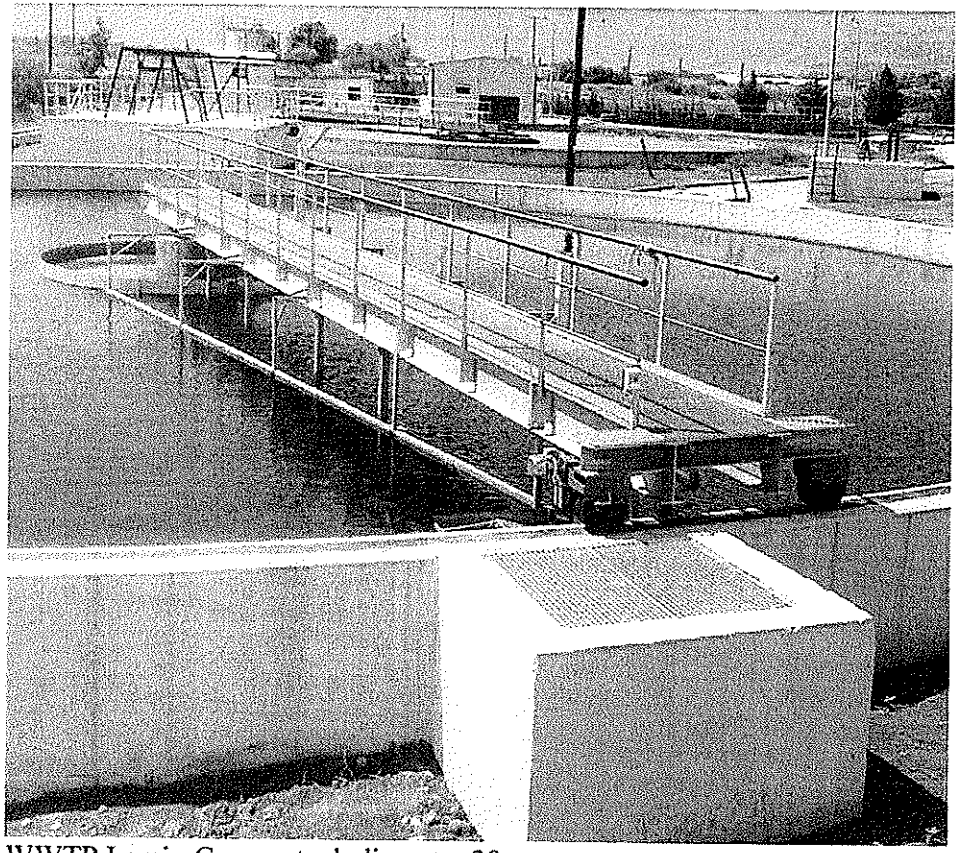

WWTP Lamia-Greece, tank diameter 30 m

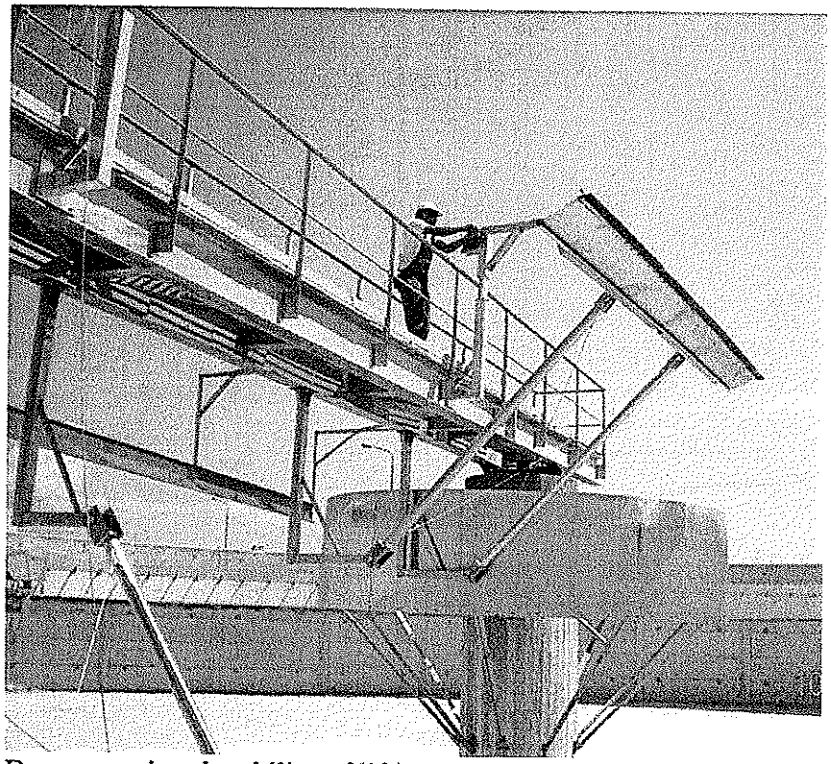

Demonstrating the ability of lifting the sludge scraper

Prospect

KARKANIAS-ENVIRONMENTAL TECHNOLOGY S.A.

Industrial Area of Larisa – T.B. 3053, P.C. 41004 Larisa
Tel. +302410541386 Fax. +302410541354

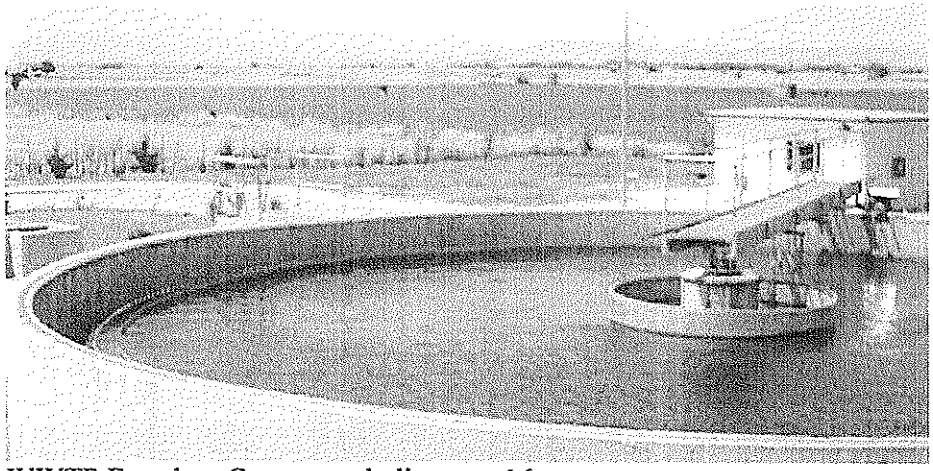

WWTP Farsala – Greece, tank diameter 16 m

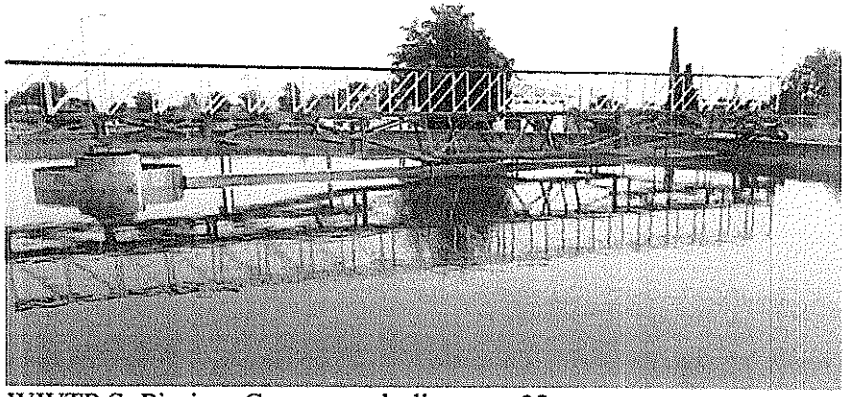

WWTP S. Pieria – Greece, tank diameter 32 m

WWTP Almyros – Greece, tank diameter 18 m

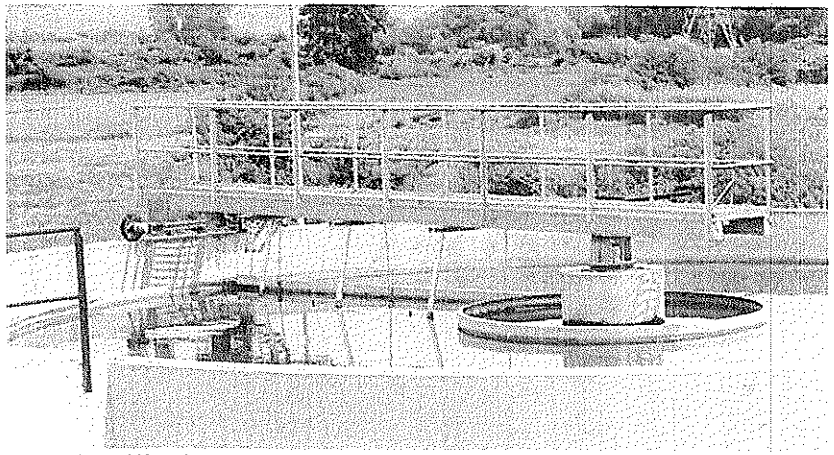

WWTP Filippiada – Greece, tank diameter 15 m

Prospect

5.6 RETURN ACTIVATED SLUDGE AND EXCESS SULDGE PUMPING STATION

3/12/18

Έργο: Ημερ/νία: 2017-09-06
Αριθμός Έργου: Συντάκτης:

Τεχνικά στοιχεία

Υποβρύχια αντλία λυμάτων Rexa PRO C10 DA-518 / EAD0X4-T0035-540-O

Αντλία							
Τύπος αντλίας		PROC10 D A - 518		Είδος εγκατάστασης		Einhängevorrichtung	
Πτερωτή (διάμ.)	Μέγ. Δυνατή	195	mm			DN100/2RK	
	Τυπικό (βασικό)	195	mm	Ελεύθερο πέρασμα		100	mm
	Σχεδιασμ.	195	mm	Στόμιο αναρ.	Βαθμ. PN	PN10	
	Ελάχ. Δυνατή	195	mm		Ονομ. διάμ.	DN100	
Ονομαστ. αριθμός στροφών		1450	1/min		Πρότυπο	WILO-S	
Συχνότητα		50	Hz	Στόμιο κατάθλ.	Βαθμ. PN	PN10	
Τύπος πτερωτής		Μονοκάναλη			Ονομ. διάμ.	DN100, Size 4	
Κατασκευή πτερωτής		Κλειστή			Πρότυπο	WILO-D	

Βάρη				
Βάρος υδραυλ. τμήματος αντλίας	Μέγ. 41	kg	Βάρος συγκροτήματος	Μέγ. 85 kg
Βάρος κινητήρα	44	kg		

Υλικά κατασκευής			
Κέλυφος αντλίας	EN-GJL-250		
Δακτύλ. διαρροής	1.4308		
Πτερωτή	EN-GJL-250		
Περιστρεφ. δακτύλ. φθοράς	1.4462/1.4470		

Κινητήρας				
Ονομασία κινητήρα	P 13.2-16/EAD0X4-T-L01		Αριθμός πόλων	4
Ονομ. ισχύς	3,45	kW	Ονομαστ. ταχύτ. Περιστροφής	1393 rpm
Απορρόφηση ισχύος σε Ονομ. ισχύ				4,45 kW
Ονομ. τάση				400 ~3 V
Απορρόφ. ρεύματος στην ονομ. ισχύ				8,1 A
Βαθμός απόδ. στην ονομ. ισχύ				77,6 %
συνφ στην Ονομ. ισχύ	0,8		Ονομ. συχνότητα	50 Hz
συνφ εκκίνησης	0,5		Είδος λειτουργίας: υγρή	S1
Ρεύμα εκκίνησης DOL	53	A	Είδος λειτουργίας: ξηρή	S2 30, S3 25%
Ρεύμα εκκίνησης Y/Δ	17,5	A	Μέγ. θερμοκρασία ρευστού	40 °C
Ροπή στρέψης εκκίνησης	67	Nm	Μέγ. αριθμ. ωριαίων εκκιν.	50
Ροπή αδράνειας μάζας	0,0042	kg m²	Βαθμός προστασίας	IP 68
Επιλεγμ. αντιεκρ. Προστασία	ATEX		Αριθμός Ex	BVS 11 ATEX E 119 X
Σήμανση Ex	II 2G Ex db IIB T4 Gb			
Καλώδιο σύνδεσης κινητήρα			7G1,5 H07RN-F	

Στοιχεία σημείου λειτουργίας							
Παροχή	99,8	m³/h	Ρευστό μέσον	Νερό, καθαρό			
Μαν. ύψος	7,7	m	Τιμή NPSH της αντλίας		m		
Ισχύς στον άξονα P_2	2,95	kW	Ταχύτητα περιστροφής	1397	rpm		
Βαθμός απόδ. Αντλίας	72,3	%	Ολικός βαθμός απόδοσης	$= \frac{P_2 * \text{Βαθμός απόδ. Αντλίας}}{P_1}$			
Απορροφώμενη ισχύς P_1	3,75	kW					
Μέγ. παροχή	155,8 m³/h	Μαν. ύψος σε Μέγ. Παροχή	6 m	Μαν. ύψος σε μηδεν. παροχή	12,7 m		
Σημείο βέλτ. Απόδ. Q (ΣΒΑ)	143,1	m³/h	Σημείο βέλτιστης απόδοσης H (ΣΒΑ)	13,3	m		
Νο είδους	6076772						

3/12/18

Έργο:
Αριθμός Έργου:

Ημερ/νία: 2017-09-06
Συντάκτης:

wilo

Τεχνικά στοιχεία

Υποβρύχια αντλία λυμάτων — Rexa PRO C10 DA-518 / EAD0X4-T0035-540-O

Τεχνική περιγραφή
Υποβρύχια αντλία λυμάτων, ως υποβρύχιο συγκρότημα με κινητήρα, για σταθερή, κατακόρυφη τοποθέτηση, για άντληση ανεπεξέργαστων, χημικά και μηχανικά μη διαβρωτικών για την αντλία, λυμάτων. Ακτινικά διατεταγμένο στόμιο κατάθλιψης και αξονική αναρρόφηση. Το συγκρότημα είναι κατασκευασμένο με τρόπο εύκολο για τη συντήρηση. Οι παροχές πρέπει να εξασφαλίζονται κατά ISO 9906 Παρ. A.

Έργο: Ημερ/νία: 2017-09-06
Αριθμός Έργου: Συντάκτης:

wilo

Καμπύλες απόδοσης

Υποβρύχια αντλία λυμάτων — Rexa PRO C10 DA-518 / EAD0X4-T0035-540-O

Στοιχεία ισχύος σε σχέση με: Νερό, καθαρό [100%] ; 20°C; 998,19kg/m³; 0,0036014m³/h
Απόκλιση κατά ISO 9906 / Παράρτημα A.2

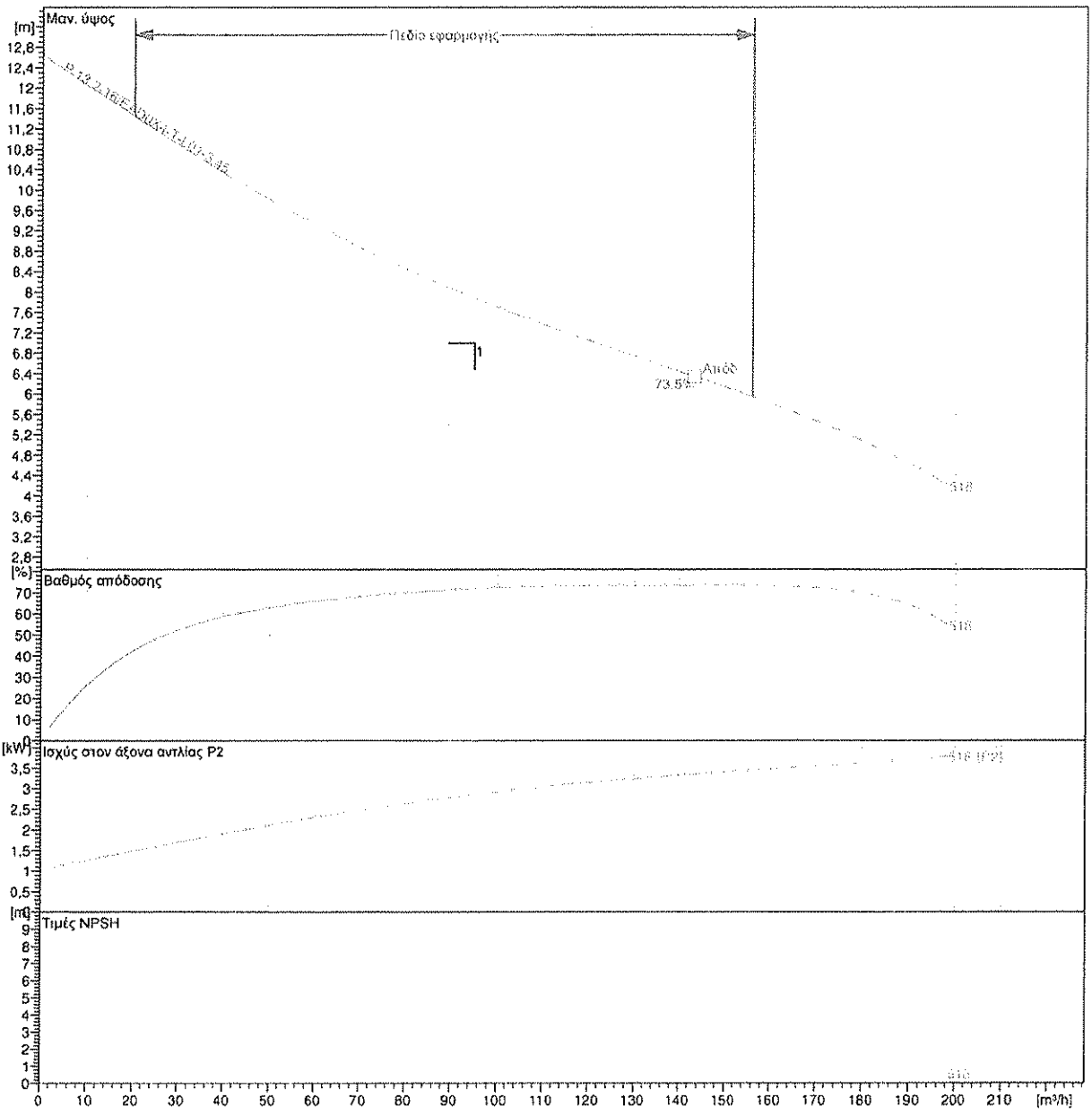

Αντλία			Στοιχεία σημείου λειτουργίας		
Πτερωτή (διάμ.) Σχεδιασμ.	195	mm	Παροχή	99,8	m³/h
Ονομαστικός αριθμός στροφών	1450	rpm	Μαν. ύψος	7,7	m
Συχνότητα	50	Hz	Ισχύς στον άξονα P_2	2,95	kW
Τύπος πτερωτής	Μονοκάναλη		Βαθμός απόδ. Αντλίας	72,3	%
Κινητήρας			Απορροφώμενη ισχύς P_1	3,75	kW
Ονομ. ισχύς	3,45	kW	Τιμή NPSH της αντλίας		m
Επιλεγμ. αντιεκρ. Προστασία	ATEX		Ταχύτητα περιστροφής	1397	rpm

31/12/18

Έργο:
Αριθμός Έργου:

Ημερ/νία: 2017-09-06
Συντάκτης:

wilo

Τεχνικά στοιχεία

Υποβρύχια αντλία λυμάτων

Rexa PRO C10 DA-518 / EAD0X4-T0035-540-O

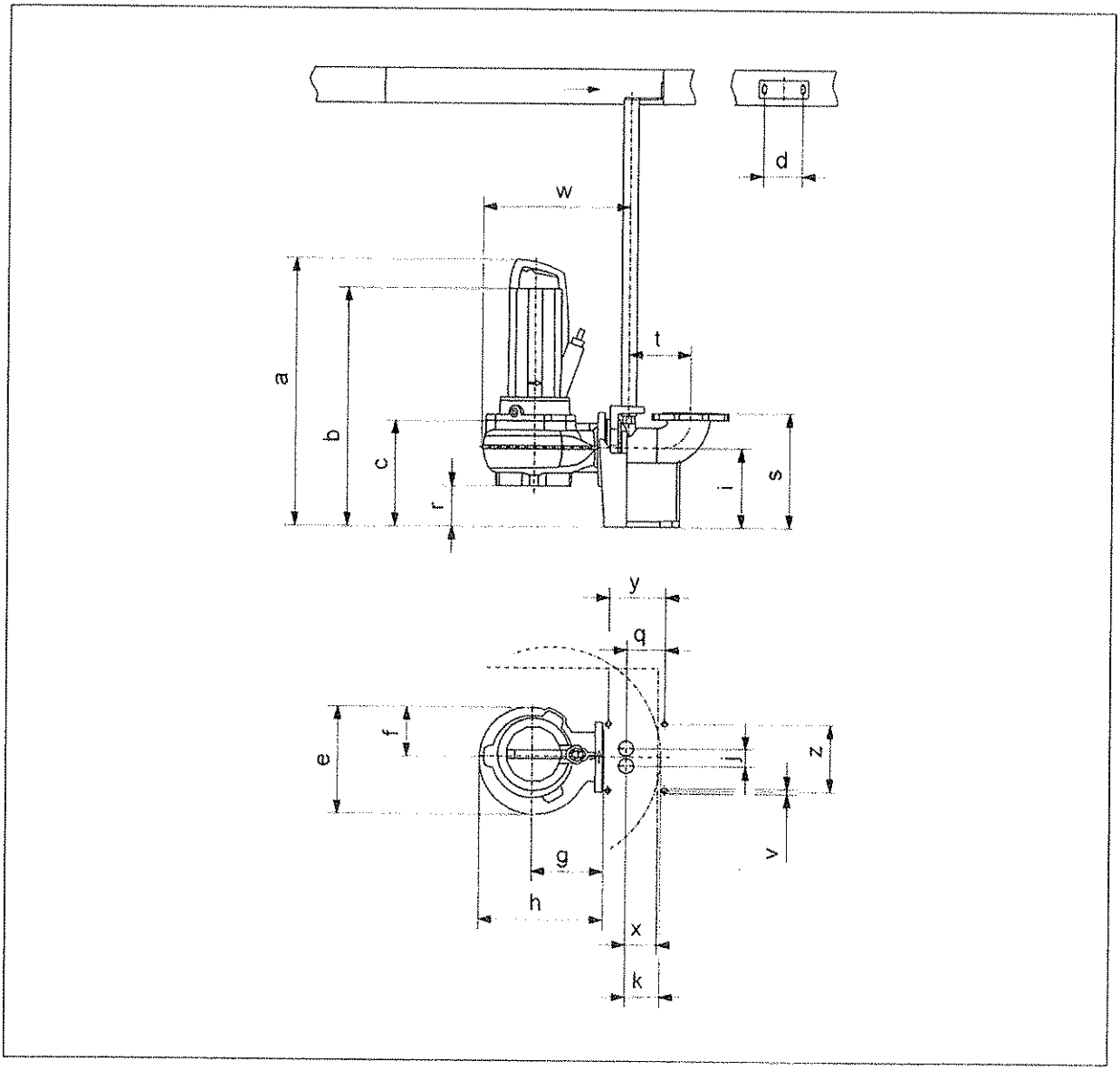

Διαστάσεις σε mm				Συνδέσεις
a	790	r	110	Στόμιο αναρ. DN100 PN10
b	707	s	325	
c	327	t	176	
d	110	v	15	
e	346	w	523	Στόμιο κατάθλ. DN100, Size 4 PN10
f	179	x	90	
g	200	y	160	
h	368	z	190	
i	225			Einhöngevorrichtung DN100/2RK
j	50			
k	98			
q	109			

3/12/18

Έργο: Ημερ/νία: 2017-09-06
Αριθμός Έργου: Συντάκτης:

wilo

Στοιχεία κινητήρα

P 13.2-16/EAD0X4-T-L01-3,45 3,45 kW 400 V 50Hz 3~

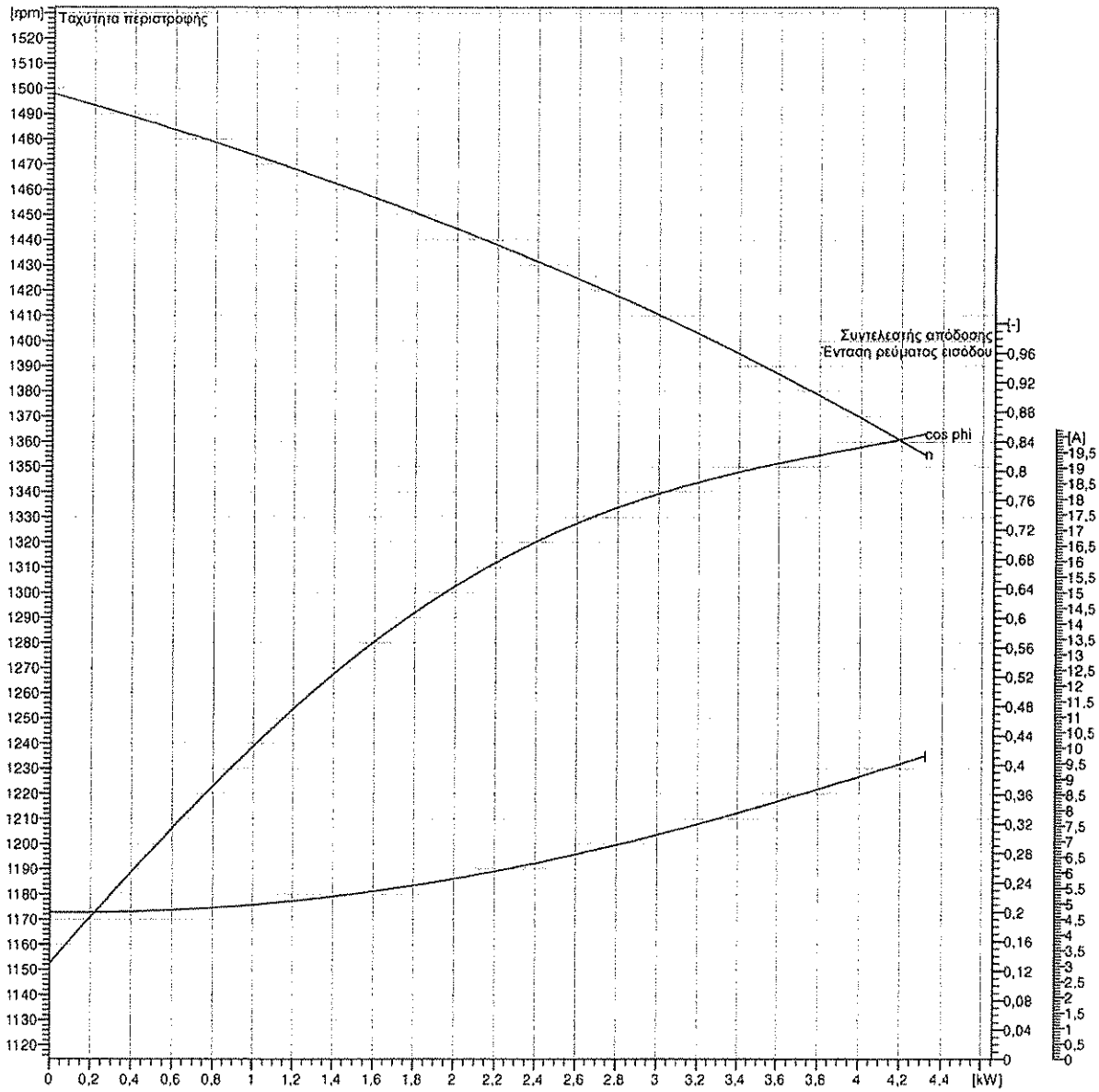

Στοιχεία εφαρμογής			Στοιχεία κινητήρα		
Είδος υποβρύχιας λειτουργίας	S1		Απορρόφηση ισχύος σε Ονομ. ισχύ	4,45	kW
Είδος λειτουργίας: ξηρή	S2 30, S3 25%		Ονομ. ισχύς	3,45	kW
Συντελεστής Service	1		Ονομαστ. ταχύτ. Περιστροφής	1393	rpm
Μέγ. θερμοκρασία ρευστού	40	°C	Απορρόφ. ρεύματος στην ονομ. ισχύ	8,1	A
Αντιεκρηκτική προστασία			Μέγ. αριθμ. ωριαίων εκκιν.	50	
Επιλεγμ. αντιεκρ. Προστασία	ATEX		Βάρος κινητήρα	44	kg
Αριθμός Ex	BVS 11 ATEX E 119 X		Βαθμός απόδ. στην ονομ. ισχύ	77,6	%
Σήμανση Ex	II 2G Ex db IIB T4 Gb		συνφ στην Ονομ. ισχύ	0,8	
Καλώδιο σύνδεσης κινητήρα			Ρεύμα εκκίνησης DOL	53	A
Καλώδιο σύνδ. κινητ.για εκκίνηση DOL	7G1,5 H07RN-F		συνφ εκκίνησης	0,5	
Καλώδιο σύνδ. κινητ. για εκκίνηση Y/Δ			Ροπή στρέψης εκκίνησης	67	Nm
Μέγ. δυνατό καλ. σύνδ. Κινητήρα	7x1,5	mm²	Ροπή αδράνειας μάζας	0,0042	kg m²

3/12/18

CERTIFICATE

This is to certify that

WILO SE

Nortkirchenstraße 100
44263 Dortmund
Germany

with the organizational units/sites as listed in the annex

has implemented and maintains a **Quality Management System**.

Scope:
Development, manufacture, sales and service of pumps and pump systems for Building Services, Water Management and Industry.

Through an audit, documented in a report, it was verified that the management system fulfills the requirements of the following standard:

ISO 9001 : 2008

Certificate registration no.	060313 QM08
Date of revision	2016-04-24
Valid from	2015-04-30
Valid until	2018-04-29
Date of certification	2015-04-30

DAkkS
Deutsche
Akkreditierungsstelle
D-ZM-16074-01-00

DQS GmbH

G. Blechschmidt

Götz Biechschmidt
Managing Director

31/12/18

Annex to Certificate
Registration No. 060313 QM08

WILO SE

Nortkirchenstraße 100
44263 Dortmund
Germany

Location	Scope
522452 **WILO SE** **Felicitasstraße 5** **44263 Dortmund** **Germany**	Development, manufacture, sales and service of pumps and pump systems for Building Services, Water Management and Industry.
522453 **WILO SE** **Strümpenbusch 3** **44357 Dortmund** **Germany**	Development, manufacture, sales and service of pumps and pump systems for Building Services, Water Management and Industry.
283115 **WILO SE** **Heimgartenstraße 1-3** **95030 Hof** **Germany**	Development, Manufacture, Sales and Service of: -pumps and electrical motors for water supply, lowering of water level and booster plants -pumps and electrical motors for sewage disposal and treatment -pumps and electrical motors for drainage of pits, sumps, building sites and so on -submersible mixers and electrical motors for flow generation or for mixing of liquids for communal or industrial applications -technical equipment for sewage treatment plants, digester gas plants, waterworks and pumping stations
070047 **WILO SE** **Anderslebener Straße 161** **39387 Oschersleben** **Germany**	Development and manufacture of pumps and pump systems for Building Services, Water Management and Industry.
521114 **WILO INTEC SAS** **50, avenue Eugene Casella** **18700 Aubigny-sur-Nère** **France**	Design, manufacturing and sales of circulators and hydraulic units for Heating Ventilation Air Conditioning industry.

This annex (edition: 2016-04-24) is only valid in connection with the above-mentioned certificate.

3/12/18

Annex to Certificate
Registration No. 060313 QM08

WILO SE

Nortkirchenstraße 100
44263 Dortmund
Germany

Location	Scope
527816 **WILO INTEC SAS organizačná zložka** **Slovakia** **Zlatovská 2193/33** **91105 Trenčin** **Slovakia**	Manufacturing of circulators for Heating Ventilation Air Conditioning industry.
520706 **Wilo Salmson France SAS** **80 boulevard de l'Industrie** **CS 90527** **53005 Laval Cedex** **France**	Development, manufacture, sales and service of pumps and pump systems for Building Services, Water Management an Industry.
522448 **Wilo Salmson France SAS** **ZA Autoroutière 1005 bd de la Communication** **53950 Louverné** **France**	Development, manufacture, sales and service of pumps and pump systems for Building Services, Water Management an Industry.
521111 **Wilo Salmson France SAS** **30, rue du 35e Regiment d'Aviation** **69673 Bron** **France**	Development, manufacture, sales and service of pumps and pump systems for Building Services, Water Management an Industry.
520707 **Wilo Salmson France SAS** **53, boulevard de la République Espace Lumière, Bât. 6** **78400 Chatou** **France**	Development, manufacture, sales and service of pumps and pump systems for Building Services, Water Management and Industry.

This annex (edition: 2016-04-24) is only valid in connection with the above-mentioned certificate.

3/12/18

Annex to Certificate
Registration No. 060313 QM08

WILO SE

Nortkirchenstraße 100
44263 Dortmund
Germany

Location	Scope
521112 **WILO Pumps Ltd.** **Unit B1 Corcanree Business Park** **Dock Road** **Limerick** **Ireland**	Manufacture of pumps for Building Services.
521113 **STEMMA S.R.L.** **via postale VECCHIA, 20** **36070 Trissino.VI** **Italy**	Manufacture of stainless steel components for pumps and Technical products.
520708 **WILO China Ltd.** **No. 10 Zhaofeng 2nd Street, Zhaofeng Industrial Zone,** **Zhaoquanying, Shunyi District,** **101300 Beijing** **China**	Manufacturing, Sales and After Sales Service of Pumps, Pump Systems and Pump Systems Piece Parts including Control Box for Building, Municipalities, Industry and Agriculture
522450 **WILO China Ltd.** **No.285 Qinhuang West Street,** **Qinhuangdao Economic & Technological Development Zone** **066004 Qinhuangdao, Hebei Province** **China**	Manufacturing, of Pumps for Building, Industry and Agriculture
521117 **WILO ELEC CO. LTD.** **No.285 Qinhuang West Street,** **Qinhuangdao Economic & Technological Development Zone** **066004 Qinhuangdao, Hebei Province** **China**	Research, Design and Production of AC Motors for Pumps

This annex (edition: 2016-04-24) is only valid in connection with the above-mentioned certificate.

3/12/98

Annex to Certificate
Registration No. 060313 QM08

WILO SE

Nortkirchenstraße 100
44263 Dortmund
Germany

Location	Scope
521118 **Wilo Mather and Platt Pumps Private Limited** **S. No. 162,** **Mumbai - Pune Road,** **Chinchwad** **Pune 411 019** **India**	Design, development, manufacture, installation and servicing of centrifugal pumps/pump sets and valves and contracts of pumping system on turnkey basis.
521120 **Wilo Mather and Platt Pumps Private Limited** **Sales** **Sales office, 201to 206,** **Premier Plaza,** **Mumbai - Pune Road,** **Chinchwad** **Pune 411 019** **India**	Design, development, manufacture, installation and servicing of centrifugal pumps/pump sets and valves and contracts of pumping system on turnkey basis.
521119 **Wilo Mather and Platt Pumps Private Limited** **E 25, MIDC,** **Gokul Shirgaon Industrial Area** **Kolhapur 416234** **India**	Design, development, manufacture, installation and servicing of centrifugal pumps/pump sets and valves and contracts of pumping system on turnkey basis.
521116 **WILO Pumps Limited** **46 Mieumsandan 1-ro** **Gangseo-gu** **Busan 618-220** **South Korea**	Design, development, manufacture, sales and service of pumps and pump systems

3/12/18

Annex to Certificate
Registration No. 060313 QM08

WILO SE

Nortkirchenstraße 100
44263 Dortmund
Germany

Location	Scope
514915 **WILO Pompa Sistemleri A.Ş.** **Orhanli Mah.** **Mehmet Akif Ersoy Cad. No 91** **Tuzla** **34956 Istanbul** **Turkey**	Sales, Service of Pumps & Pump Systems and Development, Assembly of Pump Systems for Building Services, Water Management and Industry
501447 **WILO Pumpen Österreich GmbH** **WILO Straße 1** **2351 Wiener Neudorf** **Austria**	Sales and service of pumps and pump systems for Building Services, Water Management and Industry.
516442 **WILO nv** **Rusatiralaan 2** **1083 Ganshoren** **Belgium**	Sales and service of pumps and pump systems for Building Services, Water Management and Industry.
522451 **Wilo Polska Sp. z o.o.** **Jedności 5** **05-506 Lesznowola** **Poland**	Implementation to the market, sale and service of pumps, pump systems for heating, ventilation, air conditioning, water supply and sanitary engineering
518368 **WILO Nordic AB** **Isbjörnsvägen 6** **35245 Växjö** **Sweden**	Sales and service of pumps and pump systems for Building Services, Water Management and Industry.
525082 **WILO Magyarország Kft.** **Torbágy u. 14** **2045 Törökbálint** **Hungary**	Sales and service of pumps and pump systems for Building Services, Water Management and Industry.

This annex (edition: 2016-04-24) is only valid in connection with the above-mentioned certificate.

3 | 12418

Έργο: Ημερ/νία: 2017-09-06
Αριθμός Έργου: Συντάκτης:

wilo

Τεχνικά στοιχεία

Υποβρύχια αντλία λυμάτων Rexa PRO V05 DA-222 / EAD1X2-T0025-540-O

Αντλία							
Τύπος αντλίας		PROV05 D A - 222		Είδος εγκατάστασης		Suspension device DN50 DN50/2RK	
Πτερωτή (διάμ.)	Μέγ. Δυνατή	110	mm				
	Τυπικό (βασικό)	110	mm	Ελεύθερο πέρασμα		50	mm
	Σχεδιασμ.	110	mm	Στόμιο αναρ.	Βαθμ. PN	PN10	
	Ελάχ. Δυνατή	110	mm		Ονομ. διάμ.	DN50	
Ονομαστ. αριθμός στροφών		2900	1/min		Πρότυπο	WILO-S	
Συχνότητα		50	Hz	Στόμιο κατάθλ.	Βαθμ. PN	PN10	
Τύπος πτερωτής		Πτερωτή Vortex			Ονομ. διάμ.	DN50, Size 2, Rp2	
Κατασκευή πτερωτής		Ανοικτό			Πρότυπο	WILO-D	

Βάρη				
Βάρος υδραυλ. τμήματος αντλίας	Μέγ. 13,8	kg	Βάρος συγκροτήματος	Μέγ. 47,8 kg
Βάρος κινητήρα	34	kg		

Υλικά κατασκευής			
Κέλυφος αντλίας	EN-GJL-250		
Πτερωτή	EN-GJL-250		
Κέλυφος κινητήρα	EN-GJL-250		

Κινητήρας					
Ονομασία κινητήρα	P 13.1-10/EAD1X2-T-L01		Αριθμός πόλων	2	
Ονομ. ισχύς	2,5	kW	Ονομαστ. ταχύτ. Περιστροφής	2848	rpm
Απορρόφηση ισχύος σε Ονομ. ισχύ				3,2	kW
Ονομ. τάση				400 ~3	V
Απορρόφ. ρεύματος στην ονομ. ισχύ				5,5	A
Βαθμός απόδ. στην ονομ. ισχύ				78,6	%
συνφ στην Ονομ. ισχύ	0,84		Ονομ. συχνότητα	50	Hz
συνφ εκκίνησης	0,5		Είδος λειτουργίας: υγρή	S1	
Ρεύμα εκκίνησης DOL	31	A	Είδος λειτουργίας: ξηρή	S2 30, S3 25%	
Ρεύμα εκκίνησης Y/Δ	10,5	A	Μέγ. θερμοκρασία ρευστού	40	°C
Ροπή στρέψης εκκίνησης	21	Nm	Μέγ. αριθμ. ωριαίων εκκιν.	50	
Ροπή αδράνειας μάζας	0,0017	kg m²	Βαθμός προστασίας	IP 68	
Επιλεγμ. αντιεκρ. Προστασία	ATEX		Αριθμός Ex	BVS 11 ATEX E 119 X	
Σήμανση Ex	II 2G Ex db IIB T4 Gb				
Καλώδιο σύνδεσης κινητήρα			7G1,5 H07RN-F		

Στοιχεία σημείου λειτουργίας					
Παροχή	26,1	m³/h	Ρευστό μέσον	Νερό, καθαρό	
Μαν. ύψος	10,1	m	Τιμή NPSH της αντλίας		m
Ισχύς στον άξονα P_2	1,69	kW	Ταχύτητα περιστροφής	2915	rpm
Βαθμός απόδ. Αντλίας	42,5	%	Ολικός βαθμός απόδοσης	$= \frac{P_2 * \text{Βαθμός απόδ. Αντλίας}}{P_1}$	
Απορροφώμενη ισχύς P_1	2,2	kW			
Μέγ. παροχή	49,5 m³/h	Μαν. ύψος σε Μέγ. Παροχή	4,2 m	Μαν. ύψος σε μηδεν. παροχή	16,2 m
Σημείο βέλτ. Απόδ. Q (ΣΒΑ)	20,4	m³/h	Σημείο βέλτιστης απόδοσης H (ΣΒΑ)	11,7	m
Νο είδους	6064724				

3/12/18

Έργο: Ημερ/νία: 2017-09-06
Αριθμός Έργου: Συντάκτης:

wilo

Τεχνικά στοιχεία

Υποβρύχια αντλία λυμάτων Rexa PRO V05 DA-222 / EAD1X2-T0025-540-O

Τεχνική περιγραφή
Υποβρύχια αντλία λυμάτων, ως υποβρύχιο συγκρότημα με κινητήρα, για σταθερή, κατακόρυφη τοποθέτηση, για άντληση ανεπεξέργαστων, χημικά και μηχανικά μη διαβρωτικών για την αντλία, λυμάτων. Ακτινικά διατεταγμένο στόμιο κατάθλιψης και αξονική αναρρόφηση. Το συγκρότημα είναι κατασκευασμένο με τρόπο εύκολο για τη συντήρηση. Οι παροχές πρέπει να εξασφαλίζονται κατά ISO 9906 Παρ. Α.

3/12/18

Έργο:
Αριθμός Έργου:

Ημερ/νία: 2017-09-06
Συντάκτης:

wilo

Καμπύλες απόδοσης

Υποβρύχια αντλία λυμάτων

Rexa PRO V05 DA-222 / EAD1X2-T0025-540-O

Στοιχεία ισχύος σε σχέση με: Νερό, καθαρό [100%] ; 20°C; 998,19kg/m³; 0,0036014m³/h
Απόκλιση κατά ISO 9906 / Παράρτημα A.2

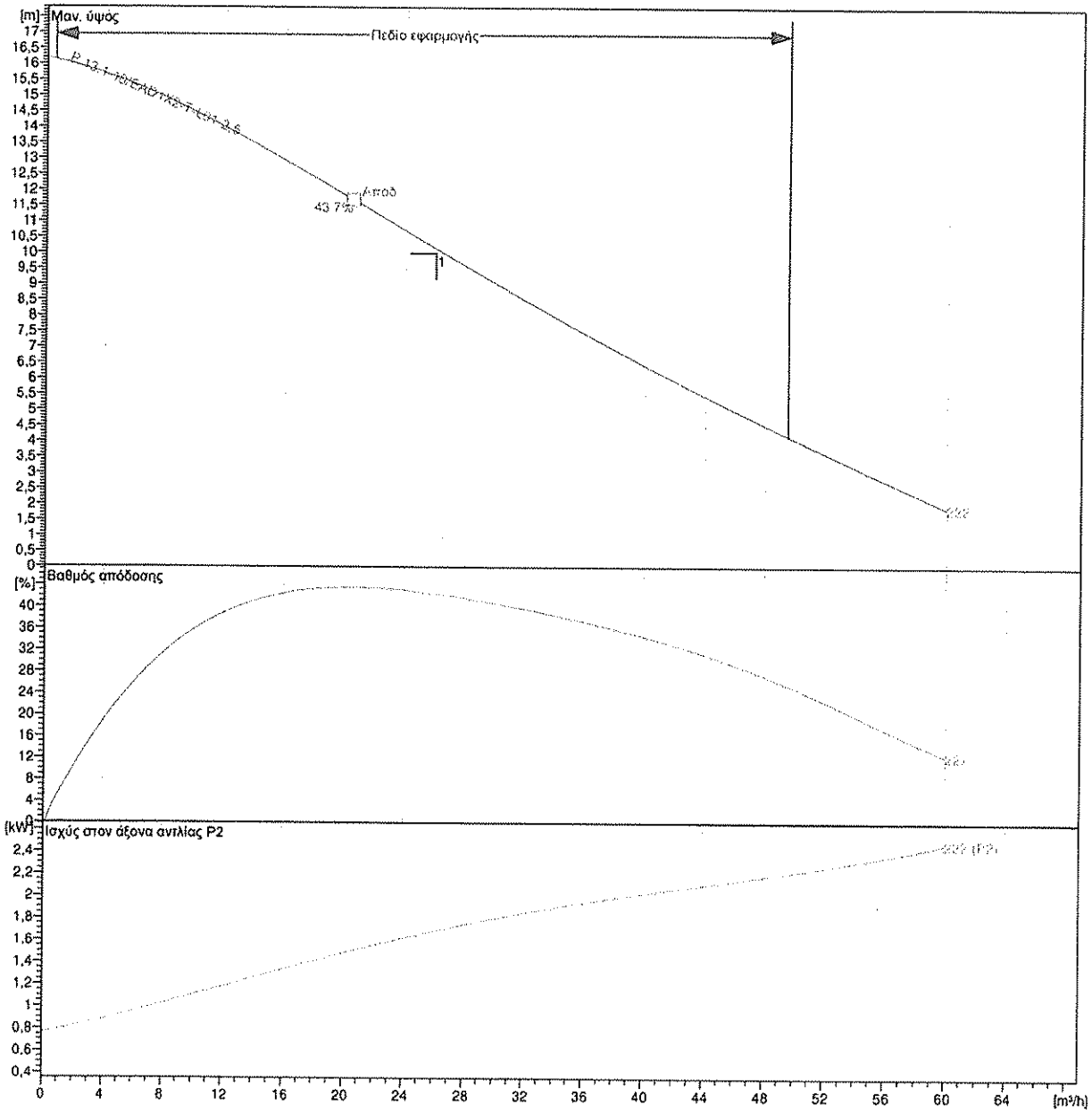

Αντλία			Στοιχεία σημείου λειτουργίας		
Πτερωτή (διάμ.) Σχεδιασμ.	110	mm	Παροχή	26,1	m³/h
Ονομαστικός αριθμός στροφών	2900	rpm	Μαν. ύψος	10,1	m
Συχνότητα	50	Hz	Ισχύς στον άξονα P_2	1,69	kW
Τύπος πτερωτής	Πτερωτή Vortex		Βαθμός απόδ. Αντλίας	42,5	%
Κινητήρας			Απορροφώμενη ισχύς P_1	2,2	kW
Ονομ. ισχύς	2,5	kW	Τιμή NPSH της αντλίας		m
Επιλεγμ. αντιεκρ. Προστασία	ATEX		Ταχύτητα περιστροφής	2915	rpm

3/12/18

Έργο: Ημερ/νία: 2017-09-06
Αριθμός Έργου: Συντάκτης:

wilo

Τεχνικά στοιχεία

Υποβρύχια αντλία λυμάτων Rexa PRO V05 DA-222 / EAD1X2-T0025-540-O

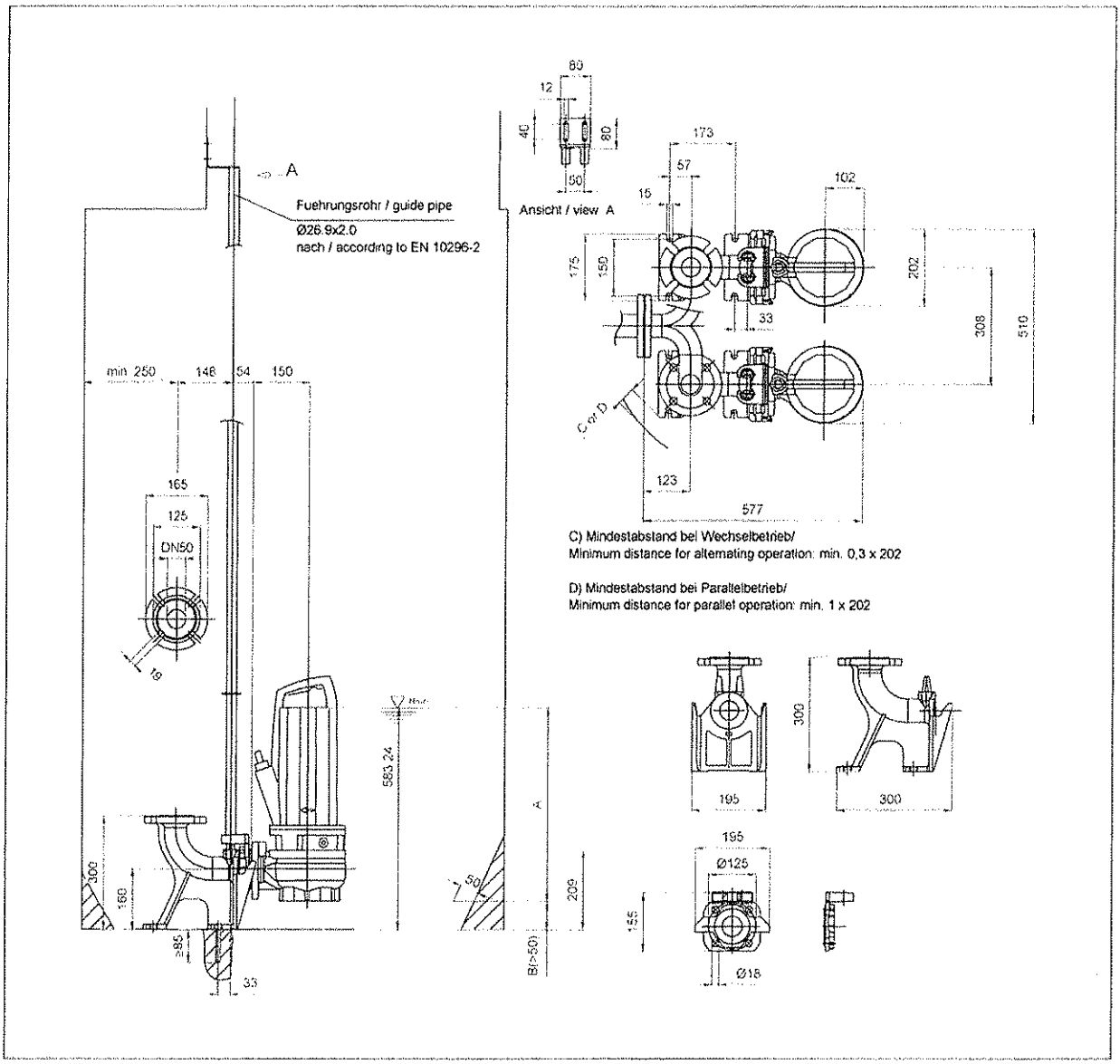

Διαστάσεις σε mm				Συνδέσεις
B	65			Στόμιο αναρ. DN50 PN10
				Στόμιο κατάθλ. DN50, Size 2, Rp2, cutoff PN10
				Suspension device DN50 DN50/2RK

3/12/18

Έργο:
Αριθμός Έργου:

Ημερ/νία: 2017-09-06
Συντάκτης:

wilo

Στοιχεία κινητήρα

P 13.1-10/EAD1X2-T-L01-2,5 2,5 kW 400 V 50Hz 3~

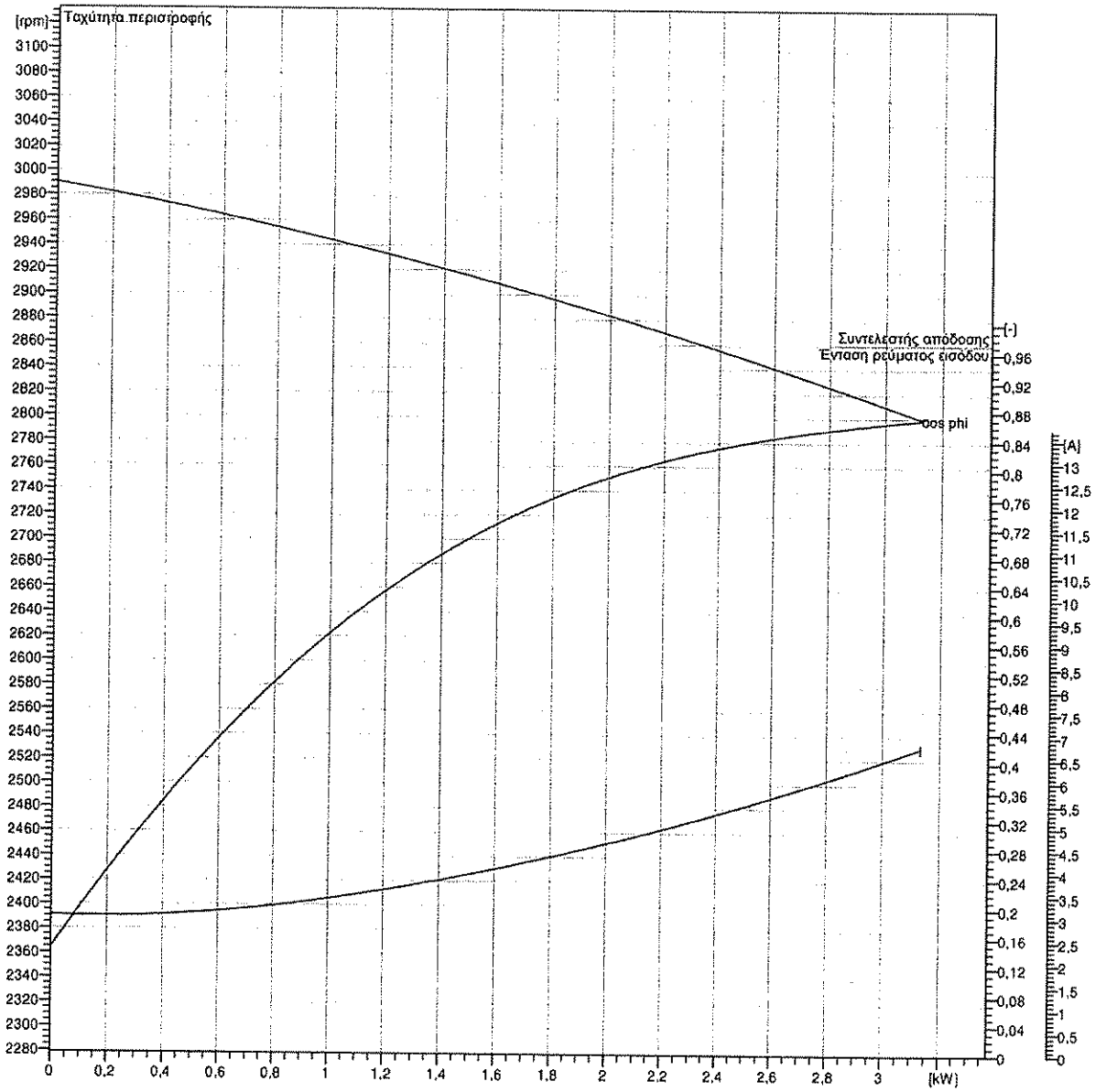

Στοιχεία εφαρμογής			Στοιχεία κινητήρα		
Είδος υποβρύχιας λειτουργίας	S1		Απορρόφηση ισχύος σε Ονομ. ισχύ	3,2	kW
Είδος λειτουργίας: ξηρή	S2 30, S3 25%		Ονομ. ισχύς	2,5	kW
Συντελεστής Service	1		Ονομαστ. ταχύτ. Περιστροφής	2848	rpm
Μέγ. θερμοκρασία ρευστού	40	°C	Απορρόφ. ρεύματος στην ονομ. ισχύ	5,5	A
Αντιεκρηκτική προστασία			Μέγ. αριθμ. ωριαίων εκκιν.	50	
Επιλεγμ. αντιεκρ. Προστασία	ATEX		Βάρος κινητήρα	34	kg
Αριθμός Ex	BVS 11 ATEX E 119 X		Βαθμός απόδ. στην ονομ. ισχύ	78,6	%
Σήμανση Ex	II 2G Ex db IIB T4 Gb		συνφ στην Ονομ. ισχύ	0,84	
Καλώδιο σύνδεσης κινητήρα			Ρεύμα εκκίνησης DOL	31	A
Καλώδιο σύνδ. κινητ.για εκκίνηση DOL	7G1,5 H07RN-F		συνφ εκκίνησης	0,5	
Καλώδιο σύνδ. κινητ. για εκκίνηση Y/Δ			Ροπή στρέψης εκκίνησης	21	Nm
Μέγ. δυνατό καλ. σύνδ. Κινητήρα	7x1,5	mm²	Ροπή αδράνειας μάζας	0,0017	kg m²

3/12/18

5.7 CHEMICAL PHOSPHORUS PRECIPITATION

3/12/18

Alson A.E.

Company name: ALSON SA
Created by:
Phone: 2102855878
Email: info@alson.gr
Date: 05/09/2017

Position	Qty.	Description
	1	**DDA 30-4**

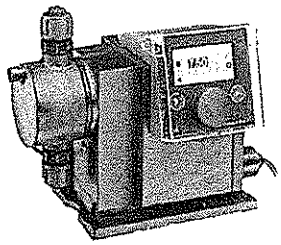

Note! Product picture may differ from actual product

Product No.: 97722256
DDA 30-4 AR-PVC/V/C-F-31U2U2FG

The SMART Digital DDA is a compact positive displacement, diaphragm dosing pump with variable-speed drive (stepper motor) and intelligent control electronics with minimum energy consumption. The SMART Digital Dosing series operates at full stroke length to ensure optimum accuracy, priming and suction, even for high-viscosity or degassing liquids. The duration of each discharge stroke varies according to the capacity set, resulting in optimum smooth and continuous discharge flow.

The click-stop mounting plate allows installation in three different positions without using any additional accessories. The control cube can be turned easily into front, left or right position. The click wheel and the multi-coloured backlit graphical, plain-text LC display make commissioning and operation intuitive. The control elements are protected by a transparent cover.

The dosing head is composed of:
- Long lifetime and universal, chemically resistant full-PTFE diaphragm.
- Double ball valves for highest dosing accuracy.
- Deaeration valve for easy start-up.

Operation modes:
- Manual dosing in ml/h, l/h or gph.
- Pulse control in ml/pulse (incl. memory function).
- Analog control 0/4-20 mA (scalable).
- Pulse-based batch function in ml, l or gal.
- Timer-based batch function (Dosing timer, cycle or week).
- Fieldbus control (Genibus prepared for ProfibusDP E-box).

Other features:
- Auto deaeration during pump standby to avoid breakdowns due to air-locking.
- Two SlowMode steps (anti-cavitation), 50 % (maximum flow: 15 l/h) and 25 % (maximum flow: 7.5 l/h), e.g. for high-viscosity or degassing liquids.
- Service information display to show when service and which wear-part order number is required.
- Two-step key lock function to protect the pump against unauthorised access.
- Additional display function to provide further information, e.g. the actual mA input signal.
- Counter for total dosed volume (resettable), operating hours, etc.
- Save and load customised settings as well as reload of factory settings.

Signal inputs/outputs:
- Input for pulse, analog 0/4-20mA, external stop.
- Input for low-level and empty-tank signal.
- Two potential-free output relays for max. 30 V AC/DC (configurable, e.g. alarm, stroke signal, pump dosing, timer etc.)
- Output analog 0/4-20mA.
- Fieldbus communication interface (GeniBus, also for additional Profibus DP E-box to retrofit).

Technical:

Type key:	DDA 30-4 AR-PVC/V/C-F-31U2U2FG
Max. Flow:	30 l/h
Max. flow in slow mode 50%:	15 l/h
Max. flow in slow mode 25%:	7.5 l/h
Min flow:	30,0 ml/h
Turn-down ratio:	1:1000
Approvals on nameplate:	CE,CSA-US,NSF61,EAC,RCM
Valve type:	Standard

3/12/18

Alson A.E.

Company name: ALSON SA
Created by:
Phone: 2102855878
Email: info@alson.gr
Date: 05/09/2017

Position	Qty.	Description

Maximum viscosity at 100 %: 150 mPas
Maximum viscosity in slow mode 50 %: 600 mPas
Maximum viscosity in slow mode 25 %: 1500 mPas
Accuracy of repeatability: 1 %

Materials:

Dosing head:	PVC (Polyvinyl chloride)
Valve ball:	Ceramic
Gasket:	FKM

Installation:

Range of ambient temperature:	0 .. 45 °C
Maximum operating pressure:	4 bar
Installation set:	NO
Installation type:	No installation set
Pump inlet:	4/6, 6/9, 6/12, 9/12 mm
Pump outlet:	4/6, 6/9, 6/12, 9/12 mm
Max. Suction lift during operation:	6 m
Max. Suction lift during priming:	2 m

Liquid:

Pumped liquid:	Water
Liquid temperature range:	-10 .. 45 °C
Liquid temperature during operation:	20 °C
Density:	998.2 kg/m³

Electrical data:

Maximum power input - P1:	24 W
Mains frequency:	50 Hz
Rated voltage:	1 x 100-240 V
Enclosure class (IEC 34-5):	IP65 / NEMA 4X
Length of cable:	1.5 m
Type of cable plug:	EU
Inrush current:	25A at 230V for 2ms

Controls:

Control variant:	AR
Level control:	YES
Analog input:	0/4-20 MA
Pulse control:	YES
Ext. Stop input:	YES
Analog output:	0/4-20 MA
Output relays:	2
Bus communication:	YES

Others:

Net weight:	3 kg
Gross weight:	4 kg
Color:	GREEN

3/72/18

Certificate DE13/81841218

The management system of

Grundfos Management A/S

Poul Due Jensens Vej 7
8850 Bjerringbro
Denmark

has been assessed and certified as meeting the requirements of

ISO 9001:2008

For the following activities

Development, manufacturing, service, repair, sales and distribution of components, pumps, electrical motors, pump systems, equipment and services in connection with movement of liquids.

This certificate is valid from 15 February 2015 until 14 February 2018 and remains valid subject to satisfactory surveillance audits.
Re certification audit due before 31 December 2017
Issue 5. Certified since 17 June 2011

This is a multi-site certification.
Additional site details are listed on subsequent pages.

Authorised by

SGS United Kingdom Ltd Systems & Services Certification
Rossmore Business Park Ellesmere Port Cheshire CH65 3EN UK
t +44 (0)151 350-6666 f +44 (0)151 350-6600 www.sgs.com

SGS 9001-8 01 0311 M2

This document is issued by the Company subject to its General Conditions of Certification Services accessible at www.sgs.com/terms_and_conditions.htm Attention is drawn to the limitations of liability, indemnification and jurisdictional issues established therein. The authenticity of this document may be verified at http://www.sgs.com/clients/certified_clients.htm. Any unauthorized alteration, forgery or falsification of the content or appearance of this document is unlawful and offenders may be prosecuted to the fullest extent of the law.

3/12/18

Grundfos Management A/S

ISO 9001:2008

Issue 5

Detailed scope

Development, manufacturing, service, repair, sales and distribution of components, pumps, electrical motors, pump systems, equipment and services in connection with movement of liquids.

Additional facilities

Production sites

Certificate No. and Issue Date	Country)	Company Name and Address
DE13/81841218.01 15/02/2015	**Denmark**	**Grundfos A/S** Poul Due Jensens Vej 7 8850 Bjerringbro
DE13/81841218.02 15/02/2015	**Finland**	**Grundfos Environment Finland Oy** Kaivokselantie 3 - 5 01610 Vantaa
DE13/81841218.03 15/02/2015	**France**	**Pompes Grundfos S.A.** Route de Faulquemont 57740 Longeville-Les-Saint Avold
DE13/81841218.04 15/02/2015	**England**	**Grundfos Manufacturing Ltd.** Ferryboat Lane Castletown, Sunderland, SR5 3JL
DE13/81841218.05 15/02/2015	**USA**	**Grundfos Pumps Manufacturing Corporation** 5900 E. Shields Avenue 93727 Fresno
DE13/81841218.06 15/02/2015	**P. R. China**	**Grundfos Pumps (Suzhou) Ltd.** Qingqiu Road 72 Suzhou, Jiangsu 215126 P.R.China

UKAS MANAGEMENT SYSTEMS
005

This document is issued by the Company subject to its General Conditions of Certification Services accessible at www.sgs.com/terms_and_conditions.htm Attention is drawn to the limitations of liability, indemnification and jurisdictional issues established therein. The authenticity of this document may be verified at http://www.sgs.com/clients/certified_clients.htm Any unauthorized alteration, forgery or falsification of the content or appearance of this document is unlawful and offenders may be prosecuted to the fullest extent of the law

3/12/18

Certificate No. and Issue Date	(Country)	Company Name and Address
DE13/81841218.07 15/02/2015	Germany	**Grundfos Pumpenfabrik GmbH** Willy Pelz Strasse 1-5 23812 Wahlstedt
DE13/81841218.08 15/02/2015	Germany	**Grundfos Water Treatment GmbH** Reetzstrasse 85 76327 Pfinztal
DE13/81841218.09 15/02/2015	Hungary	**Grundfos Hungary Manufacturing Ltd.** Búzavirág u. 14 2800 Tatabánya
DE13/81841218.10 15/02/2015	Russia	**Grundfos Istra OOO** Leshkovo N 188 Istra Area 143581 Moscow region
DE13/81841218.11 15/02/2015	Taiwan	**Grundfos Handels AG Taiwan Branch** 14, Minyou Road Tongluo Township 36646, R.O.C. Miaoli County
DE13/81841218.12 15/02/2015	Serbia	**Grundfos Srbija d.o.o (Manufacturing)** Obilazni put - Sever 21 22320 Indjija
DE13/81841218.20 15/02/2015	Mexico	**Bombas GRUNDFOS de Mexico Manufacturing S.A. de C.V.** Circuito Exportación 272, Parque Industrial Tres Naciones 2da Etapa 78395 San Luis Potosí, S.L.P

Development and Research Sites

DE13/81841218.13 15/02/2015	Denmark	**Grundfos Management A/S** Poul Due Jensens Vej 7 8850 Bjerringbro
DE13/81841218.14 15/02/2015	Germany	**Grundfos Water Treatment GmbH** Reetzstrasse 85 76327 Pfinztal

UKAS MANAGEMENT SYSTEMS 005

This document is issued by the Company subject to its General Conditions of Certification Services accessible at www.sgs.com/terms_and_conditions.htm Attention is drawn to the limitations of liability, indemnification and jurisdictional issues established therein The authenticity of this document may be verified at http://www.sgs.com/clients/certified_clients.htm Any unauthorized alteration, forgery or falsification of the content or appearance of this document is unlawful and offenders may be prosecuted to the fullest extent of the law

3/12/18

Sales and service companies

DE13/81841218.15 15/02/2015	Denmark	**Grundfos A/S** Martin Bachs Vej 3 8850 Bjerringbro
DE13/81841218.16 15/02/2015	England	**Grundfos Pumps Ltd** Grovebury Road Leighton Buzzard Bedfordshire LU7 4TL
DE13/81841218.17 15/02/2015	England	**Grundfos Service Limited** Beswick House Greenfold Way, Leigh Lancashire WN7 3XJ
DE13/81841218.18 15/02/2015	England	**Grundfos Watermill Limited** Gemini House Enterprise Way Edenbridge Kent TN8 6HF
DE13/81841218.19 15/02/2015	Ireland	**Grundfos (Ireland) Limited** Unit A, Merrywell Business Park Ballymount Road Lower, Dublin 12
DE13/81841218.21 15/02/2015	Thailand	**GRUNDFOS (Thailand) Limited** 92 Chaloem Phrakiat Rama 9 Road Dokmai, Pravej Bangkok 10250
DE13/81841218.22 15/02/2015	Argentina	**Bombas Grundfos de Argentina S.A.** Ruta Panamericana ramal Campana Km. 37,500 Centro Industrial Garin, Esquina Haendel y Mozart 1619 Pcia. Buenos Aires
DE13/81841218.23 15/02/2015	South Africa	**Grundfos (PTY) Ltd** 16 Lascelles Road, Meadowbrook Germiston. 1609 P.O. Box 1456 2008 Bedfordview

UKAS MANAGEMENT SYSTEMS
005

This document is issued by the Company subject to its General Conditions of Certification Services accessible at www.sgs.com/terms_and_conditions.htm Attention is drawn to the limitations of liability, indemnification and jurisdictional issues established therein. The authenticity of this document may be verified at http://www.sgs.com/clients/certified_clients.htm. Any unauthorized alteration, forgery or falsification of the content or appearance of this document is unlawful and offenders may be prosecuted to the fullest extent of the law.

3/12118

CM MAG-P

HORIZONTAL, SEALLESS PP AND PVDF CENTRIFUGAL PUMP WITH PERMANENT MAGNET DRIVE SYSTEM, NO MECHANICAL SEAL

M PUMPS

Outline drawings

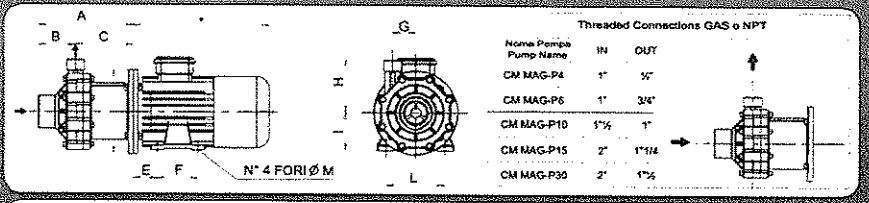

Threaded Connections GAS o NPT

Nome Pompa / Pump Name	IN	OUT
CM MAG-P4	1"	½"
CM MAG-P6	1"	3/4"
CM MAG-P10	1"½	1"
CM MAG-P15	2"	1"1/4
CM MAG-P30	2"	1"½

Pump Name	GR.	A	B	C	D	E	F	G	H	I	L	M
CM MAG-P4	56	114	38.5	75.5	120	36	71	34	80	56	90	5.8
CM MAG-P6	63	143	58	84	140	40	80	46	91	63	100	7
CM MAG-P10	71	180	70.8	109.5	160	45	90	44	100	71	112	7
CM MAG-P15	80	231	81	150	200	50	100	62.5	125	80	125	9.5
CM MAG-P30	90	278	91	187	200	56	100	66.5	140	90	140	10
CM MAG-P36	100/112	298	91	205	250	63	140	66.5	140	100	160	12

Performance curves

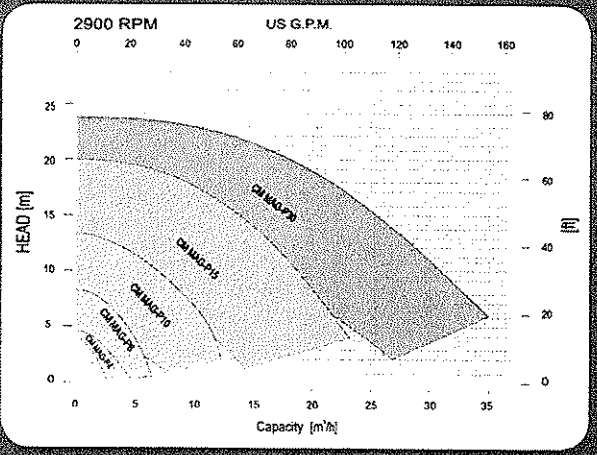

Pump construction and Operative Limits

Close-coupled drivers are conventional drivers mounted directly to pumps frame. No base, coupling or guards are required for this mounting style.

- Connections: Threaded BSP (GAS) & NPT
- Max viscosity: 200 cSt
- Max system pressure: 5 bar
- Flow up: to 35mc/h
- Head up: to 23 m
- Temperature range: from 24 °F (-5 °C) to +194 °F (+90 °C)
- Electric motors from 1,5Kw up to 5kW

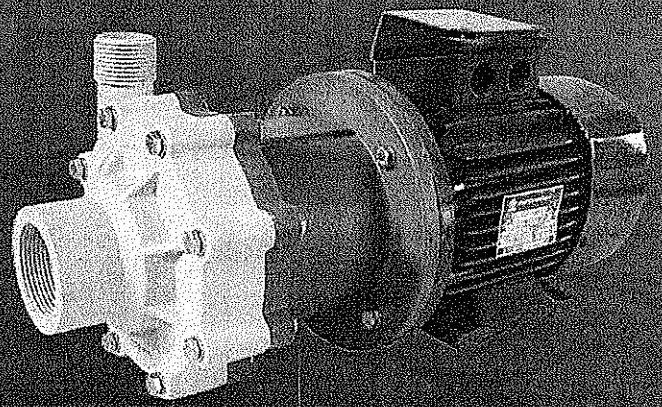

CM MAG-P Series

The separation of liquid chamber/atmosphere by means of an isolation shell is the best solution to pump aggressive chemical, high purity liquids and liquids difficult to seal.

Hermetic sealless injection moulded thermoplastic pumps are the best solution for light duty applications.

A wide range of pumps covers the different performances.

Manufactured by:

M PUMPS

A unit of Mischiatti GROUP

M PUMPS s.r.l. - Via dell'Artigianato, 120
45015 Corbola (Ro) - Italy - www.mpumps.it
Tel. +39 0426 346304 - Fax +39 0426 349126

For more information please contact:

Printed on 06-06-2012

PUMP DETAILS

Making a comparison between this range of pumps and the other two M PUMPS series C MAG-P and C MAG-PL, the correct definition becomes few components (extremely easy maintenance), competitive prices, guaranteed chemical compatibility.

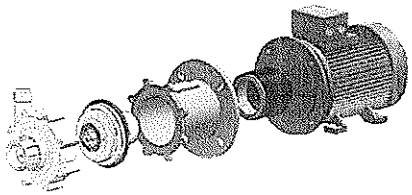

Pump casing shall be one single piece, injection moulded designs, made of GFR PP and CFR PVDF.

RWP QUICK CHANGE CARTRIDGE KIT
to guarantee an easy and fast maintenance, materials PP and PVDF.

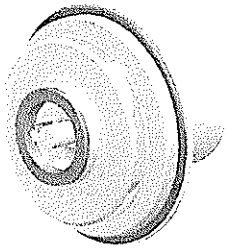

The sealing system with O-Rings prevents from leaking in the atmosphere – different materials available:

- EPDM
- VITON"

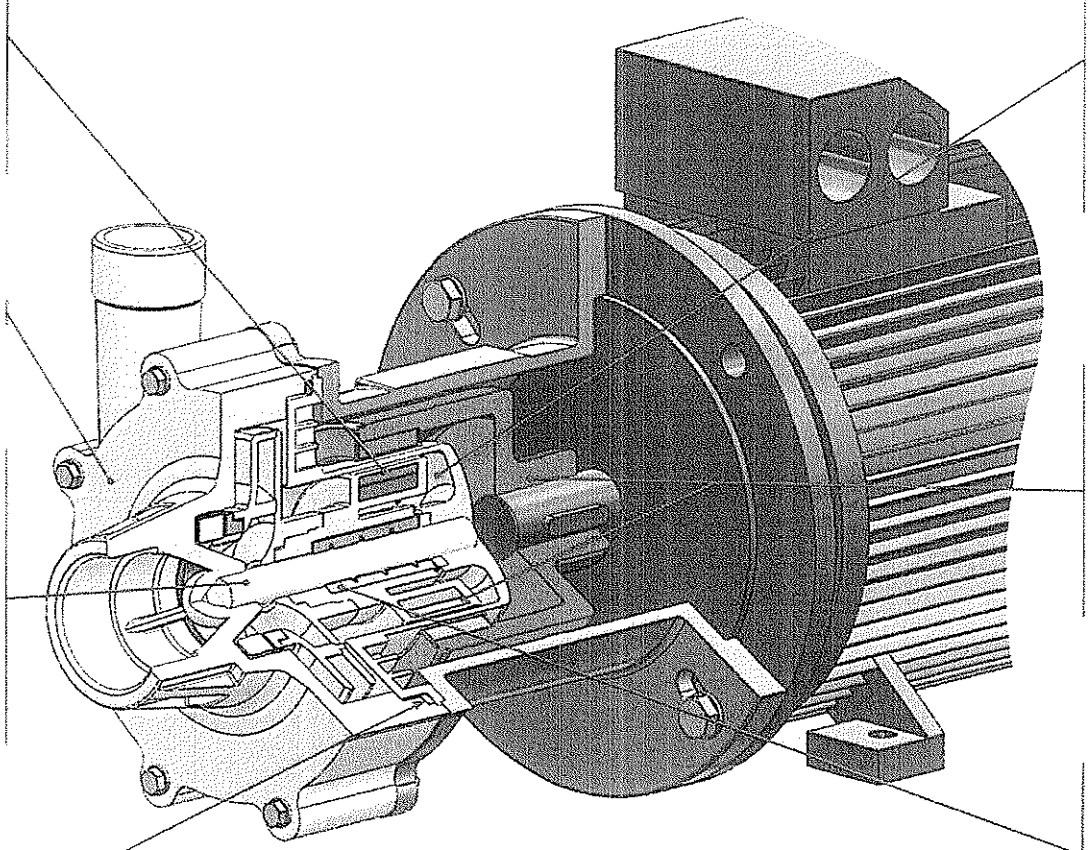

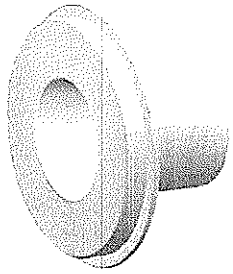

The rear shell is made of thermoplastic materials, ellipsoidal profile, zero magnetic losses. GFR PP or CFR PVDF materials.

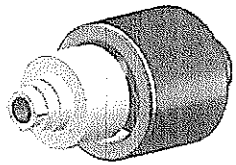

High power synchronous magnetic coupling designed by our Technical Office and with magnetic elements mechanically locked.

Rare earth guarantee the magnetic-balancing to avoid the thrust bearings wear and the heat generation.

Field assembling of the product lubricated bearing arrangement does not require special tools.
The Shaft / Bearing materials are available in two different configurations to provide the best solution for each application:

- PTFEC – ALLUMINA 99,7% (standard)
- CARBON – ALLUMINA 99,7%

Pump performance data		
MODEL: CM MAG-P15	Curve N°: 10017	Rev.:01
ITEM:	Power [kW]: ---	
Project:	2900 RPM	

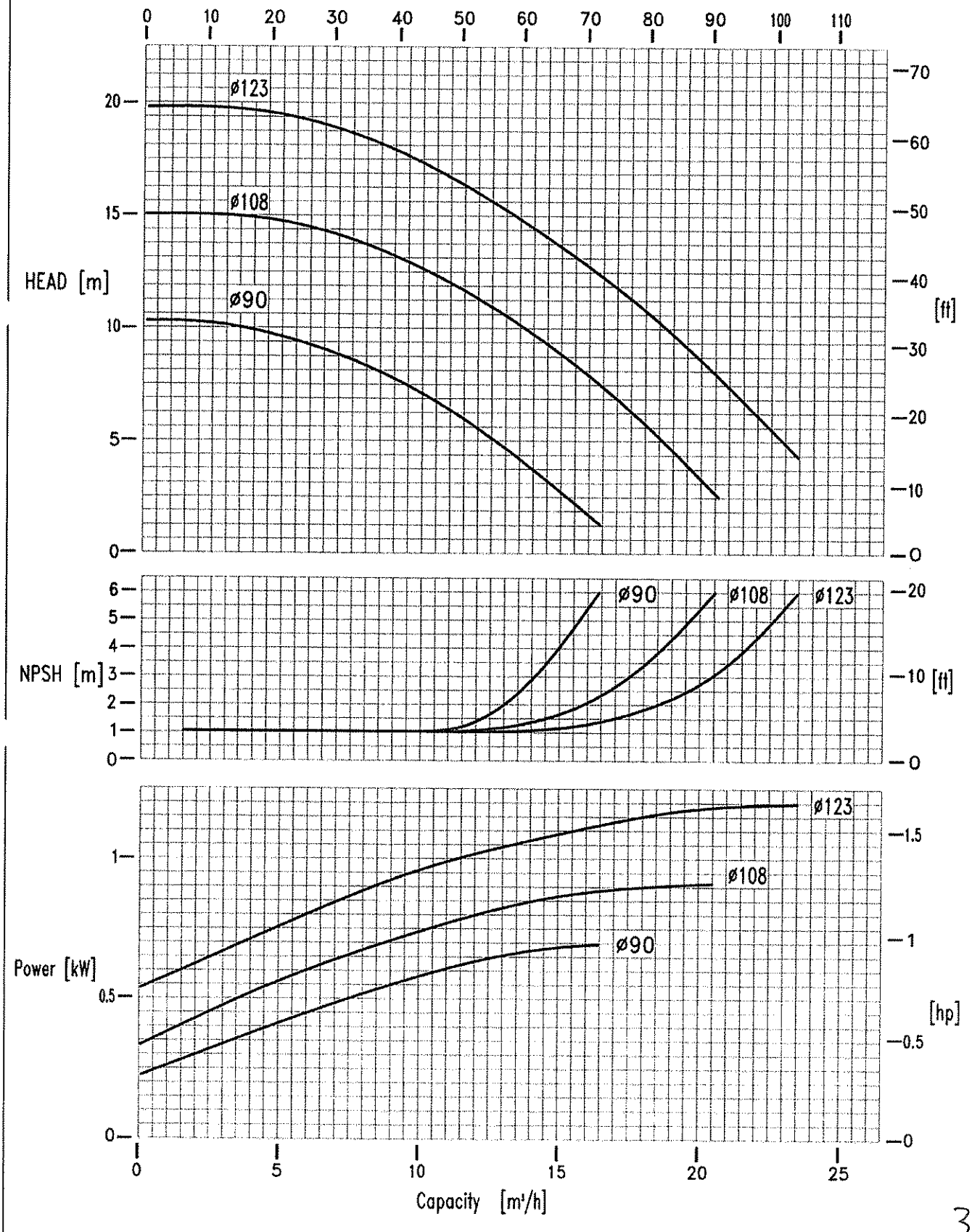

3/12/18

6. FILTRATION UNIT

3/12/18

MICROSCREEN DRUM FILTER

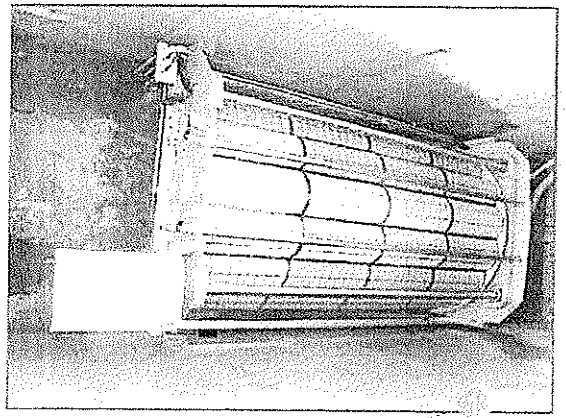

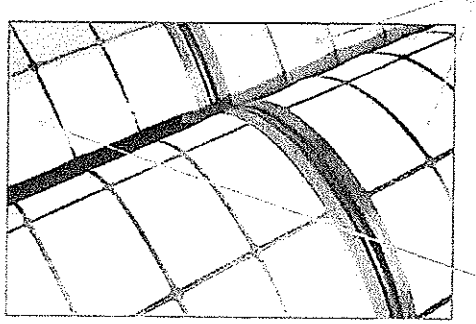

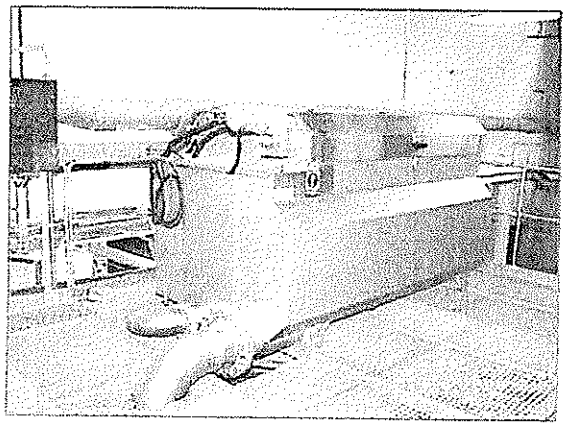

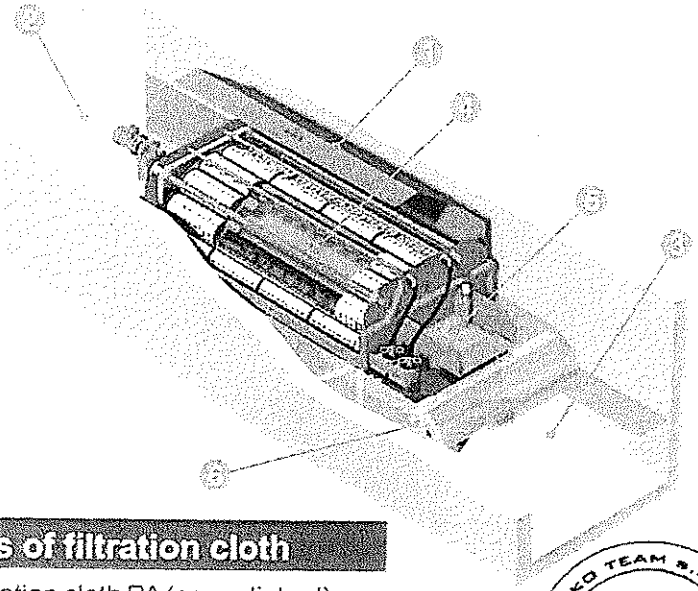

Types of filtration cloth

1. Filtration cloth PA (cross-linked)
2. Stainless steel filter cloth

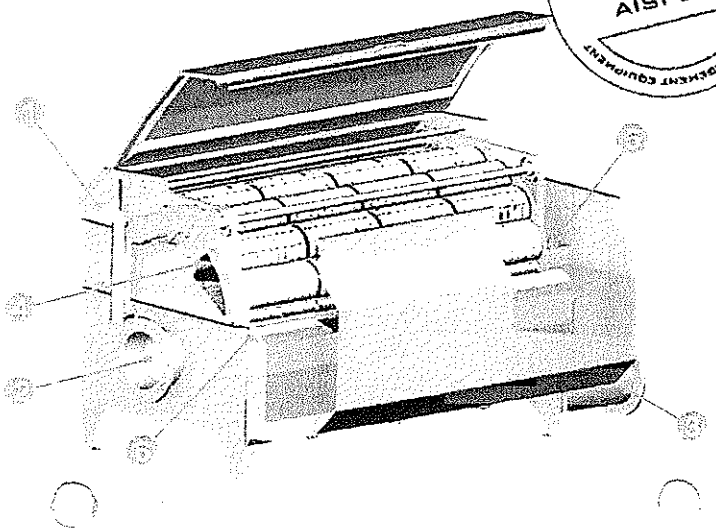

IN-EKO TEAM s.r.o. AISI 304 AISI 316 WATER MANAGEMENT EQUIPMENT

Microscreen Drum Filter – version for concrete channels

The Microscreen Drum Filter is simply fitted, and bolted to a prepared concrete channel. The sizes of the concrete channel depend on the filter size. The concrete channel must be equipped by an crest.

1. Microscreen drum filter
2. Inlet
3. Outlet
4. Sludge manger
5. Sludge tank
6. Crest

Microscreen Drum Filter – version for the steel tank

The Microscreen Drum Filter in the steel tank is a compact unit which is mounted on flanges. The sizes of the filter and the flange depend on the filter size.

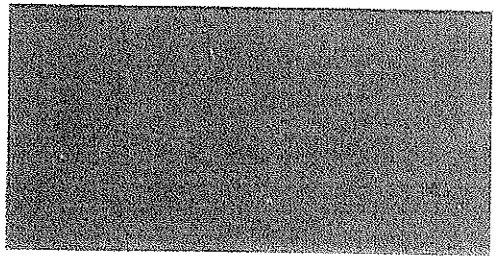

MICROSCREEN DRUM FILTER

IN-EKO TEAM

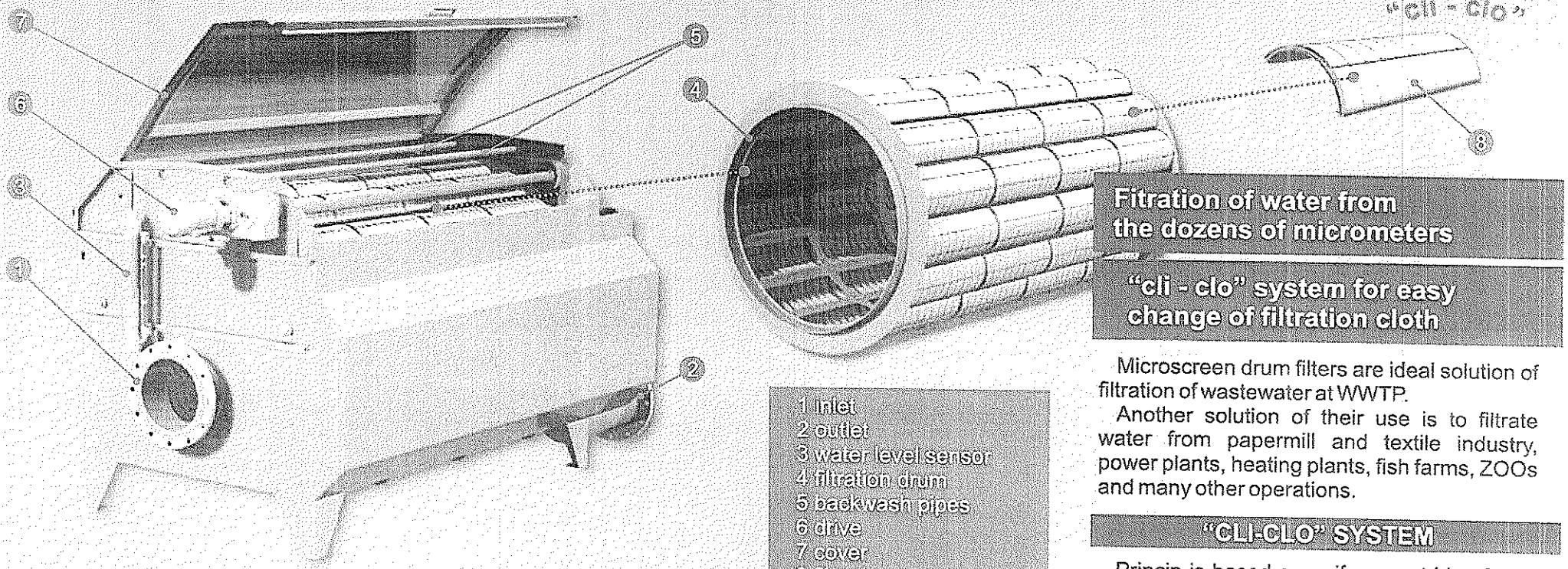

Fitration of water from the dozens of micrometers

"cli - clo" system for easy change of filtration cloth

Microscreen drum filters are ideal solution of filtration of wastewater at WWTP.

Another solution of their use is to filtrate water from papermill and textile industry, power plants, heating plants, fish farms, ZOOs and many other operations.

"CLI-CLO" SYSTEM

Princip is based on uniform cartridge for all the filter sizes.

Montage of filtration cartridge is done very quickly with no need of fixing elemnts neither the tools.

- designed for concrete channels or stainless steel tanks
- removing of SS, COD, BOD5 from the wastewater
- its own emergency overflow
- already filtrered water is used for backwash of filtration cloth
- made of stainless steel

type	filtration area [m2]	No. of cartridges	max. flow [l/s]*
1FB	0,728	7	10
2FB	1,872	18	25
3FB	3,744	36	50
4FB	6,240	60	80
5FB	9,360	90	120
6FB	13,104	126	200

*stated capacities to be considered only as informational

IN - EKO TEAM s.r.o.
Trnec 1734, Tišnov 666 03
Czech Republic
tel.: +420 549 415 234
fax: +420 549 412 383
e-mail: sales@in-eko.cz
e-mail: info@in-eko.cz
www.in-eko.com

CzWA
The Czech Water Association

IN-EKO
TEAM

MICROSCREEN DRUM FILTER

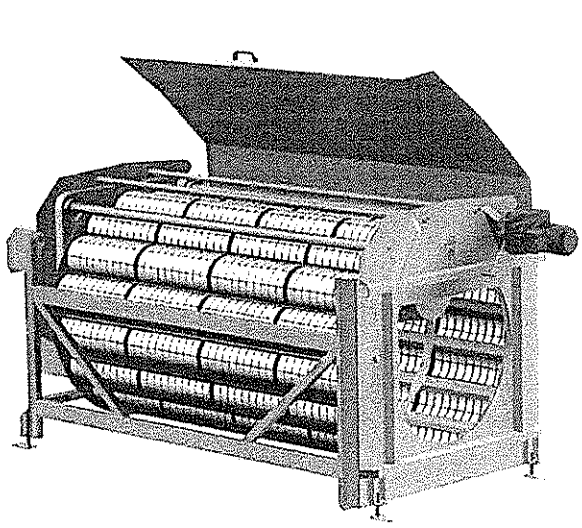

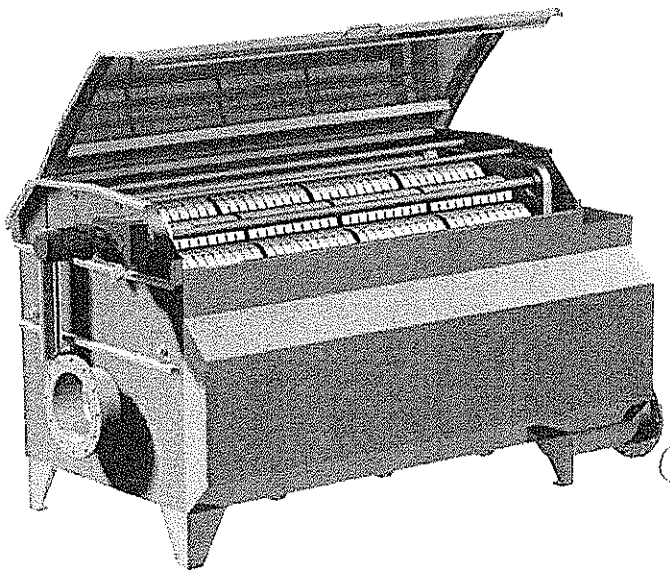

...information for designers...

verze 18072011

31/12/18

TABLE OF CONTENTS

TABLE OF CONTENTS 2
Microscreen drum filter 3
1. Installation into the concrete channel 4
2. Installation into the steel tank 5
Installation of the filter 5
Type designation 6
Innovation of the filter drum 7
FBB 9
Working platform: 16
FBO 17
Dimension chart of steel filters 20
Dimension chart of steel filters 23
Connecting sizes for filter inlet and outlet in the steel tank: 23
Standard switchboards: 25
Contacts 26

3/12/18

Microscreen drum filter

Use

Microscreen drum filters of FB type are suitable for tertiary treatment, mainly for removal of undissolved matter in municipal and industrial waste water treatment plants. Further it is used in fish farms, food processing and paper manufacturing plants and for recycling of cooling water in power plants. In some cases filters can be used for recovery of rare substances.

Operation

Water containing solid particles flows through the inlet pipe (sewer) into the interior part of the filter drum. Impurities are caught on the inner side of the filter cloth and the filtered water flows through the cloth out. The entire filter remains off during this process. As the filter cloth slowly becomes clogged by the increasing amount of filtered debris, its resistance to the flow increases and the water level inside the filter drum rises. When the preset difference between the levels inside and outside of the filter drum is reached, the water level sensor positioned at the front of the filter, is automatically activated. Simultaneously the drum drive and the backwash pump/-s which pumps the filtered water into the jet rinse system are activated. The debris accumulated on the inner side of the filter cloth is removed by the directed jet stream of water from the nozzles and then washed into the waste trough positioned in the inner drum. The debris is then washed into the sludge tank where it is washed out by the sludge pump. This pump is automatically controlled by the level sensors located on the wall of the sludge tank. If there is a gravitational discharge pipe, the sludge pump is not necessary.

After the rinsing process is finished, hydrostatic pressure drops. The rinsed cloth is moved to the bottom of the filter by the rotation of the drum, the difference in levels inside and outside the drum diminishes and the sensor automatically switches off the drum rotation and the pump. The rotating drum and the pump remain off until reactivated. This operation mode repeats in cycles. The ratio of the rest cycle and the rotation cycle depends on the amount of detritus flowing into the filter, its character and the condition of the filter cloth.

As the flow of untreated water remains uninterrupted throughout the entire filtration process, and the flow of the rinse water is taken directly from the filter, no additional backwash trays or sludge trays are needed. This significantly reduces investment costs.

The automatic activation and deactivation of the filter reduces the amount of electricity needed for the operation of the filter. It also improves the average quality of the water filtered (creation of auxiliary filtering layer), increases the density of the effluent sludge and prolongs the life of the entire system.

Right choice

The basic parameter of the filtering capacity of the filter is the effective area of the filter cloth which is given by the selected filter size. The second parameter is the size of pores in the filter cloth and the third is its free functional area. Filtering capacity is also considerably influenced by the **character of filtered solids,** such as shape of filtered solids (flat particles clog pores more easily than round ones), mechanical strength (cohesive particles are easier to filter than non-cohesive, mucous ones) and the proportion of small and big particles in the total volume of influent water. At a certain quantity of cohesive particles bigger than the pores in the filter cloth, a thin layer of sludge is formed – secondary filter layer, capable of catching particles which are considerably smaller than the size of pores in the filter cloth. Therefore it is advisable to select a filter with a bigger filter area so the idle time of the filter is long enough to create a secondary filter layer on the inside part of the filter cloth. This layer is washed away into the waste trough during backwash of the filter cloth.

3172178

All the above mentioned criteria, which normally are not constant, influence the immediate filtering capacity of the filter.

Filter cloth with the pore size of 0.04mm have proved to work well for microscreen filters used for tertiary treatment in municipal and industrial waste water treatment plants. In the case of big pollution of waste water or in the case of special usage, the size of the filter and parameters of the filter cloth must be selected based on the experience with filtration in the similar conditions or by a filter test.

In any case it is recommended to consult the type of filter to be used with IN-EKO representative and to know **the average amount of undissolved matter** in water which is to be filtered, proposed **average flow** through the filter and estimated **maximum flow** through the filter.

Filters are manufactured in several versions to satisfy possible requirements of the designers:

1. Installation into the concrete channel

The base is a concrete channel of accurate dimensions according to the design drawing, with an overflow edge. There is also a service area and a by-pass channel.

The overflow edge is not part of the delivery and must be absolutely waterproof!

There must be no reinforcing or other bearing partitions in the channel for the filter e.g. for gratings and they must not, in any way, narrow the channel.

The cover of the channel and service tank must be insulated and made of solid material to prevent it from freezing. The filter can be supplied with an insulated cover, it is used in cases when it is not possible to insulate the channel or when the filter reaches over the channel. This way the cover is protected against freezing and there is no danger of rupture of the filter cloth by ice.

Service area:

- The main advantage of the drum innovation is that it is not necessary to remove the filter from the channel (there is "cli-clo" system) when changing the filter cloth (filter sections). The service area provides good access to the filter.
- Regular check of the filter (checking the function of the level sensors, sludge pump, drive, etc.) can be easily performed from the service area.
- The sizes of the service tank are given in the design drawings. Normally the service area should be at least 700mm wide, and the height of the edge between the filter and the service area should be 1,100mm.

By-pass channel:

- The filter itself has only an auxiliary bypass!
- The basic function of this channel is cheaper and faster service of the filter.
- In the case of excessive flow or breakdown of the filter, water level in front of the filter rises quickly. This is signalled by water level sensors. For the lifespan of the filter it is not good for the drum to rotate with such quantity of water. It is, therefore, necessary to avoid water flow to the filter and to use a bypass facility.
- The bypass channel can be shut in two possible ways:
    - *Passive:* overflow edge
    - *Active:* manual or electrically controlled sluice gate which opens if there is an overflow or breakdown.
- It must be designed in such a way to have enough capacity to manage full bypass of the filter (battery). If there is an overflow edge, it must be designed in such a way to ensure smooth overflow and be long enough.

3/12/18

The inlet area and bypass channel should be covered by a grating.
If there is a danger of freezing, it is necessary to insulate the channel.

The standard delivery of the filter includes a sludge tank and a sludge pump, which is automatically activated by a water level sensor to empty the tank when it is full. There is also a possibility of gravitational discharge upon agreement with the sales representatives of our company.

The filter can be installed to the concrete channel into batteries (more filters for one inlet). Each filter operates independently but all the filters are set to one another to operate fully automatically. There can be only one switchboard for several filters. Each filter should have a service channel either together with another filter or separate.

All filters are equipped with a cover.

2. Installation into the steel tank

The filter can be used on an open area. The filter is connected by pipes. The diameters of the connections can be changed within a certain range. Standard connecting points for inlet and outlet are ended with flanges.

The standard delivery of this filter includes a sludge tank.
Sludge discharge can be done in two possible ways, which can be combined:

- Gravitational discharge, sludge is discharged by gravitational flow
- Sludge pump situated in the tank where sludge is pumped away.

The switchboard, if part of the delivery, is recommended to be positioned directly on the filter. It is necessary to ensure good access to the switchboard.

The filter should be installed in places where it does not freeze. If it is not possible to ensure this, the filter must be equipped with an insulated cover for the filter as well as the sludge tank. Normally, the filter is not insulated all.

Two types of water level sensors can be used for the filter:

- Contact:
  - Three sensors at the inlet of the filter (switch-on, switch-off and emergency)
  - Two sensors in the sludge tank (switch-on and switch-off)
  - It is possible to mechanically set levels by the sensors.
- Pressure:
  - Only one sensor at the inlet of the filter and in the sludge tank (2pcs in total)
  - The switchboard controlling these sensors includes PLC (logo siemens)
  - Levels can be easily set in the PLC.

In both cases level sensors must be cleaned of impurities (see the manual).

Installation of the filter

The filter, mainly when installed in the concrete channel, must be positioned in such a way so the water level on the influent side of the filter ranges within the limits (see the design drawings). The water level in the preliminary devices (secondary settling tank, flotation unit DAF,...) must be at least 100mm higher than maximum (emergency) level of the filter.

3/12/18

The flow of inlet water to the filter must be gradual, water must not splash or whirl or bounce off. Therefore, in the case of the filter to the concrete channel, it is necessary to have a stilling chamber (see the drawing). Another solution is to have inlet under the water level in front of the filter (water flows and does not splash). In the case of the filter installed in the steel tank, the solution is to have a stilling chamber placed in front of the filter.

It must be possible to stop the inlet to the filter (e.g. using a sluice gate) and empty the tank with the filter. The bypass of the filter can be equipped with an overflow edge (**of necessary length**!) or electric sluice gate.
Inlet water to the filter must be removed of impurities exceeding 10mm, sharp impurities, grit, fat and sticky substances.
Every filter produces sludge. The concrete filter usually contains a sludge tank from which the sludge is pumped by a sludge pump. The sizes of connecting points are given in the drawings. In the place of the installation of the filter the coupler for the sludge pump pipe must have a backflow valve. If there is a danger of freezing, the coupler must be insulated or heated. If there is a gravitational discharge pipe for sludge, it is necessary to prepare pipes for connection.

The filter can be equipped with a terminal board, free cables or cable bundle in the gooseneck. This cable line must be preset according to applicable standards as well as the position of the switchboards.

A lifting device for filter assembly must be prepared at the channel with the appropriate load (according to the type of the filter) so the filter can be set in the channel.

Type designation

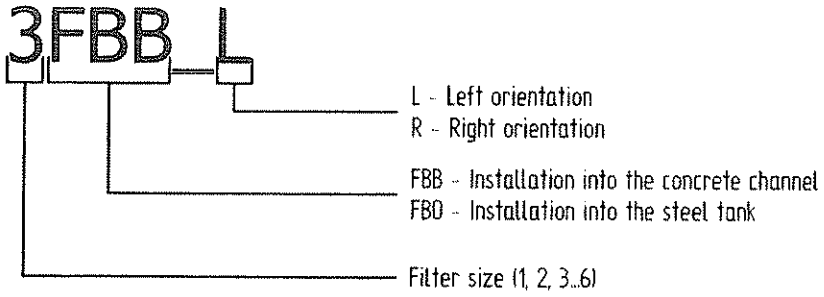

Note:the filter side orientation is established when looked at the filter from the side of the opening cover. When water flows through the filter from left to right, it is the right version and vice versa. (see the figure below)

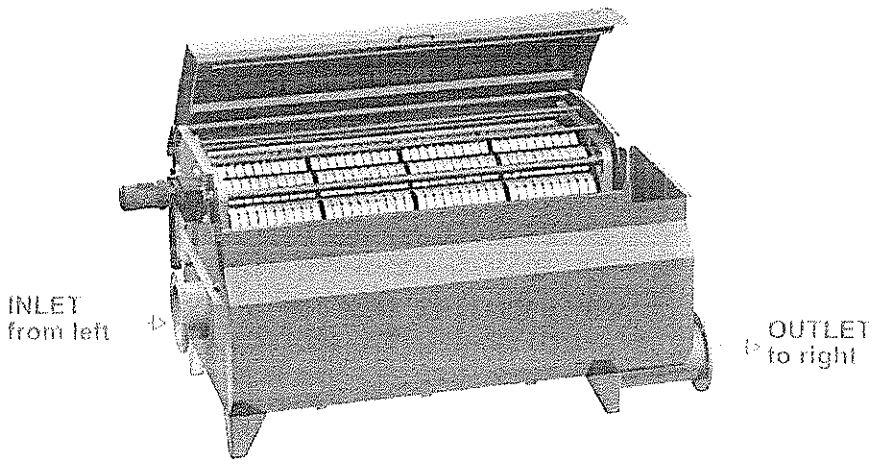

Right-hand model of the filter

3/12/18

Innovation of the filter drum

A new type of filter drum was developed in order to simplify replacement of filter cloth (now filter sections). This easy replacement makes the process faster and the service cost-efficient. Innovation of the filter sections also increases the life span and resistance of the filter cloth.

The size of the filter is given by the number of sections in a row and along the circumference of the filter drum (see Tab. 1)

FILTER TYPE	NUMBER OF SECTIONS IN ONE ROW	NUMBER OF ROWS	TOTAL NUMBER SECTIONS
1FBO	1	7	7
1FBB	1	7	7
2FBO	2	9	18
2FBB	2	9	18
3FBO	3	12	36
3FBB	3	12	36
4FBO	4	15	60
4FBB	4	15	60
5FBO	5	18	90
5FBB	5	18	90
6FBO	6	23	138
6FBB	6	23	138

Tab. 1

The installed section already contains the filter cloth and its replacement is done piece by piece using the "cli-clo" system.

Filter area of the drum

FILTER TYPE	FILTER AREA OF THE DRUM in m^2	APPLICABLE FILTER AREA OF THE DRUM in m^2
1FBO	0.728	0.416
1FBB		
2FBO	1.872	1.109
2FBB		
3FBO	3.744	2.392
3FBB		
4FBO	6.240	4.16
4FBB		
5FBO	9.360	6.24
5FBB		
6FBO	13.104	8.736
6FBB		

3/12/18

Tab. 2

The switchboard must be placed in such a way to enable a visual check of the operation of the filter. If the delivery includes a switchboard and assembly, IN-EKO representative must be informed of the location of the switchboard and cable line one week before the assembly!

Replacement of filter cloth using the "CLI-CLO" system:

- The filter cloth is attached to a plastic frame which constitutes a separate filter section, the same for all filter types. The number of filter sections to be replaced depends on the size of the filter.
- Replacement of filter sections is very easy, there are no fixtures or couplers.
- The lifespan of the filter cloth is considerably higher. The filter cloth can be made of polyamide or stainless steel.

3/12/18

Design drawings:

FBB

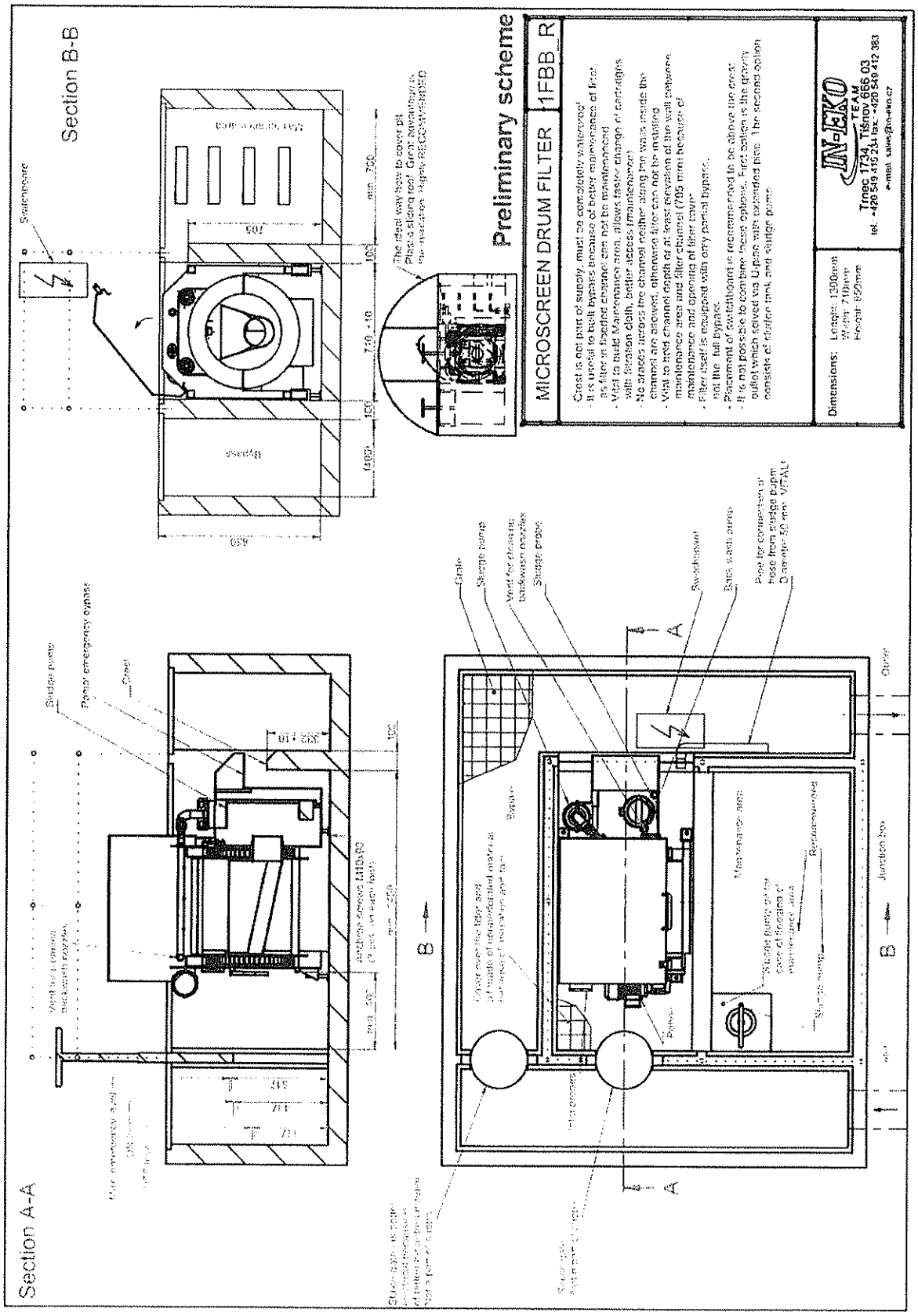

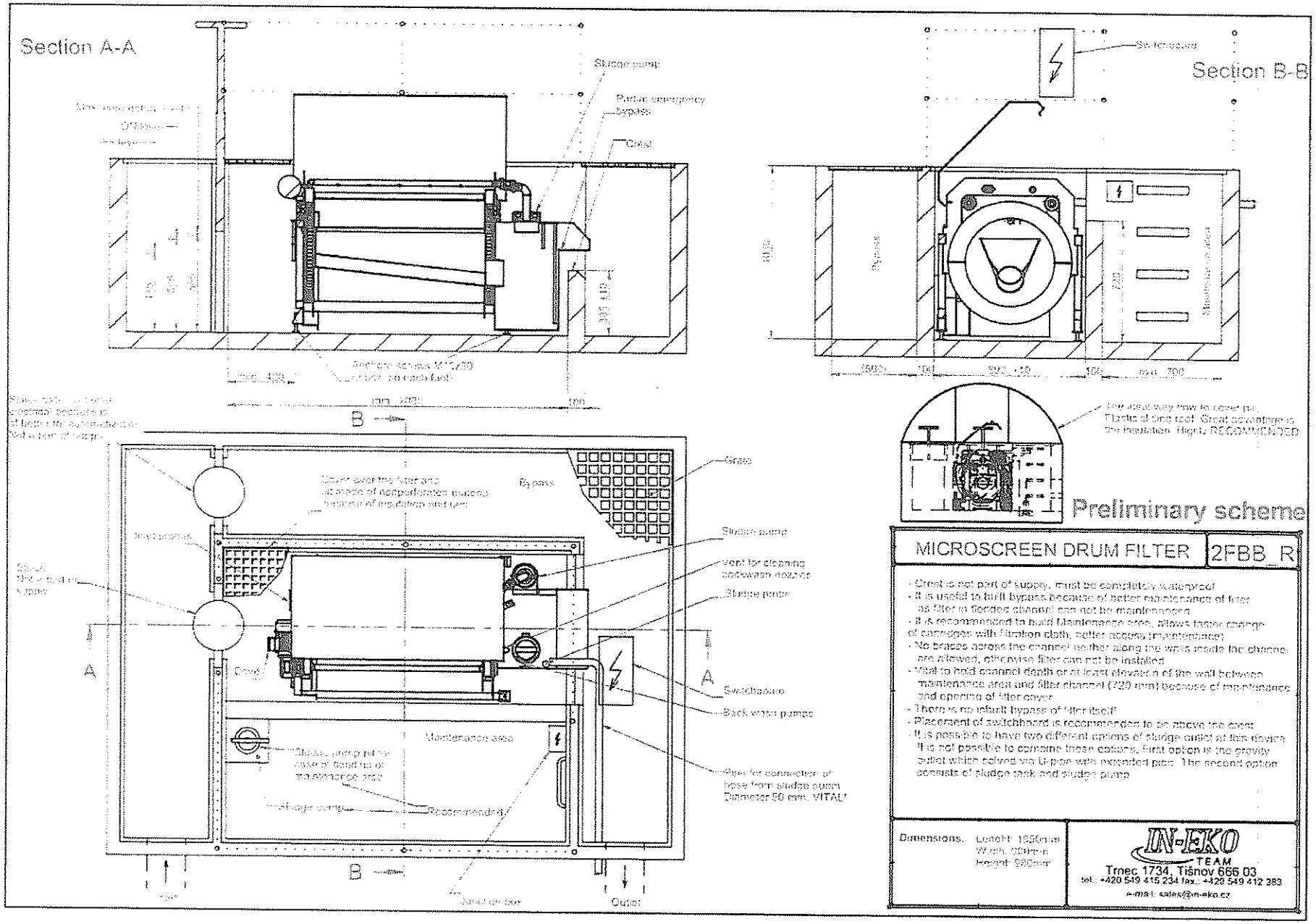
Section A-A
Sludge pump
Partial emergency bypass
Crest
Section B-B
Switchboard
Bypass
Grate
Sludge pump
Vent for cleaning backwash nozzles
Sludge probe
Switchboard
Back wash pumps
Maintenance area
Recommended
Outlet
Preliminary scheme
MICROSCREEN DRUM FILTER
2FBB R
- Crest is not part of supply, must be completely waterproof
- It is useful to built bypass because of better maintenance of filter as filter in flooded channel can not be maintenanced
- It is recommended to build Maintenance area, allows faster change of cartridges with filtration cloth, better access (maintenance)
- No braces across the channel neither along the walls inside the channel are allowed, otherwise filter can not be installed
- Vital to hold channel depth or at least elevation of the wall between maintenance area and filter channel (720 mm) because of maintenance and opening of filter cover
- There is no inbuilt bypass of filter itself
- Placement of switchboard is recommended to be above the crest
- It is possible to have two different options of sludge outlet at this device. It is not possible to combine these options. First option is the gravity outlet which solved via U-pipe with extended pipe. The second option consists of sludge tank and sludge pump
Dimensions.
IN-EKO TEAM
Trnec 1734, Tišnov 666 03
tel.: +420 549 415 234 fax.: +420 549 412 383
e-mail: sales@in-eko.cz

3/19/78

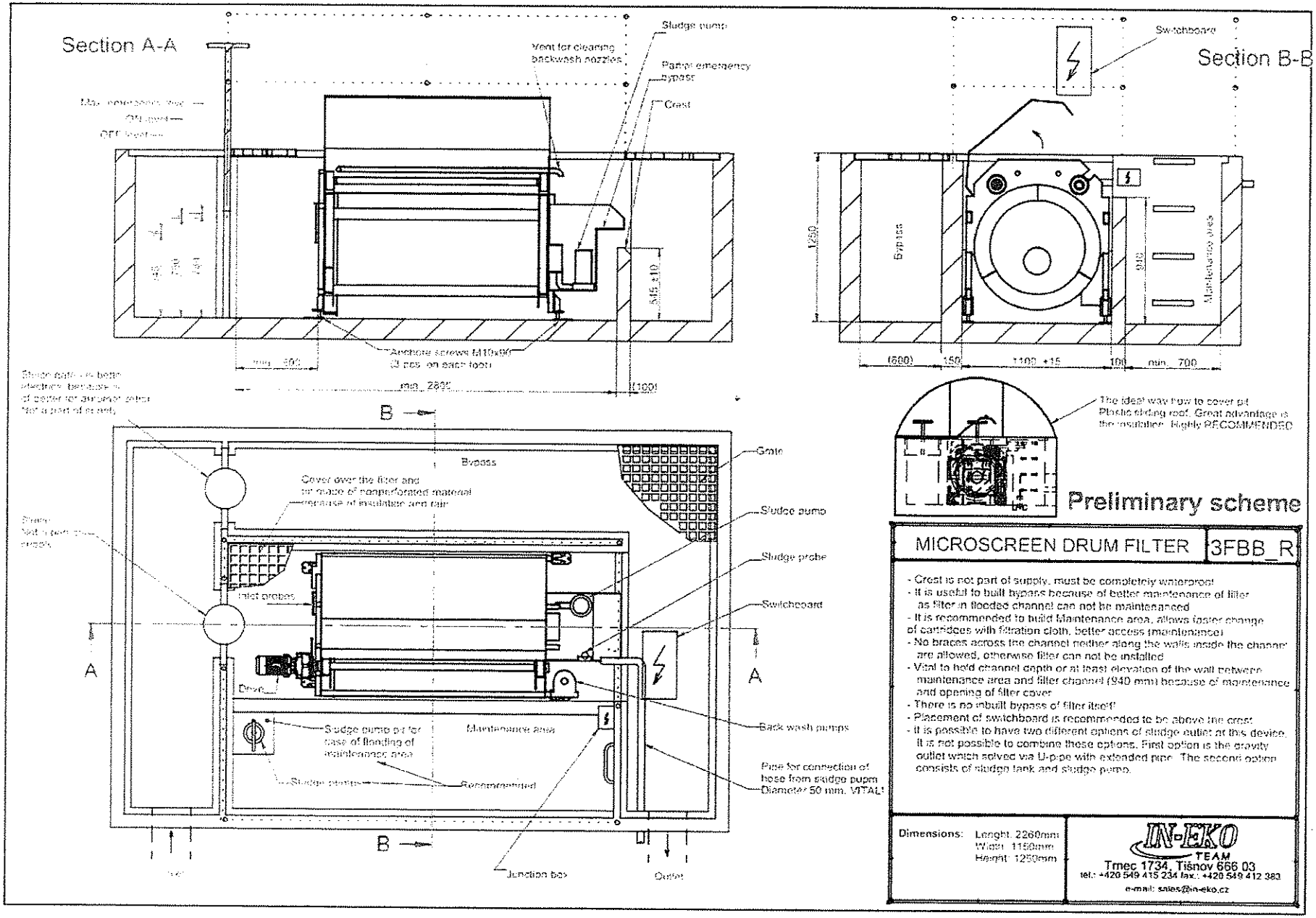
Section A-A
Sludge pump
Vent for cleaning backwash nozzles
Partial emergency bypass
Crest
Anchore screws M10x90 (3 pcs. on each foot)
min. 2800
(100)
Section B-B
Switchboard
Bypass
Maintenance area
1250
(600)
150
1100 +15
100
min. 700
The ideal way how to cover pit Plastic sliding roof. Great advantage is the insulation. Highly RECOMMENDED
Preliminary scheme
Bypass
Cover over the filter and air made of nonperforated material because of insulation and rain
Grate
Sludge pump
Sludge probe
Switchboard
Inlet probes
Drive
Sludge pump pit for case of flooding of maintenance area
Maintenance area
Sludge pump
Recommended
Back wash pumps
Pipe for connection of hose from sludge pupm Diameter 50 mm. VITAL!
Junction box
Outlet
A
B
MICROSCREEN DRUM FILTER
3FBB_R
- Crest is not part of supply, must be completely waterproof
- It is useful to built bypass because of better maintenance of filter as filter in flooded channel can not be maintenanced
- It is recommended to build Maintenance area, allows faster change of cartridges with filtration cloth, better access (maintenance)
- No braces across the channel neither along the walls inside the channel are allowed, otherwise filter can not be installed
- Vital to hold channel depth or at least elevation of the wall between maintenance area and filter channel (940 mm) because of maintenance and opening of filter cover
- There is no inbuilt bypass of filter itself!
- Placement of switchboard is recommended to be above the crest
- It is possible to have two different options of sludge outlet at this device. It is not possible to combine these options. First option is the gravity outlet which solved via U-pipe with extended pipe. The second option consists of sludge tank and sludge pump.
Dimensions: Lenght: 2260mm Width: 1150mm Height: 1250mm
IN-EKO TEAM
Trnec 1734, Tišnov 666 03
tel.: +420 549 415 234 fax.: +420 549 412 383
e-mail: sales@in-eko.cz

3/22/78

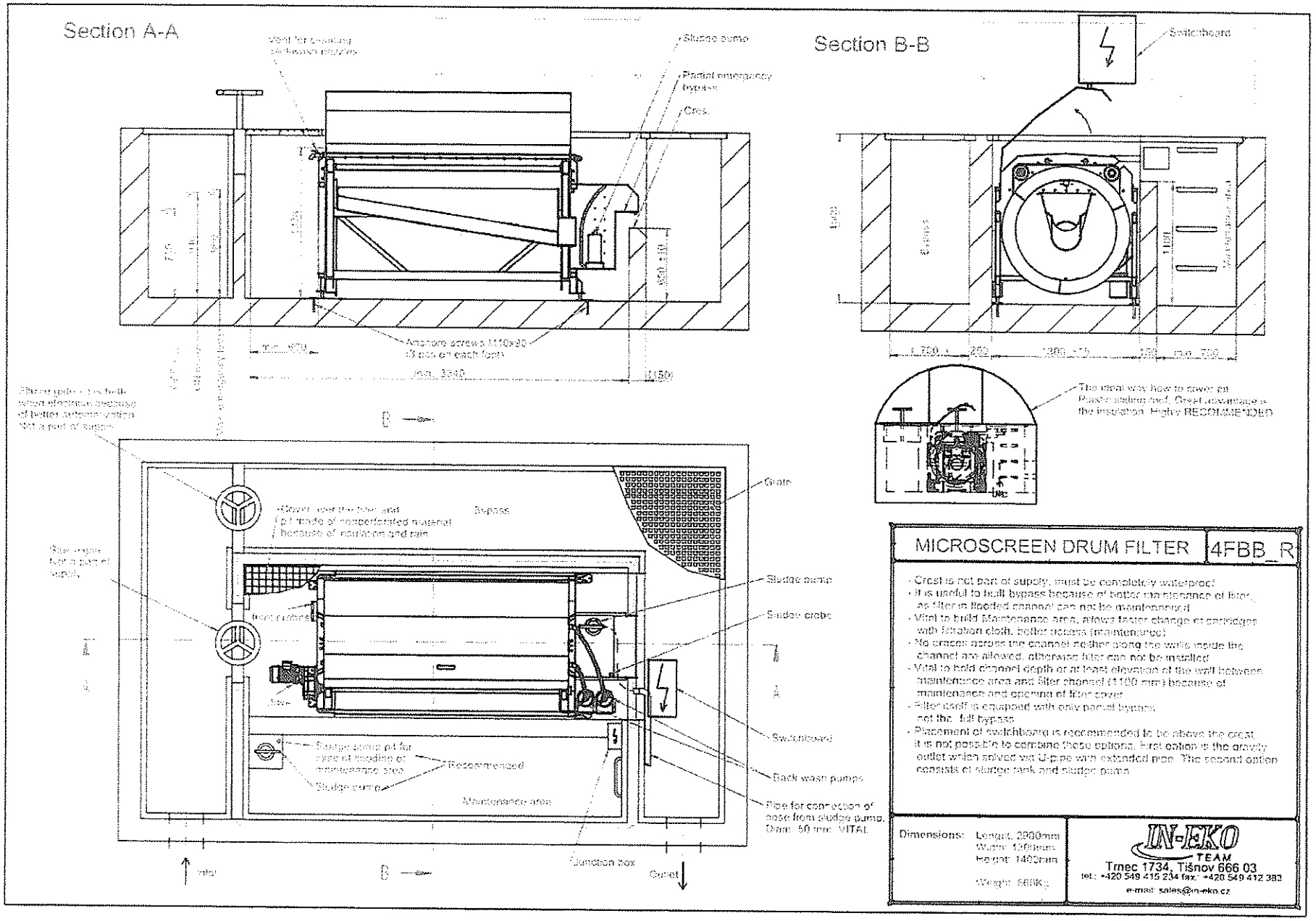
Section A-A
Section B-B
Sludge pump
Partial emergency bypass
Crest
Anchore screws M10x90 (3 pcs on each foot)
Switchboard
Bypass
Grate
Sludge pump
Sludge crabs
Switchboard
Back wash pumps
Pipe for connection of hose from sludge pump. Diam. 50 mm. VITAL
Junction box
Inlet
Outlet
Recommended
Sludge pump
Maintenance area
The ideal way how to cover pit. Plastic sliding roof. Great advantage is the insulation. Highly RECOMMENDED
MICROSCREEN DRUM FILTER
4FBB_R
- Crest is not part of supply, must be completely waterproof
- It is useful to built bypass because of better maintenance of filter, as filter in flooded channel can not be maintenanced
- Vital to build Maintenance area, allows faster change of cartridges with filtration cloth, better access (maintenance)
- No braces across the channel neither along the walls inside the channel are allowed, otherwise filter can not be installed
- Vital to hold channel depth or at least elevation of the wall between maintenance area and filter channel (1100 mm) because of maintenance and opening of filter cover
- Filter itself is equipped with only partial bypass not the full bypass
- Placement of switchboard is recommended to be above the crest, it is not possible to combine these options. First option is the gravity outlet which solved via U-pipe with extended pipe. The second option consists of sludge tank and sludge pump
Dimensions: Lenght: 2900mm
Height: 1400mm
Weight: 666Kg
IN-EKO TEAM
Trnec 1734, Tišnov 666 03
tel.: +420 549 415 234 fax.: +420 549 412 383
e-mail: sales@in-eko.cz

3/12/78

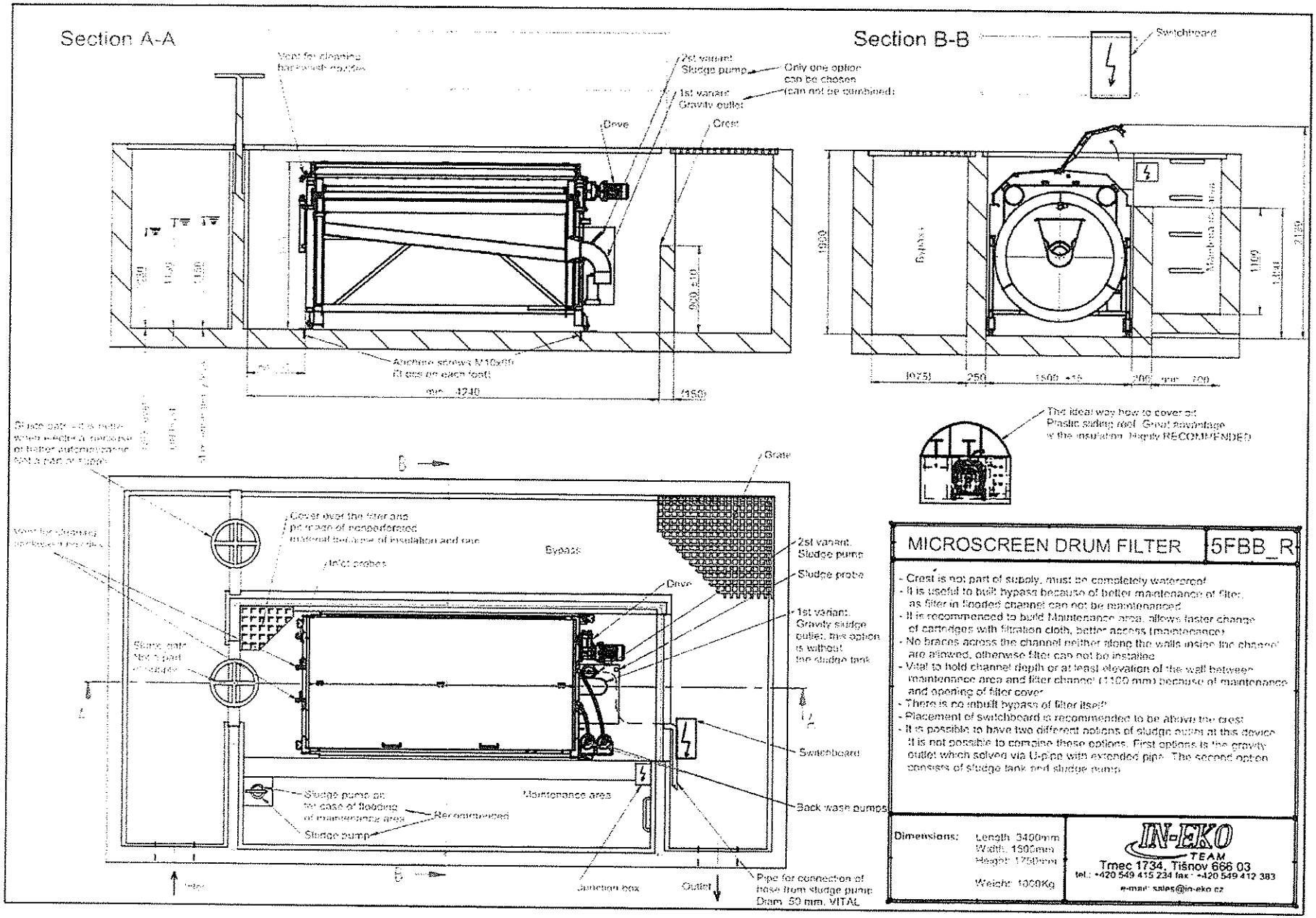

MICROSCREEN DRUM FILTER	5FBB_R

- Crest is not part of supply, must be completely watercroof
- It is useful to built bypass because of better maintenance of filter, as filter in flooded channel can not be maintenanced
- It is recommended to build Maintenance area, allows faster change of cartridges with filtration cloth, better access (maintenance)
- No braces across the channel neither along the walls inside the channel are allowed, otherwise filter can not be installed
- Vital to hold channel depth or at least elevation of the wall between maintenance area and filter channel (1169 mm) because of maintenance and opening of filter cover
- There is no inbuilt bypass of filter itself
- Placement of switchboard is recommended to be above the crest
- It is possible to have two different options of sludge pump at this device. It is not possible to combine these options. First option is the gravity outlet which solved via U-pipe with extended pipe. The second option consists of sludge tank and sludge pump

Dimensions: Length 3400mm, Width: 1500mm, Height: 1750mm, Weight: 1000Kg

IN-EKO TEAM
Tmec 1734, Tišnov 666 03
tel.: +420 549 415 234 fax: +420 549 412 383
e-mail: sales@in-eko.cz

IN-EKO

3/2018

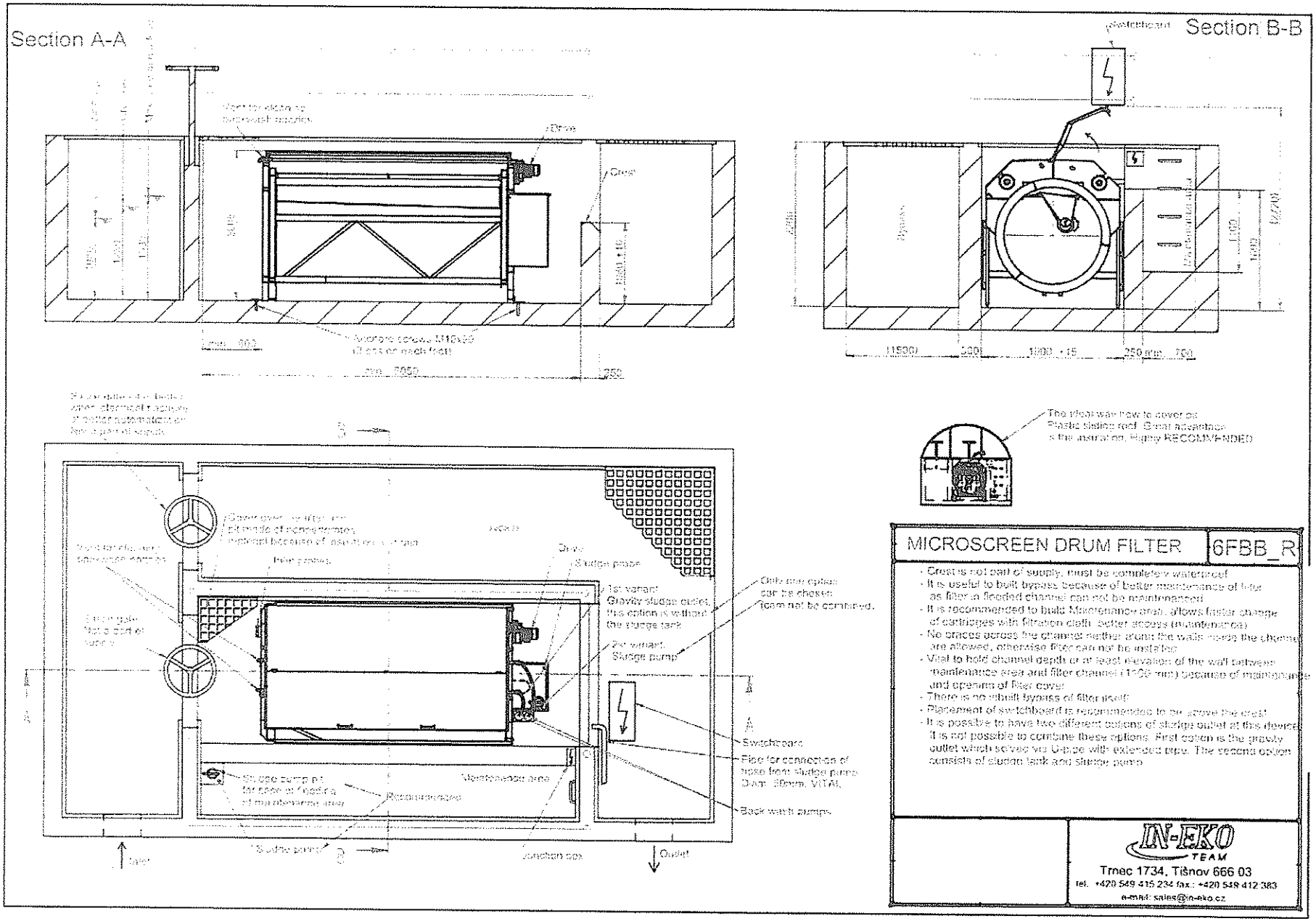
Section A-A
Section B-B
Switchboard
Drive
Crest
Bypass
Maintenance area
Inlet process
Sludge probe
1st variant
Gravity sludge outlet, this option is without the sludge tank
2nd variant
Sludge pump
Only one option can be chosen (cam not be combined)
Switchboard
Pipe for connection of hose from sludge pump Diam. 50mm, VITAL
Back wash pumps
Maintenance area
Recommended
Sludge pump
Junction box
Outlet
The ideal way how to cover pit
Plastic sliding roof. Great advantage is the insulation. Highly RECOMMENDED
MICROSCREEN DRUM FILTER
6FBB_R
- Crest is not part of supply, must be completely waterproof
- It is useful to built bypass because of better maintenance of filter as filter in flooded channel can not be maintenanced
- It is recommended to build Maintenance area, allows faster change of cartridges with filtration cloth, better access (maintenance)
- No braces across the channel neither around the walls inside the channel are allowed, otherwise filter can not be installed
- Vital to hold channel depth or at least elevation of the wall between maintenance area and filter channel (1100 mm) because of maintenance and opening of filter cover
- There is no inbuilt bypass of filter itself
- Placement of switchboard is recommended to be above the crest
- It is possible to have two different options of sludge outlet at this device. It is not possible to combine these options. First option is the gravity outlet which solves via U-pipe with extended pipe. The second option consists of sludge tank and sludge pump
IN-EKO TEAM
Trnec 1734, Tišnov 666 03
tel. +420 549 415 234 fax.: +420 549 412 383
e-mail: sales@in-eko.cz

3/19/18

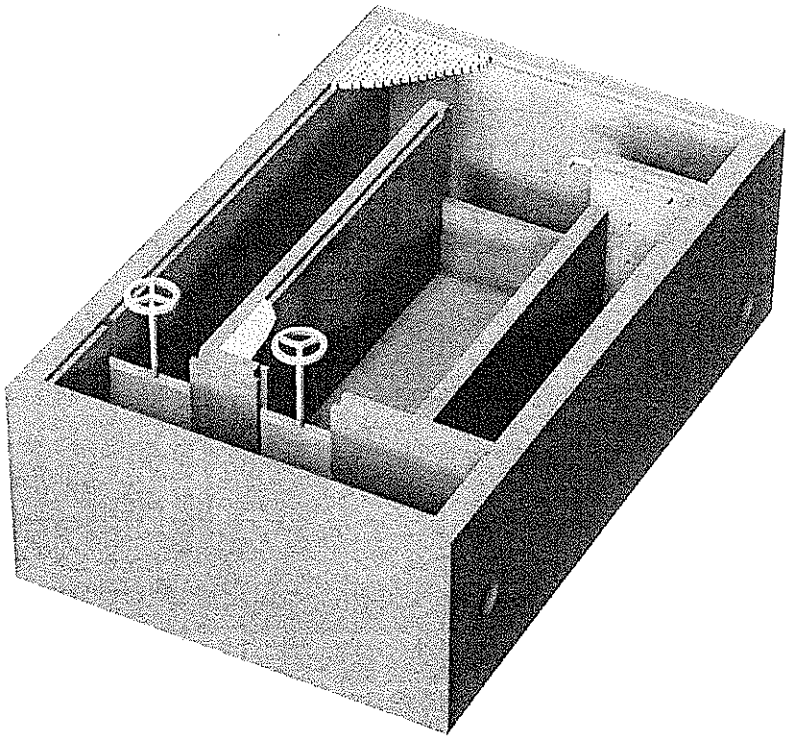

Fig. 1 – Channel - model

REZ

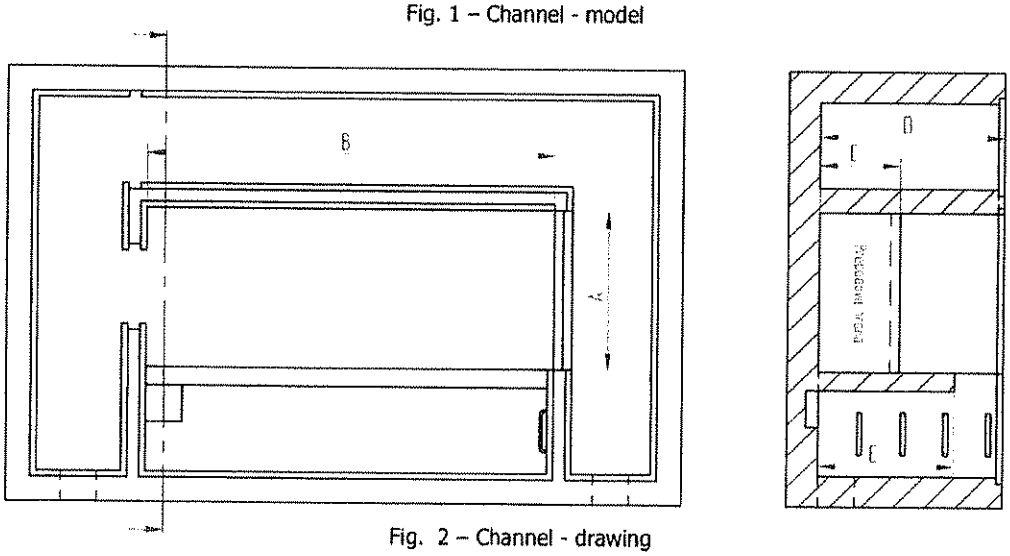

Fig. 2 – Channel - drawing

FILTER TYPE	A [mm]	B [mm]	C [mm]	D [mm]	E [mm]
1FBB	710	1450	332	850	705
2FBB	890	2000	385	1030	720
3FBB	1100	2800	545	1250	940
4FBB	1300	3340	650	1500	1100
5FBB	1500	4240	900	1900	1100
6FBB	1900	5050	1080	2200	1100

Tab. 4

3/12/18

Working platform:

If the filter design does not enable to build a service channel (e.g. due to insufficient space), it is possible to use a working platform, which can be supplied together with the filter upon agreement with the IN-EKO representative. It is a stainless steel platform which enables better access to the filter, which is set deep in the channel.

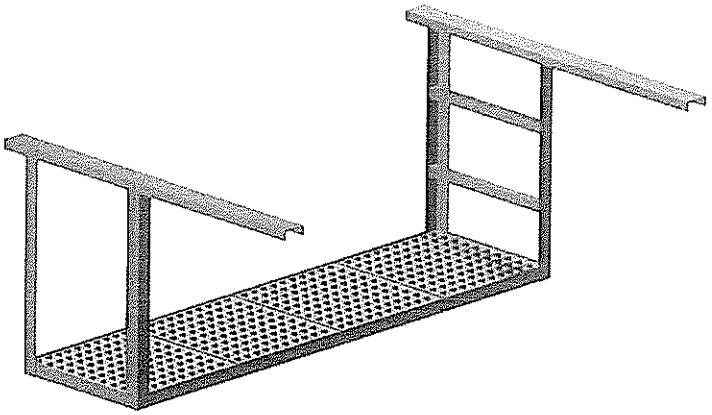

Fig. 3 – Working platform

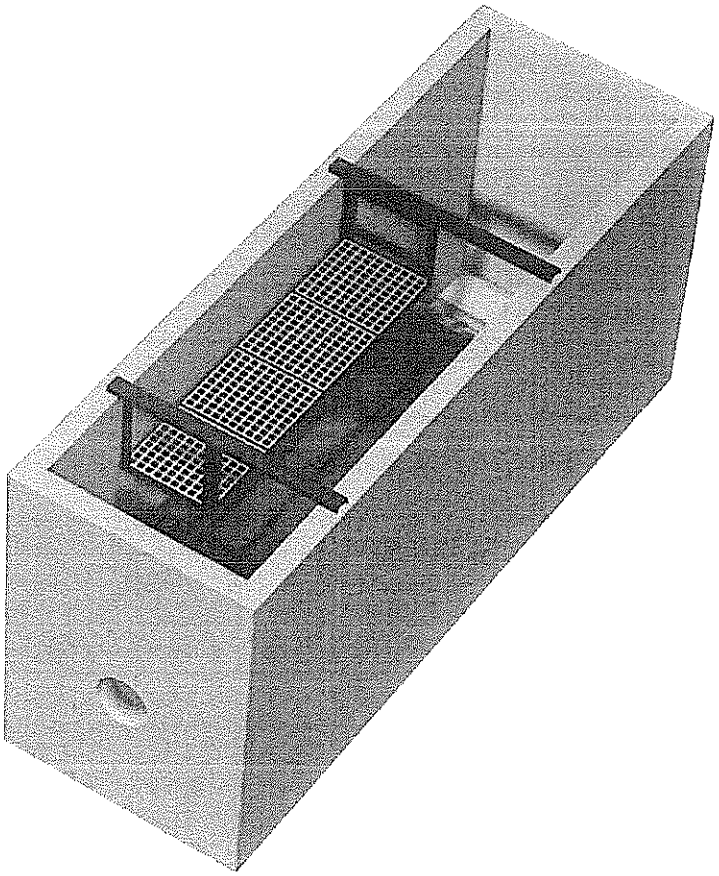

Fig. 4 – Working platform in the channel

3/12/18

FBO

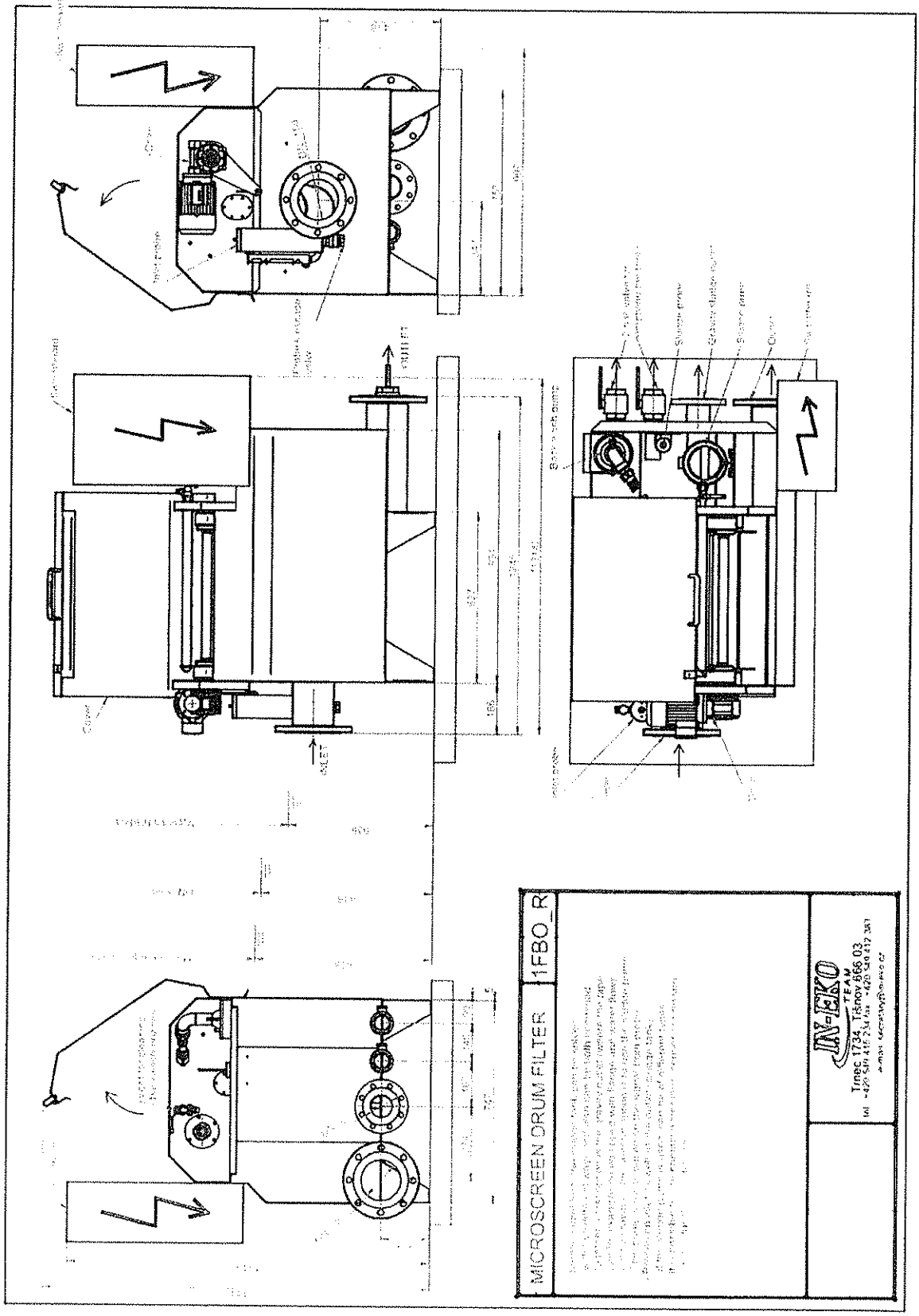
MICROSCREEN DRUM FILTER
1FBO_R
IN-EKO TEAM
Tinec 1734, Tišnov 666 03

3/12/18

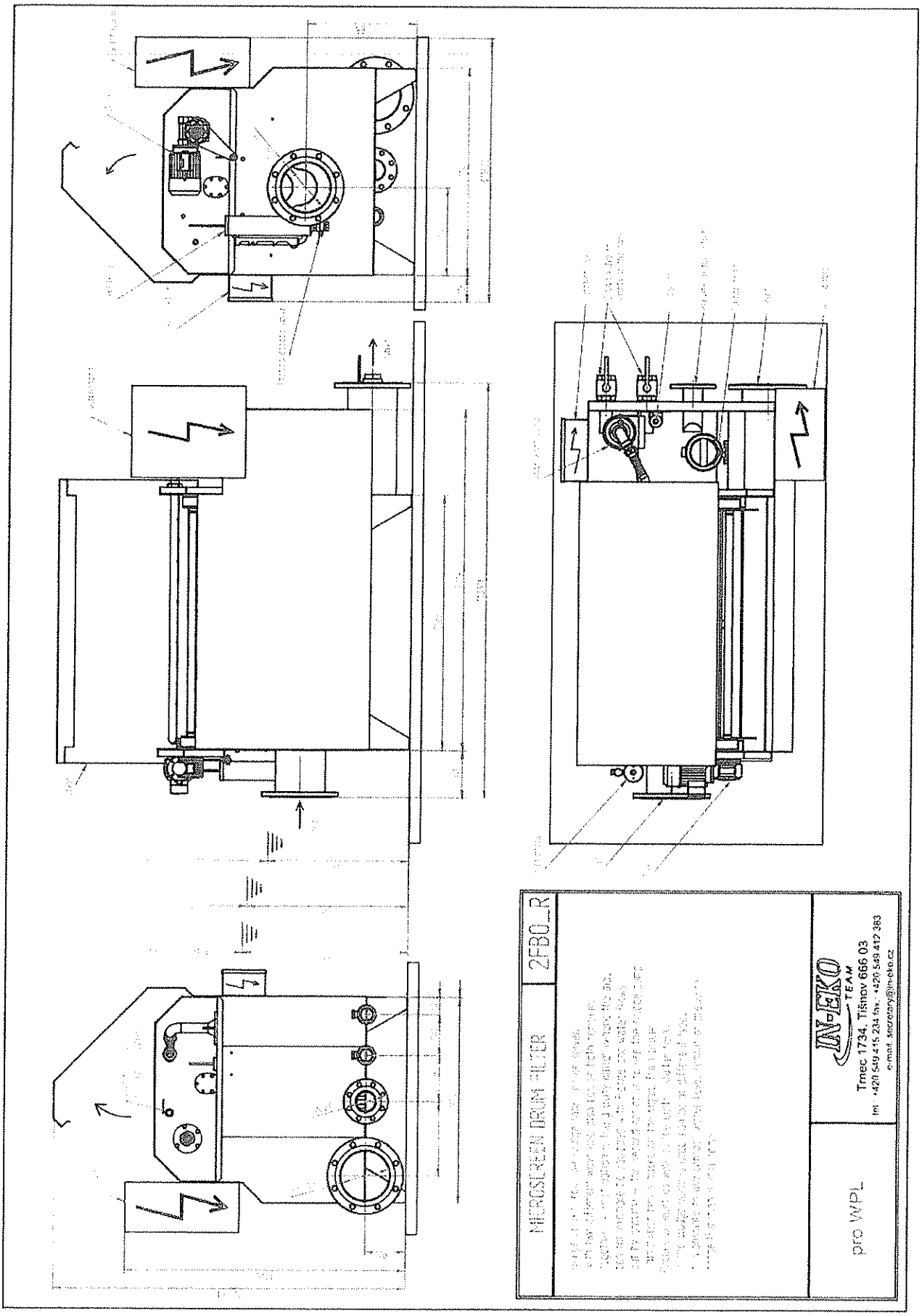
MICROSCREEN DRUM FILTER
2FBO_R
pro WPL
IN-EKO TEAM
Tmec 1734, Třinec 666 03
tel.: +420 549 415 234 fax.: +420 549 417 383
e-mail: secretary@in-eko.cz

3192418

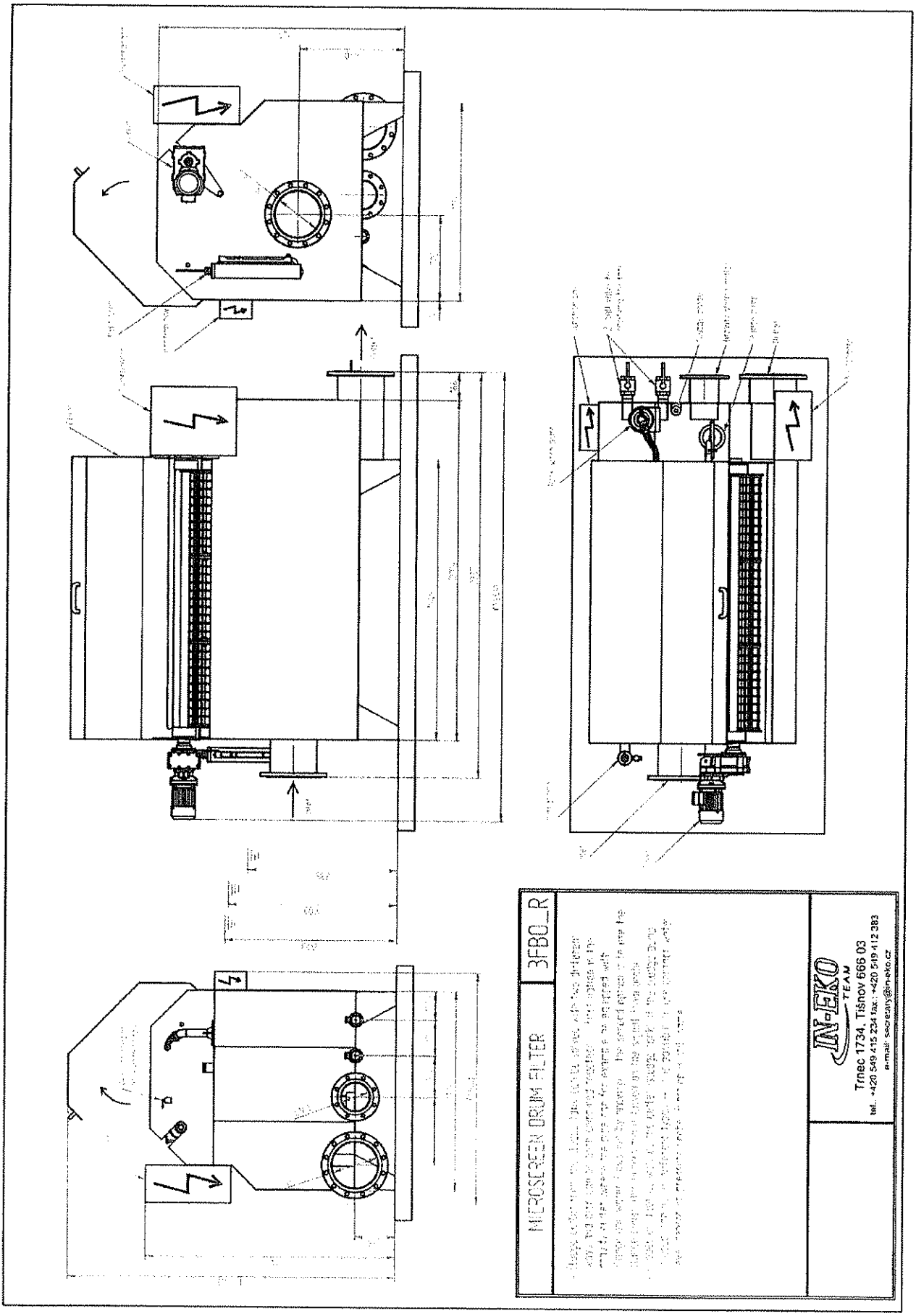
MICROSCREEN DRUM FILTER
3FBO_R
IN-EKO
TEAM
Trnec 1734, Tišnov 666 03
tel.: +420 549 415 234 fax: +420 549 412 383
e-mail: secretary@in-eko.cz

3/12/18

MICROSCREEN DRUM FILTER
4FBO_R
IN-EKO
TEAM
Trnec 1734, Tišnov 666 03
tel.: +420 549 415 234, fax: +420 549 412 383
e-mail: sekretary@in-eko.cz

3/12/18

MICROSCREEN DRUM FILTER
5FBO_R
IN-EKO TEAM
Trnec 1734, Tišnov 666 03
tel.: +420 549 415 234 fax.: +420 549 412 383
e-mail: secretary@in-eko.cz

31/12/18

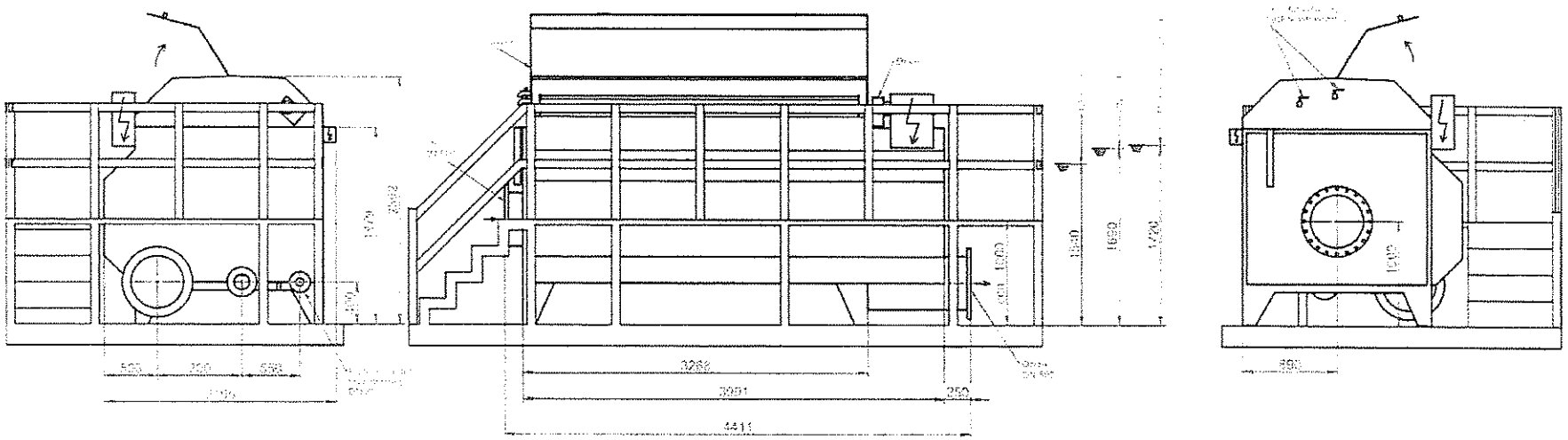

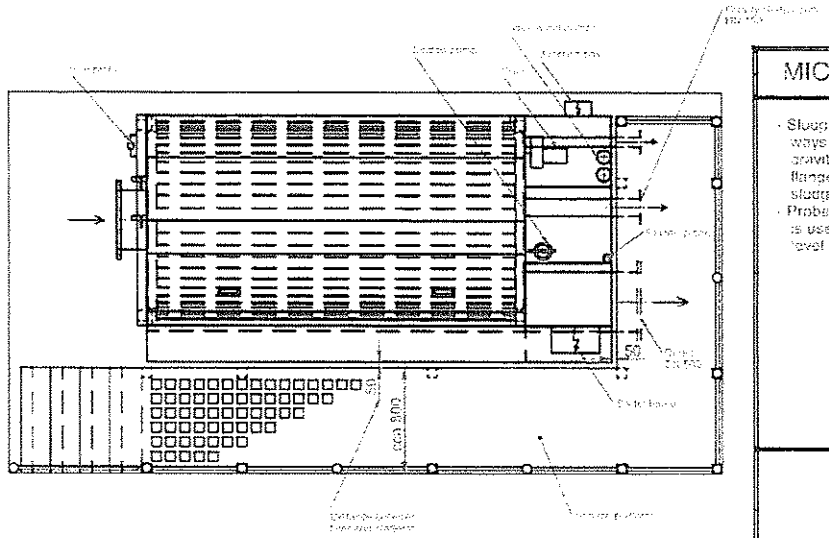

MICROSCREEN DRUM FILTER | 6FBO_R

- Sludge outlet from the sludge tank can be solved with two different ways and also can be both combined together - first option is the gravity outlet (where the pipe can for example be equipped with flange and water flows out by gravity) – the second option is to use the sludge pump. This pump's run is based on the signal from probe.
- Probes on inlet as well as the outlet (sludge tank), if the sludge pump is used, can be of different types – It is possible to use contact water level sensor or pressure probe (function is still same)

IN-EKO TEAM
Trnec 1734, Tišnov 666 03
tel.: +420 549 415 234 fax.: +420 549 412 363
e-mail: secretary@in-eko.cz

IN-EKO TEAM

3/12/18

Dimension chart of steel filters

FILTER TYPE	LENGTH [mm]	WIDTH [mm]	HEIGHT [mm]
1FBO	1330	910	1360
2FBO	1840	1170	1260
3FBO	2660	1380	1490
4FBO	3130	1560	1600
5FBO	3450	1680	1950
6FBO	4420	2080	2370

Tab. 3

Mounting ramp, shown in the drawing for 5FBO and 6FBO filters is not part of the delivery. This ramp (platform) can be made and supplied with the filter upon an agreement with the IN-EKO representative.

Connecting sizes for filter inlet and outlet in the steel tank:

FILTER TYPE	INLET [DN]	OUTLET OF PRETREATED WATER [DN]	OUTLET FROM SLUDGE TANK [DN]	DISCHARGE VALVE OF THE TANK ["]
1FBO	150	150	80	2
2FBO	200	200	80	2
3FBO	250	250	150	2
4FBO	300	300	150	2
5FBO	350	350	150	2
6FBO	500	500	150	2

Tab. 4

3192/18

Dimensions of switchboards and their stands

A stand for a switchboard is necessary if the switchboard is not positioned directly on the filter or on the wall next to it, but e.g. on the floor near the filter or directly on the concrete channel. Figures 3-5 show the recommended shapes of stands for the switchboards. Fig. 6 a 7 show 2 standards types of switchboards for our filters. One is for a filter with pressure sensors and the other for a filter with contact sensors.

Stands for switchboards:

If mounted on the concrete channel:

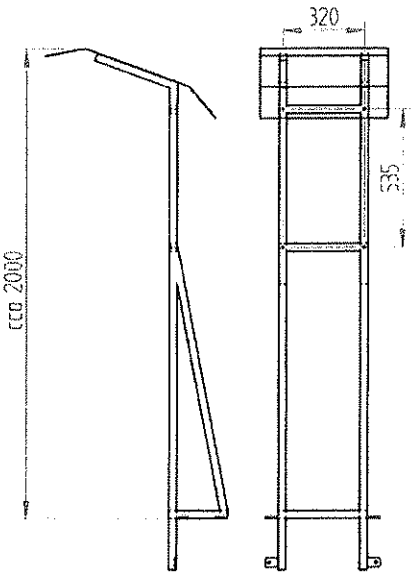

Fig. 3 – for a filter with contact sensor

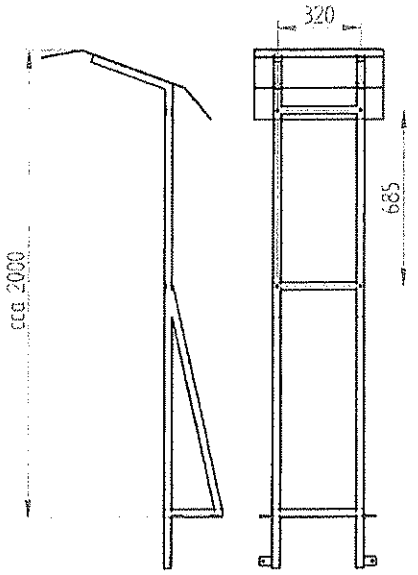

Fig. 4 – for filter with a pressure sensor

If mounted on the floor:

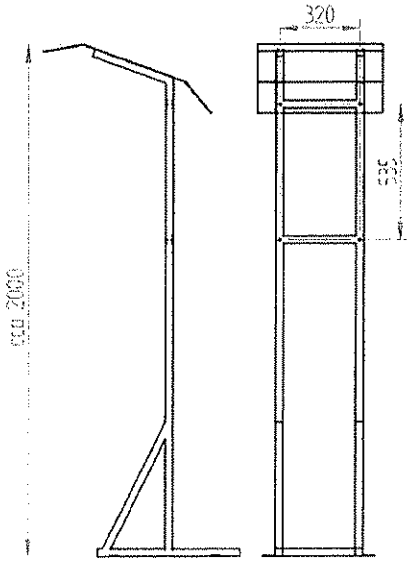

Fig. 4 – filter with a contact sensor

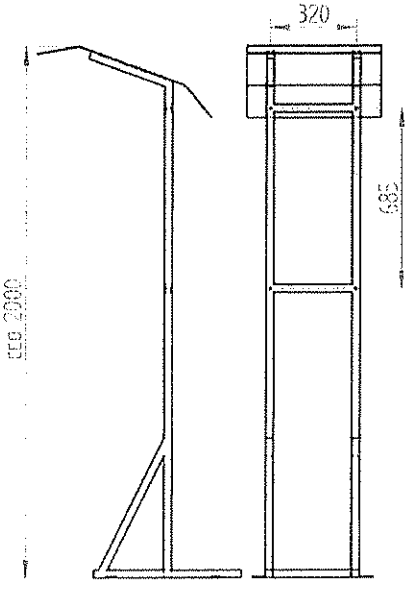

Fig. 5 – filter with a pressure sensor

3/12/18

Standard switchboards:

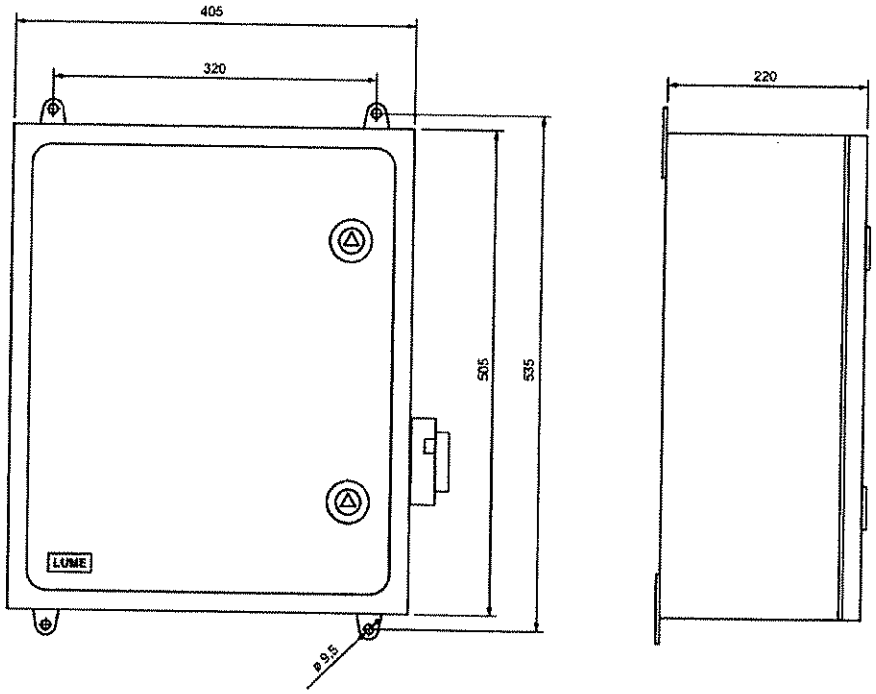

Fig. 6 – switchboard for filter with a contact sensor

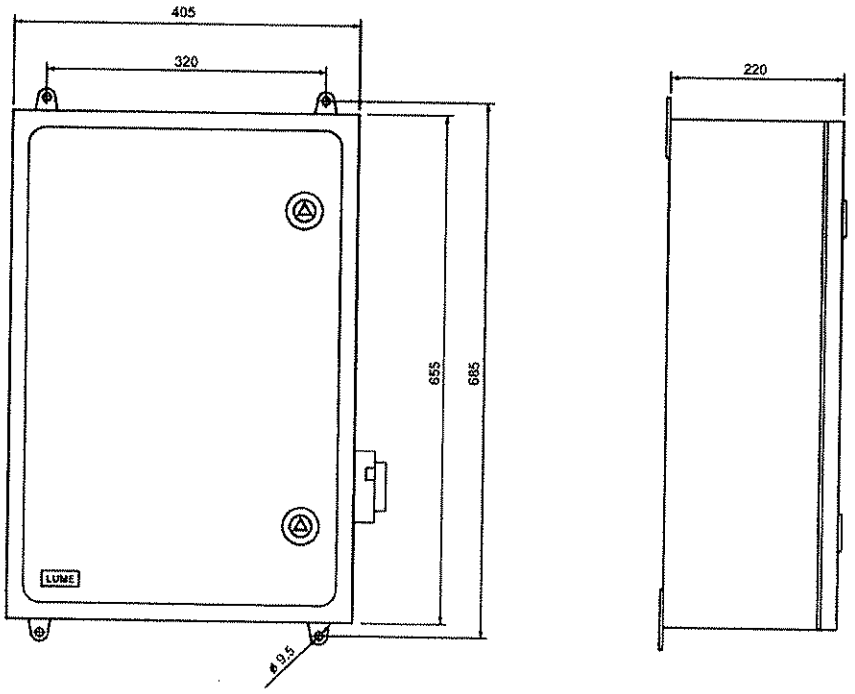

Fig. 7 – switchboard for filter with a pressure sensor

3/12/18

Contacts

IN-EKO TEAM s.r.o.
Trnec 1734
666 03 Tišnov, Czech Republic

WWW.IN-EKO.CZ

Secretary
Tel.: +420 549 415 234
+420 549 415 589
+420 549 411 149
Fax.: +420 549 412 383
Email: secretary@in-eko.cz

Executive Manager
Eva Komárková
GSM: +420 777 744 977
Email: eva.komarkova@in-eko.cz

Sales department
Ing. Zuzana Sadílková
GSM: +420 777 744 974
Email: trade@in-eko.cz

Ing. Jan Bednář
GSM: +420 777 744 552
Email: project@in-eko.cz

Aleš Vaverka
GSM: +420 775 852 211
Email: sales@in-eko.cz

Production and service
Luděk Halouzka
GSM: +420 777 745 146
Email: help@in-eko.cz

3/12/18

BUREAU VERITAS
Certification

Certifikát

udělený organizaci

IN - EKO Team s.r.o.

Sídlo: Zatloukalova 172/4, Ivanovice, Brno
Provozovna: Tišnov, Trnec 1734
Česká republika

Bureau Veritas Certification Holding SAS – UK Branch tímto osvědčuje, že systém managementu výše uvedené organizace byl posouzen a shledán ve shodě s požadavky následující systémové normy:

Norma

ISO 9001:2008

Oblast certifikace
(Oblast certifikace je platná pouze pro provozovnu)

NÁVRH, VÝVOJ, VÝROBA, PRODEJ A SERVIS ZAŘÍZENÍ PRO ČIŠTĚNÍ ODPADNÍCH VOD. PROVÁDĚNÍ ZÁMEČNICKÝCH PRACÍ.

Počáteční datum certifikačního cyklu: 16. ZÁŘÍ 2016

Tento certifikát platí – za předpokladu následného uspokojivého udržování funkčnosti systému managementu do: 15. ZÁŘÍ 2018

Datum počátečního schválení: 30. ZÁŘÍ 2004

Číslo certifikátu: CZ005250-1/A

Verze 1, Datum revize: 16. ZÁŘÍ 2016

Podepsáno jménem BVCH SAS UK Branch

UKAS MANAGEMENT SYSTEMS

008

Certification body address: 66 Prescot Street, London E1 8HG, United Kingdom
Local office: BUREAU VERITAS CZECH REPUBLIC, spol. s r.o., Olbrachtova 1, 140 02 Praha 4, Czech Republic

Další vysvětlení týkající se rozsahu tohoto certifikátu a aplikovatelnosti požadavků systému řízení lze získat na základě konzultace s organizací
Pro ověření platnosti certifikátu volejte: +420 210 088 215

3/12/18

BUREAU VERITAS
Certification

Certification

Awarded to

IN - EKO Team s.r.o.

Registered address: Zatloukalova 172/4, Ivanovice, Brno
Site: Tišnov, Trnec 1734
Czech Republic

Bureau Veritas Certification Holding SAS – UK Branch certifies that the Management System of the above organisation has been audited and found to be in accordance with the requirements of the management system standard detailed below:

Standard

ISO 9001:2008

Scope of supply
(The scope of supply is valid only for site)

DESIGN, DEVELOPMENT, PRODUCTION, SALE AND SERVICE OF DEVICES FOR TREATMENT OF WASTEWATER. PURSUANCE OF LOCKSMITH WORK.

Certification cycle start date: 16th SEPTEMBER 2016

Subject to the continued satisfactory operation of the organisation's Management System, this certificate expires on: 15th SEPTEMBER 2018

Original certification date: 30th SEPTEMBER 2004

Certificate number: CZ005250-1/A

Version 1, Revision date: 16th SEPTEMBER 2016

Signed on behalf of BVCH SAS UK Branch

UKAS MANAGEMENT SYSTEMS
008

Certification body address: 66 Prescot Street, London E1 8HG, United Kingdom
Local office: BUREAU VERITAS CZECH REPUBLIC, spol. s r.o., Olbrachtova 1, 140 02 Praha 4, Czech Republic

Further clarifications regarding the scope of this certificate and the applicability of the management system requirements may be obtained by consulting the organisation. To check this certificate validity please call: +420 210 088 215

3172/18

Reference list of Microscreen drum filter

ALL FOR WATER IN-EKO

YEAR 2015

No.	COUNTRY	PLACE OF INSTALATION	TYPE	Pc.
1218	USA	WWTP USA	5_BMF_5_O	1
1216-1217	New Zeland	WWTP New Zeland	5FBO	2
1214-1215	Slovakia	WWTP Modra	4FBB_R_L	2
1213	Poland	WWTP Suloszowa	3FBB_R	1
1212	Russia	brewery Vladivostok	3FBO_L	1
1211	Slovakia	WWTP Poltár	4FBB	1
1210	Czech Republic	WWTP Jedovnice	2FBB	1
1208-1209	Czech Republic	WWTP Šurany	4FBB	2
1207	Ireland	WWTP Camara	2FBO_R	1
1205-1206	Norway	cruise ship	3FBO_atyp	2
1203-1204	Slovakia	WWTP Prievidza	6FBB	2
1201-1202	Norway	cruise ship	2FBO_atyp	2
1200	Hungary	WWTP Turkeve	4FBB_R	1
1197-1199	Hungary	WWTP Kethely	4FBO_R	3
1196	Hungary	WWTP Újhartyán-Kakucs	3FBB	1
1195	Czech Republic	WWTP Vysoká	1FBB	1
1194	Czech Republic	WWTP Bojanov	5_BMF_10_B2	1
1193	Hungary	WWTP Szikszo	2FBO_R	1
1192	Czech Republic	WWTP Běrunice	5_BMF_10_B2	1
1190-1191	Croatia	WWTP Mali Loščinj	6FBB_R/L	2
1189	Czech Republic	WWTP Ždánice	1FBB	1
1188	Czech Republic	WWTP Dolany	1FBB_R	1
1187	Czech Republic	WWTP Vranov nad Dyjí	1FBB	1
1186	Czech Republic	WWTP Zdiměřice u Prahy	2FBB	1
1184-1185	Slovakia	WWTP Moldava nad Bodvou	4FBB	2
1183	Slovakia	WWTP Bodva	5_BMF_13_B2	1
1182	Slovakia	WWTP Půchov	2FBO	1
1181	Great Britain	WWTP UK	5FBO_R	1
1179	Czech Republic	WWTP Ligary	3FBB	1
1178	Czech Republic	WWTP Bílá Lhota	1FBO	1
1177	Hungary	WWTP Soltvadkert	3FBB_L	1
1175-1176	Iran	WWTP Isfahan	6FBB	2
1173	Czech Republic	WWTP Městec Králové	4FBB_R	1
1171-1172	Czech Republic	WWTP Poděbrady	4FBB_R_L	2
1170	Czech Republic	WWTP Ivanovice na Hané	3FBB_L	1
1168	Czech Republic	WWTP Dolní Dobrouč	2FBB	1
1167	Czech Republic	WWTP Střítež	1FBB_R	1
1165	Slovakia	WWTP Divín	2FBB_R	1
1121-1123	Saudi Arabia	WWTP Epc Royal	6FBB	3
TOTAL				53

ALL FOR WATER IN-EKO

YEAR 2014

No.	COUNTRY	PLACE OF INSTALLATION	TYPE	Pc.
1180	Czech Republic	WWTP Horní Adršpach	1FBO	1
1174	Portugal	WWTP Cinfães	3FBO	1
1173	Czech Republic	WWTP Městec Králové	3FBB	1
1170	Czech Republic	WWTP Ivanovice na Hané	3FBB	1

31/12/18

1169	Czech Republic	WWTP Dolní Adršpach	1FBO	1
1166	Czech Republic	WWTP Vidnava	2FBB_L	1
1164	New Zealand	WWTP Pahiatua	4FBO	1
1163	New Zealand	WWTP Woodville	4FBO	1
1162	Greece	Rodopoli of Serres	10_BMF_20_O	1
1161	Czech Republic	WWTP Tršice	1FBO_L	1
1158-1160	Kazachstan	WWTP Pavlodar	6FBB	3
1155-1157	Kazachstan	WWTP Pavlodar	6FBB	3
1154	Great Britain	WWTP UK	3FBO	1
1153	Hungary	WWTP Ságvár	3FBO	1
1152	Hungary	WWTP Nagybajom	2FBO	1
1150-1151	Slovakia	WWTP Trenčianska Teplá	6FBB	2
1149	Slovakia	ÚV Hriňová	2FBB	1
1148	Czech Republic	WWTP Klíčany	2FBB	1
1146-1147	Lithuania	WWTP Noriunai and Subacius	2FBB	2
1145	Latvia	WWTP Riga	10_BMF_10_BK2	1
1144	Poland	Synthos Dwory	4FBO_R	1
1143	Poland	Synthos Dwory	4FBO	1
1142	Greece	WWTP Gortina Messara - Crete	5_BMF_10_O	1
1141	Czech Republic	WWTP Benátecká Vrutice	5FBO_R	1
1140	Lithuania	WWTP Kalvaria	4FBO_R	1
1138-1139	Slovakia	WWTP Trebišov	4FBB_L/R	2
1136-1137	Cyprus	WWTP Astromeritis	2FBB	2
1135	Great Britain	WWTP UK	2FBO_L	1
1134	Czech Republic	WWTP Velké Losiny	3FBB	1
1132-1133	Slovakia	WWTP Dubnica nad Vahom	6FBB_R/L_Z	2
1131	Czech Republic	WWTP Horní Němčí	1FBB	1
1130	Czech Republic	WWTP Velký Týnec	3FBB	1
1129	Czech Republic	WWTP Týniště nad Orlicí	6FBB	1
1128	Czech Republic	fish farm Ústí nad Labem	2FBO_L	1
1127	Czech Republic	DAP mine Nástup Tušimice	3FBO_R	1
1126	Great Britain	WWTP Goonhavern	3FBO	1
1125	Greece	WWTP Heraklion, Kréta	5_BMF_10_O	1
1124	Hungary	WWTP Tiszaalpár	2FBB_L	1
1119-1120	Norway	cruise ship	2FBO_atyp	2
1118	Portugal	WWTP Neiva	2FBO_R	1
1117	Portugal	WWTP Vila Mea	4FBO_L	1
1116	Portugal	WWTP Ovelha	4FBO_R	1
1115	Korea	WWTP Korea	1FBB_L	1
1114	Czech Republic	test unit	3FBO	1
1113	Czech Republic	WWTP Brodek u Prostějova	2FBO	1
1112	Russia	WWTP Arktik	1FBB_atyp	1
1110-1111	Czech Republic	WWTP Pec pod Sněžkou	3FBB_L/R	2
1109	Argentina	Capitan Bermudes	5FBO	1
1107-1108	Hungary	WWTP Mélykut	4FBB_L/R	2
1106	Czech Republic	Beskyd Cerekev	1FBB_L	1
1105	Russia	WWTP Machňová	2FBB	1
1104	Bangladesh	Paper mill	6FBO	1
1102-1103	Hungary	WWTP Bácsalmás	3FBB_L/R	2
1101	Great Britain	WWTP UK	3FBO	1
1100	Czech Republic	WWTP Náklo	1FBB	1
1099	Czech Republic	WWTP Křelov	1FBO_R	1
1098	Czech Republic	WWTP Prášily	5_BMF_5_B2	1
1097	Slovakia	WWTP Sládkovičovo	3FBB_R	1
1094	Czech Republic	WWTP CTP Bor u Tachova	5_BMF_10_B2	1
1093	Czech Republic	KOI ponds	2FBO_R	1

3172/18

1078	Poland	WWTP Tczów	3FBO	1
1074	Slovakia	Devínská Nová Ves	6FBB_L	1
TOTAL				69

ALL FOR WATER IN-EKO

YEAR 2013

No.	COUNTRY	PLACE OF INSTALLATION	TYPE	Pc.
1096	Czech Republic	ČS Thermal Pasohlávky	4FBO_R	1
1095	Germany	paper mill Metsa Tissue Düren	5FBO	1
1092	Portugal	WWTP Tondela	2FBO_L	1
1091	Great Britain	WWTP	4FBO	1
1090	Hungary	Iregszemcse	2FBO	1
1089	Bulgaria	WWTP	4FBB_R	1
1088	Great Britain	WWTP	2FBO_R	1
1087	Great Britain	WWTP	2FBO_R	1
1086	Hungary	WWTP Sandorfalva	5FBB_R	1
1085	Belarus	WWTP	5_BMF_5_B2	1
1083-1084	Norway	ship	3FBO_atyp	2
1082	Slovakia	WWTP Gbely	3FBB_R	1
1081	Czech Republic	WWTP Aero Vodochody	2FBB	1
1080	Slovakia	WWTP Zámutov	2FBO	1
1079	Czech Republic	WWTP Horní Vltavice	5_BMF_10_B2	1
1077	Czech Republic	Paper mill Aloisov	10_BMF_10_BK2	1
1076	Great Britain	WWTP	4FBO	1
1075	Slovakia	WWTP Volkswagen	4FBB_R	1
1073	Russia	WWTP	2FBB	1
1072	Slovakia	WWTP Čaklov	5_BMF_13_B2	1
1071	Czech Republic	SVK Buchlovice	2FBO	1
1070	Hungary	WWTP Fenekpustza	5_BMF_5_B2	1
1069	Great Britain	WWTP	6FBO	1
1067-1068	Great Britain	WWTP	4FBO	2
1066	Great Britain	WWTP	3FBO	1
1065	Estonia	WWTP	5_BMF_5_O	1
1064	Czech Republic	WWTP Panholec	1FBB_R	1
1062-1063	Russia	WWTP	5_BMF_5_B2	2
1061	Czech Republic	WWTP Žleby	1FBO_R	1
1060	Portugal	WWTP	4FBB_R	1
1059	Hungary	WWTP Cece	2FBO_R	1
1058	Great Britain	WWTP	4FBO	1
1057	Great Britain	WWTP	4FBO	1
1055-1056	India	Crown City	2FBO	2
1054	Czech Republic	WWTP Vítkovice	2FBO_R	1
1053	Slovakia	Žilina	2FBO_L	1
1052	Lithuania	WWTP Juseviciai	1FBO_L	1
1051	Portugal	WWTP	2FBO_R	1
1050	Greece	WWTP	4FBB_L	1
1049	Ireland	Errigal Seafood Donegal	3FBB	1
1048	USA	WWTP	5_BMF_5_O	1
1047	Czech Republic	WWTP Horní Jiřetín	5_BMF_10_B2	1
1046	Lithuania	WWTP Aleksandrija	5_BMF_10_B2	1
1045	Lithuania	WWTP Siluva	5_BMF_10_B2	1
1044	Lithuania	WWTP Lenkimai	5_BMF_10_B2	1
1042 - 1043	USA	WWTP	5_BMF_5_O	2
1041	Czech Republic	WWTP Kopidlno	5_BMF_10_B2	1

3/12/18

1039 - 1040	Czech Republic	Fish ponds	2FBO	2
1037 - 1038	Sweden	WWTP Spillepeng	4FBO	2
1036	Czech Republic	Plzen - Power plant	10_BMF_10_BK2	1
1035	Poland	Papermill Krapkowice	5FBO	1
1034	Great Britain	WWTP Carrowdore	4FBO_R	1
1033	Russia	WWTP Gornouralsk	3FBB	1
1032	Great Britain	WWTP	3FBO_R	1
1031	Austria	Fish Hatchery	4FBOR	1
1030	Great Britain	WWTP	3FBO_R	1
1029	Great Britain	WWTP	3FBO_R	1
1028	Liuthania	WWTP	5_BMF_5_B2	1
1027	Russia	WWTP	1FBB	1
1026	Slovakia	WWTP Sečovce	4FBB	1
1025	Turkey	Cloth factory Oztek	6FBB_L	1
1024	Niger	WWTP Ogba	6FBO	1
1023	USA	WWTP	5_BMF_5_O	1
1022	Italy	WWTP	3FBO_R	1
1021	Liuthania	WWTP	2FBB_atyp	1
1020	Czech Republic	WWTP Umyslovice	1FBB	1
1019	Italy	WWTP	5_BMF_10_BK2	1
1018	Izrael	Paper mill	4FBO	1
1017	Ukraine	WWTP	1FBO	1
1016	Czech Republic	WWTP Bánov	2FBB	1
1015	Great Britain	WWTP	2FBO_L	1
TOTAL				79

ALL FOR WATER IN-EKO

YEAR 2012

No.	COUNTRY	PLACE OF INSTALLATION	TYPE	Pc.
1012 - 1014	Czech Republic	University of South Bohemia, faculty of fisheries and protection of waters	1FBO	3
1011	Czech Republic	WWTP Brodek u Přerova	5_BMF_13_B2	1
1010	Lithuania	WWTP Šilgaliai	5_BMF_10_B2	1
1009	Lithuania	WWTP Vikiškiai	5_BMF_10_B2	1
1008	Great Britain	Union Papertech	6FBO	1
1007	Great Britain	WWTP	6FBO	1
1006	Turkey	Oztek - Turkey	6FBB	1
1005	Lithuania	WWTP Betygalos	5_BMF_5_B2	1
1004	Lithuania	WWTP Girkalnis	5_BMF_10_B2	1
1003	Czech Republic	Strážnické chips	1FBO	1
1002	Czech Republic	WWTP Dolní Němčí	3FBB_L	1
1000 -1001	Slovakia	Recycentrum Snina	1FBO_L/R	2
999	Slovakia	WWTP Sirk	1FBB_L	1
998	Czech Republic	WWTP Nový Malín	5_BMF_13_B2	1
997	Czech Republic	WWTP Chromeč	2FBO	1
995-996	Russia	WWTP Jugorsk	5FBB	2
994	Great Britain	WWTP	5FBO	1
990-993	Hungary	WWTP Bekecsaba	6FBB	4
989	Czech Republic	WWTP Slapy	2FBO	1
988	Czech Republic	Car park Prague - Bohdalec	1FBO	1
987	Czech Republic	WWTP Bohdanec	1FBO	1
986	Belarus	WWTP	10_BMF_10_BK2	1

3/12/18

985	Czech Republic	WWTP Nové Zámky	2FBO_R	1
983-984	Czech Republic	WWTP Nová Paka	4FBB	2
982	Great Britain	WWTP	5FBO	1
980-981	Germany	paper mill Mets Tissue Düren	4FBO	2
978-979	Great Britain	WWTP	5FBO	1
977	Lithuania	WWTP	2FBB	1
976	Czech Republic	WWTP Moravany	10_BMF_20_BK2	1
975	Slovakia	WWTP Revúca	6FBB_R	1
974	Lithuania	WWTP	5FBO_R	1
973	Italy	WWTP	4FBB	1
972	New Zeland	WWTP Tokoroa	6FBO	1
971	Russia	WWTP	3FBO	1
970	Lithuania	WWTP Sateikiai	5_BMF_10_B2	1
969	Lithuania	WWTP Alsedžiai	5_BMF_10_B2	1
968	South Korea	WWTP	4FBO	1
966-967	Czech Republic	WWTP Holíč	10_BMF_10_BK2	2
965	Lithuania	WWTP Kuliai	5_BMF_10_B2	1
964	Czech Republic	WWTP Halenkovice	2FBB	1
962-963	Czech Republic	WWTP Ivančice	5FBB	2
961	Lithuania	WWTP	5_BMF_5_O	1
960	Czech Republic	WWTP Stankovany	5_BMF_13_B2	1
959	Czech Republic	WWTP Tehov	5_BMF_5_O	1
958	Czech Republic	WWTP Hať	2FBB_R	1
957	Great Britain	WWTP	6_FBO	1
956	Russia	WWTP	5_BMF_5_B2	1
955	Portugal	WWTP	2FBO_L	1
954	Portugal	WWTP Yoca	4FBO_R	1
953	Portugal	WWTP Castelo Branco	3FBO_R	1
952	Czech Republic	testing IN-EKO	1FBO	1
951	Great Britain	WWTP	3FBO	1
950	Czech Republic	fish farm Vračovice	5_BMF_10_O	1
948-949	Russia	WWTP	2FBB_BK2	2
947	Slovakia	WWTP Malý Kamenec	1FBB_R	1
946	Slovakia	WWTP Cabaj – Čápor	5_BMF_10_B2	1
945	Czech Republic	fish farm Litomyšl	5_BMF5_B2	1
944	Great Britain	WWTP	3FBO	1
943	USA	WWTP	5_BMF_5_O	1
942	Czech Republic	WWTP Choustník	10_BMF_20_B2	2
941	Great Britain	WWTP	4FBO	1
937-940	Italy	WWTP Esia (Brescia)	6FBB	3
934-936	Italy	WWTP Fara Sabina (Rieti)	6FBB	3
933	Czech Republic	WWTP Kořenov	5_BMF_13_B2	1
930-932	Czech Republic	Synthos Kralupy	4FBO	3
928-929	Hungary	WWTP	10_BMF_10_B2	2
927	Slovakia	WWTP Východná	5_BMF_10_B2	1
926	Slovakia	WWTP Važec	5_BMF_10_B2	1
TOTAL				88

ALL FOR WATER IN-EKO **YEAR 2011**

No.	COUNTRY	PLACE OF INSTALLATION	TYPE	Pc.
923-925	Russia	WWTP	5FBO	3
922	Greece	WWTP	5_BMF_10_B2	1
921	USA	WWTP	5_BMF_10_O	1
920	Lithuania	WWTP Išorai	5_BMF_5_B2	1

3/12/18

919	Greece	WWTP	5_BMF_10_O	1
918	Czech Republic	WWTP Česká Třebová	6FBB	1
915-917	Russia	WWTP	5FBO	3
914	Germany	WWTP	4FBO	1
913	Germany	WWTP	5FBO	1
910-912	Germany	WWTP	5FBO	3
909	Russia	WWTP	5_BMF_5_B2	1
908	Great Britain	WWTP	3FBO	1
907	Czech Republic	WWTP Deštné v Orlických Horách	5_BMF_13_B2	1
906	USA	WWTP	5_BMF_5_O	1
905	Ireland	WWTP	1FBO	1
904	USA	WWTP	5_BMF_10_O	1
903	Czech Republic	WWTP Hoštky	5_BMF_5_B2	1
902	Lithuania	WWTP Linkuva	5_BMF_10_B2	1
901	Belarus	WWTP	5_BMF_5_B2	1
899-900	Poland	Krapkowice Paper mill	10_BMF_20_O	2
898	Czech Republic	WWTP Hrádkov	10_BMF_10_B2	1
896-897	Slovakia	WWTP Fiľakovo	10_BMF_10_B2	2
895	Poland	Fabryka Wagónow Gniewczyn	5_BMF_13_O	1
894	USA	WWTP	5_BMF_5_O	1
893	China	Hailar	5FBB	1
892	Italy	WWTP	4FBO	1
891	Czech Republic	WWTP Šanov	5_BMF_5_B2	1
887-890	Germany	industrial zone Riaydh	6FBB	4
886	Czech Republic	WWTP Dechtice	3FBO	1
885	Korea	WWTP	4FBO	1
884	Great Britain	WWTP	3FBO	1
883	Great Britain	WWTP	3FBO	1
882	Czech Republic	WWTP Škrdlovice	5_BMF_5_B2	1
881	Czech Republic	WWTP Chropyně	5_BMF_13_O	1
880	Poland	WWTP Rudiskas	3FBO	2
879	Poland	WWTP Niedzwiada	3FBO	1
878	Poland	WWTP Wohyn	3FBO	1
877	Czech Republic	WWTP Dolní Morava	5_BMF_5_B2	1
875-876	Greece	WWTP Thessaloniki	10_BMF_20_BK2	2
871-874	Czech Republic	WWTP Cheb	6FBB	4
870	Czech Republic	WWTP Oldřišov	1FBB	1
869	Slovakia	WWTP Východná	5_BMF_13_B2	1
868	Slovakia	WWTP Važec	5_BMF_13_B2	1
867	Czech Republic	WWTP Křenice	5_BMF_5_B2	1
866	Czech Republic	WWTP Slavonice	10_BMF_10_B2	1
864-865	Czech Republic	WWTP Velké Meziříčí	5FBB	2
863	Lithuania	WWTP	5_BMF_10_B2	1
862	Slovakia	WWTP Dúbrava	5_BMF_5_B2	1
861	Greece	WWTP	5_BMF_5_B2	1
859-860	Czech Republic	WWTP Moravská Třebová	4FBB	2
858	Slovakia	ČOV Sokolany	5_BMF_5_B2	1
857	Czech Republic	ČOV Zlatá Koruna	5_BMF_5_B2	1
856	Czech Republic	WWTP Korytná	5_BMF_13_O	1
855	Hungary	Dunastyr - Danube rafinery	2FBO	1
854	Great Britain	WWTP	2FBO	1
850-853	Russia	WWTP Nižnyj Tagil	5FBB	4
849	Lithuania	WWTP Akmene	5FBB	1
848	Czech Republic	WWTP Ejpovice	5_BMF_5_B2	1
847	South Korea	WWTP	2FBO	1
846	Slovakia	WWTP Tisovec	5_BMF_13_B2	1

3/12/18

844-845	Slovakia	WWTP Senica	6FBB	2
842-843	China	WWTP Chahaer	5FBB	2
841	Czech Republic	WWTP Deštná	10_BMF_10_B2	1
839-840	Italy	WWTP Melfi	10_BMF_20_O	2
837-838	Mexico	WWTP Polchuk	1FBO	2
835-836	Portugal	WWTP	10_BMF_25_BK2	2
833-834	Portugal	WWTP Pinhal Novo	10_BMF_25_O	2
832	Portugal	WWTP Montado	10_BMF_10_O	1
830-831	Belarus	WWTP	5_BMF_5_B2	2
829	Jordan	WWTP	5FBO	1
828	Jordan	WWTP	4FBO	1
826-827	Czech Republic	WWTP Broumov	6FBB	2
825	Poland	WWTP Paradysz	2FBO	1
824	Slovakia	WWTP Lubenik	5_BMF_10_B2	1
823	Great Britain	WWTP	2FBO	1
821-822	Mexico	WWTP Zacatepec	4FBO	2
TOTAL				106

ALL FOR WATER IN-EKO

YEAR 2010

No.	COUNTRY	PLACE OF INSTALLATION	TYPE	Pc.
820	Great Britain	WWTP	3FBO	1
819	Czech Republic	WWTP Patok	5_BMF_10_O	1
818	Great Britain	WWTP	3FBO	1
817	Russia	WWTP	5_BMF_5_B2	1
816	Czech Republic	WWTP Holešov	10_BMF_20_BK2	1
815	Portugal	WWTP	5_BMF_10_O	1
814	Lithuania	WWTP	10_BMF_10_B2	1
813	Great Britain	WWTP	2FBO	1
812	Great Britain	WWTP	10_BMF_10_O	1
811	Czech Republic	WWTP Kostelec nad Labem	5_BMF_13_B2	1
810	Czech Republic	WWTP Moravičany	5_BMF_10_B2	1
809	Portugal	WWTP	5_BMF_10_O	1
808	Portugal	WWTP	5_BMF_10_O	1
807	Czech Republic	WWTP Kroměříž	5_BMF_5_O	1
806	Great Britain	WWTP	10_BMF_10_O	1
805	Slovakia	WWTP Skalica	10_BMF_25_B2	1
804	Czech Republic	WWTP Břidličná	5_BMF_13_B2	1
803	USA	WWTP	5_BMF_5_O	1
802	Czech Republic	WWTP Hrotovice	5_BMF_13_B2	1
801	Slovakia	WWTP Bratislava	4FBB	1
799-800	Czech Republic	WWTP Uherský Brod	15_BMF_30_BK3	2
798	Great Britain	WWTP	5_BMF_10_O	1
796-797	USA	WWTP	5_BMF_10_O	1
795	Great Britain	WWTP	10_BMF_20_O	1
794	Ireland	WWTP	5_BMF_5_O	1
793	Poland	WWTP Krzyskowice	4FBO	1
792	Germany	WWTP	10_BMF_10_B2	1
790-791	Czech Republic	WWTP Police	10_BMF_20_BK2	2
784-789	China	WWTP	15_BMF_30_BK3	6
783	Czech Republic	WWTP Tupadly	5_BMF_10_B2	1
782	Czech Republic	WWTP Doloplazy	5_BMF_5_B2	1
781	Great Britain	WWTP	5_BMF_10_O	1
778-780	Czech Republic	WWTP Domažlice	10_BMF_20_B2	3
777	Czech Republic	WWTP Slušovice	10_BMF_10_B2	1

3172/98

776	Great Britain	WWTP	10_BMF_20_O	1
775	Italy	paper mill	10_BMF_20_O	1
774	USA	WWTP	5_BMF_10_O	1
773	Czech Republic	WWTP Mohelnice	10_BMF_20_BK4	1
772	Ireland	WWTP	5_BMF_10_O	1
770-771	Hungary	WWTP	15_BMF_30_BK3	2
769	Czech Republic	WWTP Vizovice	10_BMF_20_BK2	1
768	Romania	Comcech paper mill	10_BMF_20_O	1
767	Korea	WWTP	10_BMF_20_O	1
766	Czech Republic	WWTP Vlčnov	5_BMF_13_B2	1
765	Czech Republic	WWTP Nové Město nad Metují	10_BMF_25_BK2	1
764	Jordan	paper mill	10_BMF_25_B2	1
763	Czech Republic	WWTP Valašské Klobouky	10_BMF_20_B2	1
762	USA	WWTP	5_BMF_5_O	1
761		test unit	10_BMF_10_B2	1
760	Czech Republic	Fish nursery	10_BMF_10_O	1
759	Italy	WWTP	10_BMF_10_O	1
758	Czech Republic	WWTP Vilémov	5_BMF_5_O	1
757	Czech Republic	WWTP Mšené Lázně	5_BMF_13_B2	1
756	Netherlands	WWTP	5_BMF_10_O	1
755	Italy	WWTP	5_BMF_5_O	1
754	USA	WWTP	5_BMF_10_O	1
TOTAL				66

ALL FOR WATER IN-EKO

YEAR 2009

No.	COUNTRY	PLACE OF INSTALATION	TYPE	Pc.
753	Czech Republic	WWTP Linet	5_BMF_5_B2	1
752	Czech Republic	WWTP Střeň	5_BMF_5_O	1
751	Hungary	test unit	5_BMF_5_O	1
749-750	Argentina	papermill	10_BMF_20_O	2
748	Czech Republic	WWTP Třebotov	5_BMF_10_B2	1
746-747	Sweden	papermill	10_BMF_25_O	2
745	Czech Republic	WWTP Dolní Lhota	5_BMF_10_B2	1
744	Korea	WWTP	5_BMF_5_O	1
743	Czech Republic	WWTP Vilémov	5_BMF_5_O	1
742	USA	WWTP	5_BMF_10_O	1
741	Korea	WWTP	5_BMF_5_B2	1
740	Italy	WWTP	10_BMF_20_B2	1
739	Poland	WWTP Stroža	10_BMF_10_O	1
738	Poland	WWTP Wiazownica	10_BMF_20_O	1
732-737	China	WWTP Renqui	15_BMF_30_BK3	6
731	Great Britain	WWTP	10_BMF_10_O	1
728-730	China	WWTP Pingyi	15_BMF_30_BK3	3
727	Latvia	WWTP	10_BMF_10_B2	1
726	Czech Republic	WWTP Všetaty	5_BMF_5_O	1
725	USA	WWTP	10_BMF_10_O	1
724	Egypt	papermill	10_BMF_10_O	1
723	Great Britain	WWTP	10_BMF_10_O	1
722	Italy	WWTP	10_BMF_20_O	1
721	Kuwait	WWTP	10_BMF_10_B2	1
720	Netherlands	WWTP	10_BMF_25_BK2	1
719	USA	WWTP	5_BMF_5_O	1
718	Czech Republic	WWTP Huštěnovice	5_BMF_10_B2 plast	1
717	Czech Republic	WWTP Rokytnice	5_BMF_10_O	1

3/12/18

716	Czech Republic	WWTP Srní	5_BMF_10_B2	1
715	Hungary	vegetable factory	5_BMF_10_B2	1
714	Great Britain	WWTP	10_BMF_20_O	1
713	Czech Republic	WWTP Leopoldov	5_BMF_10_O	1
712	Czech Republic	WWTP Březolupy	5_BMF_10_B2	1
710-711	USA	WWTP	5_BMF_10_O	2
709	Portugal	WWTP	10_BMF_10_O	1
708	Portugal	WWTP	5_BMF_5_O	1
702-707	Iran	WWTP	15_BMF_30_B3	6
701	Czech Republic	WWTP Kvilda	5_BMF_5_B2	1
700	Czech Republic	WWTP Újezd u Val. Klobouk	5_BMF_5_B2	1
699	Italy	WWTP	5_BMF_10_O	1
698	Great Britain	WWTP	5_BMF_10_B2	1
697	Great Britain	WWTP	10_BMF_10_O	1
696	USA	WWTP	5_BMF_10_B2	1
695	USA	WWTP	5_BMF_5_O	1
693-694	USA	WWTP	5_BMF_5_O	2
692	Great Britain	WWTP	5_BMF_10_O	1
691	Czech Republic	Saint Gobain Vertex Litomyšl	10_BMF_10_O	1
690	Czech Republic	WWTP Ptice	5_BMF_5_B2	1
688-689	Great Britain	WWTP	10_BMF_20_O	2
686-687	Great Britain	WWTP	10_BMF_10_O	2
685	Czech Republic	WWTP Javorná	5_BMF_5_B2	1
684	Great Britain	WWTP	10_BMF_10_O	1
683	Czech Republic	WWTP Slavičín Hrádek	10_BMF_20_BK2	1
682	Great Britain	WWTP	10_BMF_10_O	1
681	USA	WWTP	10_BMF_20_O	1
680	Czech Republic	Agrimex P. Březany	5_BMF_10_B2	1
679	Great Britain	WWTP	10_BMF_10_O	1
TOTAL				75

ALL FOR WATER — IN-EKO — **YEAR 2008**

No.	COUNTRY	PLACE OF INSTALATION	TYPE	Pc.
678	Slovakia	MVE Veľké Kozmálovce	10_BMF_20_O	1
677	USA	WWTP	5_BMF_5_O	1
676	Czech Republic	WWTP Velehrad	5_BMF10_B2	1
672-675	China	WWTP Faku	15_BMF_30_BK3	4
671	Great Britain	WWTP	5_BMF_10_O	1
670	USA	WWTP	5_BMF_10_O	1
679	Great Britain	WWTP	5_BMF_10_B2	1
667-668	Greece	WWTP	5_BMF_5_B2	2
666	Great Britain	WWTP	10_BMF_10_O	1
665		exhibition	5_BMF_5_O	1
664	Greece	WWTP	10_BMF_20_B2	1
663	Czech Republic	WWTP Mikulov	10_BMF_25_O	1
662	Czech Republic	Power plant Komořany	5_BMF_5_O	1
661	Russia	WWTP	5_BMF_5_B2	1
660	Italy	WWTP	5_BMF_5_B2	1
659	Great Britain	WWTP	5_BMF_5_B	1
657-658	Great Britain	WWTP	10_BMF_20_O	2
656	Slovakia	WWTP Koktebeť	10_BMF_20_BK2	1
646-655	Italy	Trucazzano	15_BMF_30_BK3	10
645	Italy	Cappo Verde	5_BMF_5_O	1
644	Great Britain	WWTP	5_BMF_5_O	1

3/12/18

643	Czech Republic	WWTP Březno	5_BMF_10_B2	1
641-642	Portugal	WWTP	10_BMF_10_B2	2
640	Czech Republic	Saint Gobain Vertex Litomyšl	10_BMF_10_O	1
638-639	Belarus	WWTP	10_BMF_10_B2	2
637	Greece	WWTP	5_BMF_10_O	1
636	Slovakia	SHP Slavošovce	5_BMF_15_B2	1
635	Great Britain	WWTP	10_BMF_10_O	1
634	Netherland	WWTP	5_BMF_10_O	1
632-633	Greece	WWTP	15_BMF_30_BK3	2
631	Poland	WWTP Lusina	10_BMF_10_O	1
630	Great Britain	WWTP	10_BMF_20_O	1
629	Great Britain	WWTP	5_BMF_10_O	1
624-626	Ireland	WWTP	5_BMF_5_O	3
623	Poland	WWTP Slomniki	10_BMF_20_O	1
622	Czech Republic	WWTP Zbytiny	5_BMF_5_B2	1
619	Italy	WWTP	5_BMF_10_O	1
618	Italy	WWTP	10_BMF_25_O	1
617	Czech Republic	WWTP Dubenec	5_BMF_10_B2	1
616	Great Britain	WWTP	10_BMF_20_O	1
615	Korea	WWTP	5_MF_10_O	1
614	Great Britain	WWTP	10_BMF_20_O	1
612	Great Britain	WWTP	10_BMF_10_O	1
611	Serbia	WWTP Jánošík	5_BMF_5_B2	1
610	Slovakia	WWTP Bučina	5_BMF_5_B2	1
608-609	Great Britain	WWTP	10_BMF_10_O	2
606-607	Portugal	WWTP	10_BMF_20_O	2
604-605	Great Britain	WWTP	10_BMF_20_O	2
602-603	Great Britain	WWTP	10_BMF_10_O	2
601	Italy	WWTP Osnago	15_BMF_30_BK3	1
600	Czech Republic	WWTP Lukavice	10_BMF_20_B2	1
598-599	Czech Republic	WWTP Námestovo	15_BMF_30_BK3	2
597	Russia	WWTP	5_BMF_5_B2	1
596	Czech Republic	WWTP Písečná	5_BMF_5_O	1
595	Czech Republic	Krkonošské papírny	5_BMF_10_O	1
594	Tanzánie	WWTP	5_BMF_15_B2	1
593	USA	WWTP	10_BMF_20_B2	1
591-592	USA	WWTP	5_BMF_10_O	2
590	Czech Republic	WWTP Rousínov	10_BMF_10_B2	1
589	Czech Republic	WWTP Slavkov	10_BMF_25_BK2	1
TOTAL				**85**

ALL FOR WATER IN-EKO

YEAR 2007

No.	COUNTRY	PLACE OF INSTALATION	TYPE	Pc.
588	Ireland	WWTP	5_BMF_10_B2	1
587	Belarus	WWTP Belarus	5_BMF_5_B2	1
586	Czech Republic	WWTP Rápotice	5_BMF_5_B2	1
585	Great Britain	WWTP	10_BMF_20_O	1
584	Great Britain	WWTP	10_BMF_10_O	1
583	Poland	WWTP Wlosan	10_BMF_10_O	1
582	Greece	WWTP	5_BMF_10_O	1
580-581	Greece	WWTP	10_BMF_20_B2	2
579	Great Britain	WWTP	10_BMF_20_O	1
578	USA	WWTP	10_BMF_20_O	1
577	Russia	WWTP Pustoška	5_BMF_5_B2	1

3/12/18

576	Czech Republic	papermill Předklášteří	10_BMF_25_O	1
575	Belarus	WWTP	10_BMF_10_B2	1
574	Slovakia	WWTP Tek. Lužany	5_BMF_5_B2	1
573	Ireland	WWTP Stradone	5_BMF_5_O	1
571-572	Slovakia	papermill Harmanec	10_BMF_25_O	2
569-570	Greece	WWTP	10_BMF_10_B2	2
567-568	Slovakia	WWTP Vranov a. Topľou	10_BMF_20_BK2	2
565-566	Belarus	WWTP	10_BMF_10_B2	2
564	Great Britain	WWTP	10_BMF_10_O	1
563	Slovakia	WWTP Ličartovce	5_BMF_5_B2	1
562	Slovakia	WWTP Slavkov	5_BMF_5_O	1
561	Ibiza	WWTP	5_BMF_5_O	1
560	Greece	WWTP	10_BMF_10_B2	1
559	Chile	WWTP	10_BMF_20_BK2	1
558	Czech Republic	Hotel Klínovec	5_BMF_5_O	1
557	Belarus	Vitebsk	5_BMF_5_B2	1
556	Slovakia	Hermanec	10_BMF_10_O	1
555	Czech Republic	WWTP Libavá	5_BMF_5_O	1
554	Slovakia	WWTP Čačov	5_BMF_5_B2	1
553	Russia	WWTP Moskva	5_BMF_5_B2	1
552	Czech Republic	WWTP Pavlov	5_BMF_10_O	1
550-551	Italy	WWTP	15_BMF_30_BK3	2
549	Czech Republic	backery Hering	5_BMF_5_O	1
548	Czech Republic	Mine Tušimice	5_BMF_5_B2	1
547	Czech Republic	WWTP Jaroměř	15_BMF_30_BK3	1
545-546	Italy	WWTP	10_BMF_20_BK2	2
543-544	Ukrajina	WWTP	15_BMF_30_BK3	2
542	New Zeland	WWTP	10_BMF_20_O	1
541	Slovakia	WWTP Brezová	5_BMF_5_B2	1
540	Netherland	papermill	10_BMF_20_O	1
538-539	Slovakia	WWTP Tento	10_BMF_20_O	2
537	Czech Republic	WWTP Uherce	5_BMF_5_B2	1
535-536	Great Britain	WWTP	10_BMF_10_O	2
533-534	Great Britain	WWTP	5_BMF_10_O	2
532	USA	WWTP	10_BMF_10_O	1
531	Russia	WWTP Jekatěrinburg	5_BMF_5_B2	1
530	Slovakia	WWTP Kavečany	5_BMF_5_B2	1
528-529	Czech Republic	WWTP Rakovník	10_BMF_20_B2	2
527	Italy	WWTP	5_BMF_10_O	1
526	Czech Republic	WWTP Tehovec	5_BMF_5_B2	1
525	Czech Republic	WWTP Logistic Stříbro	5_BMF_5_B2	1
524	Czech Republic	WWTP Károv	5_BMF_5_B2	1
523	Great Britain	WWTP	5_BMF_10_O	1
522	Czech Republic	WWTP Moravský Krumlov	10_BMF_20_O	1
521	Great Britain	WWTP	10_BMF_10_O	1
520	Great Britain	WWTP	5_BMF_5_O	1
519-518	USA	WWTP	5_BMF_10_O	2
517-516	Slovakia	WWTP Piešťany	15_BMF_30_BK3	2
515	Great Britain	WWTP	5_BMF_10_O	1
514	Great Britain	WWTP	5_BMF_10_O	1
513	Great Britain	WWTP	5_BMF_10_O	1
512	Great Britain	WWTP	10_BMF_10_O	1
511	Great Britain	WWTP	10_BMF_10_O	1
510	Great Britain	WWTP	15_BMF_30_BK3	1
509	Italy	WWTP	5_BMF_10_O	1
508-506	Italy	WWTP	10_BMF_20_O	3

3/12/18

505	Italy	WWTP	5_BMF_5_O	1
504	Ireland	WWTP	5_BMF_10_O	1
TOTAL				85

ALL FOR WATER IN-EKO

YEAR 2008

No.	COUNTRY	PLACE OF INSTALATION	TYPE	Pc.
503	Italy	paper mill	10_BMF_25_O	1
501-502	Great Britain	WWTP	10_BMF_10_O	2
498-500	Great Britain	WWTP	5_BMF_10_O	3
497	Great Britain	WWTP	5_BMF_10_O	1
493-496	USA	WWTP	5_BMF_5_O	4
492	Great Britain	WWTP	10_BMF_10_O	1
491	Great Britain	WWTP	5_BMF_10_O	1
490	Great Britain	WWTP	10_BMF_10_O	1
488-489	Great Britain	WWTP	10_BMF_10_O	2
486-487	Czech Republic	WWTP Mojmírovce	10_BMF_10_B2	2
478-485	Italy	WWTP	15_BMF_30_BK3	8
477	Ireland	WWTP	5_BMF_10_O	1
476	Lithuania	WWTP	10_BMF_10_O	1
475	Poland	Leczno	10_BMF_20_O	1
474	USA	WWTP	5_BMF_10_O	1
473	USA	WWTP	5_BMF_10_O	1
471-472	Italy	WWTP	10_BMF_20_BK2	2
469-470	Great Britain	WWTP	10_BMF_20_O	2
468	Czech Republic	WWTP Vodochody, Straškov	5_BMF_15_B2	1
467	Great Britain	WWTP	5_BMF_10_O	1
466	Great Britain	WWTP	5_BMF_10_O	1
465	USA	WWTP	10_BMF_23_B3	1
464	Lithuania	WWTP	10_BMF_20_B3	1
462-463	Great Britain	WWTP	5_BMF_10_O	2
460-461	Great Britain	WWTP	5_BMF_10_O	2
459	Czech Republic	WWTP Uhy	5_BMF_5_O	1
458	Czech Republic	WWTP Předboj	5_BMF_5_B2	1
457	Great Britain	WWTP	5_BMF_5_O	1
456	Great Britain	WWTP	5_BMF_10_O	1
455	Czech Republic	WWTP Renštejn	5_BMF_5_O	1
454	Italy	WWTP	10_BMF_20_BK2	1
453	USA	WWTP	5_BMF_10_O	1
451-452	Greece	WWTP	5_BMF_5_O	2
450	Italy	WWTP	15_BMF_30_BK3	1
449	Great Britain	WWTP	5_BMF_10_O	1
448	Poland	WWTP Debno	10_BMF_25_BK2	1
447	Lithuania	Fish farm	10_BMF_20_B3	1
446	Czech Republic	WWTP Albeř,centre UK	5_BMF_5_O	1
445	Belarus	WWTP	5_BMF_5_O	1
444	Great Britain	WWTP	10_BMF_20_O	1
442-443	USA	WWTP	5_BMF_10_O	2
436-441	Italy	Colongo Al Serio Bregamo	15_BMF_30_BK3	6
433-435	Czech Republic	WWTP Příbram	10_BMF_20_B2	3
432	Great Britain	WWTP	10_BMF_10_O	1
431	Great Britain	WWTP	10_BMF_10_B2	1
430	USA	WWTP	5_BMF_5_O	1
429	Czech Republic	veneer mill	5_BMF_10_OA	1
428	Germany	Omega papier Wernshause	5_BMF_10_O	1

3/12/08

426-427	Great Britain	WWTP	5_BMF_10_O	1
422-425	USA	WWTP	5_BMF_5_O	4
421	Italy	WWTP	5_BMF_10_B2	1
420	Portugal.	WWTP	10_BMF_20_O	1
419	Great Britain	WWTP	5_BMF_10_O	1
418	Belarus	WWTP	10_BMF_10_BK2	1
416-417	Italy	WWTP	10_BMF_20_BK2	2
415	Czech Republic	Třebestovice	5_BMF_5_O	1
414	Czech Republic	WWTP	5_BMF_10_B2	1
TOTAL				**89**

ALL FOR WATER IN-EKO ITALY

YEAR 2005

No.	COUNTRY	PLACE OF INSTALATION	TYPE	Pc.
411-413	USA	WWTP	5_BMF_5_O	3
409-410	Great Britain	Welsh Water	10_BMF_20_O	2
408	Czech Republic	Vesuvius Ostrava	5_BMF_10_O	1
406-407	Belarus	WWTP	10_BMF_10_BK2	2
403-405	Czech Republic	WWTP Mariánské Lázně	10_BMF_20_B2	3
402	Ireland	WWTP	5_BMF_5_B2	1
401	Belarus	WWTP	10_BMF_10_BK2	1
400	Hungary	Cemical industries Borsodchem	10_BMF_20_B2	1
399	Greece	WWTP	5_BMF_10_B2	1
398	Italy	test unit	5_BMF_5_O	1
397	Hungary	WWTP	10_BMF_20_O	1
396	Great Britain	WWTP	5_BMF_10_O	1
394-395	Belarus	WWTP	5_BMF_5_B2	2
393	Great Britain	WWTP	10_BMF_20_O	1
392	Great Britain	WWTP	10_BMF_10_O	1
391	Great Britain	WWTP	10_BMF_10_O	1
390	Great Britain	WWTP	5_BMF_10_O	1
389	Belarus	WWTP	10_BMF_10_BK2	1
388	USA	WWTP	10_BMF_10_O	1
387	Czech Republic	Test unit	5_BMF_5_B2	1
386	Slovakia	WWTP Horné trhoviště	5_BMF_10_B2	1
384-385	Czech Republic	WWTP Kadaň	10_BMF_20_BK2	2
383	Ireland	WWTP	5_BMF_5_O	1
382	Great Britain	Test unit	5_BMF_5_O	1
381	Czech Republic	WWTP Benátky n. Jizerou	10_BMF_20_B2	1
380	Slovakia	TENTO a.s. Žilina	10_BMF_25_O	1
379	Slovakia	TENTO a.s. Žilina	10_BMF_10_O	1
378	Slovakia	WWTP Hella-Rakoľuby	5_BMF_10_B2	1
377	Poland	WWTP Kačinskij	5_BMF_10_O	1
376	Russia	WWTP	5_BMF_5_O	1
374-375	Czech Republic	WWTP Jirkov	10_BMF_25_BK2	2
372-373	USA	WWTP	5_BMF_10_O	2
368-371	USA	WWTP	5_BMF_5_O	4
367	Greece	WWTP	5_BMF_5_B2	1
366	Czech Republic	WWTP Jindřichov	10_BMF_20_B2	1
365	Brasil	WWTP	5_BMF_10_O	1
364	Ireland	WWTP	5_BMF_5_O	1
363	Italy	Cassano D´Adda	15_BMF_30_BK3	1
362	Slovakia	WWTP Oazis	5_BMF_5_B2	1
361	Germany	WWTP	5_BMF_10_O	1
360	Czech Republic	WWTP Sedlec	5_BMF_5_B3	1

3/12/18

359	USA	WWTP	10_BMF_10_O	1
357-358	Slovakia	WWTP Zvolen	15_BMF_30_BK3	2
356	Slovakia	Levice	5_BMF_10_O	1
355	Czech Republic	WWTP Trellleborg	5_BMF_10 –O	1
354	Czech Republic	Papermill Bělá a.s.	10_BMF_20_O	1
353	USA	Cortland farms	5_BMF_5_O	1
TOTAL				**61**

ALL FOR WATER IN-EKO

YEAR 2004

No.	COUNTRY	PLACE OF INSTALATION	TYPE	Pc.
351-352	Czech Republic	Tisová u Sokolova	10_BMF_10_O	2
348-350	Czech Republic	Duropack, Bupak pap.	10_BMF_20_OA	3
346-347	Algeria	Amguid, Teguentour	5_BMF_10_O	2
345	Czech Republic	Studenice u Vyškova	5_BMF_5_B2	1
344	Ireland	WWTP	5_BMF_5_O	1
343	Czech Republic	WWTP Ležáky	5_BMF_5_B2	1
335-342	Italy	WWTP	15_BMF_30_BK3	8
334	Slovakia	WWTP Mochovce	5_BMF_10_B2	1
332-333	USA	WWTP	5_BMF_10_O	2
331	Czech Republic	WWTP Škvorec	5_BMF_5_B2	1
323-330	Italy	Cassano D´Adda	15_BMF_30_BK3	8
322	Ireland	WWTP	5_BMF_5_O	1
321	Slovakia	WWTP	5_BMF_5_B2	1
320	USA	WWTP	5_BMF_10_O	1
318-319	Czech Republic	Papermill Bělá a.s.	10_BMF_20_B2A	2
317	Czech Republic	ČSPHM Cheb	5_BMF_5_B2	1
314-316	Chile	Fish farm	15_BMF_30_BK2	3
313	Czech Republic	Bontz Velká Dobrá	5_BMF_5_B2	1
312	Ireland	WWTP	5_BMF_10_B2A	1
311	Ireland	WWTP	5_BMF_10_B2	1
310	Czech Republic	WWTP Horní Studénky	5_BMF_5_B2	1
309	USA	WWTP	5_BMF_10_O	1
308	USA	WWTP	5_BMF_5_O	1
307	USA	WWTP	5_BMF_5_O	1
306	USA	WWTP	5_BMF_5_O	1
305	USA	WWTP	5_BMF_5_O	1
304	USA	WWTP	5_BMF_5_O	1
303	USA	WWTP	5_BMF_5_O	1
302	Czech Republic	Všechromy	5_BMF_5_B2	1
301	Czech Republic	WWTP Park klub Průhonice	5_BMF_5_B2	1
300	Great Britain	WWTP	10_BMF_10_B2	1
299	Slovakia	WWTP Klasov	10_BMF_20_B2	1
298	Italy	WWTP	10_BMF_20_BK2	1
297	Italy	WWTP	10_BMF_20_BK2	1
296	Ireland	WWTP	5_BMF_5_O	1
295	Czech Republic	WWTP	5_BMF_5_B2	1
294	Czech Republic	MUBEA Žebrák u Berouna	5_BMF_5_B2	1
293	Czech Republic	WWTP	5_BMF_10_B2	1
292		Test unit	5_BMF_10_B2	1
291	Chile	WWTP	10_BMF_20_O	1
288-290	Chile	WWTP	10_BMF_20_BK2	3
287	Chile	WWTP	15_BMF_30	1
286	Great Britain	WWTP	5_BMF_10_O	1
TOTAL				**67**

3/12/18

ALL FOR WATER IN-EKO

YEAR 2003

No.	COUNTRY	PLACE OF INSTALATION	TYPE	Pc.
285	Ireland	WWTP	5_BMF_5_O	1
284	Czech Republic	WWTP Trhový Štěpánov	5_BMF_10_B2	1
282-283	Slovakia	WWTP Zywiec	15_BMF_30_BK2	2
281	Czech Republic	WWTP Pavlikov	5_BMF_5_B2	1
280	Czech Republic	WWTP Květnice	5_BMF_10_B2	1
279	Slovakia	WWTP	5_BMF_5_O	1
278	USA	WWTP	5_BMF_10_O	1
277	USA	WWTP	10_BMF_10_O	1
276	Czech Republic	WWTP Ruzyně sever	10_BMF_10_OA	1
275	Ireland	WWTP	5_BMF_5_O	1
274	USA	WWTP	10_BMF_10_O	1
273	Belgium	WWTP	5_BMF_15_O	1
272	Czech Republic	Fish farm Petrův zdar	5_BMF_10_O	1
271	New Zeland	WWTP	5_BMF_5_O	1
270	Latvia	WWTP	5_BMF_10_B2	1
269	Czech Republic	Dřevobrus M.Mádle	10_BMF_20_O	1
268	Slovakia	WWTP Búč	5_BMF_5_B2	1
266-267	Italy	WWTP	10_BMF_20_BK2	2
265	Latvia	WWTP	5_BMF_10_O	1
264	Ireland	WWTP	5_BMF_5_O	1
260-263	USA	WWTP	5_BMF_5_O	4
259	USA	WWTP	5_BMF_10_O	1
258	Czech Republic	WWTP Blatnice	5_BMF_5_B2	1
257	Slovakia	WWTP Búč	5_BMF_5_B2	1
256	Greece	WWTP	5_BMF_10_B2	1
TOTAL				30

ALL FOR WATER IN-EKO

YEAR 2002

No.	COUNTRY	PLACE OF INSTALATION	TYPE	Pc.
255	Czech Republic	WWTP Morkovice - Slížany	5_BMF_10_O	1
254	New Zeland	WWTP	10_BMF_20_B2	1
253	Czech Republic	WWTP Lhota u D. Březan	5_BMF_5_B2	1
251-252	Slovakia	WWTP Malacky	10_BMF_20_B2	2
250	Czech Republic	WWTP Tábor	10_BMF_20_B2	1
249	USA	WWTP	5_BMF_10_O	1
248	Kuwait	WWTP	5_BMF_5_B2 A	1
247	Czech Republic	WWTP	5_BMF_10_O	1
246	Belarus	WWTP	5_BMF_10_B2	1
245	Ireland	WWTP	5_BMF_10_O	1
244	Poland	WWTP	10_BMF_20_OA	1
243	Slovakia	WWTP Levice	5_BMF_5_B2	1
242	Belgium	Van Roosmalen	10_BMF_20_OA	1
241	Czech Republic	ČEZ Počerady	10_BMF_20_OA	1
239-240	Canada	WWTP	5_BMF_10_B2	2
237-238	Czech Republic	WWTP Uničov	10_BMF_20_BK2	2
236	Czech Republic	WWTP Vyškov	15_BMF_30_BK2	1
235	Czech Republic	WWTP	5_BMF_5_B2	1
234	Czech Republic	Kaufland Modletice	5_BMF_10_B2	1
229-233	Slovakia	WWTP Lučenec	10_BMF_20_B2	5

3/72/98

228	USA	WWTP	10_BMF_20_O	1
224-227	Czech Republic	WWTP Uherské Hradiště	10_BMF_20_BK2	4
223	Czech Republic	WWTP Řehlovice	5_BMF_5_B2	1
TOTAL				**33**

ALL FOR WATER IN-EKO

YEAR 2001

No.	COUNTRY	PLACE OF INSTALATION	TYPE	Pc.
221-222	Czech Republic	Papermill Bělá a.s.	10_BMF_20_O	2
219-220	USA	WWTP Florida	10_BMF_20_O	2
218	Slovakia	WWTP Kamenec	5_BMF_5_O	1
217	Chile	WWTP	10_BMF_20_BK2	1
214-216	Chile	Fish farm	15_BMF_30_B2	3
213	Slovakia	WWTP	5_BMF_10_B2	1
212	Slovakia	WWTP Bánská Bystrica	10_BMF_20_O	1
211	Belgium	WWTP	10_BMF_10_O	1
208-210	Czech Republic	WWTP Klatovy	10_BMF_20_B2	3
207	Czech Republic	WWTP Kdyně	10_BMF_10_B2	1
204-206	USA	WWTP	5_BMF_5_O	3
196-203	Chile	Fish farm	15_BMF_30_BK2	8
195	Czech Republic	Vodňany	5_BMF_10_B2	1
194	Chile	WWTP	10_BMF_20_BK2	1
193	Czech Republic	TEBO a.s. Nová Včelnice	5_BMF_10_B2	1
192	Greece	WWTP	10_BMF_20_B2	1
191	Italy	WWTP	10_BMF_20_BK2	1
190	Czech Republic	WWTP Kvasiny	10_BMF_10_O	1
189	Czech Republic	WWTP Kvasiny	5_BMF_10_O	1
184-188	Italy	WWTP	10_BMF_20_BK2	5
183	Czech Republic	Tonaso Neštěmice	5_BMF_10_O	1
179-182	Italy	WWTP Benevento	10_BMF_20_BK2	4
178	Czech Republic	WWTP	5_BMF_5_B2	1
177	Czech Republic	WWTP Lochkov	5_BMF_5_B2	1
176	Belgium	WWTP	5_BMF_10_B2	1
175	Czech Republic	Glazura s.r.o.	10_BMF_20_O	1
174	Chile	Fish farm	10_BMF_20_B2	1
172-173	Hungary	WWTP	5_BMF_5_O	2
170-171	Hungary	WWTP	10_BMF_20_BK2	2
169	Slovakia	VW Bratislava	10_BMF_20_BK2	1
168	Hungary	Fish farm	5_BMF_10_B2	1
167	USA	WWTP	10_BMF_20_O	1
166	Greece	WWTP	10_BMF_20_B2	1
165	Czech Republic	JIP CEREPA	10_BMF_20_O	1
164	Czech Republic	Test unit	5_BMF_5_B2	1
159-163	Belgium	Van Roosmalen	10_BMF_20_OA	5
TOTAL				**64**

ALL FOR WATER IN-EKO

YEAR 2000

No.	COUNTRY	PLACE OF INSTALATION	TYPE	Pc.
158	Chile	WWTP	10_BMF_20_O	1
156-157	Czech Republic	WWTP Hranice	10_BMF_20_BK2	2
155	Italy	WWTP	10_BMF_10_BK2	1
154	Czech Republic	Aktiva a.s.	10_BMF_20_B2	1
153	Czech Republic	Test unit	5_BMF_5_B2	1

3/12/98

152	Slovakia	WWTP	5_BMF_5_O	1
151	Slovakia	WWTP	5_BMF_10_B2	1
150	Slovakia	WWTP, VAC Horná Streda	5_BMF_5_O	1
149	Czech Republic	Podvorov	5_BMF_5_B2	1
148	Russia	WWTP	10_BMF_20_B2	1
147	Chile	Fish farm	5_BMF_10_B2	1
146	Czech Republic	WWTP Vyšní Lhota	5_BMF_10_B2	1
145	Czech Republic	WWTP Štity	5_BMF_5_B2	1
144	Czech Republic	DROXI Všechromy	5_BMF_5_B2	1
143	USA	WWTP	5_BMF_10_O	1
142	Slovakia	TENTO a.s.	10_BMF_20_O	1
141	Czech Republic	WWTP Losiná	10_BMF_20_O	1
140	Czech Republic	Fruta Podivín	5_BMF_10_O	1
139	Czech Republic	WWTP Salvátor	5_BMF_10_B2	1
138	Czech Republic	Sladovny Nymburk	10_BMF_10_O	1
130-137	Slovakia	Kappa Štůrovo	10_BMF_20_BK2	8
129	Italy	Montauro	10_BMF_20_BK	1
128	Slovakia	WWTP	5_BMF_5_B2	1
127	Slovakia	Matador Púchov	10_BMF_20_B2	1
126	USA	WWTP Kicking Horse	5_BMF_5_O	1
125	Czech Republic	WWTP Mikulovice	5_BMF_10_B2	1
119-124	USA	WWTP	5_BMF_5_O	6
117-118	Italy	Solver	5_BMF_10_BK2	2
116	Czech Republic	ZOO Lešná	10_BMF_20_BK2	1
115	Italy	Sardinia	10_BMF_20_BK2	1
114	Poland	Spólka	5_BMF_10_B2	1
110-113	Italy	WWTP	10_BMF_10_BK2	4
109	Italy	Rameno	5_BMF_5_O	1
107-108	USA	Kentucky	5_BMF_5_O	2
106	Czech Republic	WWTP Křimice	5_BMF_10_B2	1
TOTAL				**52**

ALL FOR WATER IN-EKO TEAM

YEAR 1999

No.	COUNTRY	PLACE OF INSTALATION	TYPE	Pc.
105	Poland	WWTP	5_BMF_10_B2	1
103-104	Slovakia	Kappa Štůrovo	10_BMF_20_BK2	2
102	Czech Republic	Master foods (MARS)	5_BMF_10_O	1
101	Czech Republic	WWTP Citov	10_BMF_10_B2	1
100	Czech Republic	VÚRH Vodňany	5_BMF_10_O	1
99	Czech Republic	PSW Warta	10_BMF_20_B2	1
98	Czech Republic	Glawerber Kryry	5_BMF_10_O	1
97	Czech Republic	WWTP Horní Počernice	10_BMF_10_O	1
96	Czech Republic	Vertex a.s. Litomyšl	10_BMF_10_B2	1
95	Czech Republic	ONO pump station	5_BMF_5_B2	1
94	USA	Kentucky	5_BMF_5_O	1
93	Slovakia	WWTP	5_BMF_5_B2	1
92	Greece	WWTP	5_BMF_5_B2	1
91	Slovakia	Košická Nová Ves	5_BMF_5_B	1
89	Czech Republic	Klínovec, hotel Nástup	5_BMF_5_B2	1
88	Czech Republic	Poděbradka s.r.o.	5_BMF_10_BA	1
87	Czech Republic	WWTP Přeštice	10_BMF_20_B2	1
86	Czech Republic	Hotel Arnika	5_BMF_5_O	1
85	Czech Republic	Univ. of South Bohemia, RIFCH	5_BMF_10_B2	1
84	Czech Republic	Splintex Bílina	5_BMF_10_O	1

3/12/18

80-83	Italy	WWTP	10_BMF_20_B	4
78-79	Italy	WWTP	10_BMF_20_B	2
77	Czech Republic	Česká Kubice	5_BMF_5_O	1
76	Czech Republic	Folmava	5_BMF_5_O	1
75	Czech Republic	WWTP Milevsko	10_BMF_20_B2	1
74	Slovakia	VW ES Nitra	5_BMF_5_O	1
73	Italy	WWTP	10_BMF_20_BK2	1
71-72	Czech Republic	WWTP Klokoty, Tábor	10_BMF_20_B2	2
TOTAL				**34**

ALL FOR WATER IN-EKO

YEAR 1998

No.	COUNTRY	PLACE OF INSTALATION	TYPE	Pc.
70	Italy	WWTP	10_BMF_10_O	1
69	Slovakia	Matador Púchov	10_BMF_20_B2	1
68	Slovakia	WWTP	5_BMF_5_O	1
67	Czech Republic	HYBE, pump station	5_BMF_5_B2	1
66	Italy	WWTP	10_BMF_20_B2	1
64-65	Poland	WWTP Sziersza	10_BMF_20_B2	2
63	Poland	WWTP	5_BMF_10_O	1
62	Slovakia	WWTP	5_BMF_10_O	1
60	Czech Republic	WWTP Bohutín	5_BMF_10_B	1
59	Czech Republic	WWTP	5_BMF_5_O	1
58	Poland	EXPRIM	5_BMF_10_B	1
57	Czech Republic	Hanácké závody Brodek u Prostějova	5_BMF_5_B	1
56	Italy	ČOV Brodek u Prostějova	5_BMF_10_O	1
55	Czech Republic	ZOO Lešná	5_BMF_10_B	1
54	Czech Republic	WWTP Jedivnice	10_BMF_10_O	1
53	Slovakia	Bory	5_BMF_10_O	1
52	Italy	WWTP	5_BMF_10_O	1
51	Czech Republic	Dairy Kunín	5_BMF_5_B	1
49-50	Czech Republic	WWTP Prachatice	10_BMF_20_B	2
48	Czech Republic	OMYA	5_BMF_5_B	1
47	Russia	WWTP	5_BMF_5_B	1
41-46	Italy	Argentario	10_BMF_20_B	6
TOTAL				**29**

ALL FOR WATER IN-EKO

YEAR 1997

No.	COUNTRY	PLACE OF INSTALATION	TYPE	Pc.
46	Czech Republic	Fish farm, Pohořelice	5_BMF_10_O	1
45	Slovakia	Trenčín	5_BMF_10_O	1
44	Czech Republic	Rantep Jeseník	10_BMF_10_B	1
43	Slovakia	WWTP Žilina	5_BMF_10_O	1
42	Slovakia	Motorest Styl, Senec	5_BMF_5_B	1
41	Czech Republic	WWTP	5_BMF_10_O	1
40	Czech Republic	Bohemia a.s.	10_BMF_10_O	1
38-39	Czech Republic	mine Kateřina	10_BMF_20_O	2
36-37	Czech Republic	WWTP Citice	5_BMF_10_O	2
30-35	Italy	Campodenno	10_BMF_20_B	6
29	Czech Republic	Tlučná	10_BMF_10_B2	1
28	Slovakia	WWTP Rimavská Sobota	10_BMF_20_B	1
27	Czech Republic	WWTP Kostelec n. L.	5_BMF_10_B	1
26	Czech Republic	WWTP Třebíč	10_BMF_20_B	1

3/12/18

25	Czech Republic	WWTP Červená n. Vlatvou	5_BMF_5_B	1
24	Czech Republic	WWTP Ruzyň jih	10_BMF_10_O	1
23	Czech Republic	Univ. of South Bohemia, RIFCH	5_BMF_10_O	1
22	Czech Republic	WWTP	5_BMF_5_O	1
21	Poland	WWTP Nowa Debia	10_BMF_20_O	1
19-20	Italy	Mezzocorona	10_BMF_20_O	2
TOTAL				**28**

ALL FOR WATER IN-EKO TEAM

YEAR 1996

No.	COUNTRY	PLACE OF INSTALATION	TYPE	Pc.
17-18	Czech Republic	WWTP Třebíč	10_BMF_20_B	2
16	Czech Republic	Telč	5_BMF_5_O	1
15	Slovakia	Hotel Transpetrol Račková Dolina	5_BMF_5_O	1
14	Russia	WWTP	5_BMF_5_O	1
13	Czech Republic	WWTP Ruzyně sever	10_BMF_10_O	1
12	Slovakia	WWTP Šemša	5_BMF_10_O	1
11	Czech Republic	WWTP Dobrovice	5_BMF_10_B	1
10	Czech Republic	Fish farm Hodonín	5_BMF_10_O	1
9	Czech Republic	WWTP	5_BMF_10_O	1
TOTAL				**10**

ALL FOR WATER IN-EKO TEAM

YEAR 1995

No.	COUNTRY	PLACE OF INSTALATION	TYPE	Pc.
8	Russia	WWTP Krym	5_BMF_5_O	1
7	Italy	WWTP Follonica	5_BMF_5_O	1
6	Italy	WWTP Mezzolago	10_BMF_20_B	1
5	Czech Republic	WWTP Libušín	5_BMF_10_O	1
4	Czech Republic	WWTP Pastviny	5_BMF_5_O	1
3	Czech Republic	WWTP Klíčany	5_BMF_10_O	1
2	Czech Republic	WWTP Povrly	10_BMF_20_O	1
1	Czech Republic	Fish farm Mokřiny	5_BMF_10_O	1
TOTAL				**8**

IN-EKO TEAM s.r.o.
Trnec 1734
666 03 Tišnov, Czech Republic
www.in-eko.com

ISO 9001 BUREAU VERITAS Certification

3/12/18

7. UV DISINFECTION UNIT - EFFLUENT

31/12/18

ULTRAAQUA

UV DISINFECTION SYSTEMS

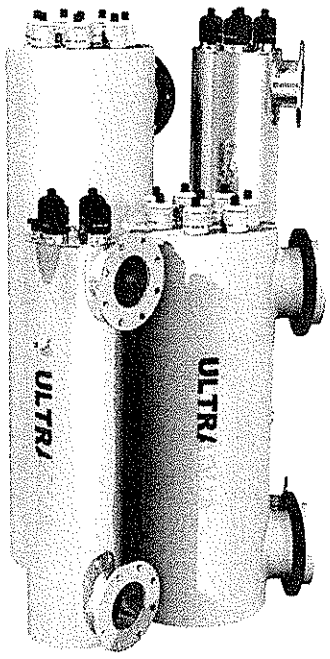

PROPOSAL FOR UV-DISINFECTION SYSTEM

UV-SYSTEM:	MonoRay 16-220 SS Channel
Company:	**KARKANIAS SA**
PROJECT:	WWTP DANILOVDRAD MONTENEGRO
APPLICATION:	Channel UV-disinfection
DATE	30-08-17

ULTRAAQUA A/S • Tarmvej 7 • 9220 Aalborg Ø • Denmark Phone: (+45) 70 23 10 20 • www.ultraaqua.com • E-mail: ultraaqua@ultraaqua.com

31/12/18

ULTRAAQUA COMPANY

Ultraaqua has been leading manufacturer of UV-disinfection systems for more than 25 years.
Ultraaqua's design team employs dedicated scientists and engineers with research careers of the highest academic level and many years of experience in design and operation of water treatment facilities.
The application expertise by our sales teams ensure correct model selection and sizing. Engineering and design group provide unmatched operation performance with regard to both disinfection efficency and life cycle cost.
Uncompromized product quality results in very long life time even in harsh and corrosive environments. High product quality and performance efficiency goes hand in hand with all major international standards such as CE, UL, DVGW, ÖNORM. High quality is also reflected in the fact that Ultraaqua warrant all products two years.
Ultraaqua is represented globally. UV-systems have been installed in more than 100 countries in a broad range of applications.

ULTRAAQUA MAJOR BENEFITS

Years of intensive research and and product optimization has resulted in superior market leading performance.
All UV-systems are designed, manufactured and tested in Denmark.
Most important features related to quoted UV-system:

- More than 15 years experience with open channel UV-systems
- Reactor in electro-polished AISI316L stainless steel
- ECOTEC electronic lamp driver technology
- Advanced LPHO amalgam UV-lamps
- 16000 hours lamp life time
- Full UV-Lamp and system state control
- Optional channel type UV-sensor
- Two years warranty from start up

QUOTED UV SYSTEM

Application data and calculated UV-dose from performance model simulation is seen in following table.
Please note that Ultraaqua UV-dose calculation is always done based on radiation emission data for used UV lamps.

Quoted UV system		MonoRay 16-220 SS Channel
Design flow rate	M3/h	108,0
Design UV transmittance pr 10 mm, UVT	%	70
Design UV dose, EOLL	mJ/cm2	> 85
Calculated UV dose, EOLL	mJ/cm2	86,3

3/12/18

TECH NOTES

UV-dose in mJ/cm2 can be calculated by dividing J/m2-value with 10.
UV-dose in µWs/cm2 can be calculated by multiplying J/m2-value with 100.

UV transmittance or UVT is a measurement of the amount of ultraviolet light at 254 nm that passes through a water sample compared to the amount of light that passes through a pure water sample. The measurement is expressed as a percentage, % UVT. UVT can vary over time and from site to site as it is related to the quantity of organics, colloidal solids and other material in the water which absorb the UV light as it passes through the water column. The effective UV dose is dependent primarily on the combined effects of the UV light intensity, the exposure time and the UVT. Always consult Ultraaqua specialist if in doubt about specific UVT values. Different pathogens require different amounts of UV energy to inactivate them. Therefore, for any UV system, it must be clear which pathogens are to be inactivated. The UV dose required to achieve different log removals of pathogens vary. For example to achieve 99% removal (log 2) removal of Cryptosporidium requires approx 60 J/m2. To achieve 4-log removal (99.99% removal) requires 220 J/m2 (under laboratory conditions). It is important to note that the relationship between the dose and the log removal, the so called dose response, is not linear. It takes a very much higher dose to achieve log-4 removal compared to log-2 removal. Please also note that parasites and especially virus in general require higher UV-doses compared to bacteria such as E.coli.

WARRANTY

Ultraaqua UV-systems are warranted for 2 years. The warranty covers reactors, mechanical parts and electrical components. Excludes consumable spares & labour. Warranty cover material properties, but it exclude damage as a result of corrosion. It is buyers responsibility that material component properties match operating conditions.

3/12/18

ADDITIONAL SALES TERMS

All our deliveries and services are exclusively subject to our General Terms of Delivery, which are available under http://www.ultraaqua.com/support/terms-and-conditions/ and which we will also transmit to you upon request. Any implied or statutory warranty, including the warranty of fitness for a particular purpose, is excluded to the extent permitted by applicable law. You are solely responsible to check, whether the products are suited for the intended use, in particular whether the products can be operated in your system and whether the desired results will be achieved. Ultraaqua assumes unlimited liability for claims under the Danish Product Liability Act, for claims which are based on fraudulent misrepresentation or wilful intent, and in cases where a liability of Ultraaqua cannot be excluded under mandatory law. In all other cases, the total liability of Ultraaqua for the customer's claims for damages is limited to the order value. Ultraaqua shall under no circumstances be liable for any loss of profit, any indirect, special or consequential loss or damage, costs, expenses or other claims for consequential compensation whatsoever, arising out of or in connection with this purchase order. Any implied or statutory warranty, including the warranty of fitness for a particular purpose, is excluded to the extent permitted by applicable law. You are solely responsible to check, whether the products are suited for the intended use, in particular whether the products/systems can be operated in your system and whether the desired results will be achieved.

3/12/18

2

ULTRAAQUA OPEN CHANNEL UV-SYSTEM SPECIFICATIONS MR16-220SS AISI316L

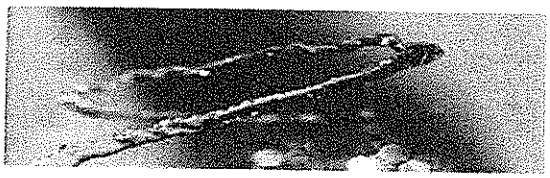

ULTRAAQUA

ULTRAAQUA A/S
Tårnvej 7
9220 Aalborg Ø, Denmark

WWW.ULTRAAQUA.COM

Design and dimensioning have been based upon numerous tests, screening of every relevant scientific publication and lots of experiences from several hundred high flow UV-systems installed worldwide.

UV-dose:
The UV system is designed to deliver effective UVC doses calculated using peak flow rates and conservative estimates for water UVT. Doses are calculated at end of lamp life time and after reductions for limited quartz sleeve fouling.
This channel UV-system is equipped with automatic quartz sleeve cleaning system and UV-intensity monitoring.
Lamp life-time is 16000H.

UV-Lamp bank/reactor:
The reactor is made of high quality stainless steel AISI316L. The reactor is designed for very low head loss. It can be installed either vertically or vertically angled to fit lower water depths. Please remember that due to the length of the UV-lamp one meter service area is needed above. The reactor is equipped with overheat protection.
Options include:

- Water level control
- Water flow guide plates
- UV-intensity sensor
- Automatic cleaning system

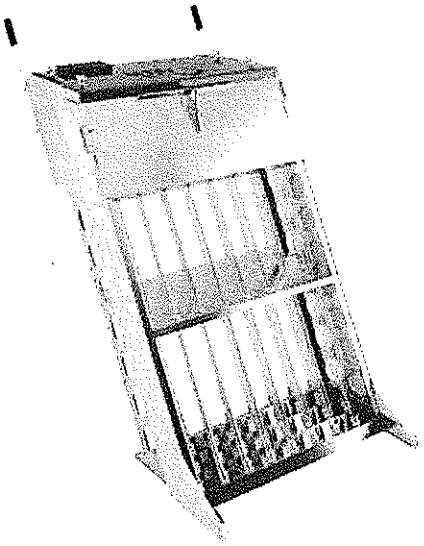

Lamp bank shown with tilted configuration

Service work incl. quartz sleeve and UV-lamp replacement is done without the need of any tools. Quartz sleeves can be cleaned in a few minutes. Quarts sleeves are typically cleaned every 6-12 months.

Control cabinet:
Cabinet is designed for installation in industrial environments. Standard enclosure material is GFRP. It has a user-friendly touch display for easy access to settings and performance data.
Control of lamp start and switch off as well as system state can be remotely controlled/monitored as standard. SCADA via MODBUS is optional.

Both reactor and control cabinet can be customized to fit almost any requirements.

Please contact ULTRAAQUA or representative for more information.

3/12/18

Specifications

Ultraaqua UV-system	MR16-220 SS Channel
Reactor units	
Reactor material	AISI316L
Minor parts materials	PTFE/PVDF/VITON/POM
Reactor configuration	1 bank with 16 lamps each vertically installed
Channel widths	604 +/-8,0mm
Water level, min / max	1120/1400 mm
Max head loss @ 1000 m3/h	35 mm
Guide plate for hydraulic control	Yes
Temperature sensor	Danfoss pT100
Dimensional drawings	Upon request
Manufactured in	Denmark
UV lamps	
Lamp type	Low pressure high output amalgam
Lamp power pr. lamp	220W
Number of UV-lamps	16
Lamp lifetime	16000H
Wire coating	PTFE
Manufactured in	Germany
Lamp drivers (ballasts)	
No of drivers pr. system	4
Product	4x220W UltraAqua 220W series
Type	Electronic HF modbus controlled
Serial communication	Modbus Daisy chain RJ45 wiring
Power Factor	> 0.98
Efficiency	95% at nominal power
Continuous monitoring	Individual electrical lamp parameters
Protection	Ground fault, temperature, input voltage
On-board diagnosis	LED indicators
Manufactured in	Holland
Control cabinet	
Material	GFRP (optional Stainless steel AISI304)
HMI	3.4" touch sensitive menu driven screen
System control	PLC
Installation	Wall mount
Cabinet dimension	700x500x300mm
Lamp cable length	5,0m (max length 30,0m)
Lamp cable type	Silicon acc. UL Style 4476 and CSA AWM II A/B
Power supply	3x400VAC+N+Pe,47-63 Hz
Power	3,9 kW @ 100% power level
Temperature	0-45 °C
Thermal control	Forced cooling
Rel. humidity	20-95% non-condensing
Enclosure type	IP54 (Optional IP55-IP68)
Approval	CE
Manufactured in	Denmark
Control features	
Lamp dimming	60-100% (UV-dose)
Lamp state indication	Individual
Accessible information	Reactor temperature
	Lamp hour
	Individual lamp state

31/12/18

	Individual lamp driver state
	Individual lamp electrical data
	Individual lamp driver temperature
	Individual lamp driver power input
	Remote control state
	Wiper system state (opt)
	Cleaning cycles (opt)
	UV-intensity (opt)
Alarms	Reactor temp. pre- and main
	Cabinet temperature
	Lamp state pre- and main
	Lamp driver state pre- and main
	UV-intensity pre- and main (opt)
	Wiper system (opt)
Digital inputs	Remote ON/OFF
Digital outputs	Main alarm
	Lamps ON signal
Analog output (4-20 mA)	UV-intensity (opt)
Optional intensity sensor	
No of sensors	1
Type	Digital silicium carbide vertically mounted
Manufactured in	Germany
Optional fully automatic quartz sleeve wiping system	
Wiper rings	Long life PTFE
Motor type	Integrated servo
Service feature	Full access to UV-lamps and quartz sleeves without dismantling wiper system
Optional water level control	
Type	Level switch
Material	AISI316L

Manufacturer:
All Ultraaqua UV-systems are manufactured by ULTRAAQUA A/S in Denmark using the stringiest quality measures.

Warranty:
2 years from date of invoice.

(SPECIFICATIONS ARE SUBJECT TO CHANGE)

3/12/18

Έργο: Ημερ/νία: 2017-09-06
Αριθμός Έργου: Συντάκτης:

wilo

Τεχνικά στοιχεία

Υποβρύχια αντλία λυμάτων Rexa PRO V05 DA-222 / EAD1X2-T0025-540-O

Αντλία							
Τύπος αντλίας		PROV05 D A - 222		Είδος εγκατάστασης		Suspension device DN50 DN50/2RK	
Πτερωτή (διάμ.)	Μέγ. Δυνατή	110	mm				
	Τυπικό (βασικό)	110	mm	Ελεύθερο πέρασμα		50	mm
	Σχεδιασμ.	110	mm	Στόμιο αναρ.	Βαθμ. PN	PN10	
	Ελάχ. Δυνατή	110	mm		Ονομ. διάμ.	DN50	
Ονομαστ. αριθμός στροφών		2900	1/min		Πρότυπο	WILO-S	
Συχνότητα		50	Hz	Στόμιο κατάθλ.	Βαθμ. PN	PN10	
Τύπος πτερωτής		Πτερωτή Vortex			Ονομ. διάμ.	DN50, Size 2, Rp2	
Κατασκευή πτερωτής		Ανοικτό			Πρότυπο	WILO-D	

Βάρη				
Βάρος υδραυλ. τμήματος αντλίας	Μέγ. 13,8	kg	Βάρος συγκροτήματος	Μέγ. 47,8 kg
Βάρος κινητήρα	34	kg		

Υλικά κατασκευής			
Κέλυφος αντλίας	EN-GJL-250		
Πτερωτή	EN-GJL-250		
Κέλυφος κινητήρα	EN-GJL-250		

Κινητήρας					
Ονομασία κινητήρα	P 13.1-10/EAD1X2-T-L01		Αριθμός πόλων	2	
Ονομ. ισχύς	2,5	kW	Ονομαστ. ταχύτ. Περιστροφής	2848	rpm
Απορρόφηση ισχύος σε Ονομ. ισχύ				3,2	kW
Ονομ. τάση				400 ~3	V
Απορρόφ. ρεύματος στην ονομ. ισχύ				5,5	A
Βαθμός απόδ. στην ονομ. ισχύ				78,6	%
συνφ στην Ονομ. ισχύ	0,84		Ονομ. συχνότητα	50	Hz
συνφ εκκίνησης	0,5		Είδος λειτουργίας: υγρή	S1	
Ρεύμα εκκίνησης DOL	31	A	Είδος λειτουργίας: ξηρή	S2 30, S3 25%	
Ρεύμα εκκίνησης Y/Δ	10,5	A	Μέγ. θερμοκρασία ρευστού	40	°C
Ροπή στρέψης εκκίνησης	21	Nm	Μέγ. αριθμ. ωριαίων εκκιν.	50	
Ροπή αδράνειας μάζας	0,0017	kg m²	Βαθμός προστασίας	IP 68	
Επιλεγμ. αντιεκρ. Προστασία	ATEX		Αριθμός Ex	BVS 11 ATEX E 119 X	
Σήμανση Ex	II 2G Ex db IIB T4 Gb				
Καλώδιο σύνδεσης κινητήρα			7G1,5 H07RN-F		

Στοιχεία σημείου λειτουργίας					
Παροχή	12,8	m³/h	Ρευστό μέσον	Νερό, καθαρό	
Μαν. ύψος	13,8	m	Τιμή NPSH της αντλίας		m
Ισχύς στον άξονα P_2	1,22	kW	Ταχύτητα περιστροφής	2915	rpm
Βαθμός απόδ. Αντλίας	39,9	%	Ολικός βαθμός απόδοσης	$= \frac{P_2 * \text{Βαθμός απόδ. Αντλίας}}{P_1}$	
Απορροφώμενη ισχύς P_1	1,6	kW			
Μέγ. παροχή	49,5 m³/h	Μαν. ύψος σε Μέγ. Παροχή	4,2 m	Μαν. ύψος σε μηδεν. παροχή	16,2 m
Σημείο βέλτ. Απόδ. Q (ΣΒΑ)	20,4	m³/h	Σημείο βέλτιστης απόδοσης H (ΣΒΑ)	7,7	m
Νο είδους	6064724				

3/12/18

Έργο:
Αριθμός Έργου:

Ημερ/νία: 2017-09-06
Συντάκτης:

wilo

Τεχνικά στοιχεία

Υποβρύχια αντλία λυμάτων — Rexa PRO V05 DA-222 / EAD1X2-T0025-540-O

Τεχνική περιγραφή
Υποβρύχια αντλία λυμάτων, ως υποβρύχιο συγκρότημα με κινητήρα, για σταθερή, κατακόρυφη τοποθέτηση, για άντληση ανεπεξέργαστων, χημικά και μηχανικά μη διαβρωτικών για την αντλία, λυμάτων. Ακτινικά διατεταγμένο στόμιο κατάθλιψης και αξονική αναρρόφηση. Το συγκρότημα είναι κατασκευασμένο με τρόπο εύκολο για τη συντήρηση. Οι παροχές πρέπει να εξασφαλίζονται κατά ISO 9906 Παρ. A.

3/12/18

Έργο:
Αριθμός Έργου:

Ημερ/νία: 2017-09-06
Συντάκτης:

wilo

Καμπύλες απόδοσης

Υποβρύχια αντλία λυμάτων

Rexa PRO V05 DA-222 / EAD1X2-T0025-540-O

Στοιχεία ισχύος σε σχέση με: Νερό, καθαρό [100%] ; 20°C; 998,19kg/m³; 0,0036014m²/h
Απόκλιση κατά ISO 9906 / Παράρτημα A.2

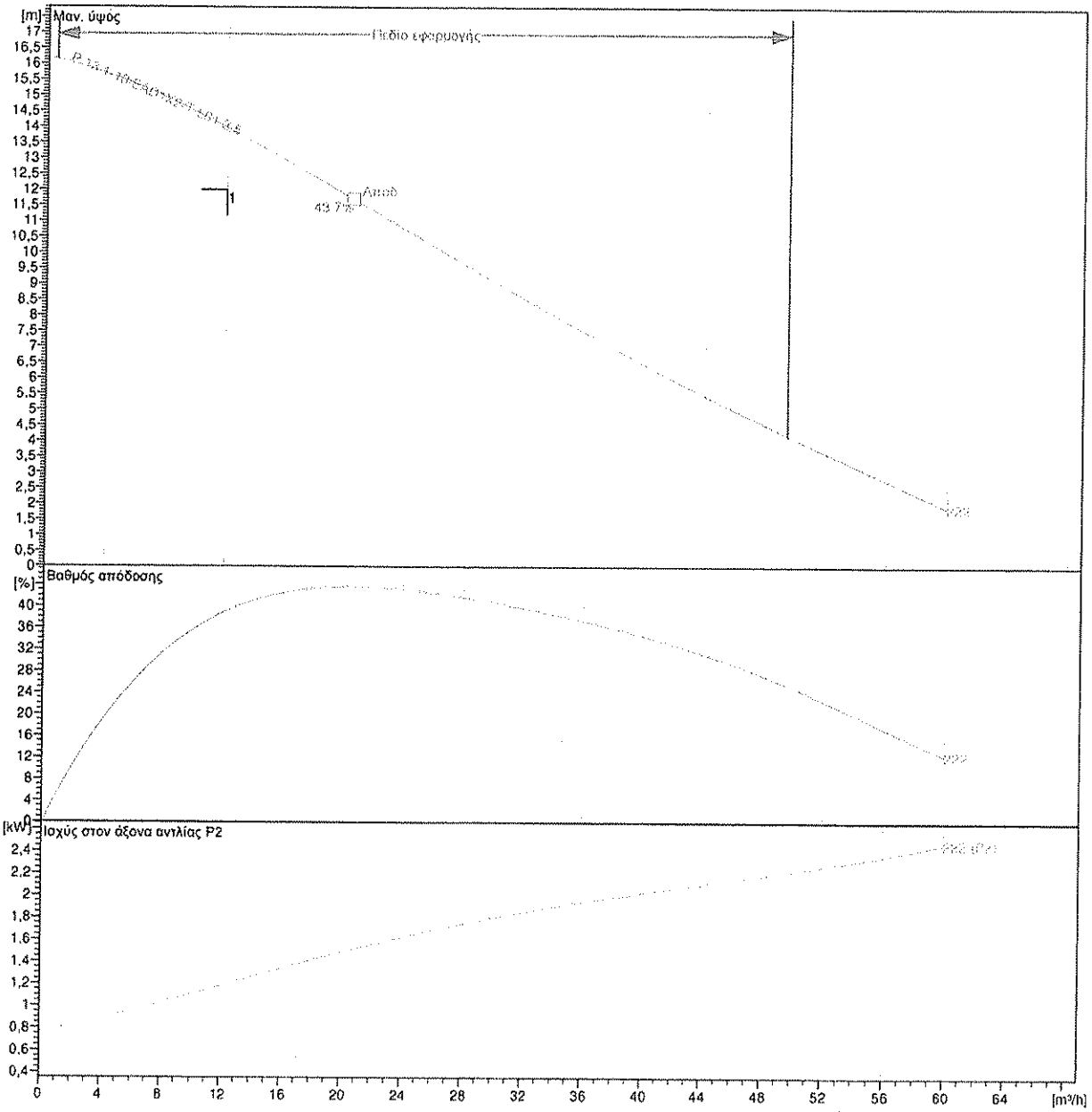

Αντλία				Στοιχεία σημείου λειτουργίας			
Πτερωτή (διάμ.)	Σχεδιασμ.	110	mm	Παροχή		12,8	m³/h
Ονομαστικός αριθμός στροφών		2900	rpm	Μαν. ύψος		13,8	m
Συχνότητα		50	Hz	Ισχύς στον άξονα	P_2	1,22	kW
Τύπος πτερωτής		Πτερωτή Vortex		Βαθμός απόδ. Αντλίας		39,9	%
Κινητήρας				Απορροφώμενη ισχύς	P_1	1,6	kW
Ονομ. ισχύς		2,5	kW	Τιμή NPSH της αντλίας			m
Επιλεγμ. αντιεκρ. Προστασία		ATEX		Ταχύτητα περιστροφής		2915	rpm

3/192/98

Έργο:
Αριθμός Έργου:

Ημερ/νία: 2017-09-06
Συντάκτης:

wilo

Τεχνικά στοιχεία

Υποβρύχια αντλία λυμάτων

Rexa PRO V05 DA-222 / EAD1X2-T0025-540-O

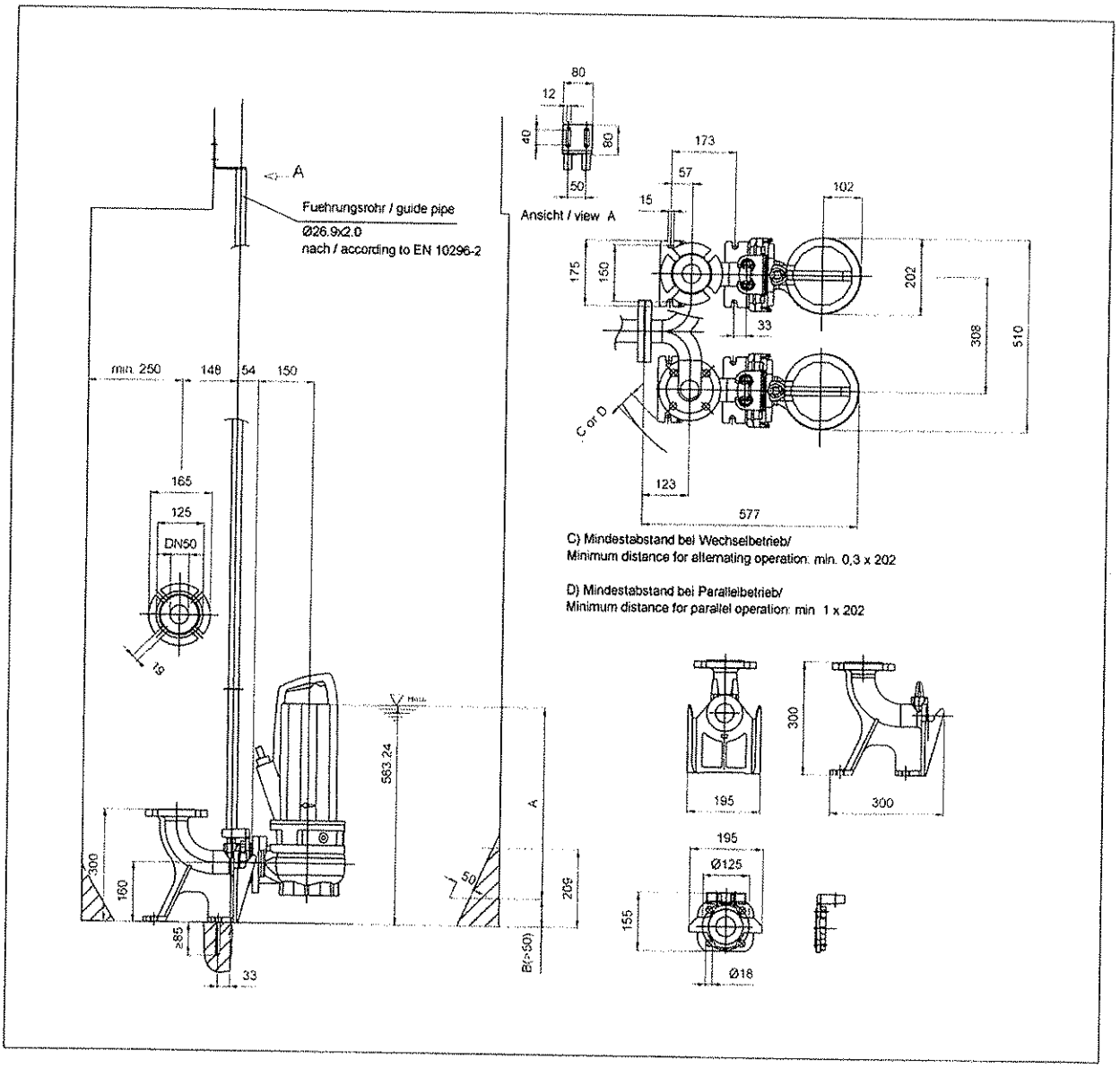

Διαστάσεις σε mm				Συνδέσεις
B	65			Στόμιο αναρ. DN50 PN10
				Στόμιο κατάθλ. DN50, Size 2, Rp2, cutoff PN10
				Suspension device DN50 DN50/2RK

3/12/18

Έργο:
Αριθμός Έργου:

Ημερ/νία: 2017-09-06
Συντάκτης:

wilo

Στοιχεία κινητήρα

P 13.1-10/EAD1X2-T-L01-2,5 2,5 kW 400 V 50Hz 3~

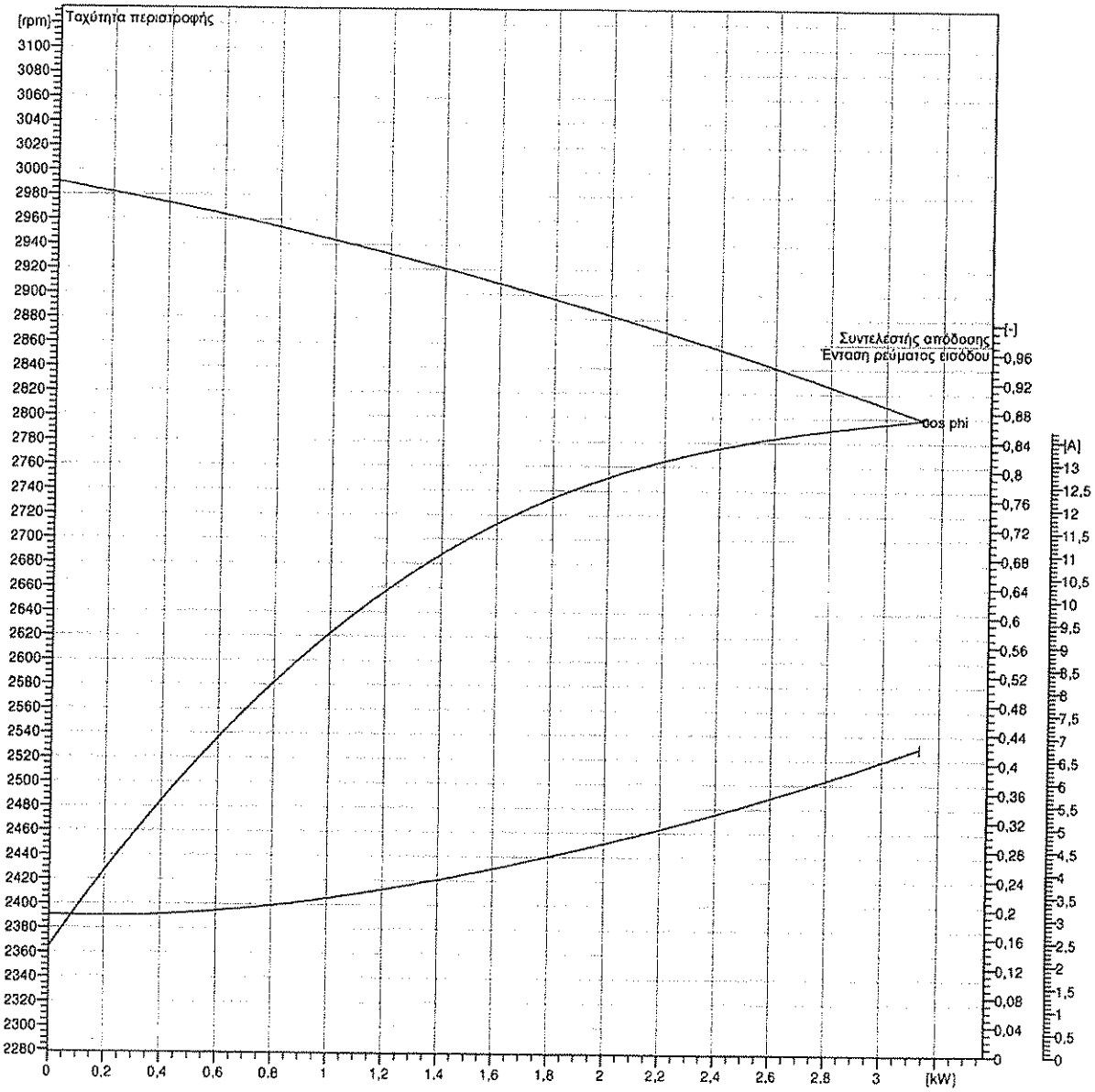

Στοιχεία εφαρμογής			Στοιχεία κινητήρα		
Είδος υποβρύχιας λειτουργίας	S1		Απορρόφηση ισχύος σε Ονομ. ισχύ	3,2	kW
Είδος λειτουργίας: ξηρή	S2 30, S3 25%		Ονομ. ισχύς	2,5	kW
Συντελεστής Service	1		Ονομαστ. ταχύτ. Περιστροφής	2848	rpm
Μέγ. θερμοκρασία ρευστού	40	°C	Απορρόφ. ρεύματος στην ονομ. ισχύ	5,5	A
Αντιεκρηκτική προστασία			Μέγ. αριθμ. ωριαίων εκκιν.	50	
Επιλεγμ. αντιεκρ. Προστασία	ATEX		Βάρος κινητήρα	34	kg
Αριθμός Ex	BVS 11 ATEX E 119 X		Βαθμός απόδ. στην ονομ. ισχύ	78,6	%
Σήμανση Ex	II 2G Ex db IIB T4 Gb		συνφ στην Ονομ. ισχύ	0,84	
Καλώδιο σύνδεσης κινητήρα			Ρεύμα εκκίνησης DOL	31	A
Καλώδιο σύνδ. κινητ.για εκκίνηση DOL	7G1,5 H07RN-F		συνφ εκκίνησης	0,5	
Καλώδιο σύνδ. κινητ. για εκκίνηση Y/Δ			Ροπή στρέψης εκκίνησης	21	Nm
Μέγ. δυνατό καλ. σύνδ. Κινητήρα	7x1,5	mm²	Ροπή αδράνειας μάζας	0,0017	kg m²

3142 178

3/12/18

8. SLUDGE TREATMENT UNITS

3/12/18

8.1 SLUDGE AEROBIC STABILISATION AND THICKENING TANK

3112/18

Mixer data sheet

WILO SE, Werk Hof
Heimgartenstraße 1-3
Postfach 3309 - D-95030 Hof/Saale
T: +49 9281 974-540 F: +49 9281 974-133
ctwwt@wilo.com www.wilo.com

ID	17-ORH-GR-AB-1-0001
Project country	Greece
Project name	WWTP MONDENEGRO
Position	1 Anoxic tank
Date	2017-09-01
Enquiry	

Data for selection

Mixed liquid

Kind	Activated sludge	
Density	1000	kg/m³
pH value	7	
Temperature	20	°C
Dry solids content	0,5	%
Flow behaviour	Newton flow	
Kind of thickening	None	
Additional thickener	No	

Solids

Origin	Not determined	
Kind	Not determined	
Solid size	Not determined	

Mixing task

Operating mode	Continuous	
Mixing task	Suspend	
Average calculated flow velocity[1]	0,3	m/s

Tank

Material	Concrete	
Outlet	On bottom, laterally at the tank edge	
Tank shape	Round tank	
Tank volume	353,4	m³
Vertical / inclined walls	Tank with vertical walls	
Upper diameter	10	m
Tank height	4,5	m
Maximum filling level	4,5	m
Minimum filling level	4,5	m
Relevant filling level	4,5	m

Preparation

Preparation	Screen with gap width < 10 mm, but no pre-clarification

3/72178

WILO SE, Werk Hof
Heimgartenstraße 1-3
Postfach 3309 - D-95030 Hof/Saale
T: +49 9281 974-540 F: +49 9281 974-133
ctwwt@wilo.com www.wilo.com

ID	17-ORH-GR-AB-1-0001
Project country	Greece
Project name	WWTP MONDENEGRO
Position	1 Anoxic tank
Date	2017-09-01
Enquiry	

Aeration

Kind: Without

Tank particularities

Default

Remarks regarding the selection process

The mixing result depends on the functional quality of the plant equipment in the mechanical treatment stage (preliminary treatment). Mineral fractions (grit and sand) must be always excluded from the process and cannot be kept in suspension. It is absolutely required to check the values mentioned above with the actual values on site.

3/12/18

WILO SE, Werk Hof
Heimgartenstraße 1-3
Postfach 3309 - D-95030 Hof/Saale
T: +49 9281 974-540 F: +49 9281 974-133
ctwwt@wilo.com www.wilo.com

ID	17-ORH-GR-AB-1-0001
Project country	Greece
Project name	WWTP MONDENEGRO
Position	1 Anoxic tank
Date	2017-09-01
Enquiry	

Selection of submersible mixers

Proposal

Type	TR 36.145-4/12 S17	
Quantity	1	
Frequency	50	Hz
Rated power	4,5	kW
Propeller speed	1400	1/min
Power factor (ISO 21630)	141	N/kW
Propeller diameter	0,25	m
Maximum power input	5,8	kW
Power input in duty point	*1 4,95	kW
System-dependent power input	*2 4,46	kW
Power density	*3 14	W/m³
System-dependent power density	*4 12,6	W/m³
Distance to water surface	0,5	m

*1 Measurement at static thrust acc. to ISO 21630 (inflow velocity ~0, Open Sea conditions).
*2 The power consumption of the mixer will be reduced in proportion to the flow velocity which is generated in the tank.
*3 According to ISO 21630.
*4 According to site conditions.

Important note

Installation of the mixer(s) according to installation sketch. Before installing the mixers, the up-to-date tank plans must be submitted without previous request to WILO SE, Hof for revision.

To guarantee a continuous operation, the minimum water cover above the propeller specified by WILO must be ensured.
Please check if our basic data are identical to your application and, if necessary, inform us in writing about modifications/objections. The aforementioned mixer(s) selection data are integral part of our warranty, whereas our warranty comes only into effect, when the submersible mixers are installed according to our recommendation. Because the overall function depends considerably on the correct positioning of the submersible mixers, we will not accept any warranty claims which result from positioning which we did not approve explicitly. Also zones of weak flow due to the tank geometry are not part of our warranty. The values of maximum power input, power input in the duty point and energy density are valid for clean water. Furthermore the use of our submersible mixers in patented procedures or under trade mark rights of third parties is excluded from our liability.

[1]In case of rectangular or round tanks the average flow velocity above the tank section cannot be guaranteed.
For the selected tank shape no directed circulating flow can be generated for physical reasons. The calculated average flow velocity refers only to an undirected turbulent flow.

All attached notes relating to the product and the selection are part of the technical selection of WILO SE.

3/12/18

Installation proposal

WILO SE, Werk Hof
Heimgartenstraße 1-3
Postfach 3309 - D-95030 Hof/Saale
T: +49 9281 974-540 F: +49 9281 974-133
ctwwt@wilo.com www.wilo.com

ID	17-ORH-GR-AB-1-0001
Project country	Greece
Project name	WWTP MONDENEGRO
Position	1 Anoxic tank
Date	2017-09-01
Mixer	TR 36.145-4/12 S17
Enquiry	

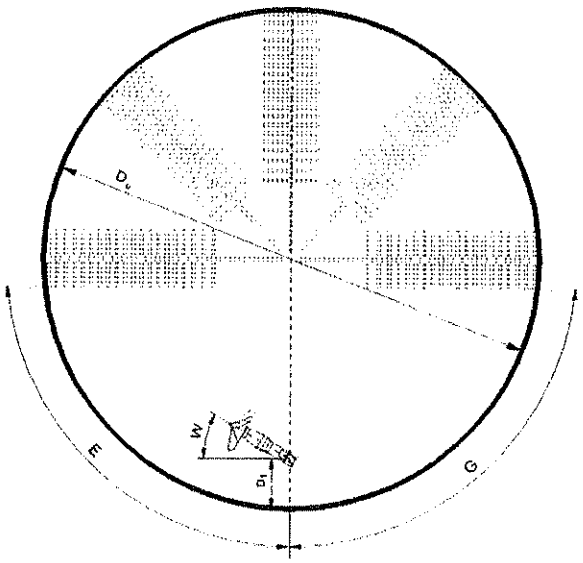

Installation recommendation regarding to miscellaneous minimum distances

n *	1			Du	10	m
W	45	°		E	1,5	m
G	1	m		D1	0,5	m
Nl *	1					

* n = no. of mixer per tank, Nl = no. of installation positions per tank

Without scale

Modification reserved

STANDARD 3/12/18

Installation proposal

WILO SE, Werk Hof
Heimgartenstraße 1-3
Postfach 3309 - D-95030 Hof/Saale
T: +49 9281 974-540 F: +49 9281 974-133
ctwwt@wilo.com www.wilo.com

ID	17-ORH-GR-AB-1-0001
Project country	Greece
Project name	WWTP MONDENEGRO
Position	1 Anoxic tank
Date	2017-09-01
Mixer	TR 36.145-4/12 S17
Enquiry	

Hints

The enclosed installation proposal is a schematic drawing and not according to scale. It serves as orientation guide. In case of order, the feasibility of this installation has to be matched with the tank drawing and the actual conditions. If there is an inflow and/or outflow in the immediate vicinity of the mixer, the mixer position must be checked based on updated tank plans to avoid bad influences on the mixer and short-circuit flows.

Without scale

Modification reserved

STANDARD

3/12/18

Abmessungen für Tauchmotorrührwerk
UNIPROP TR 36

Dimensions of Submersible mixer **UNIPROP TR 36**

Dimensions du circulateur immergé **UNIPROP TR 36**

wilo
Heimgartenstraße 1-3 D-95030 Hof/Saale
Telefon +49 9281 974-0 Fax +49 9281 96528
www.wilo.com E-Mail: info@wilo.com

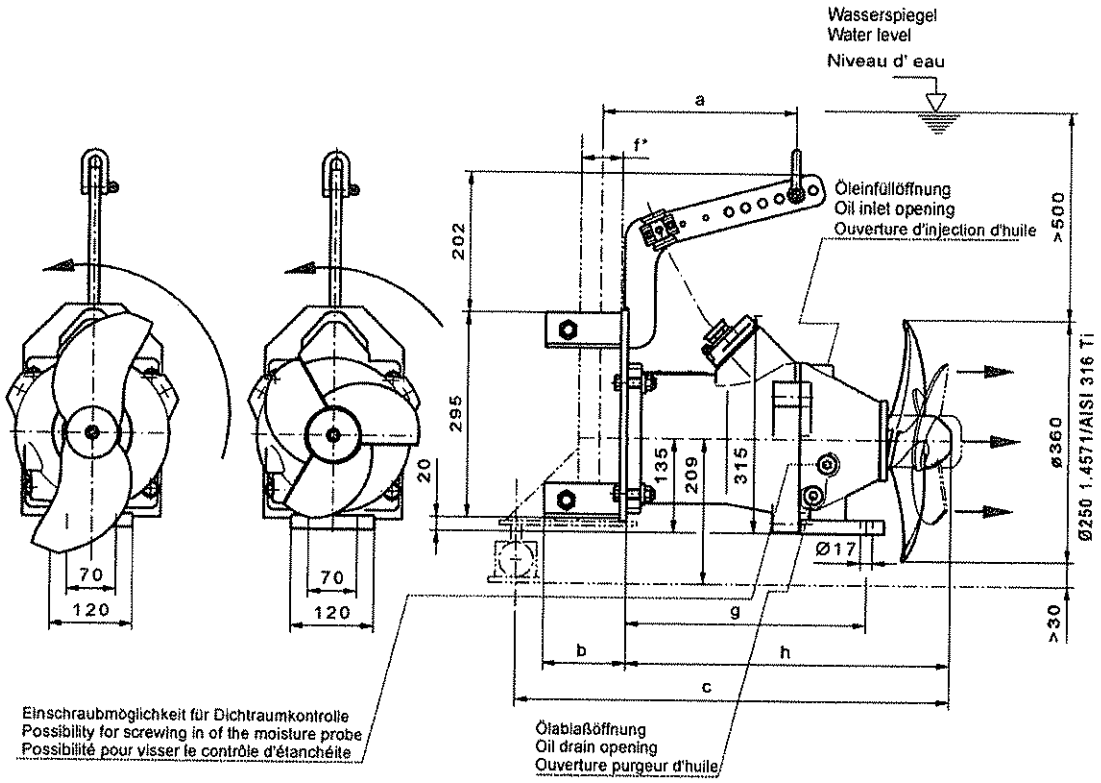

*) ab Beckentiefen > 6m ist mit dem Hersteller bezgl. der Gestängegröße Rücksprache zu halten!

From tank depths of 6m on please contact the manufacturer because of the guide pipe size!

A partir de 6m veuillez vous adresser au fabricant en ce qui concerne les dimensions des tubes de guidage!

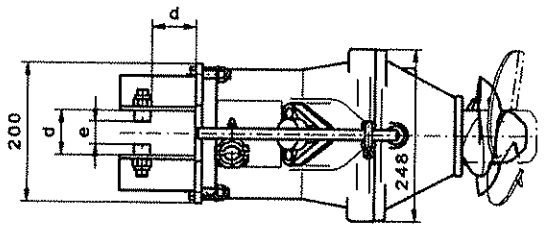

Zeichnung / Drawing / Souscription:

TR36.___-_/8
f = 60x60

*) TR36...S..

Motor / Motor type/ Type de moteur	T17-8/8R .. -6/8R			T17-4/12R			T17-4/16R	
Gestänge-Gr./ Size of pipes / Dimension du tube	f = 50x50	f = 60x60	f = 80x80	f = 50x50	f = 60x60	f = 80x80	f = 80x80	f = 100x100
a	235	240	250	265	270	280	280	300
b	100	120	140	100	120	140	140	165
c	615/629[1]	625/639[1]	645/659[1]	650/664[1]	660/674[1]	680/694[1]	770/784[1]	790/804[1]
d	55	65	85	55	65	85	85	115
e	23	33	53	23	33	53	53	65
g	347			382			420	
h	466/480[1]			501/515[1]			539/553[1]	
Gewicht / Weight / Poids								
PUR	max. 61 kg			max. 69 kg			max. 80 kg	
1.4571 / AISI 316 Ti	max. 65 kg			max. 73 kg			max. 84 kg	

Maßstab: 1:10 Technische Änderungen vorbehalten - Technical changes reserved - Modifications techniques réservées

Datum: 08.07.14 NP

Mb019.prt

3/12/18

Pioneering for You

Data sheet
Wilo-EMU TR 36.145-4/16 S17

Design / Direction of rotation

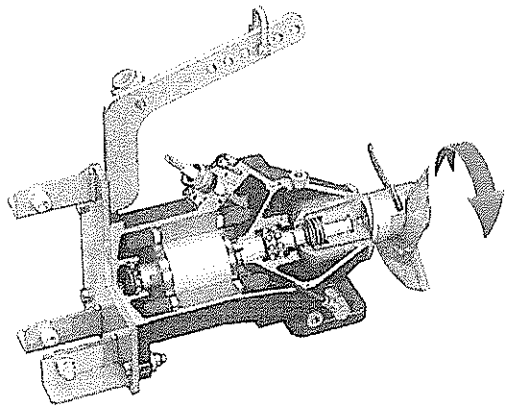

Technical data	
Unit	
Power consumption $P_{1.1}$	5.1 kW
Max. thrust F	720 N
Weight of unit m	84 kg
Max. weight* m	115 kg
Protection class	IP 68
Explosion protection	ATEX, FM
Ex classification ATEX	II 2G EEx d IIB T4
Ex classification FM	CLASS I, DIV. 1, GROUPS C, D; CLASS II, DIV. 1, GROUPS E, F, G; CLASS III

* = maximum weight including accessories

Propeller	
Propeller model	3-blade propeller with self-cleaning hub; backward-curved as a result clogging- and entwining-free
Nominal propeller diameter	250 mm
Propeller speed n	1400 rpm
Transmission ratio	1
Fill quantities and types	
Filling sealing chamber	White oil
Fill level sealing chamber V	1.1 l

Motor data	
Type of motor	T 17-4/16R (Ex)
Motor type	Submersible motor according to DIN/VDE 0530 (IEC 34)
Mains connection	3~400 V, 50 Hz
Rated current I_N	13.5 A
Starting current - direct I_A	68 A
Starting current - star-delta I_A	23 A
Power consumption P_1	8.2 kW
Rated power P_2	6.5 kW
Rated speed n	1400 rpm
Motor efficiency level	-
Efficiency η_M	80.0 %
Power factor $\cos \varphi$	0.87
Fluid temperature T	+3 ... +40 °C
Max. immersion depth	20 m
Insulation class	H
Max. switching frequency t	15 /h
min. switching break t	3 min
Starting torque M	98 Nm
Moment of inertia	0.0134 kg/m^2
Motor bearings	1 grooved ball bearing, 1 two-row inclined ball bearing

Materials	
Motor housing	EN-GJL-250
Motor shaft	1.4021
Static seal	FPM
Sealing on pump side	SiC/SiC
Sealing on motor side	FPM
Propeller	1.4571

3/12/18

wilo

J-OXY 250 2/15095 35(50)

Air intake rate

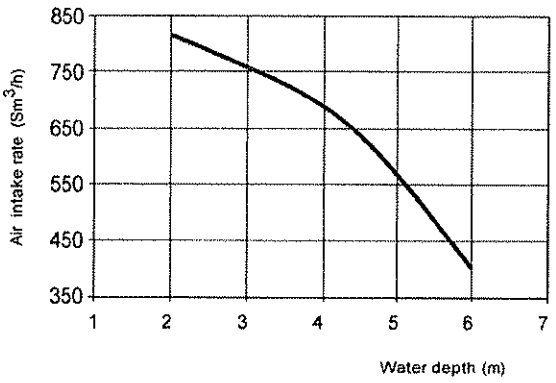

St. oxygen transfer rate SOTR *(According with ATV M 209-E)*

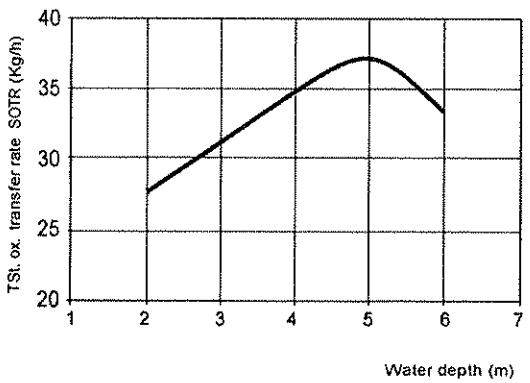

SYSTEM OXY	
Model	S-OXY 250 2/15095 35(50)
CONSTRUCTION FEATURES	
Diaphragm	95 mm
Air intake pipe	DN 200
Ejectors	2 x DN 150
MATERIALS	
Body	EN-GJL-250 (GG 25) cast iron
Diffuser cone	INOX AISI 304 stainless steel
Air intake pipe	Galvanized steel
Diaphragm	Vulkollan
Clamping nuts	INOX A2 stainless steel
Paint	Environment-friendly epoxy vinyl

DIMENSIONS (mm) e WEIGHT (Kg)			
A	690	E	1200
B	4321* (5821**)	F	3104
C	636	G	1416
D	449	Weight	774* (818**)

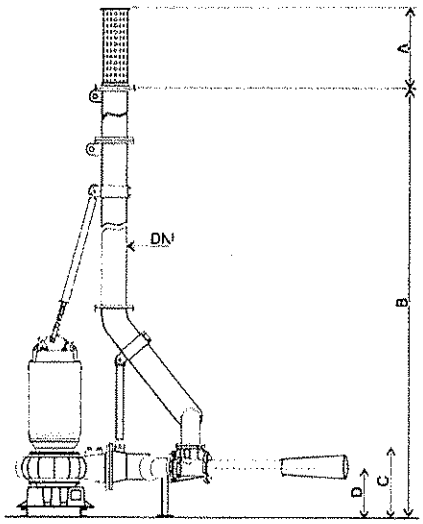

* Version L=3,5 m (max water depth installing: 3,5 m)
** Version L=5,0 m (max water depth installing: 5,0 m)

3/12/98

Project: Created on: 2017-09-01
Project number: Created by:

wilo

Technical data with motor

Submersible sewage pump FA 20.54E T 24-4/29K

Pump							
Pump type		FA 20.54E		Installation type		Suspension device	
Impeller Ø	max. possible	309	mm			DN200/2R	
	standard	277	mm	Free passage		125	mm
	designed	280	mm	Suction port	Pressure rating	PN10	
	min. possible	240	mm		Rated diameter	DN200	
Nominal speed		1450	1/min		Standard	EN1092-2-S	
Frequency		50	Hz	Discharge port	Pressure rating	PN10	
Impeller type		Single-channel			Rated diameter	DN200	
Impeller construction		Closed			Standard	EN1092-2-D	

Weights				
Weight of pump end	max. 135	kg	Weight of unit	max. 368 kg
Weight of motor	233	kg		

Materials	
Pump housing	EN-GJL-250
Stationary wear ring	1.4308
Impeller	EN-GJS-500-7
Mobile wear ring	1.4462/1.4470

Motor				
Motor name	T 24-4/29K		Number of poles	4
Rated power	25	kW	Rated speed	1450 rpm
Power input with rated power				28,5 kW
Rated voltage				400 -3 Y/D V
Current input with rated power				49,5 A
Efficiency with rated power				88 %
cos phi with rated power	0,83		Rated frequency	50 Hz
cos phi with starting			Operation type wet	S1
Starting current, direct starting	325	A	Operation type dry	
Starting current, star-delta	106	A	Max. fluid temperature	40 °C
Starting torque	403	Nm	Starts per hour max.	15
Inertia moment	0,1153	kg m²	Degree of protection	IP 68
Sel. explosion protection	--		Ex-number	--
Ex-designation	--			
Motor connection cable			2x4x4 + 2x1,5 NSSHÖU	

Duty point data						
Volume flow		550	m³/h	Fluid	Water, pure	
Head		9,7	m	Required pump NPSH	11,4	m
Shaft power	P_2	23	kW	Speed	1460	rpm
Pump efficiency		63,9	%	Total efficiency	$= \frac{P_2 * \text{Pump efficiency}}{P_1}$	
Power input	P_1	26	kW			

Item no.

3/12/18

Project:
Project number:

Created on: 2017-09-01
Created by:

wilo

Technical data

Submersible sewage pump FA 20.54E

with motor T 24-4/29K

Tender text
Submersible Sewage Pump as submersible, single-stage block unit in stationary, vertical installation to pump untreated sewage which doesn't attack the pump neither chemically nor mechanically. Pump with radially arranged discharge piece and axial pump intake. Service-friendly design by separated motor and pump casing. Pumping values to be guaranteed as per ISO 9906 Annex A Submersible motor in pressure-resistant design, double mechanical shaft seal in EMU block design, as well as separate sealing chamber with medical white oil. Motor chamber dry. Sealing of the motor at the shaft by a double, wear-resistant mechanical shaft seal independent of the direction of rotation entirely made of silicon-carbide as closed unit, in stainless steel sealing cartridge. Both seals in the sealing cartridge are cooled and lubricated by medical white oil.Power supply cable and control cable with longitudinally tight cable trumpet, cores embedded in casting resin and soldered strands as additional protection against penetrating humidity by capillary action. Protection of the motor winding by thermistors installed. Both closed ball bearings are maintenance-free and filled with high-quality-grease. Possibility for retrofitting a moisture probe by means of a pencil electrode as protection against penetrating humidity. All casing parts are of cast iron. Shaft and connecting elements are of stainless steel.

3/12/18

Project:
Project number:

Created on: 2017-09-01
Created by:

wilo

Performance curves
Submersible sewage pump FA 20.54E

with motor
T 24-4/29K

Power data referred to: Water, pure [100%] ; 20°C; 998,19kg/m³; 0,0036014m²/h
Tolerance as per ISO 9906 / Annex A.2

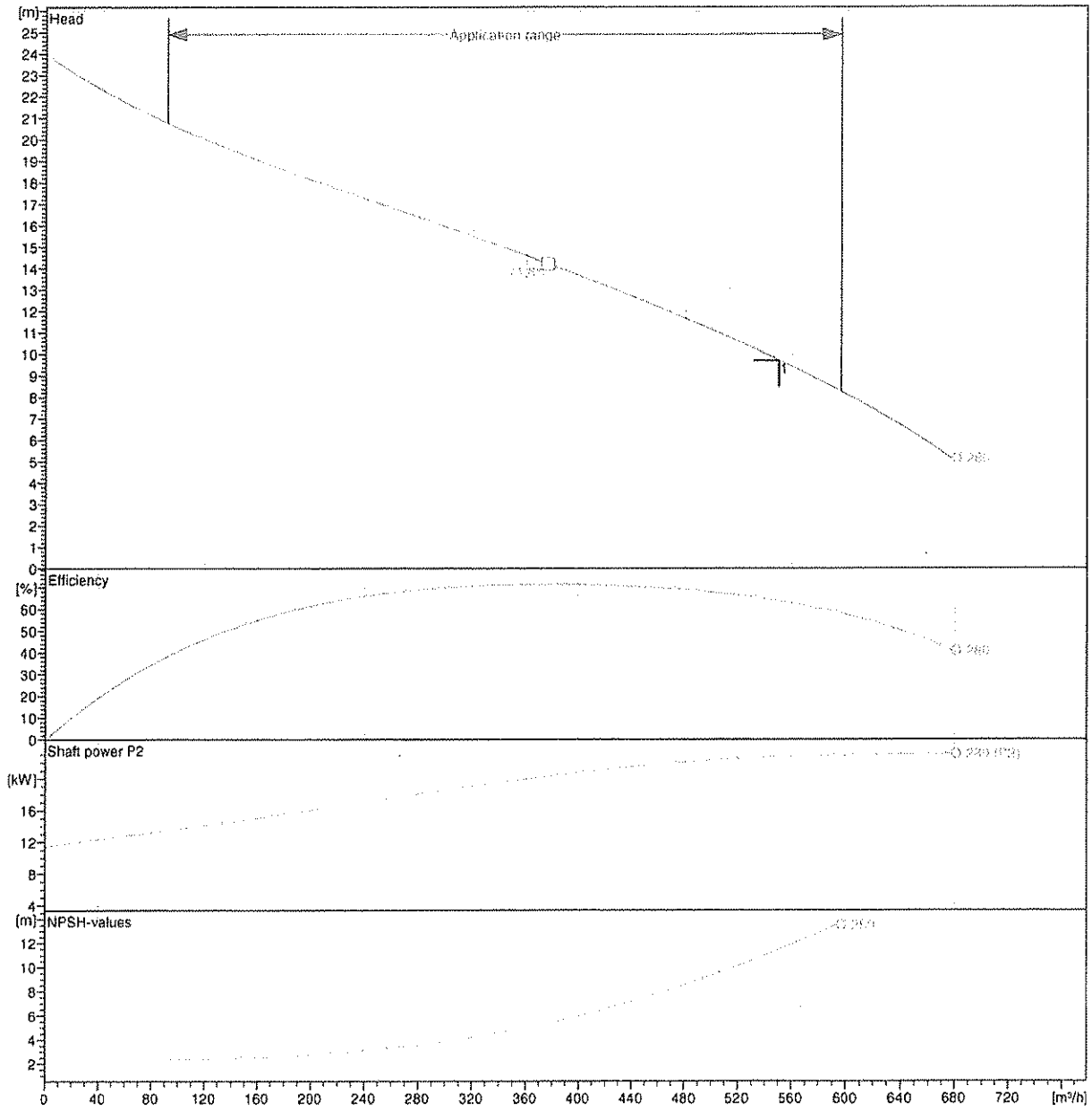

Pump				Duty point data			
Impeller Ø	designed	280	mm	Volume flow		550	m³/h
Nominal speed		1450	rpm	Head		9,7	m
Frequency		50	Hz	Shaft power	P_2	23	kW
Impeller type		Single-channel		Pump efficiency		63,9	%
Motor				Power input	P_1	26	kW
Rated power		25	kW	Required pump NPSH		11,4	m
Sel. explosion protection		--		Speed		1460	rpm

3/12/18

Project:
Project number:

Created on: 2017-09-01
Created by:

wilo

Technical data

Submersible sewage pump FA 20.54E

with motor T 24-4/29K

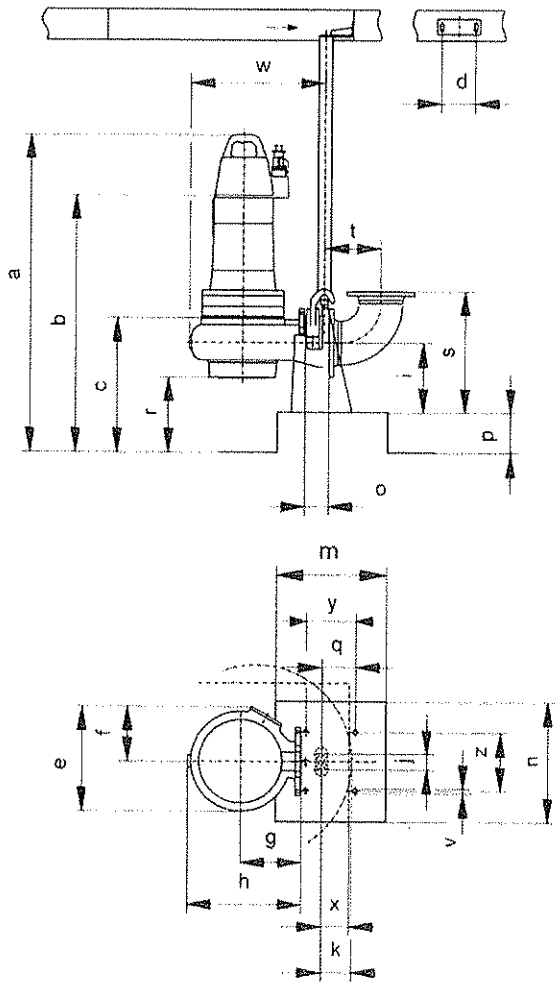

Dimensions in mm				Connections
a	1408	p	80	Suction port DN200 PN10
b	1155	q	115	
c	477	r	208	
d	270	s	560	
e	605	t	285	Discharge port DN200 PN10
f	358	v	25	
g	400	w	785	
h	693	x	105	
i	300	y	250	Suspension device DN200/2R
j	120	z	290	
m	550			
o	117			

3/12/18

Project:
Project number:

Created on: 2017-09-01
Created by:

wilo

Motor data

T 24-4/29K-25 25 kW 400 V 50Hz 3~

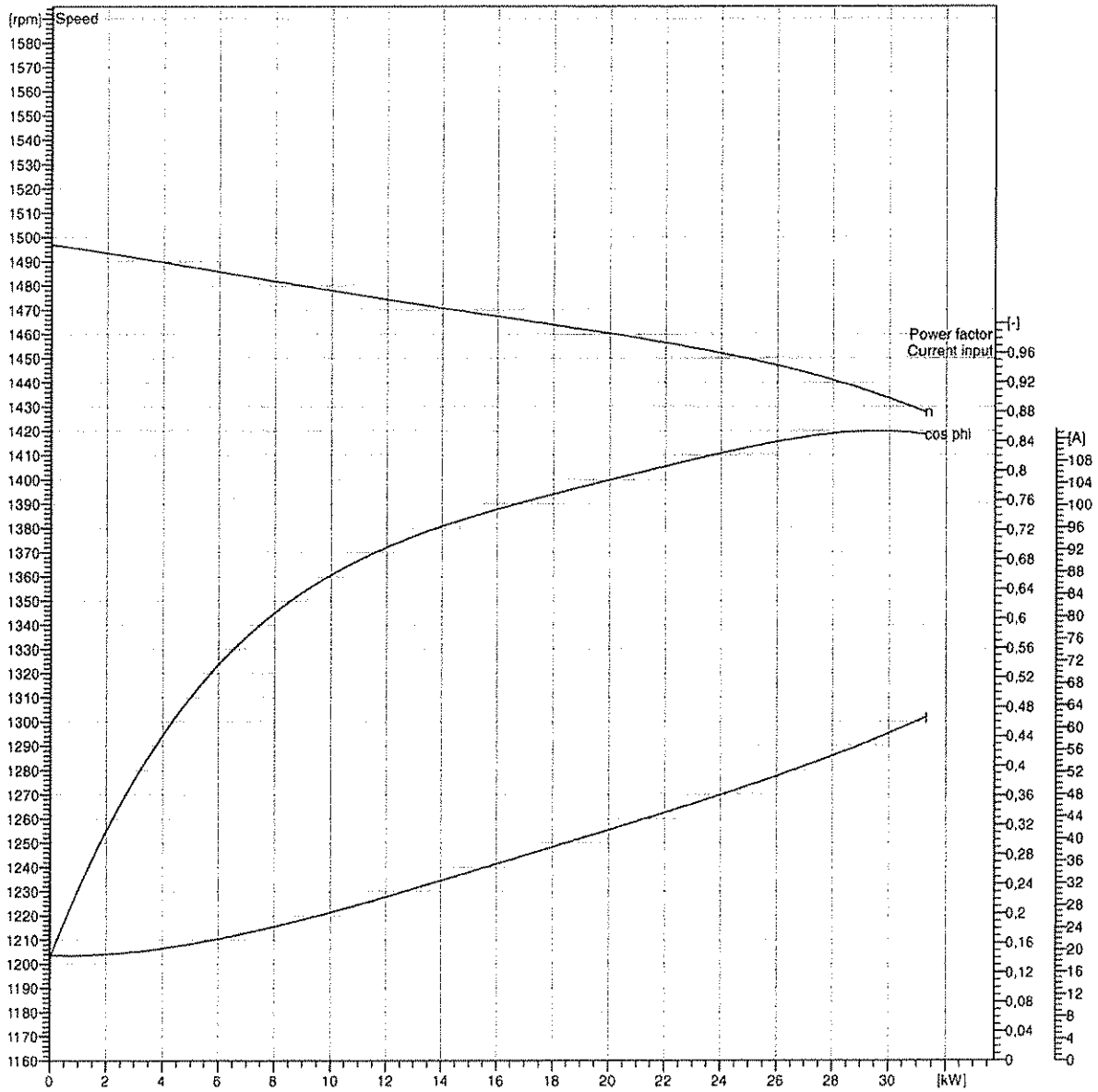

Application data			Motor data		
Operation type immersed	S1		Power input with rated power	28,5	kW
Operation type dry			Rated power	25	kW
Service factor	1		Rated speed	1450	rpm
Max. fluid temperature	40	°C	Current input with rated power	49,5	A
Explosion protection			Starts per hour max.	15	
Sel. explosion protection	--		Weight of motor	233	kg
Ex-number	--		Efficiency with rated power	88	%
Ex-designation	--		cos phi with rated power	0,83	
Motor connection cable			Starting current, direct starting	325	A
Motor connection cable for d-o-l starting	2x4x4 + 2x1,5 NSSHÖU		cos phi with starting		
Motor connection cable for star-delta starting			Starting torque	403	Nm
Max. possible motor connection cable	4x25	mm²	Inertia moment	0,1153	kg m²

3/12/18

EZstrip™
TR Muncher®

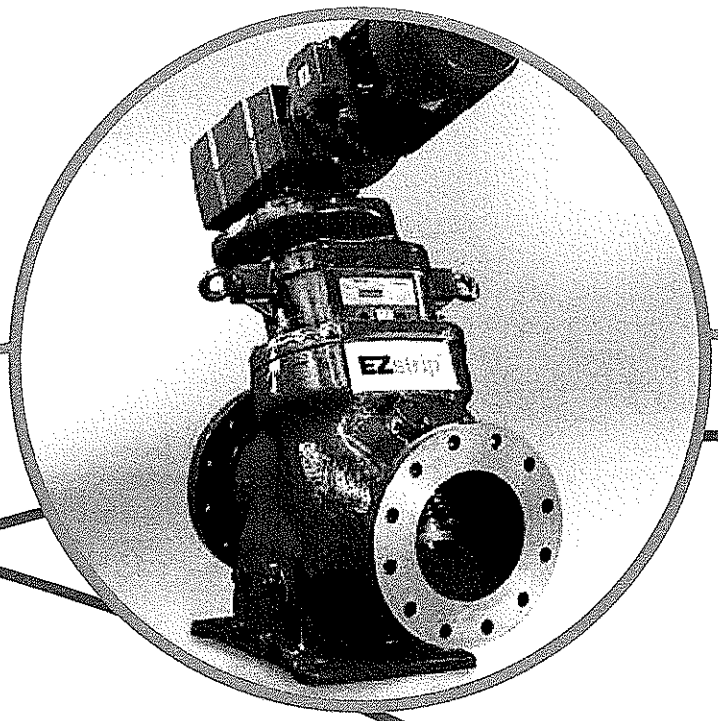

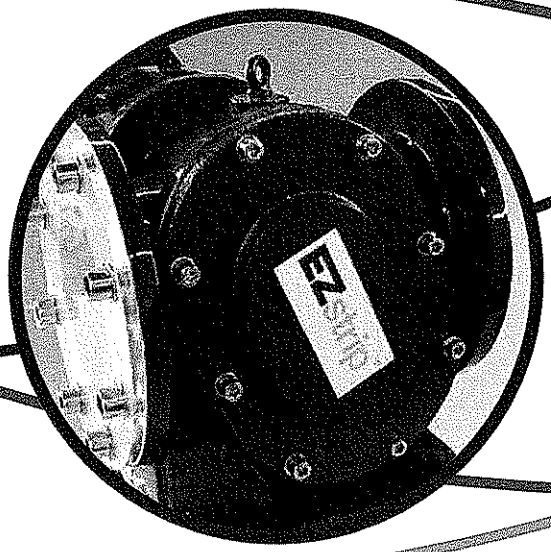

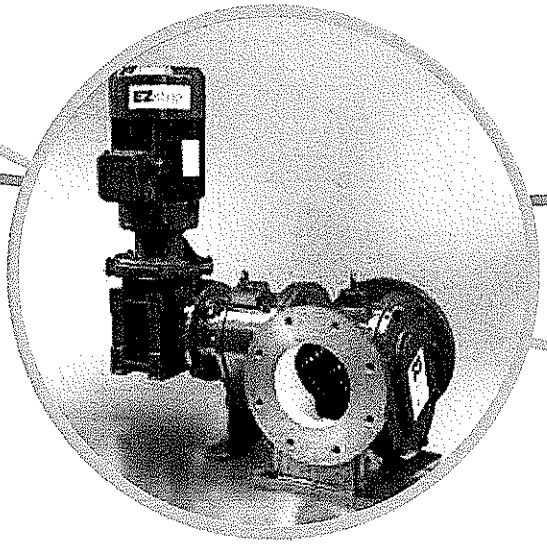

3/12/18

Mono®

One Company, Unlimited Solutions

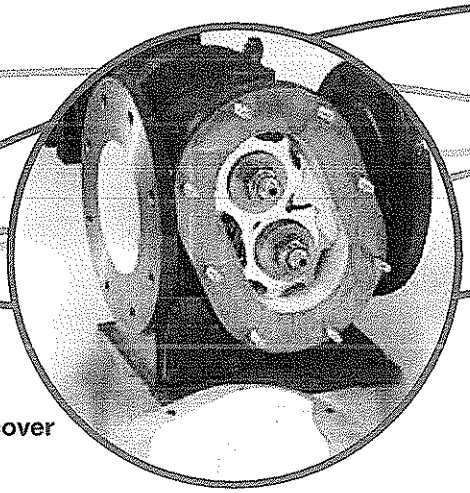

Large access cover

What can you do in 2½ hours?

Mono first began manufacturing progressing cavity pumps in 1935, followed by the Mono Muncher® range of grinders in 1981 and has continued to engineer industry leading products for over 75 years.

The new EZstrip™ pump design was launched in 2009 offering a range of operation and maintenance benefits and has proved to be a great success amongst end users.

Following on from this successful launch we have now incorporated the same maintenance benefits into our Muncher® range of grinders offering an option for a complete EZstrip™ package.

EZstrip™ TR Muncher®

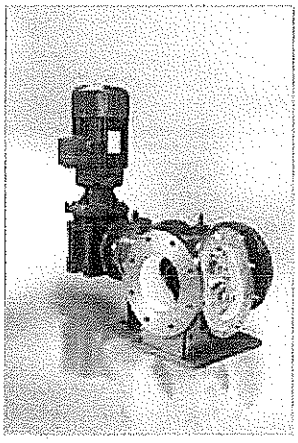

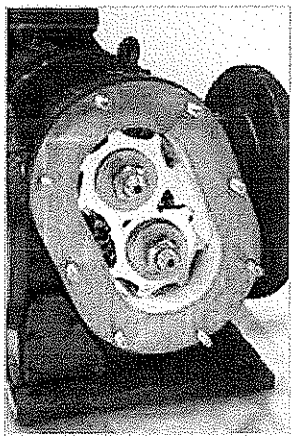

Features & Benefits

The EZstrip™ TR Muncher® is an extension to our Muncher® range of grinders, offering a choice of cutter materials and thickness for effective and efficient grinding of solids.

- Full access port allowing ease of inspection (CT201).
- Maintain in place of the cutters and spacers (CT201).
- Easily removed cutter stack.
- No special tools required.
- Reduced maintenance downtime.
- Increased labour savings.
- No need to disconnect pipework.
- Operational parameters are unaffected.

Capacity	up to 440m³/hr on raw sewage
	up to 330m³/hr on 4% sludge

3/12/18

To minimise the impact on the environment, this has been printed on recycled paper

Maintain in Place (M.I.P.)

To minimize the time and cost involved when maintaining a conventional grinder/macerator, the EZstrip™ can easily be maintained in place, without disconnecting or removing any pipework.

Currently, the removal of the cutting elements from a typical grinder/macerator requires removal from site and can take up to two days to complete.

With the EZstrip™, the complete cutter stack can be inspected and replaced within two and a half hours.

1. CT201 - Clear access to cover screw

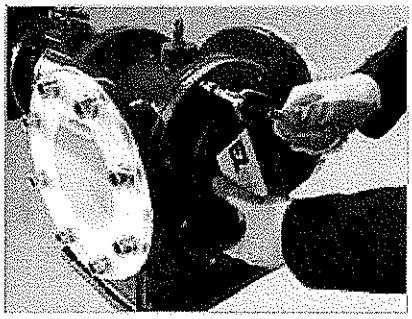

2. Remove retaining screws

3. Remove large access cover for visual inspection of cutters

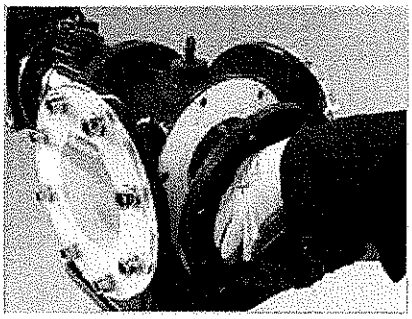

4. Loosen and remove shaft lock nuts

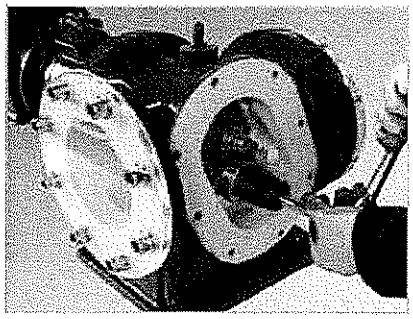

5. Remove cutters and spacers

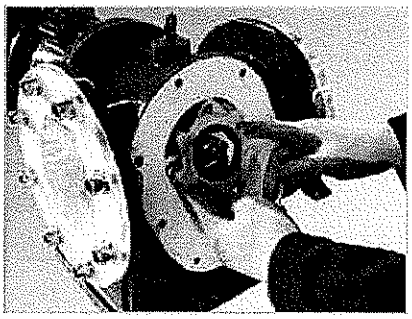

6. Inspect/replace cutters, spacers and shafts

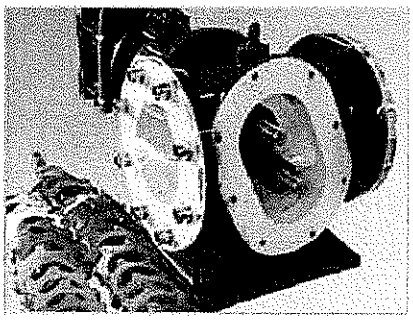

Performance Data

	% D.S/ M³/HR				
MODEL	0	2	4	6	8
CT201	118	100	85	63	52
CT203	242	210	183	155	125
CT205	440	388	330	276	225

3/12/18

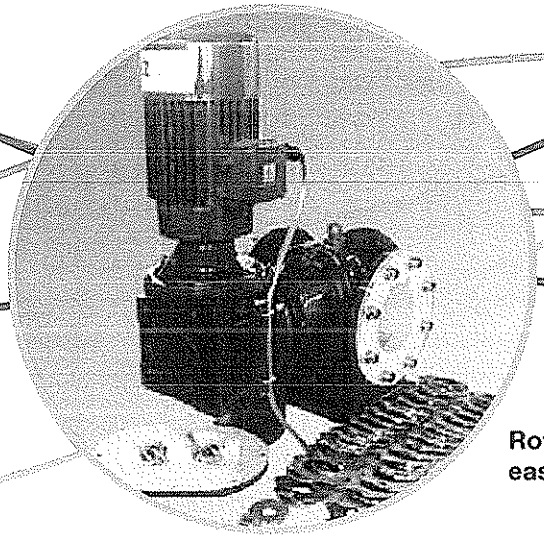

Rotating parts are easy to replace

Cost Savings

To fully appreciate the potential cost savings when installing an EZstrip™ Muncher®, the following examples have been calculated:

CUTTER INSPECTION

	Standard	EZstrip™
Maintenance time Inspection	90 minutes	30 minutes
Labour cost per inspection	£53	£18
SAVINGS PER INSPECTION		**£35.00**

CUTTER REPLACEMENT

	Standard	EZstrip™
Time to replace cutters/spacers	9 hours	2 1/2 hours
Cost per replacement	£321	£87.50
TOTAL SAVINGS		**£233.50**
Inspection and maintenance hours per muncher life	60	17.5
Cost over muncher life	£2,100	£612.50
SAVINGS OVER MUNCHER LIFE		**£1,487.50**
Maintenance hours per muncher life for full asset base	900	263
Cost over muncher life	£31,500	£9,205
SAVINGS OVER MUNCHER LIFE - FULL ASSET BASE		**£22,295**

ASSUMPTIONS

Labour costs per hour	£35
Muncher life	10 years
Asset base / Muncher population	15

A typical Grinder will have one annual inspection and one maintenance intervention every two years.

Calculations based on a standard size CT201 TR Muncher®

Maintain in place
Quick and easy removal of rotating parts with no electrical disconnection required.

Cartridge assembly
A pre-assembled cutter cartridge is available, with a 2 year warranty, to allow an even faster re-assembly time.

Service Exchange
A complete, competitively priced, replacement unit can be provided on a short lead time to reduce strip and repair down time and costs.

Energy efficiency motors
As an additional benefit to the low installation power we now fit motors to reduce operating costs further.

Low running speeds
Reduced wear for a longer working life which extends the periods between routine maintenance.

3/12/18

Dimensions (mm)

CT201

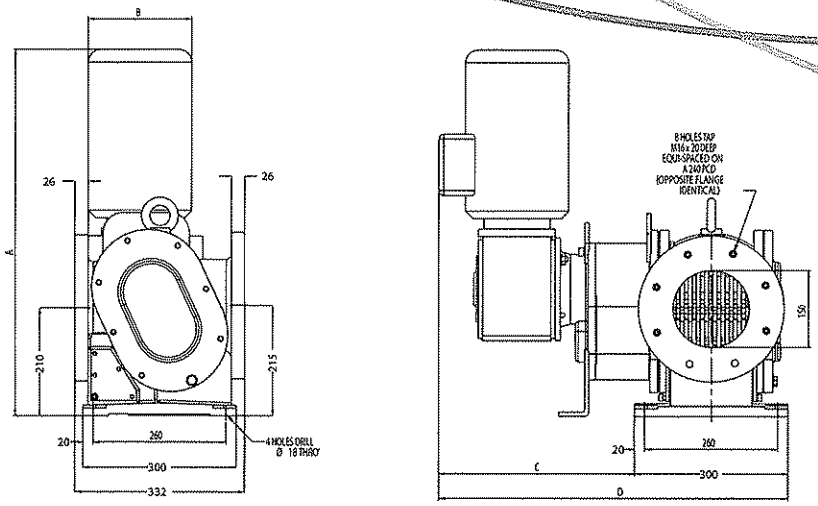

Model No	kW	A	B	C	D	Wt Kg (Approx)
CT201D	1.5	700	186	382	682	140
CT201D	2.2	715	203	382	682	175

CT203/205

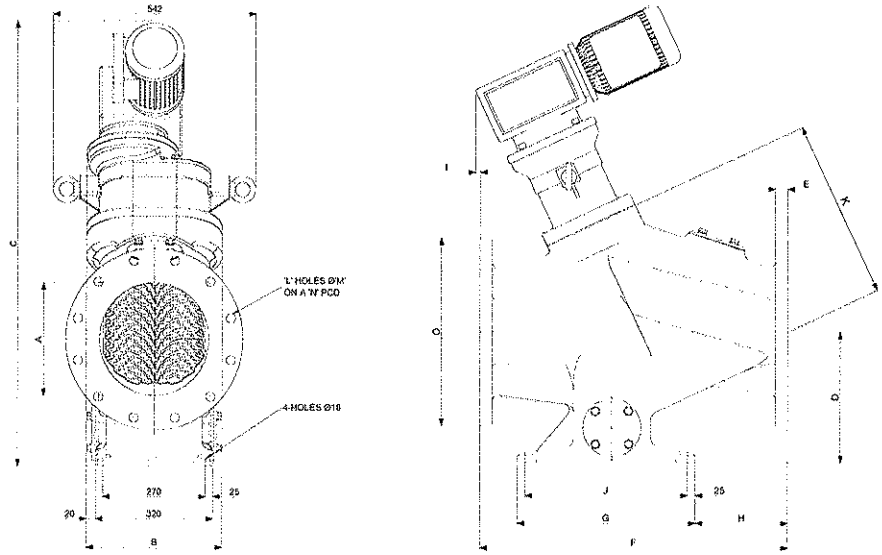

MODEL No.	kW	A	B	C	D	E	F	G	H	I	J	K	L	M	N	O	Wt. Kg
CT203C	1.5	100	370	1020	205	24	489	410	124	140	360	363	8	18	180	220	290
CT203D		150	370	1050	230	25	540	410	155	40	360	354	8	22	240	285	290
CT203E		200	370	1050	256	29	591	410	205	16	360	341	12	22	295	343	290
CT205F		250	370	1190	281	32	692	460	205	30	410	494	12	26	355	406	345
CT205G		300	370	1190	332	32	794	460	263	-17	410	472	12	26	410	483	345
CT203C	2.2 - 4.0	100	395	1130	205	24	489	410	124	169	360	363	8	18	180	220	340
CT203D		150	395	1170	230	25	540	410	155	97	360	354	8	22	240	285	340
CT203E		200	395	1170	256	29	591	410	205	72	360	341	12	22	295	343	340
CT205F		250	395	1310	281	32	692	460	205	87	410	494	12	26	355	406	390
CT205G		300	395	1310	332	32	794	460	263	40	410	472	12	26	410	483	390

3/12/18

Europe

Mono Pumps Ltd, Martin Street, Audenshaw
Manchester, M34 5JA, England
T. +44 (0)161 339 9000
E. info-mono@nov.com

D.M.I EST, 56, rue du Pont
88300 Rebeuville, France
T. +33 (0)3 29 94 26 88
E. dmi-est@dmi-est.fr

Americas

Monoflo Inc., 8708 W Little York Rd
Houston, Texas 77040, USA
T. +1 281 200 1200
E. monoflo@nov.com

NOV Monoflo S.A., Ing Huergo 2239
(1842) Monte Grande
Pcia. de Buenos Aires, Argentina
T. +54 11 4290 9940/50
E. info.monoflo@nov.com.ar

Monoflo Canada, 6010 – 53rd Ave
Alberta, Lloydminster
T9V2T2, Canada
T: + 1 780 875 5584
E: info.monoflo@nov.com

Australasia

Mono Pumps (Australia) Pty Ltd
75 Frankston Garden Drive
Carrum Downs, Victoria 3201, Australia
T. 1800 333 138
E. ozsales@nov.com

Mono Pumps (New Zealand) Ltd
35-41 Fremlin Place, Avondale
Auckland, 1026, New Zealand
T. +64 (0)9 829 0333
E. info@mono-pumps.co.nz

Asia

Mono Pumps Ltd, Building 5, Madong Industrial Park
1250 Sicheng Road, Malu Town, Jiading District
Shanghai 201801, P.R. China
T. +86 (0)21 3990 4588
E. monoshanghai@nov.com

www.mono-pumps.com

Published information other than that marked CERTIFIED does not extend any warranty or representation, expressed or implied, regarding these products. Any such warranties or other terms and conditions of sales and products shall be in accordance with Mono Pumps Limited standard terms and conditions of sale, available on request.

© Mono Pumps Limited June 2011 Literature reference: TRMUN/01/1

Mono® is a registered trademark of Mono Pumps Ltd.
Registered in England No 300721

Mono®

One Company, Unlimited Solutions

Produced on recycled paper

3172178

Compact C
Range

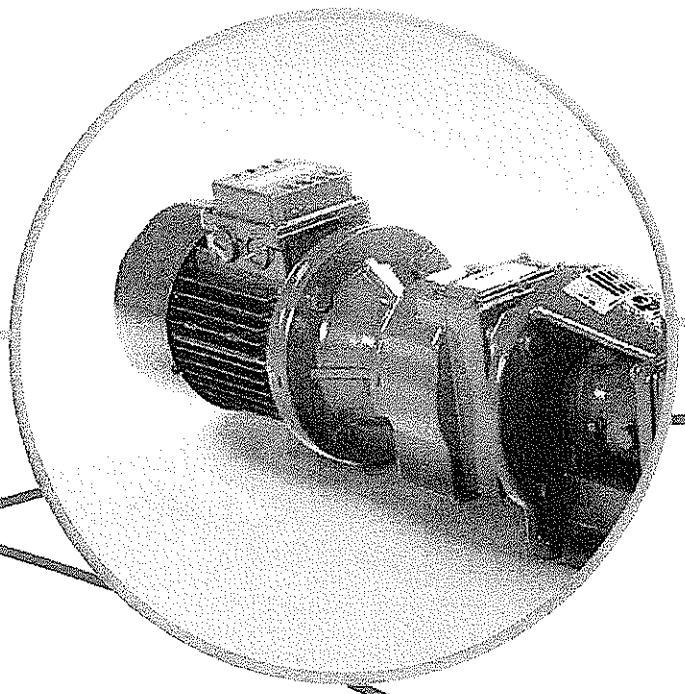

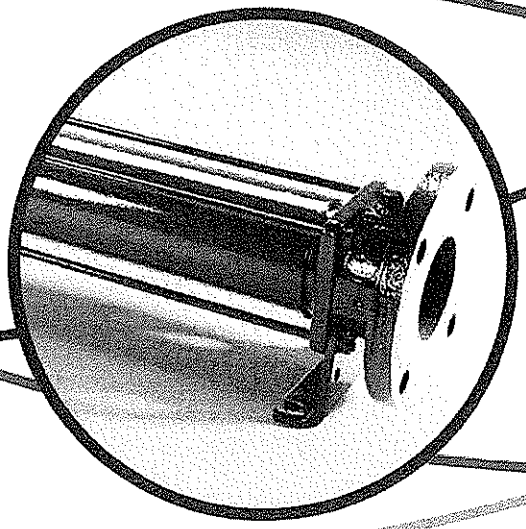

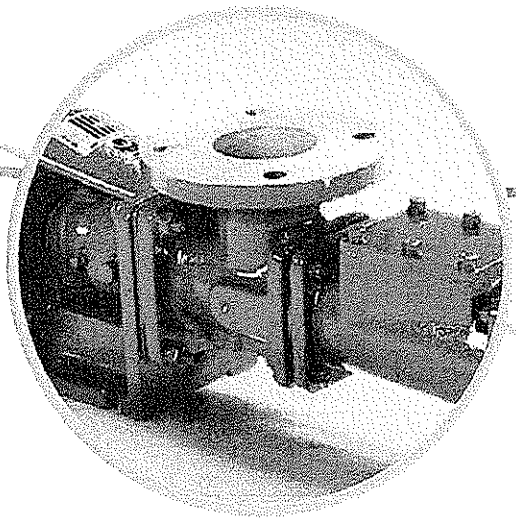

Mono®

One Company, Unlimited Solutions

3/12/98

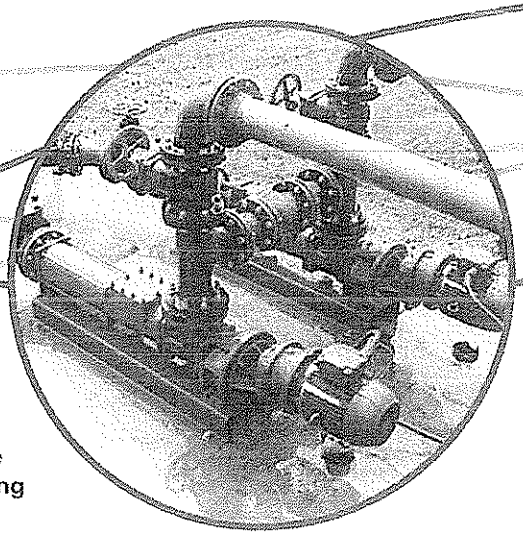

Sludge pumping

Features & Benefits

Capacity	up to 440m³/h
Pressure	up to 24 bar
Temperature	-10°C up to 100°C

Typical applications include:

- Domestic and industrial effluents
- Hydrated lime slurry
- Sludge
- Shear sensitive latex emulsion
- Milk curds, sauces, fruit juices
- Industrial chemicals and detergents
- Starch slurries
- Coating clays, gypsum and silicate
- Paper stocks
- Agricultural slurries

"A competitively priced progressing cavity pump, with a compact construction and maximum performance characteristics."

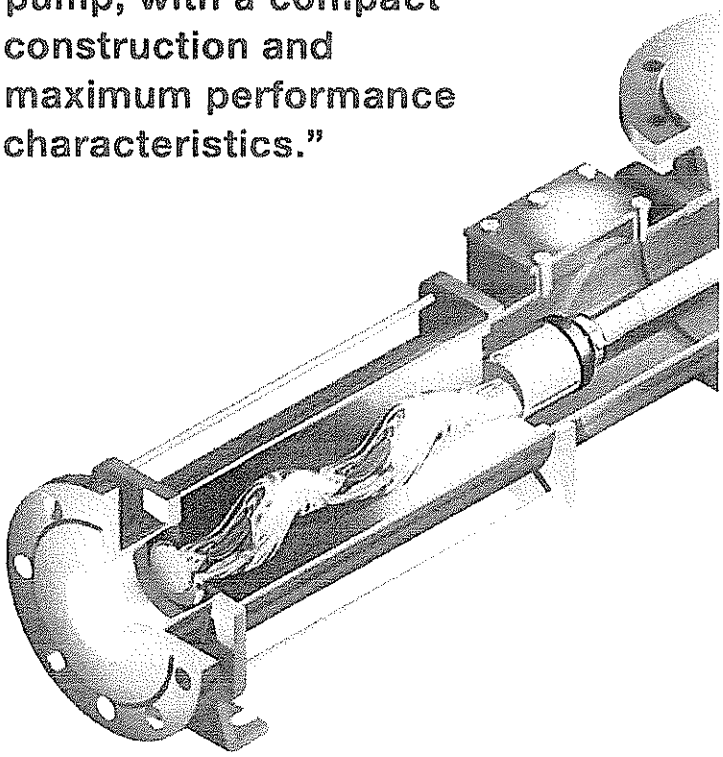

Materials of construction
Available in cast iron or stainless steel, with a choice of rotor and stator materials to suit individual applications e.g. hard chrome plated rotor or natural rubber stator.

High pressure / long haul pumping
Can offer considerable project cost savings by utilising small bore pipework and eliminating the need for a series of pumps, when pumping over long distances or with high head requirements.

Low running speeds
Reduced wear for a longer working pump life which extends the periods between routine maintenance. Think of the savings you could make on abrasive applications.

To minimise the impact on the environment, this has been printed on recycled paper

3/12/18

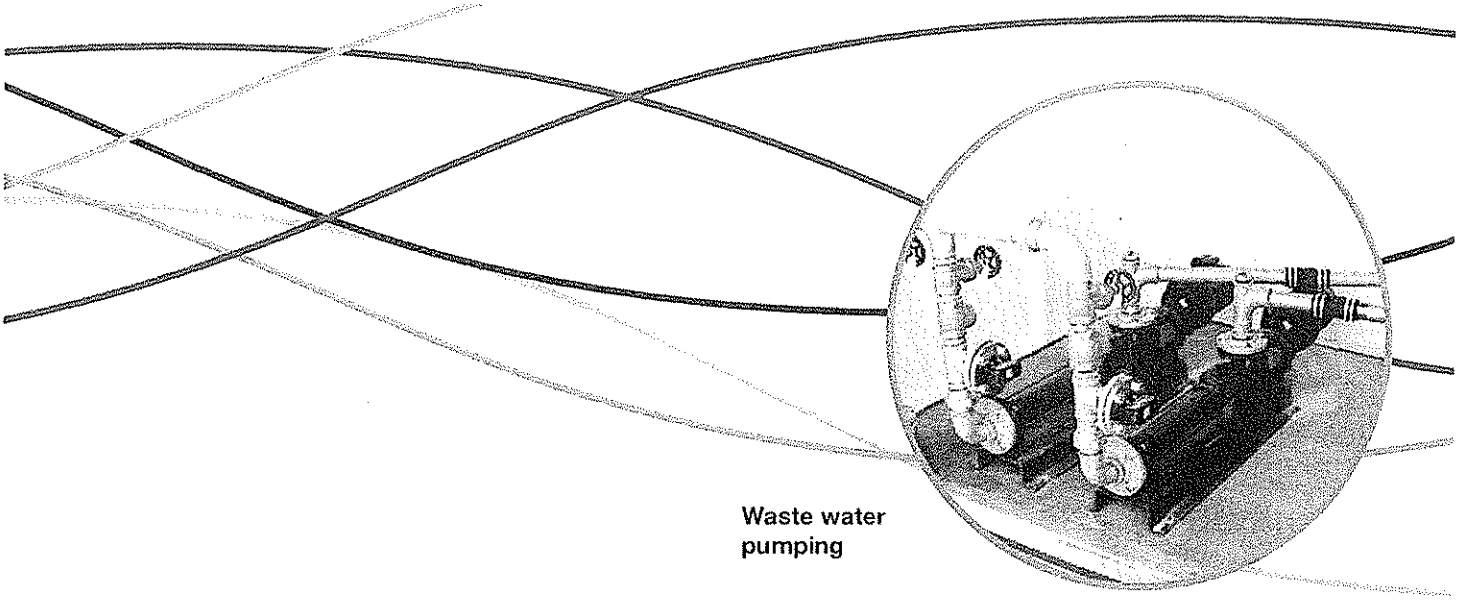

Waste water pumping

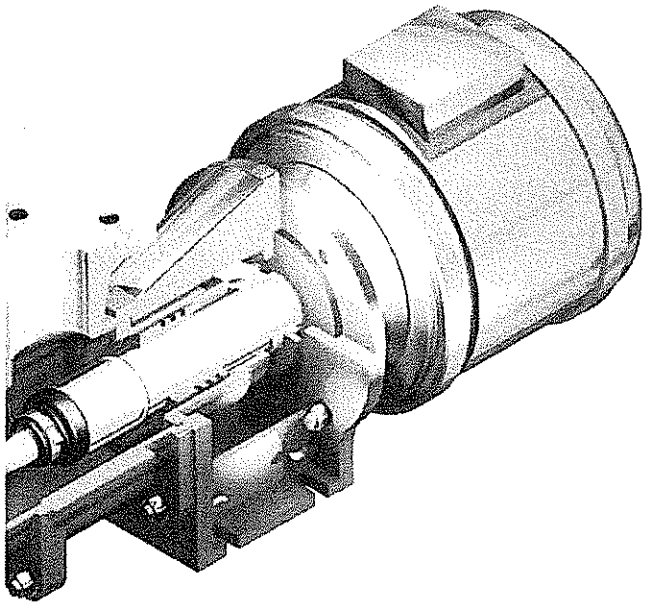

Compact unit
As the drive forms an integral part of the unit, the pump is ideal for space-saving installations.

Gentle pumping action
Minimises shear and crush damage to the pumped product.

Surface mounted
Making it easier, cleaner and less hazardous for maintenance.

Up to 8.5m suction lift
Deep sumps can be easily pumped without the use of submersible equipment.

Plug in shaft
Ease of maintenance when assembling or dismantling, with extraction facility.

Viscous products
The pump can be supplied with a square inlet and conveyor to assist viscous slurries into the pumping element.

Inspection cover
Available for applications where rag content is a problem.

Baseplate
Pumps are supplied on a baseplate to ease installation.

Sealed joints
Fully sealed drive train to maximise life and minimise downtime.

Shaft sealing options
Packed gland or single and double mechanical seals are available.

Versatile
Can be installed vertically or horizontally to suit the application. Can be run in either direction.

Robust drives
Specially selected drives and gearboxes for longer life. Options include electric motor drive units supplied as overhead vee belt driven, direct-coupled or variable speed drives with mechanical variable speed or frequency inverter.

Duracoat coating
Rotors can be supplied with Mono's range of specialist coatings to help extend the life of the rotors by increasing wear and corrosion resistance.

Handles gas entrainment
No air or gas locking in the pump. The positive seal formed by the interference fit between rotor and stator enables the pump to self prime and it also allows tri-phase liquids i.e. solids, gases and liquids to be handled easily.

3/12/18

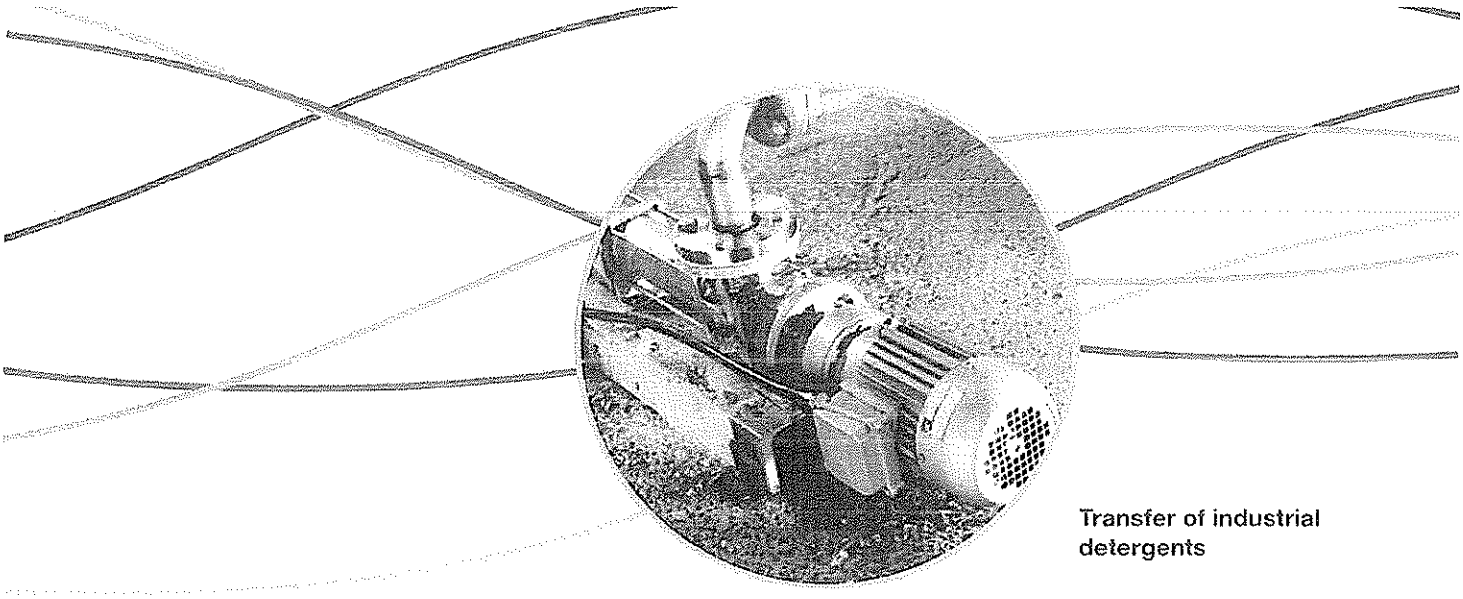

Transfer of industrial detergents

Product Dimensions

MODEL	A	A1	B	C	D	E	F	G	H
C21B	429	115	296	133	1¼"	144	85	120	160
C21D	573	250	440	133	1¼"	144	85	120	160
C22A	429	115	296	133	1½"	144	85	120	160
C22B	573	250	440	133	1½"	144	85	120	160
C22D	959	525	822	137	1½"	148	85	120	160
C23A	520	165	383	137	1½"	148	85	120	160
C23B	665	300	528	137	1½	148	85	120	160
C23K	665	300	528	137	1½	148	85	120	160

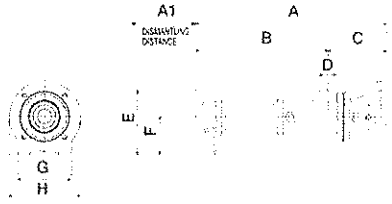

MODEL	A	A1	B	C	D	E	F	G	H
C1XK	750	300	593	157	50	190	85	120	160
C14K	986	455	756	230	65	227	112	140	200
C15K	1102	570	882	220	80	232	112	140	200
C16K	1272	680	1036	236	100	255	125	160	250
C17K	1478	800	1198	281	125	310	150	180	300
C18K	1654	880	1374	280	125	310	150	180	300
C19K	1856	990	1541	315	150	345	160	200	300
C1AK	2007	1100	1698	315	150	345	160	200	300
C1BK	2437	1210	2009	427	200	450	225	280	350
C13D	1160	525	930	230	65	227	112	140	200
C2XA	566	135	409	157	50	190	85	120	160
C2XB	749	315	592	157	50	227	112	120	160
C1XD	1363	650	1086	277	80	245	125	160	250
C14A	781	250	551	230	65	227	112	140	200
C14B	986	455	756	230	65	227	112	140	200
C14D	1452	780	1185	277	80	245	125	160	250
C15A	842	310	622	220	80	232	112	140	200
C15B	1159	570	882	277	80	245	125	160	250
C15D	1776	1005	1457	319	100	280	150	180	300
C16A	960	365	724	236	100	255	125	160	250
C16B	1355	680	1306	319	100	280	150	180	300
C16D	2181	1210	1813	359	125	320	160	200	300

MODEL	A	A1	B	C	D	E	F	G	H
C17A	1110	430	830	281	125	310	150	180	300
C17B	1478	800	1198	281	125	310	150	180	300
C17D	2626	1385	2224	402	150	410	225	280	350
C18A	1246	475	966	281	125	310	150	180	300
C18B	1742	880	1374	386	125	320	160	200	300
C18D	2786	1555	2364	402	150	410	225	280	350
C19A	1394	530	1079	315	150	345	160	200	300
C19B	1856	990	1541	315	150	345	160	200	300
C1AA	1476	610	1161	315	150	345	160	200	300
C1AB	2159	1100	1756	402	150	410	225	280	350
C1BA	1794	640	1366	427	200	450	225	280	350
C1BB	2591	255	2009	582	200	475	250	280	411
C1CA	2268	250	1611	657	250	511	250	340	411
C1CB	3146	250	2489	657	250	511	250	340	411
C1CK	3146	250	2489	657	250	511	250	340	411
C1DA	2569	250	1912	657	250	511	250	340	411

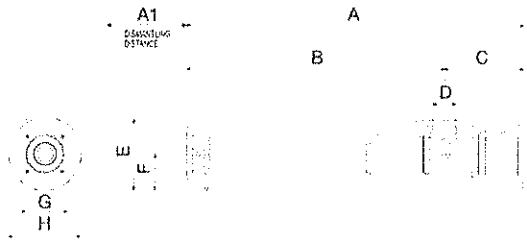

MODEL	A	A1	B	C	D	E	F	G	H
S14A	781	250	526	255	165x165	236	112	140	200
S14K	986	455	731	255	165x165	236	112	140	200
S15A	842	310	587	255	165x165	236	112	140	200
S15K	1102	570	847	255	165x165	236	112	140	200
S16A	960	365	674	286	200x200	260	125	160	250
S16K	1272	680	986	286	200x200	260	125	160	250
S17A	1110	430	777	333	240x240	310	150	180	300
S17K	1478	800	1145	333	240x240	310	150	180	300
S18A	1246	475	912	334	240x240	310	150	180	300
S18K	1654	880	1320	334	240x240	310	150	180	300

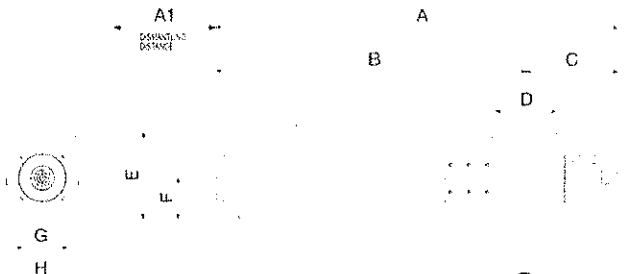

All dimensions in mm's, unless otherwise stated and for guidance only.
Dimension A1 is the preferred dismantling space. For full certified drawings, please contact Mono

3/12/18

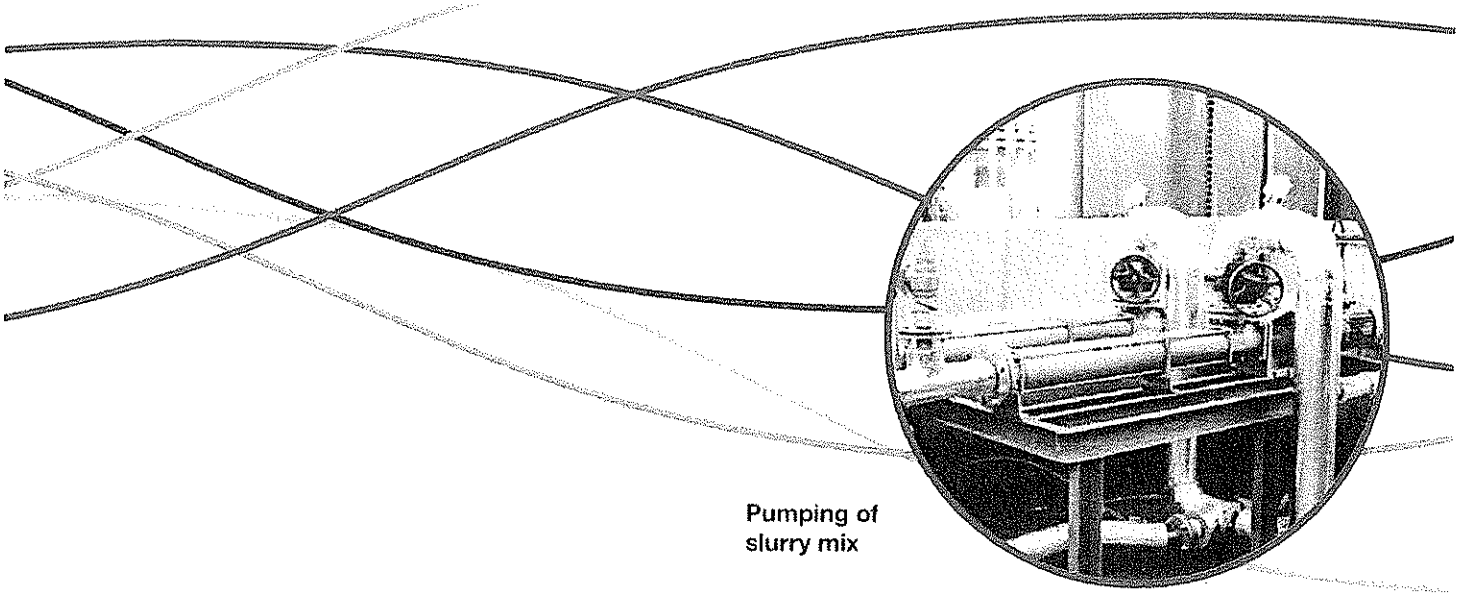

Pumping of slurry mix

Performance Data

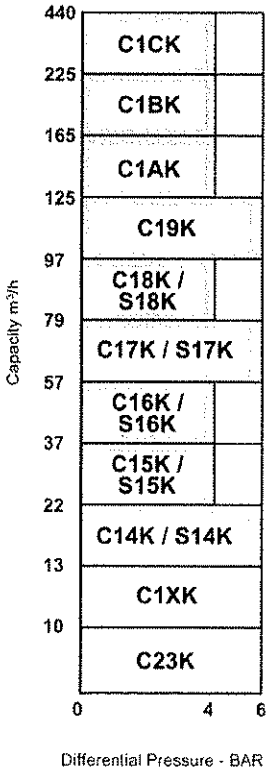

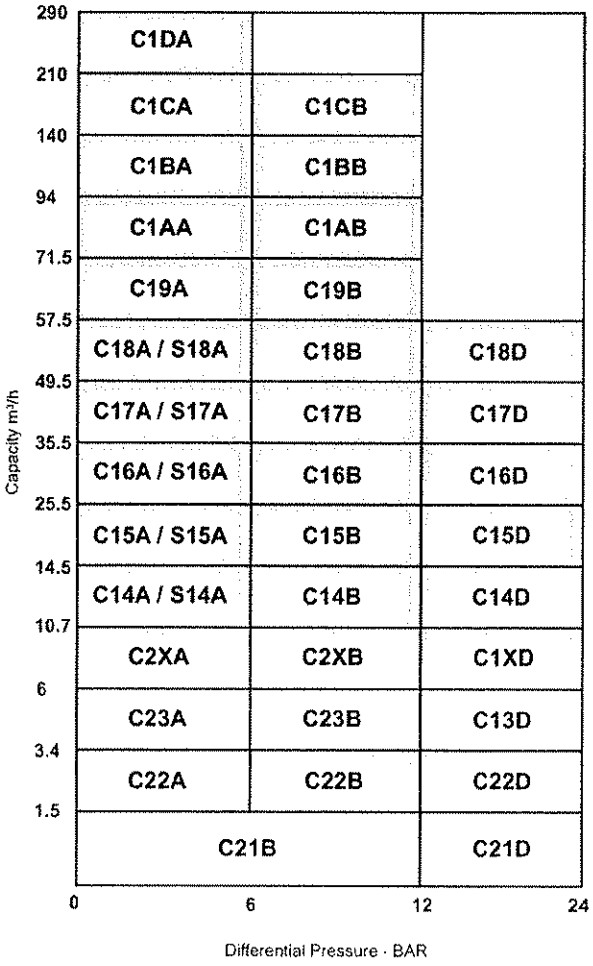

For guidance in selecting a pump, please contact Mono.

3/12/98

Motor/Baseplate Dimensions

MODEL	LENGTH	WIDTH	HEIGHT	MODEL	LENGTH	WIDTH	HEIGHT
C1XK	1304	300	304	C16A	1635	360	488
C14K	1665	300	475	C16B	2341	420	609
C15K	1777	360	475	C16D	3225	520	472
C16K	1947	360	488	C17A	2066	360	584
C17K	2464	360	609	C17B	2464	360	609
C18K	2640	420	609	C17D	3672	520	727
C19K	2902	420	649	C18A	2202	360	584
C1AK	3053	420	649	C18B	2788	420	649
C1BK	3481	520	537	C18D	3830	520	537
C13D	1835	360	475	C19A	2440	420	649
C2XA	1120	300	304	C19B	2902	420	649
C2XB	1329	300	304	C1AA	2522	420	649
C1XD	2038	420	488	C1AB	3205	520	727
C14A	1456	300	475	C1BA	2840	520	727
C14B	1665	300	475	C1BB	4350	752	892
C14D	2137	360	488	C1CA	4025	752	892
C15A	1517	300	475	C1CB	4900	778	943
C15B	1834	360	488	C1CK	4900	778	943
C15D	2762	420	609	C1DA	4350	752	892

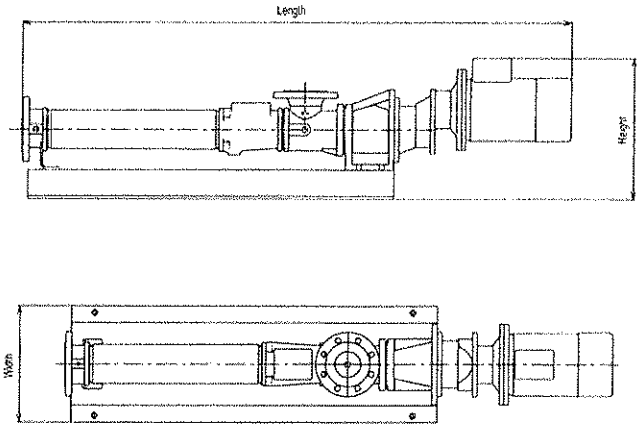

MODEL	LENGTH	WIDTH	HEIGHT	MODEL	LENGTH	WIDTH	HEIGHT
S14A	1456	300	475	C21B	984	300	304
S14K	1665	300	475	C21D	1149	300	304
S15A	1517	300	475	C22A	984	300	304
S15K	1777	360	475	C22B	1149	300	304
S16A	1635	360	488	C22D	1544	300	304
S16K	1947	360	488	C23A	1084	300	304
S17A	2066	360	584	C23B	1234	300	304
S17K	2464	360	609	C23K	1234	300	304
S18A	2202	360	584				
S18K	2640	420	609				

All dimensions in mm's and refer to the largest selected drive.
Dimensions are for guidance only, for full certified drawings, please contact Mono.

Europe

Mono Pumps Ltd, Martin Street
Audenshaw, Manchester
M34 5JA, England
T. +44 (0)161 339 9000
E. info@mono-pumps.com

D.M.I EST, 56 rue du Pont
88300 Rebeuville, France
T. +33 (0)3 29 94 26 88
E. dmi-est@dmi-est.fr

Americas

Monoflo, 9700 West Gulf Bank
Houston, Texas 77040, USA
T. +1 281 272 7700
E. inquire@monoflo.com

Monoflo S.A., Ing Huergo 2239
(1842) Monte Grande
Pcia de Buenos Aires, Argentina
T. +54 11 4290 9940/50
E. info@monoflo.com.ar

Monoflo Canada
6010 - 53rd Ave
Alberta, Lloydminster
T9V2T2, Canada
T. +1 780 875 5584
E. info.monoflo@nov.com

Australasia

Mono Pumps (Australia) Pty Ltd
338-348 Lower Dandenong Road
Mordialloc, Victoria 3195
Australia
T. 1800 333 138
E. ozsales@mono-pumps.com

Mono Pumps (New Zealand) Ltd
PO Box 71-021, Fremlin Place
Avondale, Auckland 7
New Zealand
T. +64 (0)9 829 0333
E. info@mono-pumps.co.nz

Asia

Mono Pumps Ltd
No. 500 YaGang Road
Lujia Village, Malu
Jiading District
Shanghai 201801, P.R. China
T. +86 (0)21 5915 7168
E. monoshanghai@nov.com

www.mono-pumps.com

Published information other than that marked CERTIFIED does not extend any warranty or representation, expressed or implied, regarding these products. Any such warranties or other terms and conditions of sales and products shall be in accordance with Mono Pumps Limited standard terms and conditions of sale, available on request

© Mono Pumps Limited May 2009 Literature reference: MPSB/01/01/R3

Mono® is a registered trademark of Mono Pumps Ltd
Registered in England No 300721

Products on recycled paper

Mono®

One Company, Unlimited Solutions

3/12/18

Lloyd's Register
LRQA

Certificate of Approval

This is to certify that the Management System of:

NOV Process & Flow Technologies UK Limited

Greengate, Middleton, Manchester, M24 1SA, United Kingdom
has been approved by LRQA to the following standards:

ISO 9001:2008

David Derrick
Issued By: Lloyd's Register Quality Assurance Ltd

Current Issue Date: 11 December 2016
Expiry Date: 14 September 2018
Certificate Identity Number: 10006275

Original Approvals:
ISO 9001 1 June 1990

Approval Numbers: ISO 9001 – 00004265

The scope of this approval is applicable to:

Design, manufacture, installation, service and repair of progressing cavity positive displacement pumps, pumping systems , screening equipment, disintegrators, drive arrangements and ancillary plant and provision of associated spares

UKAS
MANAGEMENT
SYSTEMS
001

Lloyd's Register Group Limited, its affiliates and subsidiaries, including Lloyd's Register Quality Assurance Limited (LRQA), and their respective officers, employees or agents are, individually and collectively, referred to in this clause as 'Lloyd's Register'. Lloyd's Register assumes no responsibility and shall not be liable to any person for any loss, damage or expense caused by reliance on the information or advice in this document or howsoever provided, unless that person has signed a contract with the relevant Lloyd's Register entity for the provision of this information or advice and in that case any responsibility or liability is exclusively on the terms and conditions set out in that contract.
Issued By: Lloyd's Register Quality Assurance Ltd, 1 Trinity Park, Bickenhill Lane, Birmingham B37 7ES, United Kingdom

31/12/18

24 June 2015

For the attention of the Accounts Manager

Dear Sir or Madam

Change of Name for Mono Pumps Limited

With effect from 1 July 2015, Mono Pumps Limited will change its name to **NOV Process & Flow Technologies UK Limited.**

What is changing and why?
The only detail that is changing is the legal entity name. Mono Pumps Limited will be renamed **NOV Process & Flow Technologies UK Limited.** The reason for the change of name is that the entity now supplies an increased number of branded products and it is no longer relevant to solely refer to one of those brands in our legal entity name.

What is remaining the same?
This is simply a change of name for a legal entity you are already trading with. The company is still registered in England under registration number 00300721 and its registered office remains Stonedale Road, Oldends Lane Industrial Estate, Stonehouse, Gloucestershire, GL10 3RQ.
The VAT number remains GB 582 8958 76.

You can reach all of your contacts as normal at Greengate, Middleton, Manchester, M24 1SA.

Our Bank details will remain the same although the bank account name will change as follows:

Account Name:	NOV Process & Flow Technologies UK Limited
Bank:	Barclays Bank Plc
Address:	163-165 Union Street
	Aberdeen, AB11 6AL
Sort Code:	20-00-77
Swift:	BARCGB22

Account Sterling:
Account Number : 73135497
IBAN : GB23BARC 200077 73135497

Account US Dollar:
Account Number: 54306488
IBAN : GB58BARC 200077 54306488

Account Euro:
Account Number: 89853577
IBAN : GB05BARC 200077 89853577

+44(0) 161 339 9000

NOV Process & Flow Technologies UK Limited
Greengate Way
Middleton
Manchester
M24 1SA

NOV Process & Flow Technologies UK Limited
Registered in England No: 00300721
Registered Office:
Stonedale Road
Oldends Lane Industrial Estate
Stonehouse, Gloucestershire
GL10 3RQ

3/12198

Cheques should be made payable to NOV Process & Flow Technologies UK Limited.

Should you have any questions regarding this letter, please contact our accounts receivable department on +44 (0)161 339 9000.

Yours faithfully

Alastair Fleming
UK Country Controller

+44(0) 161 339 9000

NOV Process & Flow Technologies UK Limited
Greengate Way
Middleton
Manchester
M24 1SA

NOV Process & Flow Technologies UK Limited
Registered in England No: 00300721
Registered Office:
Stonedale Road
Oldends Lane Industrial Estate
Stonehouse, Gloucestershire
GL10 3RQ

31/12/18

8.2 SLUDGE HOLDING TANK

3/72/18

Mixer data sheet

WILO SE, Werk Hof
Heimgartenstraße 1-3
Postfach 3309 - D-95030 Hof/Saale
T: +49 9281 974-540 F: +49 9281 974-133
ctwwt@wilo.com www.wilo.com

ID	17-ORH-GR-AB-1-0001
Project country	Greece
Project name	WWTP MONDENEGRO
Position	1 Anoxic tank
Date	2017-09-01
Enquiry	

Data for selection

Mixed liquid

Kind	Activated sludge	
Density	1000	kg/m³
pH value	7	
Temperature	20	°C
Dry solids content	0,5	%
Flow behaviour	Newton flow	
Kind of thickening	None	
Additional thickener	No	

Solids

Origin	Municipal	
Kind	Sludge	
Solid size	Not determined	

Mixing task

Operating mode	Continuous	
Mixing task	Suspend	
Average calculated flow velocity[1]	0,3	m/s

Tank

Material	Concrete	
Outlet	On bottom, laterally at the tank edge	
Tank shape	Round tank	
Tank volume	60,87	m³
Vertical / inclined walls	Tank with vertical walls	
Upper diameter	5	m
Tank height	3,1	m
Maximum filling level	3,1	m
Minimum filling level	3,1	m
Relevant filling level	3,1	m

Preparation

Preparation	Screen with gap width < 10 mm, but no pre-clarification

3/12/18

WILO SE, Werk Hof
Heimgartenstraße 1-3
Postfach 3309 - D-95030 Hof/Saale
T: +49 9281 974-540 F: +49 9281 974-133
ctwwt@wilo.com www.wilo.com

ID	17-ORH-GR-AB-1-0001
Project country	Greece
Project name	WWTP MONDENEGRO
Position	1 Anoxic tank
Date	2017-09-01
Enquiry	

Aeration

Kind	Without

Tank particularities

Default

Remarks regarding the selection process

The mixing result depends on the functional quality of the plant equipment in the mechanical treatment stage (preliminary treatment). Mineral fractions (grit and sand) must be always excluded from the process and cannot be kept in suspension. It is absolutely required to check the values mentioned above with the actual values on site.

3/12/18

WILO SE, Werk Hof
Heimgartenstraße 1-3
Postfach 3309 - D-95030 Hof/Saale
T: +49 9281 974-540 F: +49 9281 974-133
ctwwt@wilo.com www.wilo.com

ID	17-ORH-GR-AB-1-0001
Project country	Greece
Project name	WWTP MONDENEGRO
Position	1 Anoxic tank
Date	2017-09-01
Enquiry	

Selection of submersible mixers

Proposal

Type	TR 21.145-4/11 S14	
Quantity	1	
Frequency	50	Hz
Rated power	1,3	kW
Propeller speed	1390	1/min
Power factor (ISO 21630)	200	N/kW
Propeller diameter	0,21	m
Maximum power input	1,74	kW
Power input in duty point	*1 1,2	kW
System-dependent power input	*2 1,08	kW
Power density	*3 19,7	W/m³
System-dependent power density	*4 17,7	W/m³
Distance to water surface	0,2	m

*1 Measurement at static thrust acc. to ISO 21630 (inflow velocity ~0, Open Sea conditions).
*2 The power consumption of the mixer will be reduced in proportion to the flow velocity which is generated in the tank.
*3 According to ISO 21630.
*4 According to site conditions.

Important note

Installation of the mixer(s) according to installation sketch. Before installing the mixers, the up-to-date tank plans must be submitted without previous request to WILO SE, Hof for revision.

To guarantee a continuous operation, the minimum water cover above the propeller specified by WILO must be ensured.
Please check if our basic data are identical to your application and, if necessary, inform us in writing about modifications/objections. The aforementioned mixer(s) selection data are integral part of our warranty, whereas our warranty comes only into effect, when the submersible mixers are installed according to our recommendation. Because the overall function depends considerably on the correct positioning of the submersible mixers, we will not accept any warranty claims which result from positioning which we did not approve explicitly. Also zones of weak flow due to the tank geometry are not part of our warranty. The values of maximum power input, power input in the duty point and energy density are valid for clean water. Furthermore the use of our submersible mixers in patented procedures or under trade mark rights of third parties is excluded from our liability.

[1]In case of rectangular or round tanks the average flow velocity above the tank section cannot be guaranteed.
For the selected tank shape no directed circulating flow can be generated for physical reasons. The calculated average flow velocity refers only to an undirected turbulent flow.

3/12/18

All attached notes relating to the product and the selection are part of the technical selection of WILO SE.

Installation proposal

WILO SE, Werk Hof
Heimgartenstraße 1-3
Postfach 3309 - D-95030 Hof/Saale
T: +49 9281 974-540 F: +49 9281 974-133
ctwwt@wilo.com www.wilo.com

ID	17-ORH-GR-AB-1-0001
Project country	Greece
Project name	WWTP MONDENEGRO
Position	1 Anoxic tank
Date	2017-09-01
Mixer	TR 21.145-4/11 S14
Enquiry	

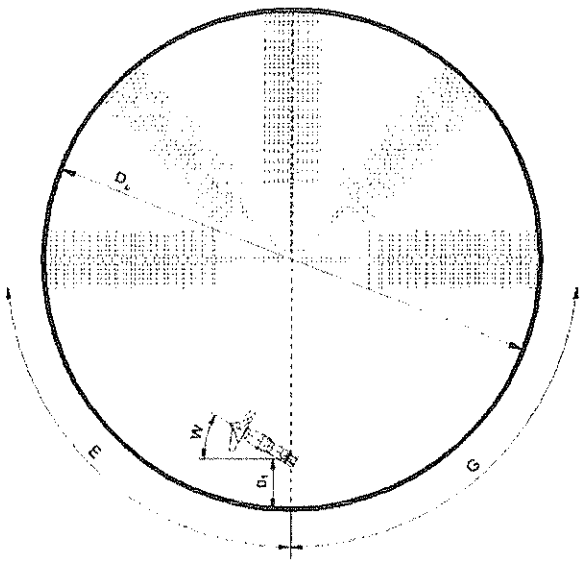

Installation recommendation regarding to miscellaneous minimum distances

n *	1	
W	45	°
G	1	m
NI *	1	

Du	5	m
E	1,5	m
D1	0,5	m

* n = no. of mixer per tank, NI = no. of installation positions per tank

3/12/18

WILO SE, Werk Hof
Heimgartenstraße 1-3
Postfach 3309 · D-95030 Hof/Saale
T: +49 9281 974-540 F: +49 9281 974-133
ctwwt@wilo.com www.wilo.com

ID	17-ORH-GR-AB-1-0001
Project country	Greece
Project name	WWTP MONDENEGRO
Position	1 Anoxic tank
Date	2017-09-01
Mixer	TR 21.145-4/11 S14
Enquiry	

Hints

The enclosed installation proposal is a schematic drawing and not according to scale. It serves as orientation guide. In case of order, the feasibility of this installation has to be matched with the tank drawing and the actual conditions. If there is an inflow and/or outflow in the immediate vicinity of the mixer, the mixer position must be checked based on updated tank plans to avoid bad influences on the mixer and short-circuit flows.

3/12/18

Abmessungen für Tauchmotorrührwerk
MINIPROP TR 21

Dimensions of Submersible mixer **MINIPROP TR 21**

Dimensions du circulateur immergé **MINIPROP TR 21**

wilo
Heimgartenstraße 1-3 D-95030 Hof/Saale
Telefon +49 9281 974-0 Fax +49 9281 96528
www.wilo.com E-Mail: info@wilo.com

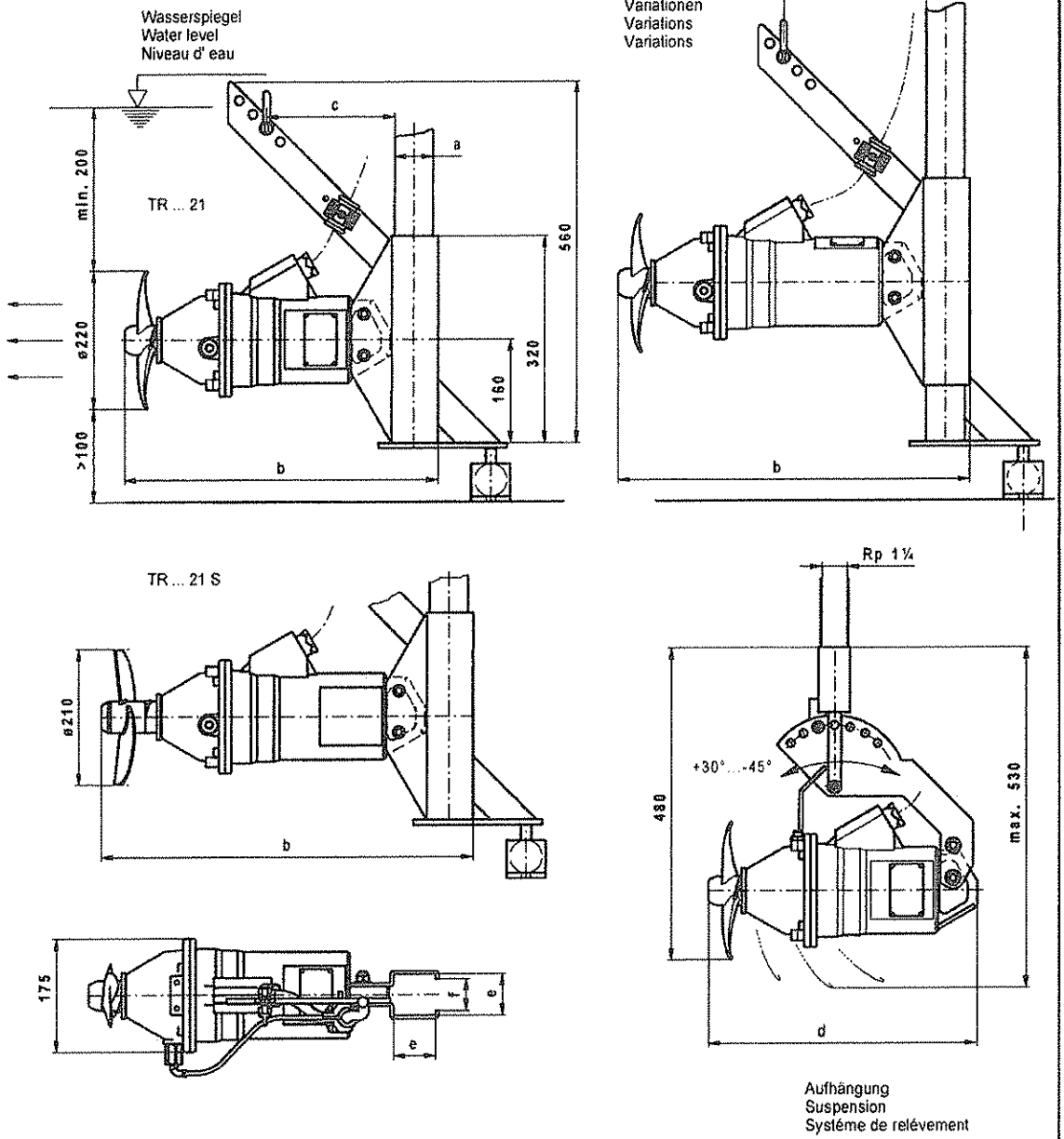

Motor / Motor type/ Type de moteur	T12G-4/6			T12G-4/11		
Gestänge-Gr./ Size of pipes / Dimension du tube	a = 60x60	a = 50x50	Suspension	a = 60x60	a = 50x50	Suspension
b	490/525*	480/515*		545/580*	535/570*	
c	200	200		220	220	
d			415/450*			470/505*
e	64	54		64	54	
f	40	32		40	32	
Gewicht / Weight / Poids	max. 32kg/35kg*			max. 37kg/40kg*		

* mit Stahlpropeller
with steel propeller
avec hélice en acier

Maßstab: 1:10 Technische Änderungen vorbehalten - Technical changes reserved - Modifications techniques réservées

Datum: 02.06.14 NP Mb015.prt

3/12/18

Pioneering for You

Data sheet
Wilo-EMU TR 21.145-4/11 S14

Design / Direction of rotation

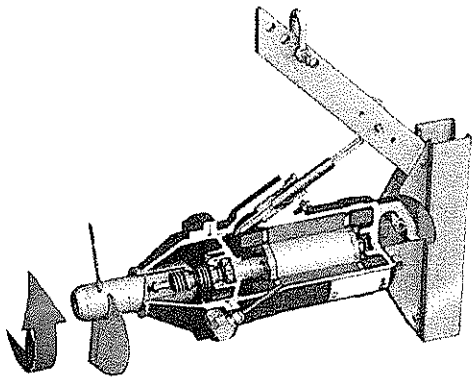

Unit	
Power consumption $P_{1.1}$	1.2 kW
Max. thrust F	240 N
Weight of unit m	28 kg
Max. weight* m	40 kg
Protection class	IP 68
Explosion protection	ATEX, FM
Ex classification ATEX	II 2G EEx d IIB T4
Ex classification FM	CLASS I, DIV. 1, GROUPS C, D; CLASS II, DIV. 1, GROUPS E, F, G; CLASS III

* = maximum weight including accessories

Propeller	
Propeller model	2-blade propeller with self-cleaning hub; backward-curved as a result clogging- and entwining-free
Nominal propeller diameter	210 mm
Propeller speed n	1392 rpm
Transmission ratio	1
Fill quantities and types	
Filling sealing chamber	White oil
Fill level sealing chamber V	0.35 l

Motor data	
Type of motor	T 12-4/11 (Ex)
Motor type	Submersible motor according to DIN/VDE 0530 (IEC 34)
Mains connection	3~400 V, 50 Hz
Rated current I_N	3.3 A
Starting current - direct I_A	16 A
Starting current - star-delta I_A	6 A
Power consumption P_1	1.74 kW
Rated power P_2	1.3 kW
Rated speed n	1392 rpm
Motor efficiency level	-
Efficiency η_M	75.0 %
Power factor $\cos \varphi$	0.76
Fluid temperature T	+3 ... +40 °C
Max. immersion depth	20 m
Insulation class	H
Max. switching frequency t	15 /h
min. switching break t	3 min
Starting torque M	19.8 Nm
Moment of inertia	0.0021 kg/m^2
Motor bearings	1 grooved ball bearing
Materials	
Motor housing	EN-GJL-250
Motor shaft	1.4021
Static seal	FPM
Sealing on pump side	SiC/SiC
Sealing on motor side	SiC/SiC
Propeller	1.4571

3/12/18

8.3 SLUDGE MECHANICAL DEWATERING UNIT

3/9/18

Data/Date: 2017/09/04
To: KARKANIAS ENVIRONMENTAL TECHNOLOGY SA

Food & Water

Alfa Laval AEBE

20th Km Lavrion Avenue Thesis Karella
19400 Koropi – Attica
Greece

www.alfalaval.gr

A COMPLETE SPECTRUM of wastewater treatment equipment

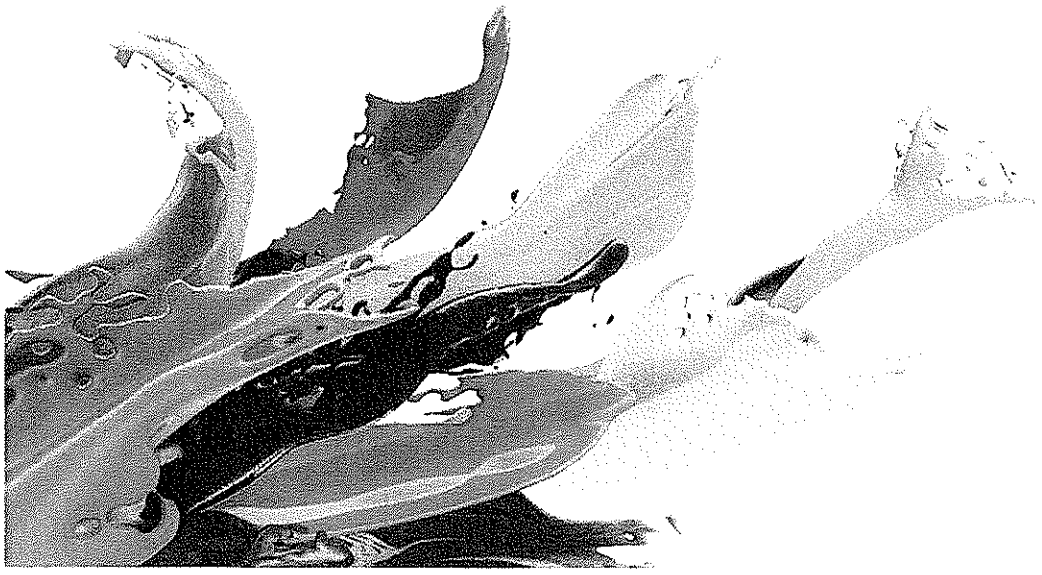

OFFER N°: 170904

3/12/18

1. INDEX

1. INDEX 2
2. INTRODUCTION 3
3. PROJECT DATA 4
4. GENERAL DESCRIPTION 6
5. SPARE & WEAR PARTS FOR 1 YEAR OF COMMISSIONING 13
6. BATTERY LIMITS 14
7. EXCLUSIONS 15

3/12/18

2. INTRODUCTION

Dear Sirs,
thank you very much for your inquiry. We are pleased to provide our Quotation for **N. 1 ALFA LAVAL dencanter centrifuge model ALDEC 45 VFD,** which is recommended by Alfa Laval Corporate AEBE (AL) for the *WWTP DANILOVDRAD MONTENEGRO.*

The equipment described in this proposal is recommended on the base of the received requirements.

Our local Service can be on your site for maintenance, repairs and installation optimization very quickly. Spare parts are stored in 3 Regional Distribution Centers (Netherlands, Singapore, USA) to guarantee spares delivery in less than 48 hours.

For further details we invite you to examine also the possible documents attached.

Finally, for any further questions or clarifications about it you can contact us directly:

George Asteris
Regional Sales Manager, Food & Water Division
Tel direct: +30 210 668 35 72 mobile: +30 6932402332
george.asteris@alfalaval.com

3/12/18

3. PROJECT DATA

3.1 GENERAL DATA

Sludge origin	Municipal
Sludge type	Oxidation Ditch Sludge
Duty	Dewatering

Hydraulic feed flow rate of the equipment (m^3/h)	≤5
Sludge feed concentration (%)	≤2,5
Solids load (KgSS/h)	≤125
Estimated concentration of inlet volatiles (%)	≤70

Centrifuge Performance expected:

Expected cake solids (%)	Dewatering: ≥23±1
Expected recovery (%)	≥95
Expected polymer dosage consumption (Kg/t SS)	≤10 The expected consumption refers to a polyeletrolite with an activity of 100%. Possible changes in the sludge type could required the change of the used polyelectrolyte terms of type and quantity. The control, choice and supply of the polyelctrtolyte according to the sludge carachteristics is part of the WWTP management and is a customer's responsibility. The use of a polyeletrolyte not correctly selected can influence the decanter performances.

3/12/18

3.2 HAZARDOUS COMPOUNDS

EROSIVE COMPOUNDS*	Silicates e Sands > 500 ppm
CORROSIVE COMPOUNDS	Cl- Fl- and other corrosive coumpounds
OTHER COMPOUNDS	FeO_2 and F_eO_3
PARTICULATE (organic and inorganic) WITH DIMENSIONS *	> 5mm

*=we suggest, if not already existing, to install before decanter a macerator and a grit chamber.

3/12/18

4. GENERAL DESCRIPTION

4.1 CENTRIFUGE MODEL ALDEC GENERAL DESCRIPTION

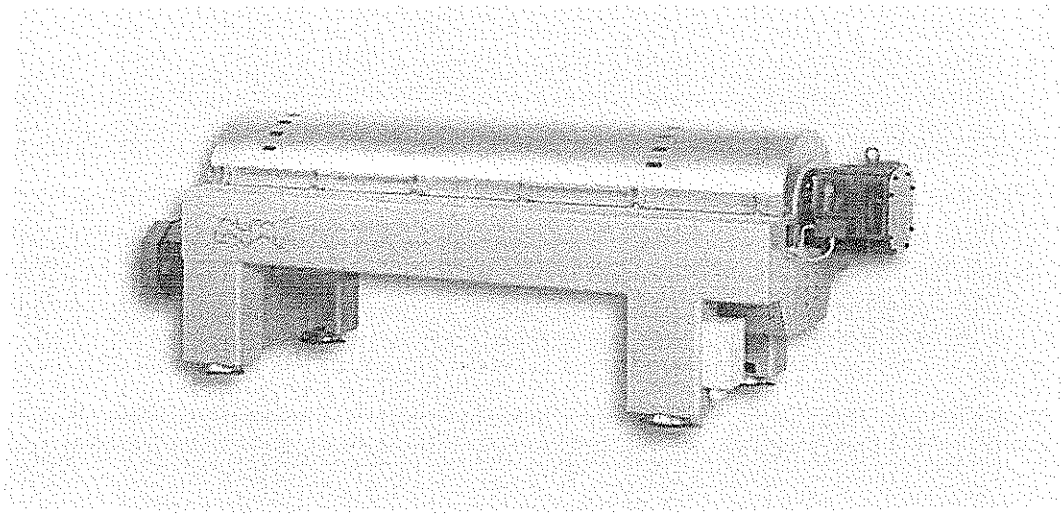

Alfa Laval Decanter ALDEC

The ALDEC is an open, non-pressured horizontal centrifuge. It features a solid horizontal bowl and scroll type conveyor, with counter current flow design.

Gearbox
The gearbox is equipped with a three-stage planetary gear reducer unit which controls the maximum differential speed between the centrifuge bowl and conveyor.

Frame and Casing
The frame and casing is a box beam profile type with integral casing. The inside surface of the casing consists of steel liners in the discharge areas and a painted surface in the neutral compartment.

Conveyor
The screw conveyor includes a forward type feed zone and a baffle disc.

Bowl
The bowl is manufactured from a centrifugal fusion.
Prior to final machining, all surfaces are examined for cracks, shrinkage, prodity or other defects.
The clarified liquid leaves the bowl by flowing over adjustable plate dams into the casing.

Wear Protection
The conveyor flights are protected with TM40 flame sprayed tungsten carbide on the tip only.
The conveyor feed zone is protected with flame sprayed tungsten carbide.
The solids dicharge area is protected with a wear liner of tungsten carbide.
A wear liner is installed in the upper casing.

3/12/18

Electrical Components and Control Systems

The electrical components consist of a main-motor drive and a back-drive motor type ABB with VFD.

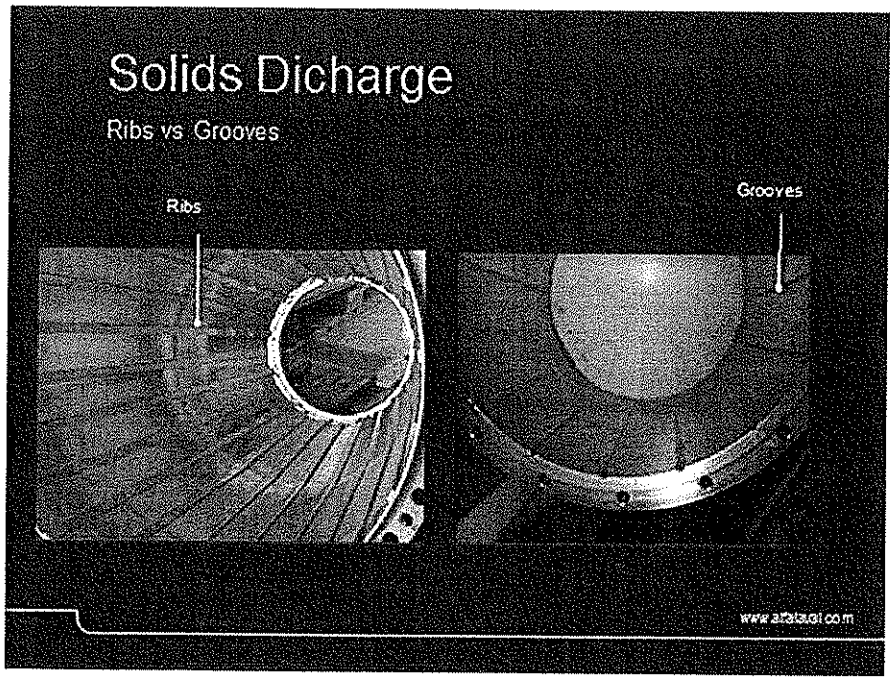

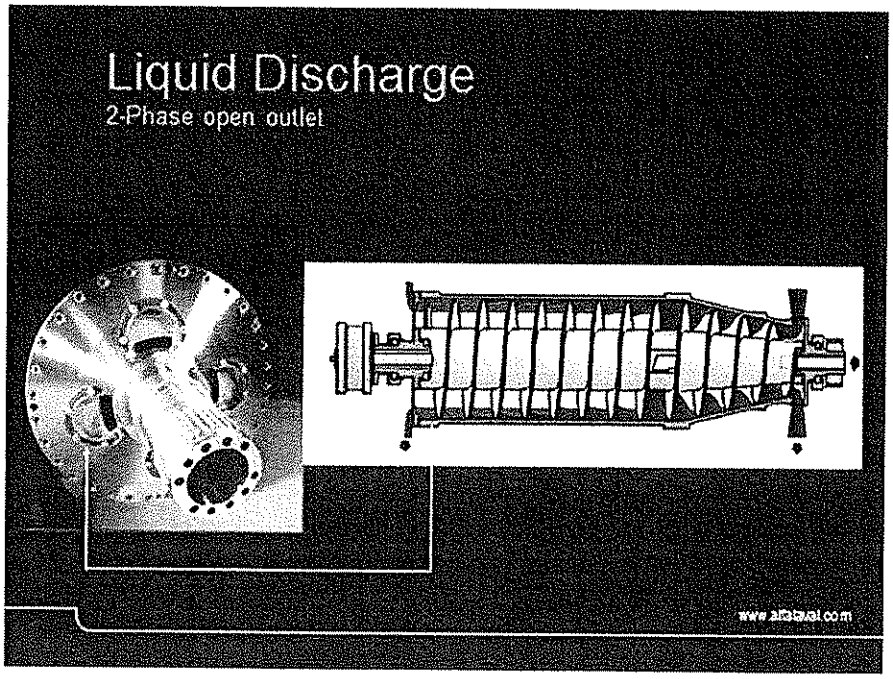

3/12/17

7

4.2 DATA SHEET ALDEC 45

N° 1 BOWL	
Diameter	360 mm
Lenght	1512 mm
Maximum main speed	4.200 rpm
G-force at operating speed	3.549 g
Material - bowl shell	AISI 316
Material - hubs	Duplex SS
Materiale – bolts	AISI 316
Beach angle	20°
WEAR PROTECTION	
Solids trasportation aids, cylindrical and taper section	Ribs in AISI 316
Solids dicharge	Tungsten carbide
N°1 CONVEYOR	
Pitch	130 mm
Flight thickness	4 mm
Material flights and hub	AISI 316
WEAR PROTECTION	
Flame sprayed tungsten carbide on tip flights.	
N°1 FRAME AND CASING	
Type frame-casing	Box beam profile with integral casing
Material - frame	Mild steel colour medium blue NCS 3560 R75B
Material casing	SS AISI 316
Wear protection	Wear liner in AISI 304 on discharge area/ discharge clarified
N°1 MAIN MOTOR	
Type ABB, VFD 15 kW , 3x380V, 50 Hz. IP55 type.	
N° 1 BACK DRIVE	
Type ABB, VFD 5.5 kW , 3x380V, 50 Hz. IP55 type.	
N° 1 GEAR BOX	
Type	Planetary 2 stage
Ratio	1: 159
Max. torque	2,5 kNm
Max differential speed and torque	44 rpm at 2,5 kNm
Differenzial speed conveyor regulation	by inverter
N°1 CONTROL SYSTEM	
Type BCC. See decription below.	
LUBRIFICATION	
Grease.	

3/12/18

4.3 NOISE DECLARATION ALDEC 45

RUMORE ALDEC 45		
Bowl speed [rpm]	Sound power L_{wAd} [B(A) re 1pW]	Sound pressure L_{pAd} [dB(A) re 20mPa]
4.200	9,7	79

L_{wAd} : declared A-weighted sound power level from the decanter.
L_{pAd} : declared A-weighted emission sound pressure level in a free field over a reflecting plane at 1 m distance from the decanter

Uncertainty on declared values:
L_{wAd} : K_{wA} = 2 dB
L_{pAd} : K_{pA} = 4 dB

The emission sound power level is measured according to ISO 9614-2 while operating the decanter with water as process medium. The sound pressure level is determined from the measured sound power level according to EN ISO 11203.

The sound pressure level can vary – 1 dB a + 2 dB at different positions around the decanter.
Noise emission data for the decanter declared in accordance with the requirements in EN ISO 4871 e EN 12547.

4.4 OTHER EQUIPMENTS

N°2 CONTROL PANEL	• Control panel in compliance with the technical specification.
OTHER	• N.1 Intermediate Kit conveyor bearings • N.1 set of liquid levels • N.1 set of special tools • N. 1 instruction manual in english + N. 1 copy on CD • Packing according to our standard
ENGINEERING	Unless otherwise specified the decanter will be installed according to the P&ID attached.

4.5 DECANTER OPERATING PRINCIPLE

WORKING OPERATION

The solid-liquid separation takes place in a horizontal cylindrical bowl equipped with a screw conveyor. The feed enters the decanter at the intersection of the conical and the cylindrical part of the bowl through a central feed pipe in the hollow drive shaft. After leaving the feed pipe, the feed suspension is distributed into the rotatign liquid in the bowl and smoothly accelerated to the full rotational speed. The centrifugal force makes the solids settle at the bowl shell. The screw conveyor continuously transports the solids toward the conical end of the bowl and through conical bowl part.

The separation takes place throughout the total length of the cylindrical part of the bowl, and the clarified liquid discharges at the large end where it flows over the rim of exchangeable and/or adjustable plate dams or power tubes.

The solids are discharged from the small end by centrifugal force through outlet opening.

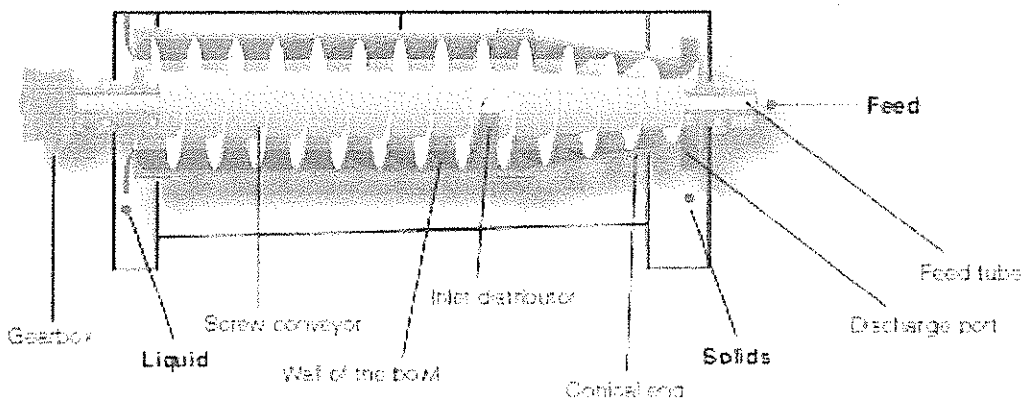

DRIVE SYSTEM

The decanter is driven by an electric motor. The motor shaft carries a drive pulley, and motive power is trasmitted through V-belts to the bowl pulley to drive the bowl.
Power is transferred to the conveyor via a planetary gearbox.

Gearbox (GB) lower the supplied power from the BackDrive (BD) and allows for the torque required by the conveyor. It's all about controlling the Sunwheel Shaft (SS) speed.

The SS is connected directly to the BD system. Controlling the SS speed controls the speed of the Spline shaft which is directly conneted to the conveyor speed and thereby controls the differential speed. The planetary GB has two stages. To create a differential speed with a planetary GB it's required to brake the SS duting normal operation. To run with higher differential speed the direction of SS hence the direction of the BD needs to be reversed.

3/12/18

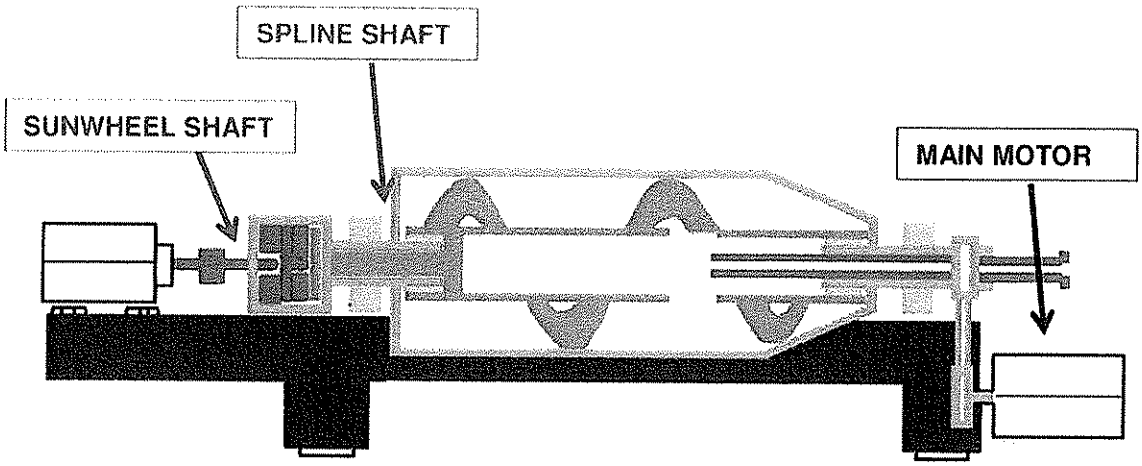

THE BASIC CORE CONTROLLER

The differential speed is controlled by a decanter controller, which takes care of all basic control functions related to the decanter. Each decanter is delivered with the Basic Core Controller (**BCC**). This control package is capable of fully controlling the decanter operation, ensuring the most efficient performance and keeping costs for installation, commissioning, operation and maintenance to a minimum.

The decanter BCC control system consist of:

- HMI panel,
- Core Controller;
- Frequency Drives.

The components are connected with bus communication as illustated below.

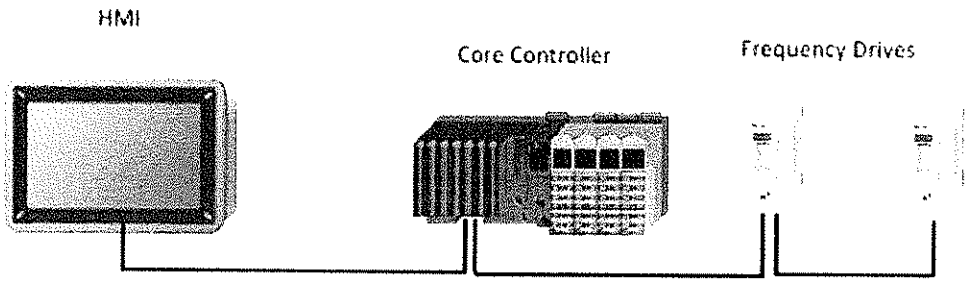

- **HMI panel**: is a 7"touch panel and handles the interaction between the human user and the control system (view machine and process variables, issue commands, adjust setpoint, acknoledge alarms, manual control of equipment and signal forcing and system configuration);
- **CORE CONTROLLER**: the essential job of the Core Controller CPU is to control the differential speed of the screw conveyor inside the decanter. Other tasks of the Core

Controller are: control the torque on the screw conveyor, maintain the control sequence of the machine and control auxiliary equipment and processes;

- **FREQUENCY DRIVES**: control the speed of the maindrive and backdrive motors on the decanter. Parameter setup, speed setpoints, alarm handling etc. in the frequency drives is managed by the Core Controller.

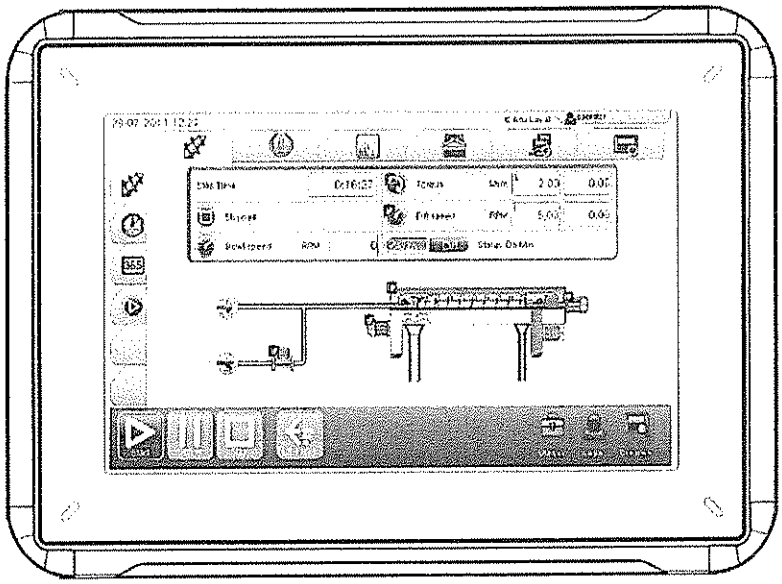

3172118

5. SPARE & WEAR PARTS FOR 1 YEAR OF COMMISSIONING

Listed below are the spare parts for 1 year of operation. They are provided with the decanter.

Description	Serial number	Quantity
GEAR OIL 4 L	6120367110	2
GREASE	6120367150	6
O-RING	6116720741	2
GASKET	52259102	4
BALL BEARING	1217400	2
LIP SEAL	6116732324	2

No wear parts are required.

6. BATTERY LIMITS

- Electric energy: at electrical terminal and decanter motors
(if control panel is supplied by AL: at electric switches)
- Sludge to treat: at sludge inlet connection installed as shown in the drawing attached (point A)
- Polyelectrolyte in emulsion already mixed: at inlet connection as shown in the drawing attached (point D)

3/12/18

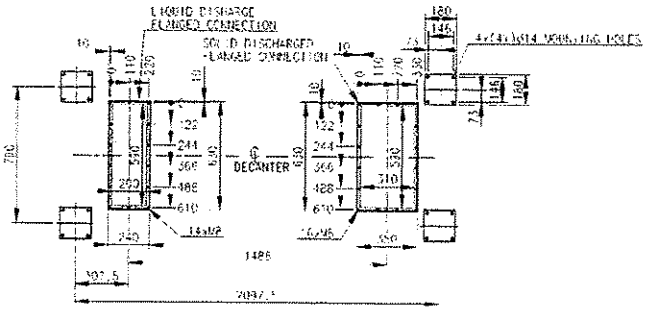

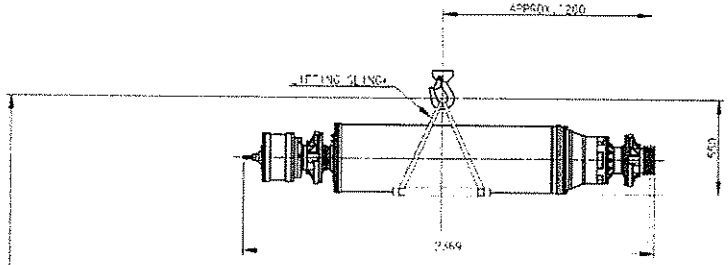

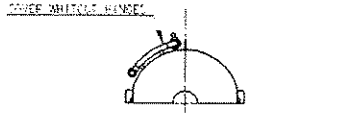

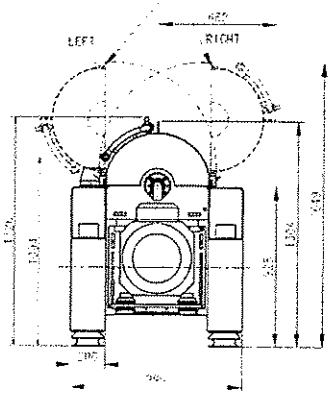

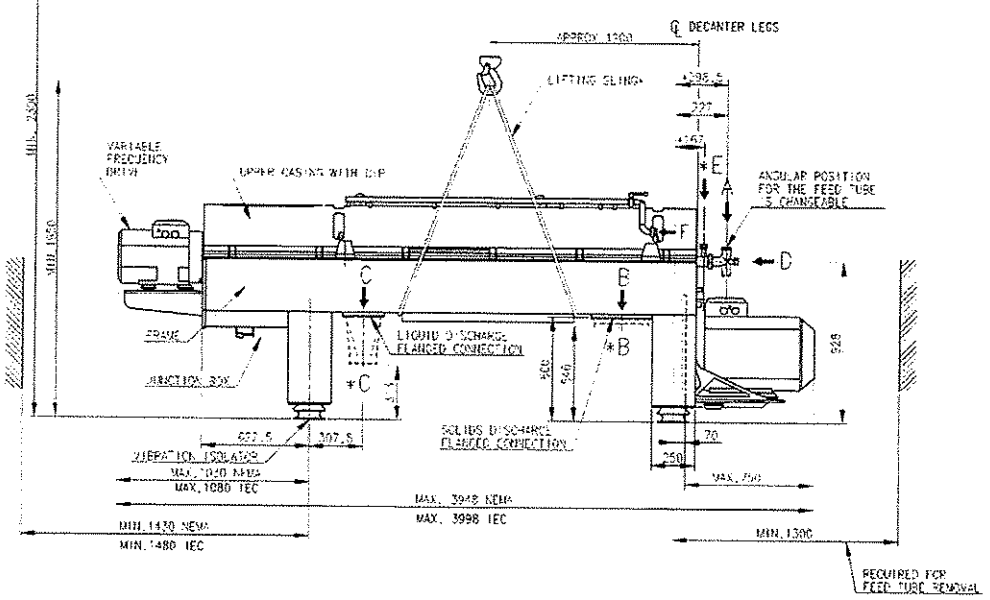

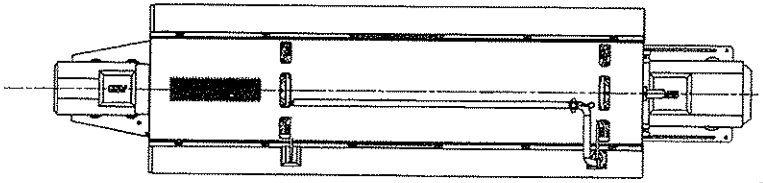

APPROXIMATE WEIGHTS:

TOTAL WEIGHT OF EMPTY DECANTER	2200kg	5071lbs
ROTATING ASSY INCL. PILLOW BLOCKS	600kg	1323lbs
CPL. FRAME ASSY EXCL. MAIN MOTOR AND ROT. ASSY.	1400kg	3087lbs
MAIN MOTOR INCL. MOTOR PLATE AND PULLEY	300kg	661lbs
UPPER CASING	150kg	331lbs
GEAR BOX	300kg	661lbs
MIN. CRANE CAPACITY FOR LIFTING OF ROTA. MO ASSY	1000kg	2205lbs

LOADING DATA:

DECANTER

1. MAX. STATIC LOAD

A- VERTICAL		24000N
B- HORISONTAL		0N

2. MAX. DYNAMIC LOAD AT RUN DOWN (ADD TO STATIC LOAD)

A- VERTICAL	±	8000N
B- HORIZONTAL	±	400DN

3. MAX. DYNAMIC LOAD AT OPERATING SPEED

A- VERTICAL	±	750N
B- HORISONTAL	±	750N

ALL LOADS ARE EVENLY DISTRIBUTED ON THE VIBRATION ISOLATORS

CONNECTIONS:

		DIMENSION / TYPE
A	FEED	Ø51 (2") HOSE CONNECTION
B	SOLIDS OUTLET	RECTANGULAR FLANGE
*B	SOLIDS OUTLET FUNNEL	590 x 310
*C	LIQUID OUTLET	RECTANGULAR FLANGE
*C	HEAVY PHASE LIQUID OUTLET FLANGE	Ø154 (6") HOSE CONNECTION
D	POLYMER ADDITION	ISO 228-G 3/4" B CONNECTION
*E	POLYMER ADDITION	ISO 228-G 3/4" B CONNECTION
*F	CIP/DILUTING WATER	B38 (1 1/2") WELDING FERRULE

NOTES:

1- ALL CONNECTIONS MUST BE FLEXIBLE.

2- FOR PROPER VENTING OF DISCHARGE HOPPERS, REFER TO THE INSTALLATION DRAWING. IMPROPER VENTING CAN LEAD TO LEAKAGE PROBLEMS.

3- CUSTOMER IS RESPONSIBLE FOR ANCHORING.

4- FOR FURTHER INFORMATION, SEE INSTALLATION DATA MANUAL AND INSTALLATION DRAWING.

* OPTIONAL EQUIPMENT

COMPLEMENTARY DRAWING: 61248248

P 12013

ALDEC

High-performance decanter for sludge thickening and dewatering

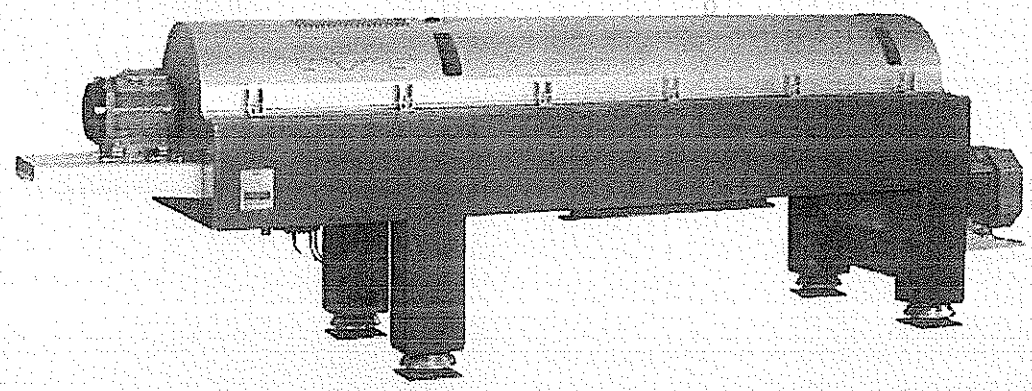

Applications

The Alfa Laval ALDEC range of decanter centrifuges are designed with a focus on cost-efficiency, reliability and easy operation. They are used for thickening and dewatering of sludge from municipal and industrial water and waste treatment plants.

ALDEC decanter centrifuges are capable of handling a wide range of flow rates. They are designed to be efficient, simple to install, easy to maintain and straightforward to operate. Installation, operating and service life costs are minimal.

Benefits

The ALDEC decanter centrifuge design provides a series of concrete benefits

- Reduces sludge volume, which cuts down on transport and disposal costs
- High capacity at small footprint: Compact, modular design saves space
- High performance combined with low energy consumption.

Features

- Critical parts made of wear-resistant material
- Fully open feed zone for improved separation
- 360° solids discharge to avoid blocking
- Baffle disc provides higher capacity and drier cake solids
- Steep or shallow cone configuration for optimum separation of any type of slurry
- Variety of conveyor design depending on type of slurry
- Variety of wear protection of conveyor flights for any demand
- Complete, fully enclosed cleaning-in-place (CIP)
- Floater disc for light particle removal (optional)

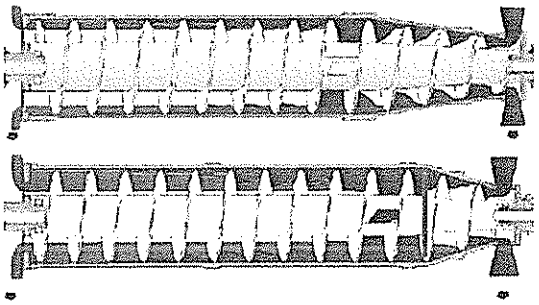

Shallow vs Steep cone configuration

Working principle

Separation takes place in a horizontal cylindrical bowl equipped with a screw conveyor (see drawing). The feed enters the bowl through a stationary inlet tube and is accelerated smoothly by an inlet distributor. The centrifugal force that results from the rotation then causes sedimentation of the solids on the wall of the bowl.

3/12/18

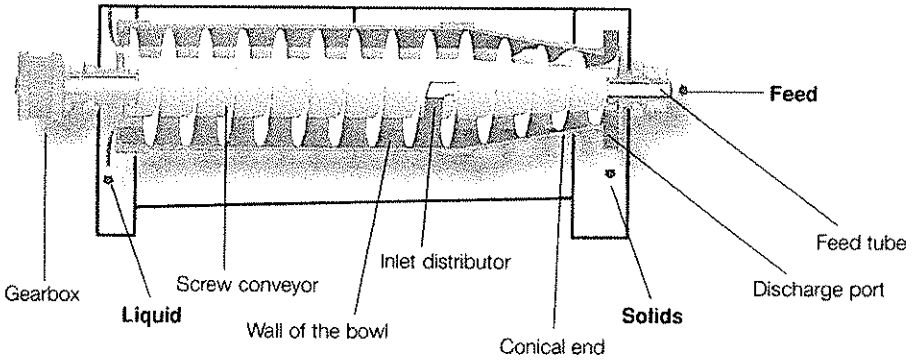

The conveyor rotates in the same direction as the bowl, but slightly slower, thus moving the solids towards the conical end of the bowl. The cake leaves the bowl through the solids discharge openings into the casing. Separation takes place throughout the entire length of the cylindrical part of the bowl, and the clarified liquid leaves the bowl by flowing over adjustable plate dams into the casing.

Process optimization
ALDEC decanter centrifuges can be adjusted to suit specific requirements by varying

- the bowl speed to obtain the G-force required for the most efficient separation
- the conveying speed for the most efficient balance between liquid clarity and solids dryness
- the pond depth in the bowl for the most efficient balance between liquid clarity and solids dryness

Design
The rotating part of ALDEC decanter centrifuges is mounted on a compact, in-line frame, with main bearings at both ends. Vibration dampers are placed under the frame. The rotating part is enclosed in a casing with a cover and a bottom section with integrated outlets for both solids and the liquid being removed.

Drive system
In all ALDEC decanter centrifuges, the bowl is driven by an electric motor and a V-belt transmission drive. Power is transferred to the conveyor via a planetary or Direct Drive gearbox. For smaller ALDEC decanters, countershaft transmission is an option.

Operation can either be pre-set to a suitable set of parameters, or the difference between the speeds of the bowl and the conveyor can be controlled automatically, with no need for changing belts or pulleys.

Materials
The bowl, conveyor, inlet tube, outlets, cover and other parts in direct contact with process media are all made of stainless steel. The discharge ports, conveyor flights and feed zone are

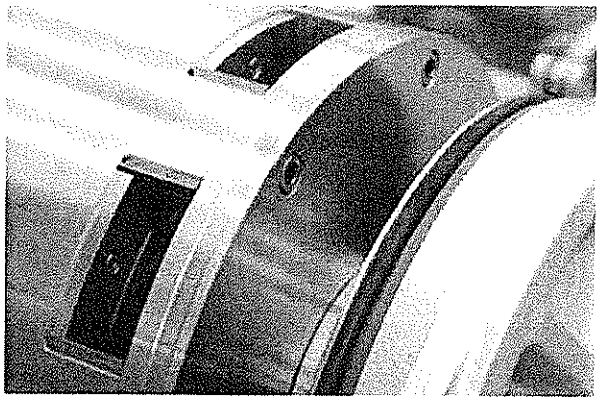
360° solids discharge, free from blocking

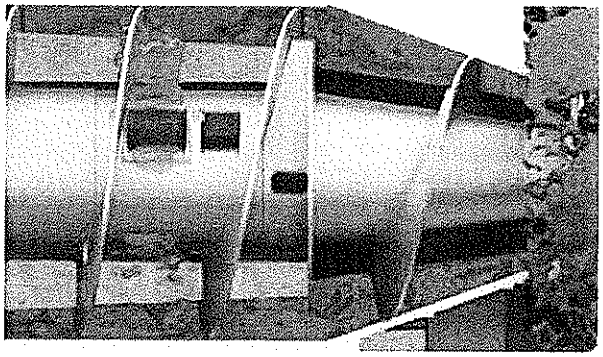
Baffle disc provides higher capacity and drier solids

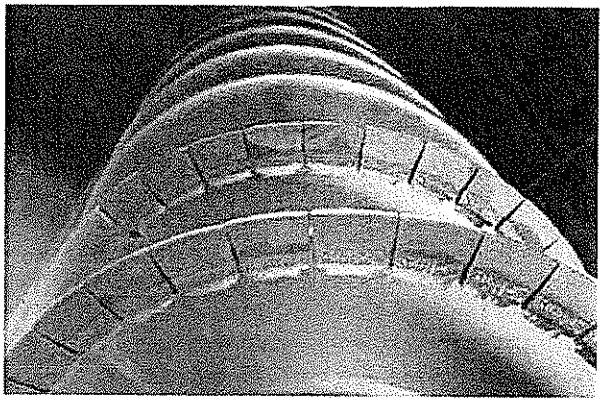
Sintered tungsten carbide tiles as wear protection for conveyor flights

3172178

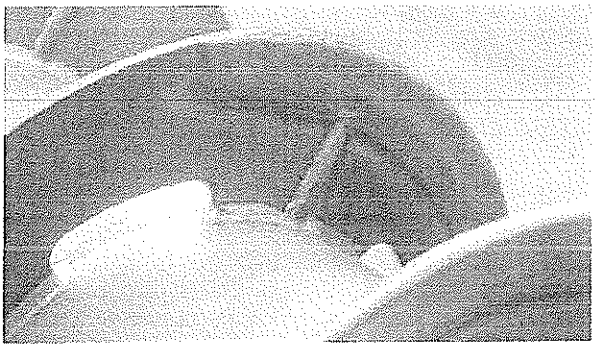

Flame sprayed tungsten carbide wear protection on conveyor flights

protected with materials that are highly resistant to erosion. Various types of additional optional wear protection can be added: conveyor flights protection with flame sprayed hard surfacing, and/or sintered tungsten carbide tiles. The frame is made of mild steel with an epoxy enamel finish.

The Basic Core Controller

Each decanter centrifuge in the ALDEC range equipped with a variable frequency drive (VFD) as standard is delivered with the Basic Core Controller (BCC). This control package is capable of fully controlling the decanter operation, ensuring the most efficient performance and keeping costs for installation, commissioning, operation and maintenance to a minimum. The controller is also designed to measure the temperature of the bearings, and to monitor vibration levels.

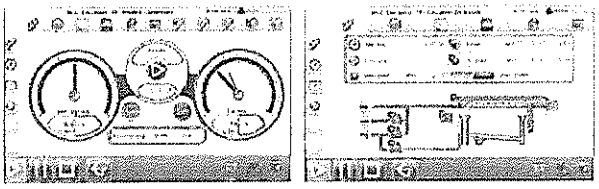

Technical specifications

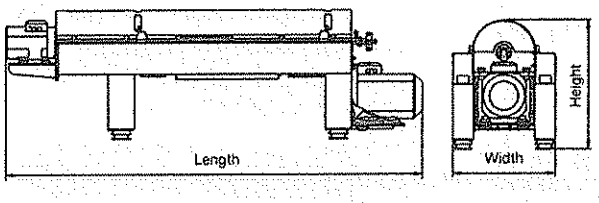

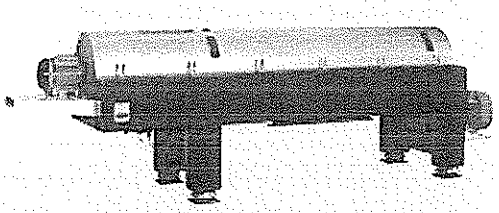

Designation	Length mm (inches)	Width mm (inches)	Height, max. mm (inches)	Max. weight kg (lbs)	Typical main drive size kW (HP)	Typical back drive* size kW (HP)	Start method
ALDEC 10	2,150 mm (85 inches)	580 mm (23 inches)	762 mm (30 inches)	375 kg (830 lbs)	4,0-11,0 kW (5-15 HP)	3 kW (4 HP)	Star-delta, VFD*
ALDEC 20	2,936 mm (116 inches)	780 mm (31 inches)	930 mm (37 inches)	1,125 kg (2,495 lbs)	11-18,5 kW (15-25 HP)	7.5 kW (10 HP)	Star-delta, VFD
ALDEC 30	3,216 mm (127 inches)	780 mm (31 inches)	930 mm (37 inches)	1,200 kg (2,660 lbs)	11-18,5 kW (15-25 HP)	7.5 kW (10 HP)	Star-delta, VFD
ALDEC 45	3,998 mm (168 inches)	990 mm (39 inches)	1,304 mm (51 inches)	2,300 kg (5,071 lbs)	11-22 kW (15-30 HP)	5.5 kW (7 HP)	Star-delta, VFD
ALDEC 75	4,959 mm (195 inches)	1,060 mm (42 inches)	1,376 mm (54 inches)	3,200 kg (7,050 lbs)	11-55 kW (50 HP)	5,5-11 kW (7,5-15 HP)	Star-delta, VFD
ALDEC 95	5,682 mm (224 inches)	1,150 mm (45 inches)	1,601 mm (63 inches)	4,500 kg (9,000 lbs)	18,5-90 kW (25-125 HP)	11-22 kW (15-30 HP)	VFD
ALDEC 105	5,842 mm (230 inches)	1,300 mm (51 inches)	1,696 mm (67 inches)	5,000 kg (1,1023 lbs)	30-132 kW (40-200 HP)	22 kW (30 HP)	VFD
ALDEC 115	6,502 mm (256 inches)	1,450 mm (57 inches)	1,791 mm (71 inches)	6,500 kg (14,300 lbs)	37-160 kW (50-200 HP)	15/30 kW (20/40 HP)	VFD
ALDEC 125	6,901 mm (264 inches)	1,510 mm (60 inches)	1,852 mm (73 inches)	8,600 kg (18,959 lbs)	55-250 kW (75-350 HP)	22/37 kW (30/50 HP)	VFD

* Variable frequency drive

Different materials of construction are available according to needs.

3/12/18

Lloyd's Register
LRQA

CERTIFICATE OF APPROVAL

This is to certify that the Management System of:

Alfa Laval (India) Limited
Operations Division
Mumbai - Pune Road, Dapodi,
Pune - 411 012,
INDIA

has been approved by Lloyd's Register Quality Assurance
to the following Management System Standard:

ISO 9001:2015

The Management System is applicable to:

- **The design management, manufacture of centrifugal disc stack separators, decanter centrifuges, centrifugal pumps, fittings, valves, plate type heat exchangers, welded heat exchangers, tubular heat exchangers and air heat exchangers including parts thereof.**
- **The manufacture of process modules comprising above equipment.**
- **The design and manufacture of process equipment, including food and pharma equipment.**

This certificate is valid only in association with the certificate schedule bearing the same number on which the locations applicable to this approval are listed.

Approval
Certificate No: MUM0060171

Original Approval: 23 December 1993

Current Certificate: 31 May 2017

Certificate Expiry: 31 May 2020

Issued by: Lloyd's Register Quality Assurance Limited

UKAS
MANAGEMENT
SYSTEMS
001

This certificate replaces and supersedes certificate no MUM0060171, issue dated 01 June 2014
LRQA Ltd, Unit 63 & 64, 6th Floor, Level 5, Kalpataru Square, Kondivita Lane, Off Andheri - Kurla Road, Andheri (East), Mumbai - 400 059, India
For and on behalf of LRQA Ltd, 1 Trinity Park, Bickenhill Lane, Birmingham, B37 7ES, United Kingdom.
This approval is carried out in accordance with the LRQA assessment and certification procedures and monitored by LRQA
The use of the UKAS Accreditation Mark indicates Accreditation in respect of those activities covered by the Accreditation Certificate Number 001
Management System 15

3/7/2018

Lloyd's Register Group Limited, its affiliates and subsidiaries, including Lloyd's Register Quality Assurance Limited (LRQA), and their respective officers, employees or agents are, individually and collectively, referred to in this clause as 'Lloyd's Register'. Lloyd's Register assumes no responsibility and shall not be liable to any person for any loss, damage or expense caused by reliance on the information or advice in this document or howsoever provided, unless that person has signed a contract with the relevant Lloyd's Register entity for the provision of this information or advice and that case any responsibility or liability is exclusively on the terms and conditions set out in that contract.

Lloyd's Register
LRQA

CERTIFICATE SCHEDULE

Alfa Laval (India) Limited
Operations Division
Mumbai - Pune Road, Dapodi,
Pune - 411 012,
INDIA

Head Office:

Alfa Laval (India) Limited,
Operations Division,
Mumbai - Pune Road, Dapodi,
Pune - 411 012, India

Activities:

- **The design management, manufacture of centrifugal disc stack separators, decanter centrifuges and parts thereof.**
- **The manufacture of process modules comprising above equipment.**
- **The design and manufacture of process equipment, including food and pharma equipment.**

Other Locations:

Alfa Laval (India) Limited,
Heat Exchanger Factory,
E7/E8, MIDC Estate,
Satara - 415 004, India

Activities:

- **The design management, manufacture plate heat exchangers, welded heat exchangers and tubular heat exchangers and parts thereof.**

Approval
Certificate No: MUM0060171

Original Approval: 23 December 1993

Current Certificate: 31 May 2017

Certificate Expiry: 31 May 2020

UKAS MANAGEMENT SYSTEMS
001

LRQA Ltd, Unit 63 & 64, 6th Floor, Level 5, Kalpataru Square, Kondivita Lane, Off Andheri - Kurla Road, Andheri (East), Mumbai - 400 059, India
For and on behalf of LRQA Ltd, 1 Trinity Park, Bickenhill Lane, Birmingham, B37 7ES, United Kingdom.

This approval is carried out in accordance with the LRQA assessment and certification procedures and monitored by LRQA
The use of the UKAS Accreditation Mark indicates Accreditation in respect of those activities covered by the Accreditation Certificate Number 001

Macro Revision 15

3/12/18

Lloyd's Register Group Limited, its affiliates and subsidiaries, including Lloyd's Register Quality Assurance Limited (LRQA), and their respective officers, employees or agents are, individually and collectively, referred to in this clause as 'Lloyd's Register'. Lloyd's Register assumes no responsibility and shall not be liable to any person for any loss, damage or expense caused by reliance on the information or advice in this document or howsoever provided, unless that person has signed a contract with the relevant Lloyd's Register entity for the provision of this information or advice and that case any responsibility or liability is exclusively on the terms and conditions set out in that contract

Lloyd's Register
LRQA

CERTIFICATE SCHEDULE

Alfa Laval (India) Limited
Operations Division
Mumbai - Pune Road, Dapodi,
Pune - 411 012,
INDIA

Other Locations:

Alfa Laval (India) Limited,
Flow Factory, Gat No. 30-33 & 74-82, Post:Sarole, Sarole–Veer Road, Tal:Bhor, Dist. Pune – 412 206, India

Alfa Laval (India) Limited,
Parts & Services,
Plot No. R 674, MIDC, Rabale,
TTC Industrial Area,
Navi Mumbai – 400 701, India

Activities:

- **The design management, manufacture air heat exchangers, valves, fittings and parts thereof.**

- **Procurement and Distribution of spare parts.**
- **Service of separators, decanter centrifuges, plate heat exchangers and pumps.**

Approval
Certificate No: MUM0060171

Original Approval: 23 December 1993

Current Certificate: 31 May 2017

Certificate Expiry: 31 May 2020

UKAS MANAGEMENT SYSTEMS
001

LRQA Ltd, Unit 63 & 64, 6th Floor, Level 5, Kalpataru Square, Kondivita Lane, Off Andheri - Kurla Road, Andheri (East), Mumbai - 400 059, India
For and on behalf of LRQA Ltd, 1 Trinity Park, Bickenhill Lane, Birmingham, B37 7ES, United Kingdom.
This approval is carried out in accordance with the LRQA assessment and certification procedures and monitored by LRQA
The use of the UKAS Accreditation Mark indicates Accreditation in respect of those activities covered by the Accreditation Certificate Number 001
Mark Review: 15

3/12/18

Lloyd's Register Group Limited, its affiliates and subsidiaries, including Lloyd's Register Quality Assurance Limited (LRQA), and their respective officers, employees or agents are, individually and collectively, referred to in this clause as 'Lloyd's Register'. Lloyd's Register assumes no responsibility and shall not be liable to any person for any loss, damage or expense caused by reliance on the information or advice in this document or howsoever provided, unless that person has signed a contract with the relevant Lloyd's Register entity for the provision of this information or advice and that case any responsibility or liability is exclusively on the terms and conditions set out in that contract

BUREAU VERITAS
Certification

Alfa Laval Copenhagen A/S

Maskinvej 3-5, 2860 Søborg, Denmark

Bureau Veritas Certification Holding SAS – UK Branch certifies that the Management System of the above organization has been audited and found to be in accordance with the requirements of the Management System standards detailed below.

Standard

ISO 9001:2008

Scope of certification

Design and manufacturing of decanter centrifuges.
Design, manufacturing and marketing of fresh water generators.
Manufacturing of ballast water treatment systems on vessels.

Certification cycle start date: **1 November 2015**

Subject to the continued satisfactory operation of the organization's Management System, this certificate expires on: **15 September 2018**

Original certification date: **18 October 1991**

Certificate no.: DK005724 Version: 1 Revision date: **27 October 2015**

Signed on behalf of BVCH SAS UK Branch

UKAS MANAGEMENT SYSTEMS
008

Certification body address: *5th Floor, 66 Prescot Street, London, E1 8HG, United Kingdom*
Local Office: *Oldenborggade 1B, 7000 Fredericia, Denmark*

Further clarifications regarding the scope of this certificate and the applicability of the Management System requirements may be obtained by consulting the organization.
To check this certificate validity, please call **(+45) 77 311 000.**

3/12/18

KARKANIAS
ENVIRONMENTAL TECHNOLOGY S.A.

SCREW DEWATERER CONVEYOR

Manufacturer General Specifications

Technical data:

Screw length	:	As specified
Spiral diameter	:	300 mm
Spiral cross section	:	20 x 50 mm
Driving unit	:	BONFIGLIOLI RIDUTTORI
Type	:	II 2 G EExe II T3

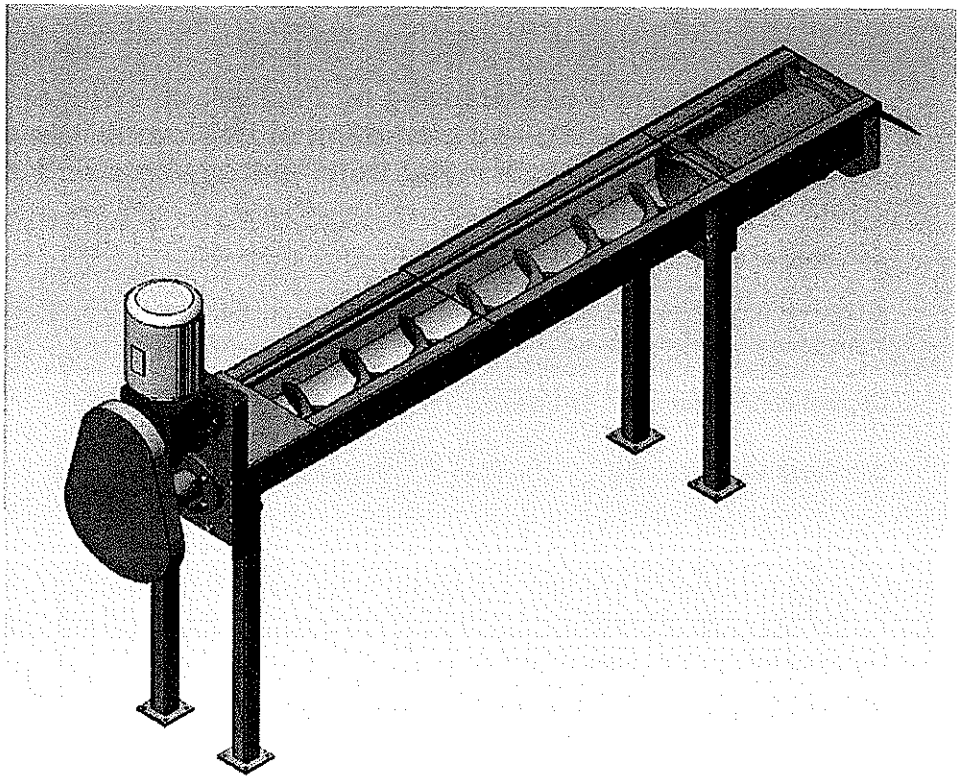

31/12/18

HEADQUARTERS:
Industrial Area of Larisa
Postal Code 41004, BOX 3053 Greece
www.karkanias.gr

Phone: +30 2410 541386
Fax: +30 2410 541354
Email: info@karkanias.gr

KARKANIAS
ENVIRONMENTAL TECHNOLOGY S.A.

Design

The entire screw conveyor is made of stainless steel grade 304L. It consists of a shaftless spiral surrounded by a trough. Between the spiral and the trough is installed appropriate plastic material (Teflon) in order to eliminate friction. The spiral is protected by covers, attached on the trough by means of fastening screws so it can be easily cleaned and maintained. Suitable number of hoppers is installed in order to receive screenings from coarse screens.

The driving unit is connected at the one end of the screw conveyor through a drive shaft which is equipped with double sealing flange. At the other end the compacting chamber is assembled. Compaction is achieved by the mean of a barrier steel plate. Compression plate works as an obstacle during screenings transfer so they can be compressed and free of condensate before discharge to the skip. Drainage water is drained off into a collecting pipe, which will be driven to the drainage system of the plant.

The screw conveyor can be manufactured in alternative stainless steel grade upon costumer request.

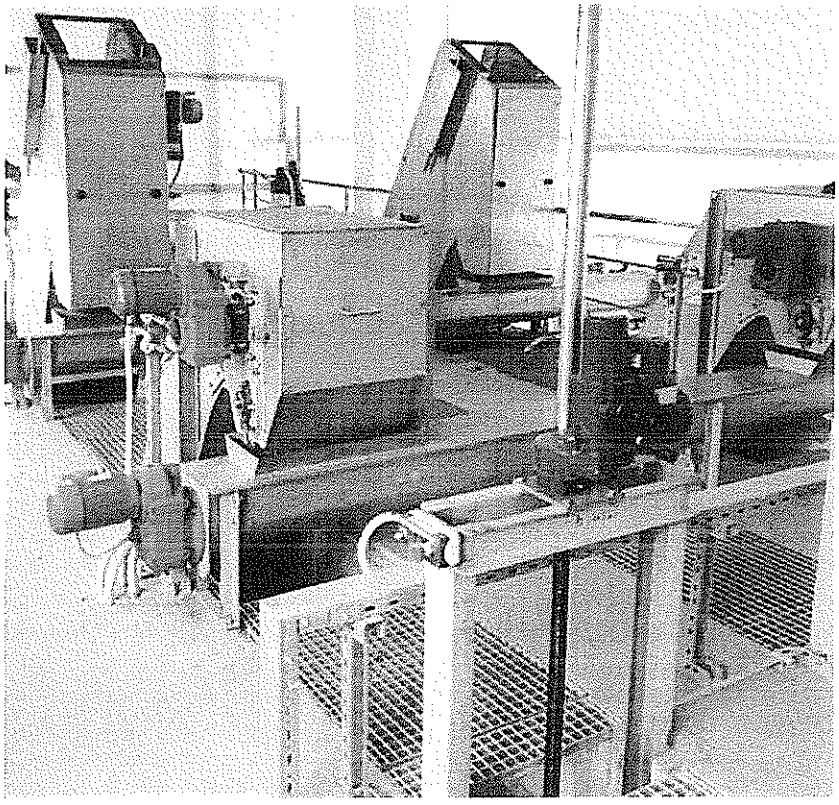

HEADQUARTERS:
Industrial Area of Larisa
Postal Code 41004, BOX 3053 Greece
www.karkanias.gr

Phone: +30 2410 541386
Fax: +30 2410 541354
Email: info@karkanias.gr

3/12/18

KARKANIAS
ENVIRONMENTAL TECHNOLOGY S.A.

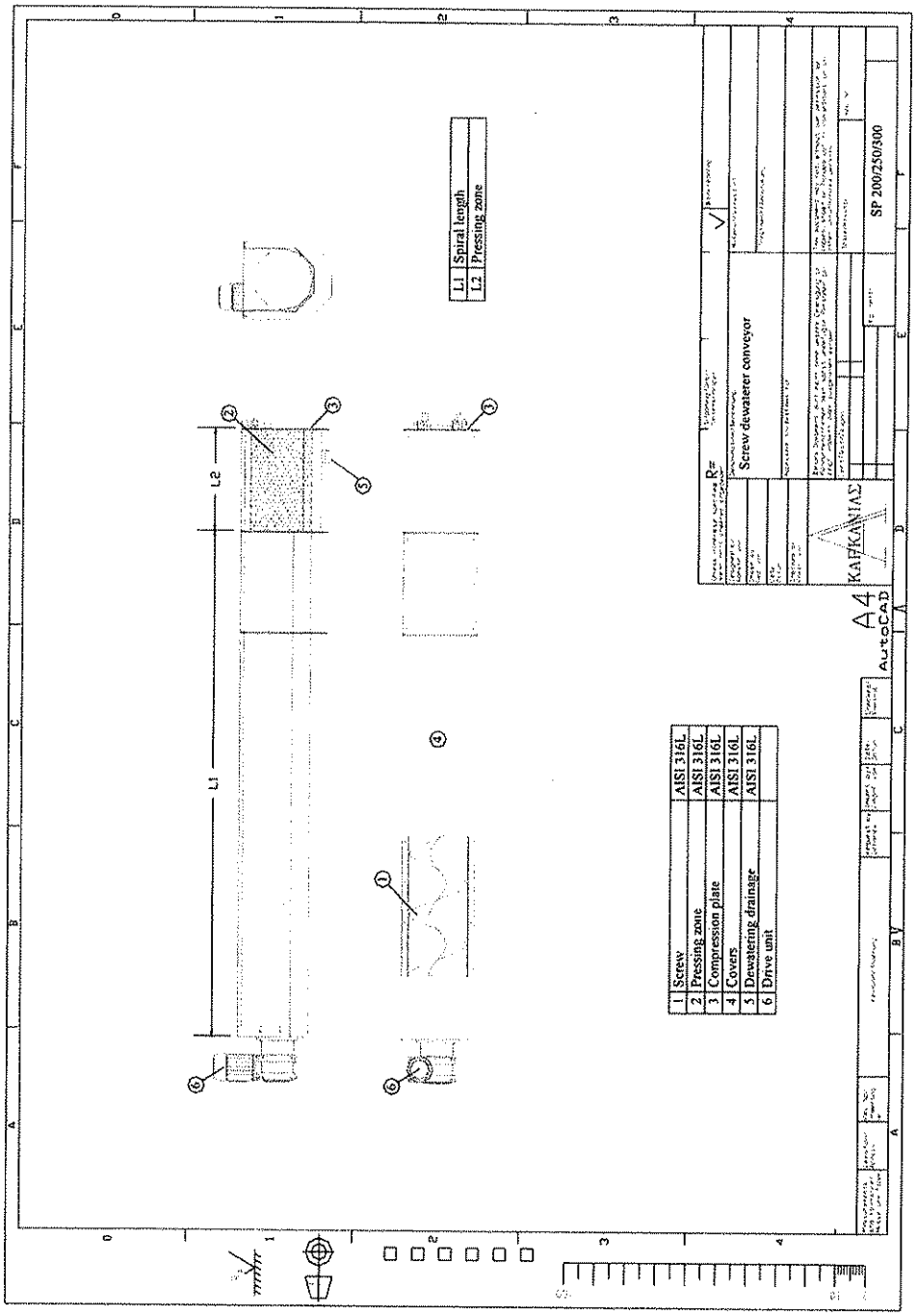

HEADQUARTERS:
Industrial Area of Larisa
Postal Code 41004, BOX 3053 Greece
www.karkanias.gr

Phone: +30 2410 541386
Fax: +30 2410 541354
Email: info@karkanias.gr

3/12/18
2

9. SERVICE WATER UNIT

3/12/18

PERFORMANCE CURVE
EVMSG15

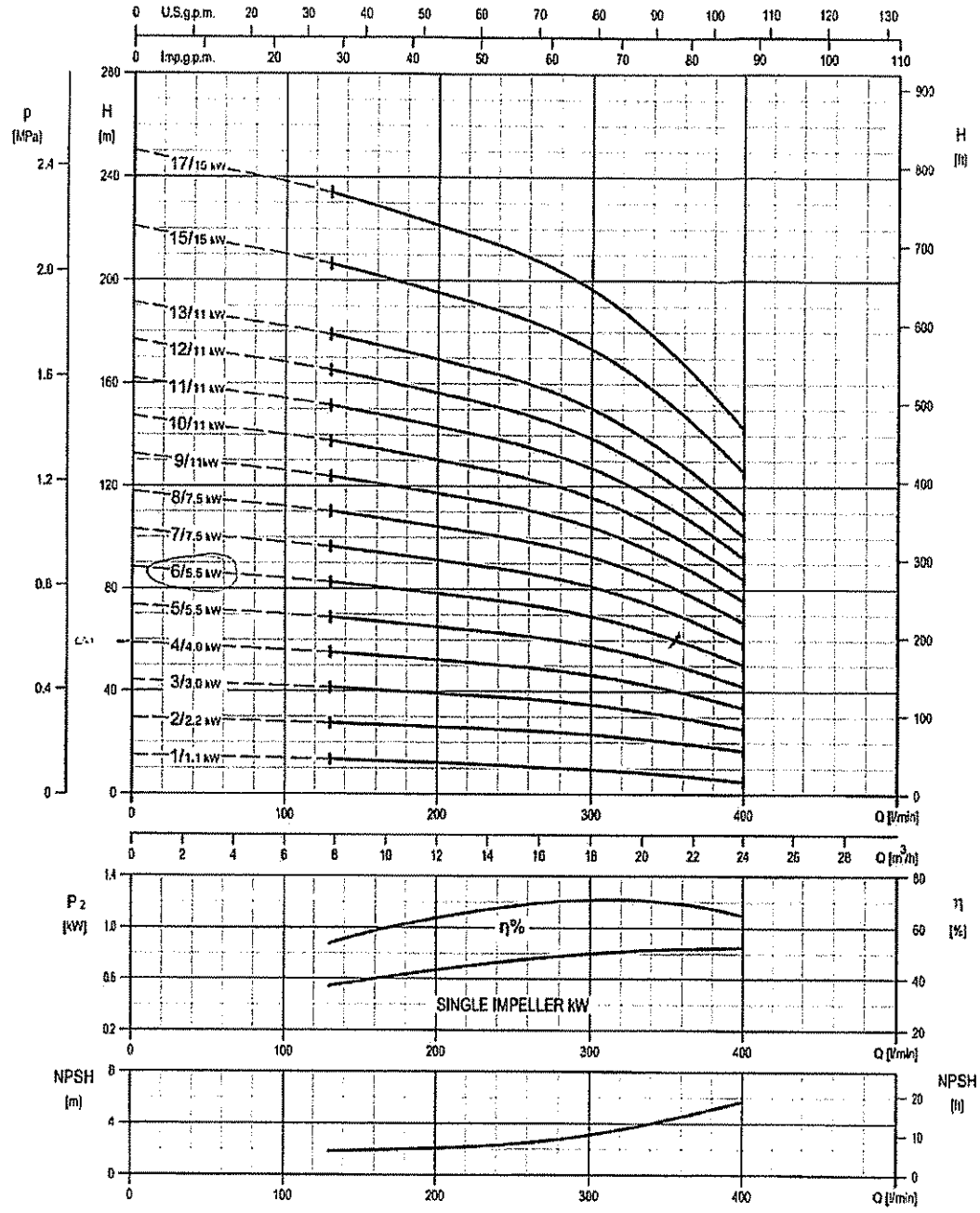

Rotation speed =2900 min^{-1}
Test standard: ISO 9906:2012 - Grade 3B

EBARA Pumps Europe

EBARA Pumps Europe S.p.A. reserves the right to make changes without prior notice.

3/12/18

10. TRANSFORMER STATION, POWER SWITCHBOARDS, BACKUP POWER SUPPLY

3/12/18

KAPELOS DIESELS

DATE	08/09/2017
OFFER Number	17.549

GENERATING SET	KAPELOS DIESELS SA 10 Efklidou street – 185 40 Piraeus - GREECE Tel.: 0030210 4178657/4179649	GREECE
ENGINE	JOHN DEERE Chemin de la Foulonnerie, BP 11013 Usine de Saran – Fleury Les Aubrais Cedex 45401 France	FRANCE
ALTERNATOR	MARELLI MOTORI spa Via Sabbionara, 1 36071 Arzignano (VI) Italy	ITALY

OFFER GEN SET 190 KVA PRIME POWER – 210 KVA STANDBY POWER

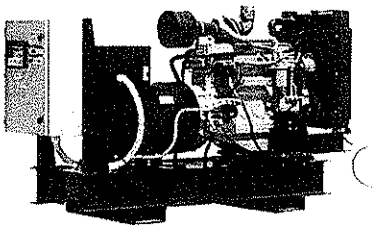

Industrial generating set with 210 KVA standby and 190 prime power output, operating at 1500 RPM, 50Hz, 231/400V, 0.8 P.F.

KAPELOS DIESELS S.A. has established and applies a quality system for design, manufacturing, sales and after sales support of generating sets and their control boards according to EN ISO 9001:2008

Engine

Diesel engine, made by JOHN DEERE in France, type CD6068HF258 manufactured to ISO3046 – BS5514 standards, four stroke, direct injection, operating with diesel fuel, heavy duty industrial type made specially for gen set application. Quality system operated by JOHN DEERE is in compliance with the standard ISO9001:2008

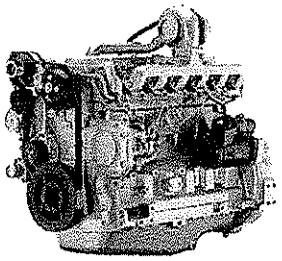

- ⇨ Number of cylinders 6 in line.
- ⇨ Turbocharged.
- ⇨ Displacement 6.800 Liters.
- ⇨ Piston diameter 106mm – Stroke of piston 127mm.
- ⇨ Prime power output, according to ISO3046, 223 HP (166KW) at 1500 RPM.
- ⇨ Stand By output, according to ISO3046, 245 HP (183KW) at 1500 RPM.
- ⇨ Radiator heavy duty, with pusher fan and heavy-duty cast iron coolant circulation pump, total coolant capacity 27 liter.
- ⇨ Forced lubrication with gear pump oil cooler.
- ⇨ Oil filter of replaceable type micron size 0.040mm, oil system capacity including filters 32 liter.
- ⇨ 12V electric system with electric starter and 55A battery charging alternator.
- ⇨ Dry air cleaner of replaceable type with indicator.
- ⇨ Engine air flow 10.7 m^3/min.
- ⇨ Fuel filter micron size 0,008mm.
- ⇨ Fuel consumption at : 25% of prime power 10.7 l/h – 50% of rated power 20 l/h – 75% of rated power 31 l/h – 100% of rated power 40 l/h.

Governor

Fuel injection pump STANADYNE, with solenoid fuel shut off valve mechanical governor, with 5% regulation.

Alternator

Alternator made in Italy by MARELLI, type MJB250MB4, manufactured to CEI 2-3, IEC34.1, VDE0530, BS4999 standards, single ball bearing B2 SAE3/11,5.

Quality system operated by MARELLI is in compliance with the standard ISO9001:2015

Self-regulating, self-exciting, four pole, tropicalized with special vacuum impregnation coating on windings, dynamically balanced rotor.

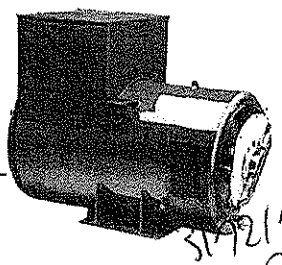

- ⇨ Enclosure IP23.
- ⇨ Axial type ventilation.
- ⇨ Insulation H Class.
- ⇨ Acceptable overload 10% for 1 hour, 15% for 10 min, 30% for 4 min, 50% for 2 min.
- ⇨ **Voltage regulation maintained within +/- 0,5% with electronic Automatic Voltage Regulator from no load to full load.**

- ⇨ Manually the voltage can be regulated to +/-5%.
- ⇨ Efficiency at: 4/4 of load 93%.
- ⇨ Continuous output 185 KVA, standby output 205 KVA, according to H Class, at 400V, 1500 RPM, 50HZ, cosf 0,8.
- ⇨ **The line voltage waveform with the machine unloaded and supplying non deforming three phase load with a residual harmonic in the order of less than 2%.**
- ⇨ Voltage drop due to the application of full load at 0.8 power factor lagging is between 18 to 20% the output voltage recovers to within +/-3% of the steady value in less than 0.5s.
- ⇨ **Protection with MCCB**

Base
The alternator is directly coupled to the engine with multiple steel discs and mounted on the base frame through flexible mountings. Steel base frame with internal 220 liter fuel tank, with fuel level indication.

Battery.
1 unit of 12V –100Ah NO MAINTANANCE is included.

Silencer
In open version a silencer is supplied loose, there is on the engine a 500 mm galvanized steel flexible exhaust pipe.
The exhaust gas silencer, residential type, is internal mounted in silencer canopy

Automatic Control Panel for Standby use

Control panel is made from metal sheet, epoxy painted with front door for easy inspection and repair.
Automatic Mains Failure Controller

The D500L is next generation genset control units combining multi-functionality and wide communication possibilities together with a reliable and low cost design.

The unit complies and mostly exceeds world's tightest safety, EMC, vibration and environmental standards for the industrial category.

Software features are complete with easy firmware upgrade process through USB port.

The Windows based PC software allows monitoring and programming through USB, serial and GPRS.

The PC based Rainbow Scada software allows monitoring and control of an unlimited number of gensets from a single central location.

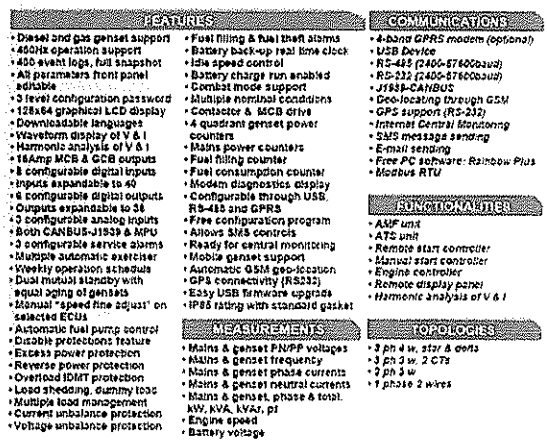

- ❖ Electronic fully programmable electronic controller with processor controlling all functions of the gen set.
- ❖ Manual and automatic mains failure control.
- ❖ Display of V-Hz-A mains or generator.
- ❖ Display of hours run counter.
- ❖ Manual control of the contactors & Led indicators
- ❖ Submenu displays 400 events providing Date & Time information for: Warnings, Shutdowns, switching of the Contactors and changing of the mode of operation.
- ❖ Allows 4-chatacter password protection
- ❖ Complete ser of operating and alarm messages
- ❖ Relay output for mains/generator contactor.
- ❖ Various timer and level settings.
- ❖ Periodic start/stop for test safety purpose.
- ❖ Interface RS-485 RTU protocol
- ❖ Automatic Mains Failure scheduler.

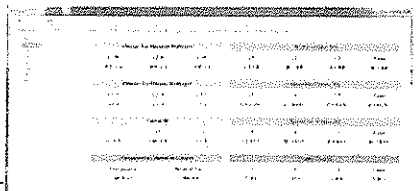

You can set the day / time to limit the control of the Mains. The engine will start only in the allowed window of time between ON and OFF.

- ❖ Electronic protection against overload and shortcircuit.
- ❖ Full engine protection with automatic shut down in case of Low Oil pressure or High Coolant temperature, Overspeed, Low Speed, Overload, Low alternator voltage, low fuel in the tank.
- ❖ Indication for high coolant temperature – low oil pressure – low battery charging.
- ❖ Ammeters of transformer type.
- ❖ Voltage meter.
- ❖ Frequency meter.
- ❖ Hour meter.
- ❖ KW,KVA, KVAr, cosφ, KWh meter

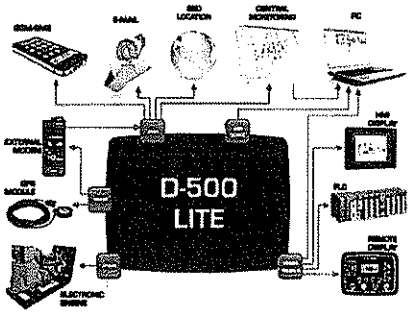

COMMUNICATIONS:

- ✓ • 4-band GPRS modem (optional)
- ✓ • USB Device
- ✓ • RS-485 (2400-57600baud)
- ✓ • RS-232 (2400-57600baud)
- ✓ • J1939-CANBUS
- ✓ • Geo-locating through GSM
- ✓ • GPS support (RS-232)
- ✓ • Internet Central Monitoring
- ✓ • SMS message sending
- ✓ • E-mail sending
- ✓ • Free PC software: Rainbow Plus
- ✓ • Modbus RTU

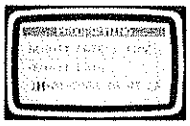

These parameters allow adjusting the battery backup real time clock of the module. Once set, the clock will continue to run even if DC power is removed from the unit.

Parameter Definition	Unit	Min	Max	Description
Date	-	01	31	Current day of the month
Month	-	01	12	Current month
Year	-	00	99	Last two digits of the current year
Hours	-	00	23	Current hour of the day
Minutes	-	00	59	Current minute of the hour
Seconds	-	00	59	Current second of the minute

REAL TIME MONITORING

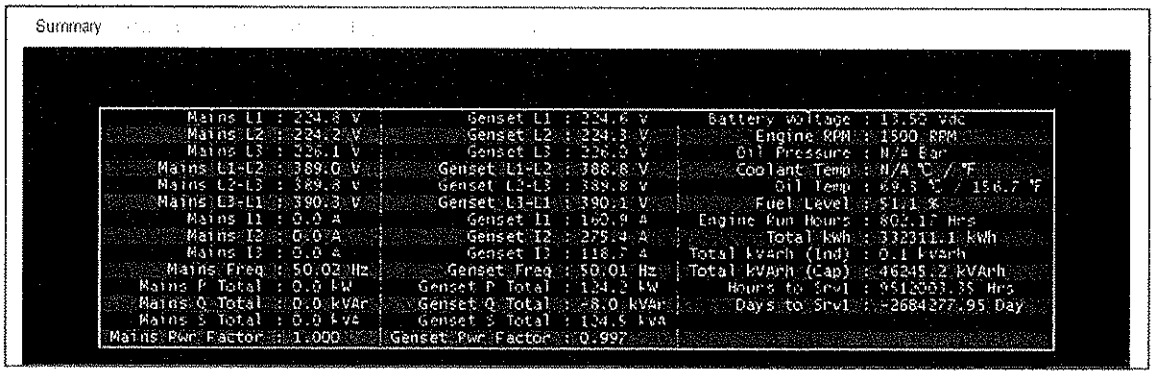

Battery charger

- ❖ Automatic battery charger from mains.
  Boost current 4 A / 6 A.
  Voltage input 170 V - 247V AC, 50HZ / 60HZ.
  Trickle charge curent 250mA.
  Temperature range -20°C to+70°C.

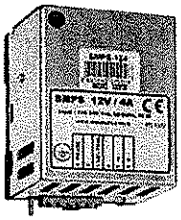

- ❖ Manual by pass control of the power output relays and the control of the gen set.

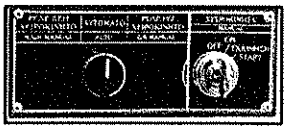

CANOPY

The canopy is designed and built to provide a perfect cooling for the engine, even for tropical ambient application. Noise level 67 dBA ±3

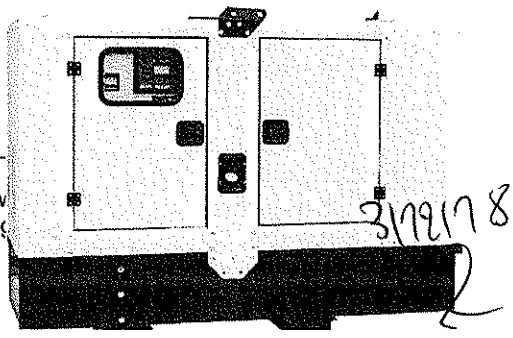

10 Efklidou street – 185 40 Piraeus - GREECE
Tel.: 0030210 4178657/4179649 • Fax: 0030210 4137431 • v
E-mails: info@kapelos.gr • spareparts@kapelos.

3/12/18

at 7 m. The exhaust gas silencer, residential type, is internal mounted. The sound proofing materials are highly fire-proof.
The door locks are stainless made with key. The galvanized steel is then painted by applying a thick polyester powder coat to provide an excellent resistant surface for humid and corrosive ambient.

Physical data with silent canopy
Weight: 2600 Kgr
Dimensions: Length 3200mm x Width 1100mm x Height 2040mm

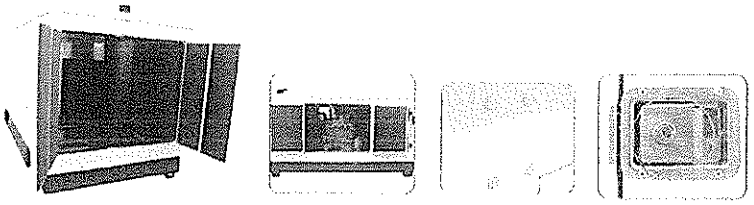

Low speed Trailer description (OPTIONAL)
The complete gen set is equipped with trailer, including mechanical disk brake with auto-reverse. Directional stability and low maintenance coil spring.

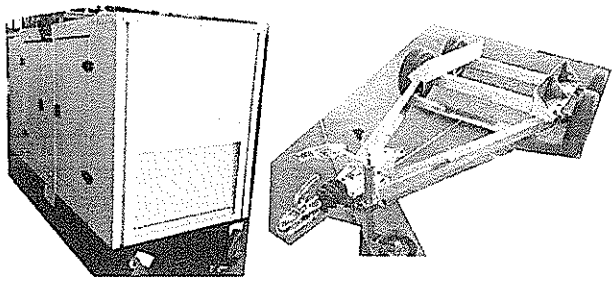

Manuals
Gen set is equipped with the following manuals in English.
- Operational manual for the automatic controller.
- Owner's manual for engine.
- Owner's manual for alternator.
- Circuit diagram.

Warranty
2 years for the diesel engine and for the rest parts. Warranty policy according to the warranty policy of each supplier.

10 Efklidou street – 185 40 Piraeus - GREECE
Tel.: 0030210 4178657/4179649 • Fax: 0030210 4137431 • www.kapelos.gr
E-mails: info@kapelos.gr • spareparts@kapelos.gr

3/12/18

3/12/18

11. AUTOMATION SYSTEM & SCADA

3/12/18

SIEMENS

Data sheet 6ES7515-2AM01-0AB0

SIMATIC S7-1500, CPU 1515-2 PN, Central processing unit with work memory 500 KB for Program and 3 MB for data, 1st interface: PROFINET IRT with 2-port switch, 2nd interface: PROFINET RT, 30 ns bit performance, SIMATIC Memory Card required

General information	
Product type designation	CPU 1515-2 PN
HW functional status	FS03
Firmware version	V2.5
Engineering with	
• STEP 7 TIA Portal configurable/integrated as of version	V15 (FW V2.5) / V13 SP1 Update 4 (FW V1.8) or higher
Configuration data(re)	
via dataset	Yes
Display	
Screen diagonal [cm]	6.1 cm
Control elements	
Number of keys	6
Mode selector switch	1
Supply voltage	
Type of supply voltage	24 V DC
permissible range, lower limit (DC)	19.2 V

Subject to change without notice
© Copyright Siemens

3/12/18

permissible range, upper limit (DC)	28.8 V
Reverse polarity protection	Yes
Mains buffering	
◦ Mains/voltage failure stored energy time	5 ms
◦ Repeat rate, min.	1/s

Inrush current	
Current consumption (rated value)	0.8 A
Inrush current, max.	2.4 A; Rated value
I^2t	0.02 $A^2 \cdot s$

Power	
Infeed power to the backplane bus	12 W
Power consumption from the backplane bus (balanced)	6.2 W

Power loss	
Power loss, typ.	6.3 W

Memory	
Number of slots for SIMATIC memory card	1
SIMATIC memory card required	Yes
Work memory	
◦ integrated (for program)	500 kbyte
◦ integrated (for data)	3 Mbyte
Load memory	
◦ Plug-in (SIMATIC Memory Card), max.	32 Gbyte
Backup	
◦ maintenance-free	Yes

CPU processing times	
for bit operations, typ.	30 ns
for word operations, typ.	36 ns
for fixed point arithmetic, typ.	48 ns
for floating point arithmetic, typ.	192 ns

CPU-blocks	
Number of elements (total)	6 000; Blocks (OB, FB, FC, DB) and UDTs
DB	
◦ Number range	1 ... 60 999; subdivided into: number range that can be used by the user: 1 ... 59 999, and number range of DBs created via SFC 86: 60 000 ... 60 999
◦ Size, max.	3 Mbyte; For non-optimized block accesses, the max. size of the DB is 64 KB
FB	
◦ Number range	0 ... 65 535
◦ Size, max.	500 kbyte

Subject to change without notice
© Copyright Siemens

3/12/18

FC	
• Number range	0 ... 65 535
• Size, max.	500 kbyte
OB	
• Size, max.	500 kbyte
• Number of free cycle OBs	100
• Number of time alarm OBs	20
• Number of delay alarm OBs	20
• Number of cyclic interrupt OBs	20; With minimum OB 3x cycle of 500 µs
• Number of process alarm OBs	50
• Number of DPV1 alarm OBs	3
• Number of isochronous mode OBs	1
• Number of technology synchronous alarm OBs	2
• Number of startup OBs	100
• Number of asynchronous error OBs	4
• Number of synchronous error OBs	2
• Number of diagnostic alarm OBs	1
Nesting depth	
• per priority class	24

Counters, timers and their retentivity	
S7 counter	
• Number	2 048
Retentivity	
— adjustable	Yes
IEC counter	
• Number	Any (only limited by the main memory)
Retentivity	
— adjustable	Yes
S7 times	
• Number	2 048
Retentivity	
— adjustable	Yes
IEC timer	
• Number	Any (only limited by the main memory)
Retentivity	
— adjustable	Yes

Data areas and their retentivity	
Retentive data area (incl. timers, counters, flags), max.	512 kbyte; In total; available retentive memory for bit memories, timers, counters, DBs, and technology data (axes): 472 KB
Extended retentive data area (incl. timers, counters, flags), max.	3 Mbyte; When using PS 60W 24/48/60V DC HF

Subject to change without notice
© Copyright Siemens

Flag	
◦ Number, max.	16 kbyte
◦ Number of clock memories	8; 8 clock memory bit, grouped into one clock memory byte
Data blocks	
◦ Retentivity adjustable	Yes
◦ Retentivity preset	No
Local data	
◦ per priority class, max.	64 kbyte; max. 16 KB per block

Address area	
Number of IO modules	8 192; max. number of modules / submodules
I/O address area	
◦ Inputs	32 kbyte; All inputs are in the process image
◦ Outputs	32 kbyte; All outputs are in the process image
per integrated IO subsystem	
— Inputs (volume)	8 kbyte
— Outputs (volume)	8 kbyte
per CM/CP	
— Inputs (volume)	8 kbyte
— Outputs (volume)	8 kbyte
Subprocess images	
◦ Number of subprocess images, max.	32

Hardware configuration	
Number of distributed IO systems	64; A distributed I/O system is characterized not only by the integration of distributed I/O via PROFINET or PROFIBUS communication modules, but also by the connection of I/O via AS-i master modules or links (e.g. IE/PB-Link)
Number of DP masters	
◦ Via CM	8; A maximum of 8 CMs/CPs (PROFIBUS, PROFINET, Ethernet) can be inserted in total
Number of IO Controllers	
◦ integrated	2
◦ Via CM	8; A maximum of 8 CMs/CPs (PROFIBUS, PROFINET, Ethernet) can be inserted in total
Rack	
◦ Modules per rack, max.	32; CPU + 31 modules
◦ Number of lines, max.	1
PtP CM	
◦ Number of PtP CMs	the number of connectable PtP CMs is only limited by the number of available slots

Time of day	
Clock	
◦ Type	Hardware clock

Subject to change without notice
© Copyright Siemens
3/12/18

• Backup time	6 wk; At 40 °C ambient temperature, typically
• Deviation per day, max.	10 s; Typ.: 2 s
Operating hours counter	
• Number	16
Clock synchronization	
• supported	Yes
• in AS, master	Yes
• in AS, slave	Yes
• on Ethernet via NTP	Yes
Interfaces	
Number of PROFINET interfaces	2
1. Interface	
Interface types	
• Number of ports	2
• integrated switch	Yes
• RJ 45 (Ethernet)	Yes; X1
Protocols	
• IP protocol	Yes; IPv4
• PROFINET IO Controller	Yes
• PROFINET IO Device	Yes
• SIMATIC communication	Yes
• Open IE communication	Yes
• Web server	Yes
• Media redundancy	Yes; MRP Automanager according to IEC 62439-2 Edition 2.0
PROFINET IO Controller	
Services	
— PG/OP communication	Yes
— S7 routing	Yes
— Isochronous mode	Yes
— Open IE communication	Yes
— IRT	Yes
— MRP	Yes; As MRP redundancy manager and/or MRP client; max. number of devices in the ring: 50
— MRPD	Yes; Requirement: IRT
— PROFIenergy	Yes
— Prioritized startup	Yes; Max. 32 PROFINET devices
— Number of connectable IO Devices, max.	256; In total, up to 1 000 distributed I/O devices can be connected via AS-i, PROFIBUS or PROFINET
— Of which IO devices with IRT, max.	64
— Number of connectable IO Devices for RT, max.	256

Subject to change without notice
© Copyright Siemens
3/12/18

— of which in line, max.	256
— Number of IO Devices that can be simultaneously activated/deactivated, max.	8; in total across all interfaces
— Number of IO Devices per tool, max.	8
— Updating times	The minimum value of the update time also depends on communication share set for PROFINET IO, on the number of IO devices, and on the quantity of configured user data
Update time for IRT	
— for send cycle of 250 µs	250 µs to 4 ms; Note: In the case of IRT with isochronous mode, the minimum update time of 500 µs of the isochronous OB is decisive
— for send cycle of 500 µs	500 µs to 8 ms
— for send cycle of 1 ms	1 ms to 16 ms
— for send cycle of 2 ms	2 ms to 32 ms
— for send cycle of 4 ms	4 ms to 64 ms
— With IRT and parameterization of "odd" send cycles	Update time = set "odd" send clock (any multiple of 125 µs: 375 µs, 625 µs ... 3 875 µs)
Update time for RT	
— for send cycle of 250 µs	250 µs to 128 ms
— for send cycle of 500 µs	500 µs to 256 ms
— for send cycle of 1 ms	1 ms to 512 ms
— for send cycle of 2 ms	2 ms to 512 ms
— for send cycle of 4 ms	4 ms to 512 ms
PROFINET IO Device	
Services	
— PG/OP communication	Yes
— S7 routing	Yes
— Isochronous mode	No
— Open IE communication	Yes
— IRT	Yes
— MRP	Yes
— MRPD	Yes; Requirement: IRT
— PROFIenergy	Yes
— Shared device	Yes
— Number of IO Controllers with shared device, max.	4
— Asset management record	Yes; Per user program
X1 [illegible]	
Interface types	
◦ Number of ports	1
◦ integrated switch	No
◦ RJ 45 (Ethernet)	Yes; X2

Subject to change without notice
© Copyright Siemens

3/12/18

Protocols	
• IP protocol	Yes; IPv4
• PROFINET IO Controller	Yes
• PROFINET IO Device	Yes
• SIMATIC communication	Yes
• Open IE communication	Yes
• Web server	Yes
• Media redundancy	No
PROFINET IO Controller	
Services	
— PG/OP communication	Yes
— S7 routing	Yes
— Isochronous mode	No
— Open IE communication	Yes
— IRT	No
— MRP	No
— MRPD	No
— PROFIenergy	Yes
— Prioritized startup	No
— Number of connectable IO Devices, max.	32; In total, up to 1 000 distributed I/O devices can be connected via AS-i, PROFIBUS or PROFINET
— Number of connectable IO Devices for RT, max.	32
— of which in line, max.	32
— Number of IO Devices that can be simultaneously activated/deactivated, max.	8; in total across all interfaces
— Number of IO Devices per tool, max.	8
— Updating times	The minimum value of the update time also depends on communication share set for PROFINET IO, on the number of IO devices, and on the quantity of configured user data
Update time for RT	
— for send cycle of 1 ms	1 ms to 512 ms
PROFINET IO Device	
Services	
— PG/OP communication	Yes
— S7 routing	Yes
— Isochronous mode	No
— Open IE communication	Yes
— IRT	No
— MRP	No
— MRPD	No
— PROFIenergy	Yes

Subject to change without notice
© Copyright Siemens

3/12/18

— Prioritized startup	No
— Shared device	Yes
— Number of IO Controllers with shared device, max.	4
— Asset management record	Yes; Per user program

Interface types	
RJ 45 (Ethernet)	
◦ 100 Mbps	Yes
◦ Autonegotiation	Yes
◦ Autocrossing	Yes
◦ Industrial Ethernet status LED	Yes

Protocols	
Number of connections	
◦ Number of connections, max.	192; via integrated interfaces of the CPU and connected CPs / CMs
◦ Number of connections reserved for ES/HMI/web	10
◦ Number of connections via integrated interfaces	108
◦ Number of S7 routing paths	16
SIMATIC communication	
◦ S7 communication, as server	Yes
◦ S7 communication, as client	Yes
◦ User data per job, max.	See online help (S7 communication, user data size)
Open IE communication	
◦ TCP/IP	Yes
— Data length, max.	64 kbyte
— several passive connections per port, supported	Yes
◦ ISO-on-TCP (RFC1006)	Yes
— Data length, max.	64 kbyte
◦ UDP	Yes
— Data length, max.	2 kbyte; 1 472 bytes for UDP broadcast
— UDP multicast	Yes; Max. 5 multicast circuits
◦ DHCP	No
◦ SNMP	Yes
◦ DCP	Yes
◦ LLDP	Yes
Web server	
◦ HTTP	Yes; Standard and user pages
◦ HTTPS	Yes; Standard and user pages
OPC UA	

Subject to change without notice
© Copyright Siemens
3/12/18

• Runtime license required	Yes
• OPC UA server	Yes; Data access (read, write, subscribe), method call, custom address space
— Application authentication	Yes
— Security policies	Available security policies: None, Basic128Rsa15, Basic256Rsa15, Basic256Sha256
— User authentication	"anonymous" or by user name & password
— Number of sessions, max.	48
— Number of accessible variables, max.	100 000
— Number of registerable nodes, max.	20 000
— Number of subscriptions per session, max.	20
— Sampling time, min.	100 ms
— Send time, min.	200 ms
— Number of server methods, max.	50
— Number of inputs/outputs per server method, max.	20
— Number of monitored items, max.	2 000; For 1 s sampling interval and 1 s send interval
— Number of server interfaces, max.	10
— Number of nodes for user-defined server interfaces, max.	5 000
Further protocols	
• MODBUS	Yes; MODBUS TCP
Media redundancy	
• Switchover time on line break, typ.	200 ms; For MRP, bumpless for MRPD
• Number of stations in the ring, max.	50
Isochronous mode	
Isochronous operation (application synchronized up to terminal)	Yes; With minimum OB 6x cycle of 500 µs
Equidistance	Yes
S7 message functions	
Number of login stations for message functions, max.	32
Program alarms	Yes
Number of configurable program messages, max.	10 000; Program messages are generated by the "Program_Alarm" block, ProDiag or GRAPH
Number of loadable program messages in RUN, max.	5 000
Number of simultaneously active program alarms	
• Number of program alarms	600
• Number of alarms for system diagnostics	200
• Number of alarms for motion technology objects	160
Test commissioning functions	

Subject to change without notice
© Copyright Siemens
3/12/18

Joint commission (Team Engineering)	Yes; Parallel online access possible for up to 8 engineering systems
Status block	Yes; Up to 8 simultaneously (in total across all ES clients)
Single step	No
Number of breakpoints	8
Status/control	
◦ Status/control variable	Yes
◦ Variables	Inputs/outputs, memory bits, DBs, distributed I/Os, timers, counters
◦ Number of variables, max.	
— of which status variables, max.	200; per job
— of which control variables, max.	200; per job
Forcing	
◦ Forcing, variables	Peripheral inputs/outputs
◦ Number of variables, max.	200
Diagnostic buffer	
◦ present	Yes
◦ Number of entries, max.	3 200
— of which powerfail-proof	500
Traces	
◦ Number of configurable Traces	4; Up to 512 KB of data per trace are possible

Interrupts/diagnostics/status information

Diagnostics indication LED	
◦ RUN/STOP LED	Yes
◦ ERROR LED	Yes
◦ MAINT LED	Yes
◦ Connection display LINK TX/RX	Yes

Supported technology objects

Motion Control	Yes; Note: The number of axes affects the cycle time of the PLC program; selection guide via the TIA Selection Tool or SIZER
◦ Number of available Motion Control resources for technology objects (except cam disks)	2 400
◦ Required Motion Control resources	
— per speed-controlled axis	40
— per positioning axis	80
— per synchronous axis	160
— per external encoder	80
— per output cam	20
— per cam track	160
— per probe	40
◦ Positioning axis	

Subject to change without notice
© Copyright Siemens
3/12/18

— Number of positioning axes at motion control cycle of 4 ms (typical value)	7
— Number of positioning axes at motion control cycle of 8 ms (typical value)	14
Controller	
• PID_Compact	Yes; Universal PID controller with integrated optimization
• PID_3Step	Yes; PID controller with integrated optimization for valves
• PID-Temp	Yes; PID controller with integrated optimization for temperature
Counting and measuring	
• High-speed counter	Yes

Ambient conditions

Ambient temperature during operation	
• horizontal installation, min.	0 °C
• horizontal installation, max.	60 °C; Display: 50 °C, at an operating temperature of typically 50 °C, the display is switched off
• vertical installation, min.	0 °C
• vertical installation, max.	40 °C; Display: 40 °C, at an operating temperature of typically 40 °C, the display is switched off
Ambient temperature during storage/transportation	
• min.	-40 °C
• max.	70 °C

Configuration

Programming	
Programming language	
— LAD	Yes
— FBD	Yes
— STL	Yes
— SCL	Yes
— GRAPH	Yes
Know-how protection	
• User program protection/password protection	Yes
• Copy protection	Yes
• Block protection	Yes
Access protection	
• Password for display	Yes
• Protection level: Write protection	Yes
• Protection level: Read/write protection	Yes
• Protection level: Complete protection	Yes
Cycle time monitoring	
• lower limit	adjustable minimum cycle time
• upper limit	adjustable maximum cycle time

Subject to change without notice
© Copyright Siemens

3/12/18

Dimensions	
Width	70 mm
Height	147 mm
Depth	129 mm

Weights	
Weight, approx.	830 g

last modified: 09/07/2018

Subject to change without notice
© Copyright Siemens

3/12/18

SIEMENS

Data sheet 6AV2124-0MC01-0AX0

SIMATIC HMI TP1200 Comfort, Comfort Panel, Touch operation, 12" Widescreen TFT display, 16 million colors, PROFINET interface, MPI/PROFIBUS DP interface, 12 MB configuration memory, Windows CE 6.0, configurable from WinCC Comfort V11

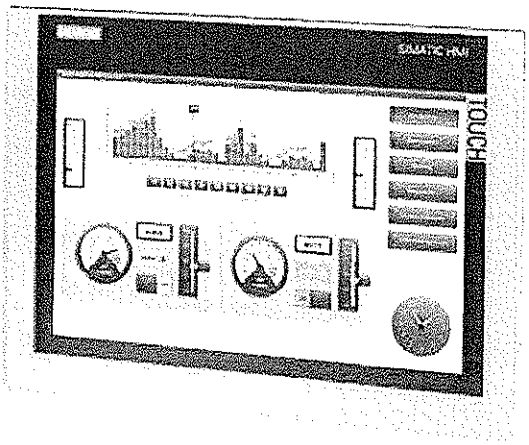

General information	
Product type designation	TP1200 Comfort
Display	
Design of display	TFT
Screen diagonal	12.1 in
Display width	261.1 mm
Display height	163.2 mm
Number of colors	16 777 216
Resolution (pixels)	
• Horizontal image resolution	1 280 Pixel
• Vertical image resolution	800 Pixel
Backlighting	
• MTBF backlighting (at 25 °C)	80 000 h
• Backlight dimmable	Yes; 0-100 %
Control elements	
Keyboard fonts	
• Function keys	
— Number of function keys	0

Subject to change without notice
© Copyright Siemens

3/12/18

◦ Keys with LED	No
◦ System keys	No
◦ Numeric keyboard	Yes; Onscreen keyboard
◦ alphanumeric keyboard	Yes; Onscreen keyboard
Touch operation	
◦ Design as touch screen	Yes
Expansions for operator control of the process	
◦ DP direct LEDs (LEDs as S7 output I/O)	
— F1...Fx	0
◦ Direct keys (keys as S7 input I/O)	
— F1...Fx	0
◦ Direct keys (touch buttons as S7 input I/O)	40

Installation specifications	
Mounting position	vertical
Mounting in portrait format possible	Yes
Mounting in landscape format possible	Yes
maximum permissible angle of inclination without external ventilation	35°

Supply voltage	
Type of supply voltage	DC
Rated value (DC)	24 V
permissible range, lower limit (DC)	19.2 V
permissible range, upper limit (DC)	28.8 V

Input current	
Current consumption (rated value)	0.85 A
Starting current inrush I^2t	0.5 $A^2 \cdot s$

Power	
Active power input, typ.	20 W

Processor	
Processor type	X86

Memory	
Flash	Yes
RAM	Yes
Memory available for user data	12 Mbyte

Indicators	
Info LED	No
Power LED	No
Error LED	No
Acoustics	
◦ Buzzer	No

Subject to change without notice
© Copyright Siemens
3/12/18

• Speaker	Yes
Time of day	
Clock	
• Hardware clock (real-time)	Yes
• Software clock	Yes
• retentive	Yes; Back-up duration typically 6 weeks
• synchronizable	Yes
Interfaces	
Number of industrial Ethernet interfaces	1; 2 ports (switch)
Number of RS 485 interfaces	1; RS 422 / 485 combined
Number of RS 422 interfaces	0; together with RS 485
Number of RS 232 interfaces	0
Number of USB interfaces	2; USB 2.0
• USB Mini B	1; 5-pole
Number of 20 mA interfaces (TTY)	0
Number of parallel interfaces	0
Number of other interfaces	0
Number of SD card slots	2
With software interfaces	No
Industrial Ethernet	
• Industrial Ethernet status LED	2
• Number of ports of the integrated switch	2
Protocols	
PROFINET	Yes
Supports protocol for PROFINET IO	Yes
IRT	Yes; As of WinCC V12
MRP	Yes; As of WinCC V12
PROFIBUS	Yes
MPI	Yes
Protocols (Ethernet)	
• TCP/IP	Yes
• DHCP	Yes
• SNMP	Yes
• DCP	Yes
• LLDP	Yes
WEB characteristics	
• HTTP	Yes
• HTTPS	Yes
• HTML	Yes
• XML	Yes
• CSS	Yes

Subject to change without notice
© Copyright Siemens
3/12/18

◦ Active X	Yes
◦ JavaScript	Yes
◦ Java VM	No
Further protocols	
◦ CAN	No
◦ EtherNet/IP	Yes
◦ MODBUS	Yes

EMC	
Emission of radio interference acc. to EN 55 011	
◦ Limit class A, for use in industrial areas	Yes
◦ Limit class B, for use in residential areas	No

Degree and class of protection	
IP (at the front)	IP65
Enclosure Type 4 at the front	Yes
Enclosure Type 4x at the front	Yes
IP (rear)	IP20

Standards, approvals, certificates	
CE mark	Yes
cULus	Yes
RCM (formerly C-TICK)	Yes
KC approval	Yes
Use in hazardous areas	
◦ ATEX Zone 2	Yes
◦ ATEX Zone 22	Yes
◦ IECEx Zone 2	Yes
◦ IECEx Zone 22	Yes
◦ cULus Class I Zone 1	No
◦ cULus Class I Zone 2, Division 2	Yes
◦ FM Class I Division 2	Yes
Marine approval	
◦ Germanischer Lloyd (GL)	Yes; As of product version: 10
◦ American Bureau of Shipping (ABS)	Yes; As of product version: 10
◦ Bureau Veritas (BV)	Yes; As of product version: 10
◦ Det Norske Veritas (DNV)	Yes; As of product version: 10
◦ Lloyds Register of Shipping (LRS)	Yes; As of product version: 10
◦ Nippon Kaiji Kyokai (Class NK)	Yes; As of product version: 10
◦ Polski Rejestr Statkow (PRS)	No

Ambient conditions	
Ambient temperature during operation	
◦ Operation (vertical installation)	

Subject to change without notice
© Copyright Siemens
3/12/18

— For vertical installation, min.	0 °C
— For vertical installation, max.	50 °C; (55 °C, see entry ID: 64847814)
• Operation (max. tilt angle)	
— At maximum tilt angle, min.	0 °C
— At maximum tilt angle, min.	40 °C
• Operation (vertical installation, portrait format)	
— For vertical installation, min.	0 °C
— For vertical installation, max.	40 °C
• Operation (max. tilt angle, portrait format)	
— At maximum tilt angle, min.	0 °C
— At maximum tilt angle, min.	35 °C
Ambient temperature during storage/transportation	
• min.	-20 °C
• max.	60 °C
Relative humidity	
• Operation, max.	90 %; no condensation

Operating systems	
proprietary	No
pre-installed operating system	
• Windows CE	Yes

Configuration	
Message indicator	Yes
Alarm system (incl. buffer and acknowledgment)	Yes
Process value display (output)	Yes
Process value default (input) possible	Yes
Recipe management	Yes
Configuration software	
• STEP 7 Basic (TIA Portal)	No
• STEP 7 Professional (TIA Portal)	No
• WinCC flexible Compact	No
• WinCC flexible Standard	No
• WinCC flexible Advanced	No
• WinCC Basic (TIA Portal)	No
• WinCC Comfort (TIA Portal)	Yes; from V11
• WinCC Advanced (TIA Portal)	Yes; from V11
• WinCC Professional (TIA Portal)	Yes; from V11

Languages	
Online languages	
• Number of online/runtime languages	32
Project languages	
• Languages per project	32

Subject to change without notice
© Copyright Siemens

Functionality of the WinCC (TIA Portal)	
Libraries	Yes
Applications/options	
◦ Web browser	Yes
◦ Pocket Word	Yes
◦ Pocket Excel	Yes
◦ PDF Viewer	Yes
◦ Media Player	Yes
◦ SIMATIC WinCC Sm@rtServer	Yes
◦ SIMATIC WinCC Audit	Yes
Number of Visual Basic Scripts	Yes
Task planner	
◦ time-controlled	Yes
◦ task-controlled	Yes
Help system	
◦ Number of characters per info text	70
Message system	
◦ Number of alarm classes	32
◦ Bit messages	
— Number of bit messages	4 000
◦ Analog messages	
— Number of analog messages	200
◦ S7 alarm number procedure	Yes
◦ System messages HMI	Yes
◦ System messages, other (SIMATIC S7, Sinumerik, Simotion, etc.)	Yes
◦ Number of characters per message	80
◦ Number of process values per message	8
◦ Acknowledgment groups	Yes
◦ Message indicator	Yes
◦ Message buffer	
— Number of entries	1 024
— Circulating buffer	Yes
— retentive	Yes
— maintenance-free	Yes
Recipe management	
◦ Number of recipes	300
◦ Data records per recipe	500
◦ Entries per data record	1 000
◦ Size of internal recipe memory	2 Mbyte
◦ Recipe memory expandable	Yes

Subject to change without notice
© Copyright Siemens
3/12/18

Variables	
• Number of variables per device	2 048
• Number of variables per screen	400
• Limit values	Yes
• Multiplexing	Yes
• Structures	Yes
• Arrays	Yes
Images	
• Number of configurable images	500
• Permanent window/default	Yes
• Global image	Yes
• Pop-up images	Yes
• Slide-in images	Yes
• Image selection by PLC	Yes
• Image number in the PLC	Yes
Image objects	
• Number of objects per image	400
• Text fields	Yes
• I/O fields	Yes
• Graphic I/O fields (graphics list)	Yes
• Symbolic I/O fields (text list)	Yes
• Date/time fields	Yes
• Switches	Yes
• Buttons	Yes
• Graphic display	Yes
• Icons	Yes
• Geometric objects	Yes
Complex image objects	
• Number of complex objects per screen	20
• Alarm view	Yes
• Trend view	Yes
• User view	Yes
• Status/control	Yes
• Sm@rtClient view	Yes
• Recipe view	Yes
• f(x) trend view	Yes
• System diagnostics view	Yes
• Media Player	Yes
• HTML browser	Yes
• PDF display	Yes
• IP camera display	Yes

Subject to change without notice
© Copyright Siemens

3/12/18

◦ Bar graphs	Yes
◦ Sliders	Yes
◦ Pointer instruments	Yes
◦ Analog/digital clock	Yes
Lists	
◦ Number of text lists per project	500
◦ Number of entries per text list	500
◦ Number of graphics lists per project	500
◦ Number of entries per graphics list	500
Archiving	
◦ Number of archives per device	50
◦ Number of entries per archive	20 000
◦ Message archive	Yes
◦ Process value archive	Yes
◦ Archiving methods	
— Sequential archive	Yes
— Short-term archive	Yes
◦ Memory location	
— Memory card	Yes
— USB memory	Yes
— Ethernet	Yes
◦ Data storage format	
— CSV	Yes
— TXT	Yes
— RDB	Yes
Security	
◦ Number of user groups	50
◦ Number of user rights	32
◦ Number of users	50
◦ Password export/import	Yes
◦ SIMATIC Logon	Yes
Logging through printer	
◦ Alarms	Yes
◦ Report (shift log)	Yes
◦ Hardcopy	Yes
◦ Electronic print to file	Yes; PDF, HTML
Character sets	
◦ Keyboard fonts	
— US English	Yes
Transfer (upload/download)	
◦ MPI/PROFIBUS DP	Yes

© Copyright Siemens
3/12/18

• USB	Yes
• Ethernet	Yes
• using external storage medium	Yes
Process coupling	
• S7-1200	Yes
• S7-1500	Yes
• S7-200	Yes
• S7-300/400	Yes
• LOGO!	Yes
• WinAC	Yes
• SINUMERIK	Yes; with SINUMERIK option package
• SIMOTION	Yes
• Allen Bradley (EtherNet/IP)	Yes
• Allen Bradley (DF1)	Yes
• Mitsubishi (MC TCP/IP)	Yes
• Mitsubishi (FX)	Yes
• OMRON (FINS TCP)	No
• OMRON (LINK/Multilink)	Yes
• Modicon (Modbus TCP/IP)	Yes
• Modicon (Modbus)	Yes
• OPC UA Client	Yes
• OPC UA Server	Yes
Service tools/configuration aids	
• Backup/Restore manually	Yes
• Backup/Restore automatically	Yes
• Simulation	Yes
• Device switchover	Yes
Peripherals/Options	
Peripherals	
• Printer	Yes
• SIMATIC HMI MM memory card: Multi Media Card	Yes; Up to 128 MB
• SIMATIC HMI SD memory card: Secure Digital memory card	Yes; Up to 2 GB
• SIMATIC HMI CF memory card Compact Flash Card	No
• USB memory	Yes
• SIMATIC IPC USB Flashdrive (USB stick)	Yes; Up to 16 GB
• SIMATIC HMI USB stick	Yes; Up to 8 GB
• Network camera	Yes
Accessories	

Subject to change without notice
© Copyright Siemens
3/12/18

Enclosure material (front)	
◦ Plastic	No
◦ Aluminum	Yes
◦ Stainless steel	No

Dimensions	
Width of the housing front	330 mm
Height of housing front	241 mm
Mounting cutout, width	310 mm
Mounting cutout, height	221 mm
Overall depth	65 mm

Weights	
Weight without packaging	2.8 kg
Weight incl. packaging	3.5 kg

last modified: 09/07/2018

3/12/18

Subject to change without notice
© Copyright Siemens

SIMATIC WinCC V7

The scalable and open SCADA system
for maximum plant transparency and productivity

siemens.com/wincc-v7

3/12/18

SIMATIC SCADA systems

The suitable SCADA system for every application

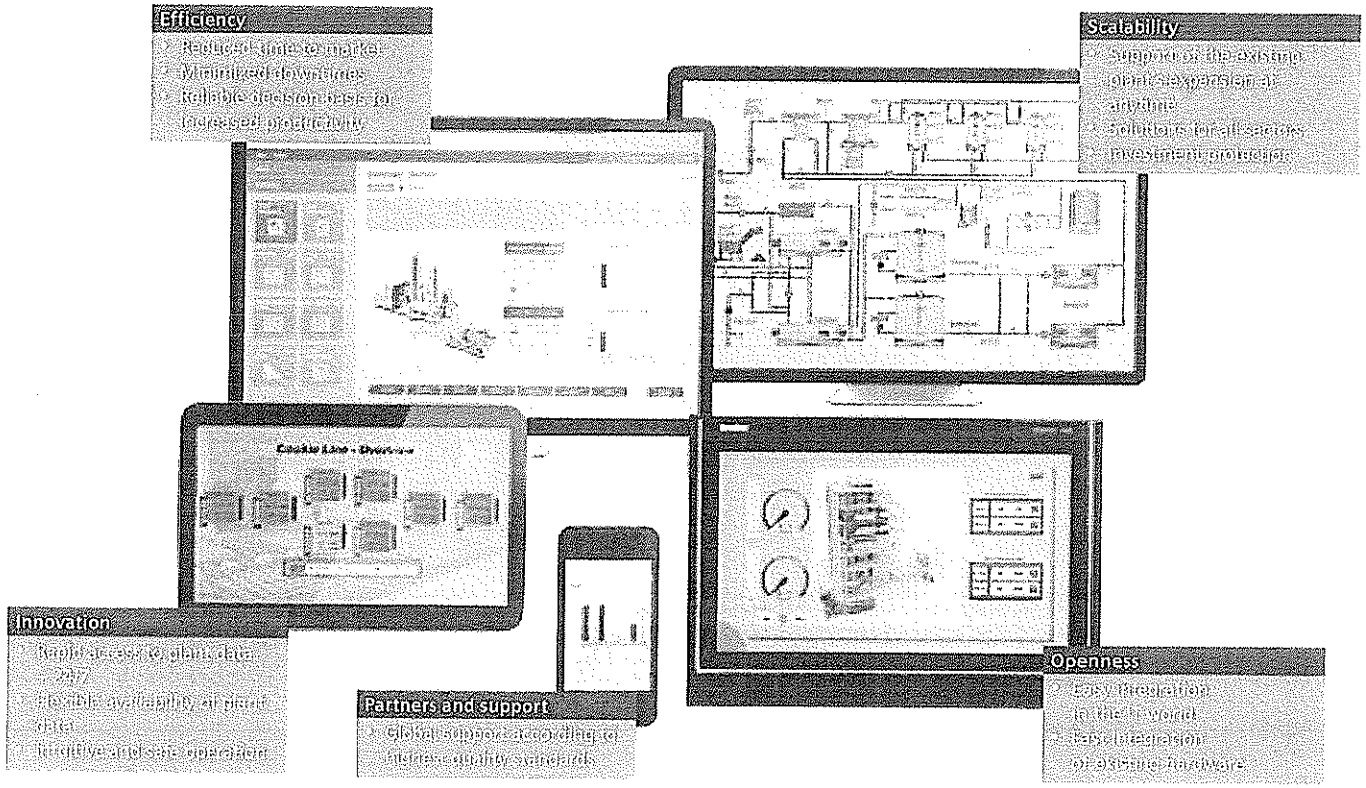

Requirements of the future

The data volume of modern industrial plants is continuously growing, entailing increasing requirements placed upon the employed SCADA solutions: Vast data volumes have to be managed and archived in the long term. At the same time, requirements in terms of performance are on the increase. Technologies, also from the consumer environment, are finding their way into industrial applications. Globalization calls for superior SCADA systems which are used worldwide. In addition, there is an increasing request for mobile access to plant information. Against the background of constantly increasing (energy) costs, all these requirements are topped off by the necessity for improved energy efficiency and productivity.

Fit for tomorrow, today

With SIMATIC WinCC V7, the scalable and open SCADA system by Siemens, you opt for the right choice throughout your plant's entire lifecycle.

SIMATIC SCADA systems and IPCs

SIMATIC SCADA systems and SIMATIC Industrial PCs form together a powerful and reliable platform for the acquisition, analysis and visualization of data. The coordinated and certified complete package consisting of both hardware and software offers the highest quality level for all industries.

3/12/18

Increase your productivity with SIMATIC WinCC V7

Efficiency in terms of engineering and operations control

Efficient engineering, integrated diagnostics functions and flexible production analysis ensure reduced time-to-market as well as minimized plant downtimes.

SIMATIC WinCC V7 offers a reliable decision basis for optimizations and thus supports increased productivity coupled with reduced costs.

Innovative solutions

Thanks to innovative technology, all important information is consistently available – rapidly, flexibly and safely. SIMATIC WinCC V7 thus eases your production's intuitive operation and monitoring – also remotely.

Easy scalability

SIMATIC WinCC V7 facilitates your plant's easy functional or sector-specific expansion or modernization. Benefit from redundancy concepts for increased availability or opt for central plant information archiving and analysis.

Openness

We rely on manufacturer-independent communication for the integration of existing hardware as well as for easy integration in the IT world. A further advantage: Specific expansions for individual solutions according to your requirements.

Solution Partners & support

WinCC Specialists are at your service as qualified solution providers worldwide. These certified and centrally audited partners realize your individual SCADA project, also with distributed client-server architectures involving redundancy or with applications involving energy data management systems.

Moreover, Siemens offers global support according to highest quality standards.

In addition to the 24/7 hotline, you can for example also consult experts in forums and access freely available demo projects.

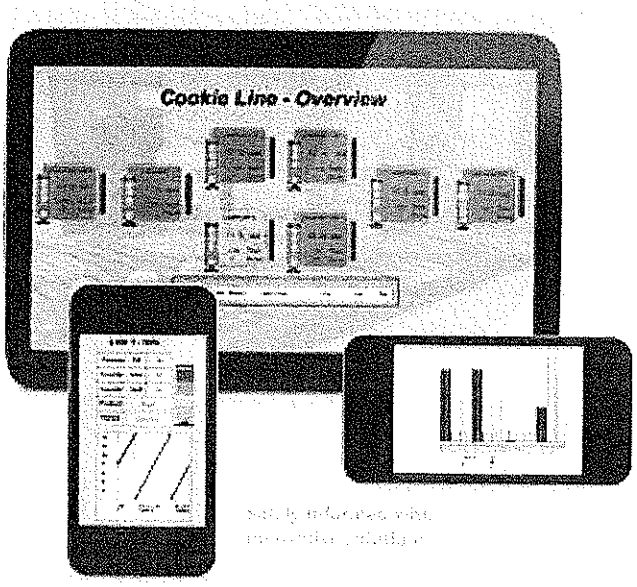

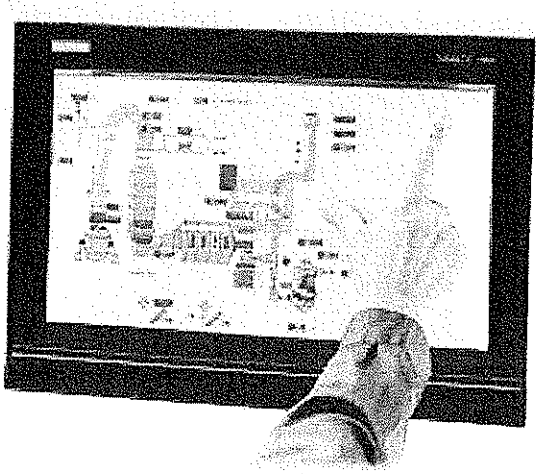

3/12/18

Easy scalability and efficient production analysis

Many user groups – with benefits for all

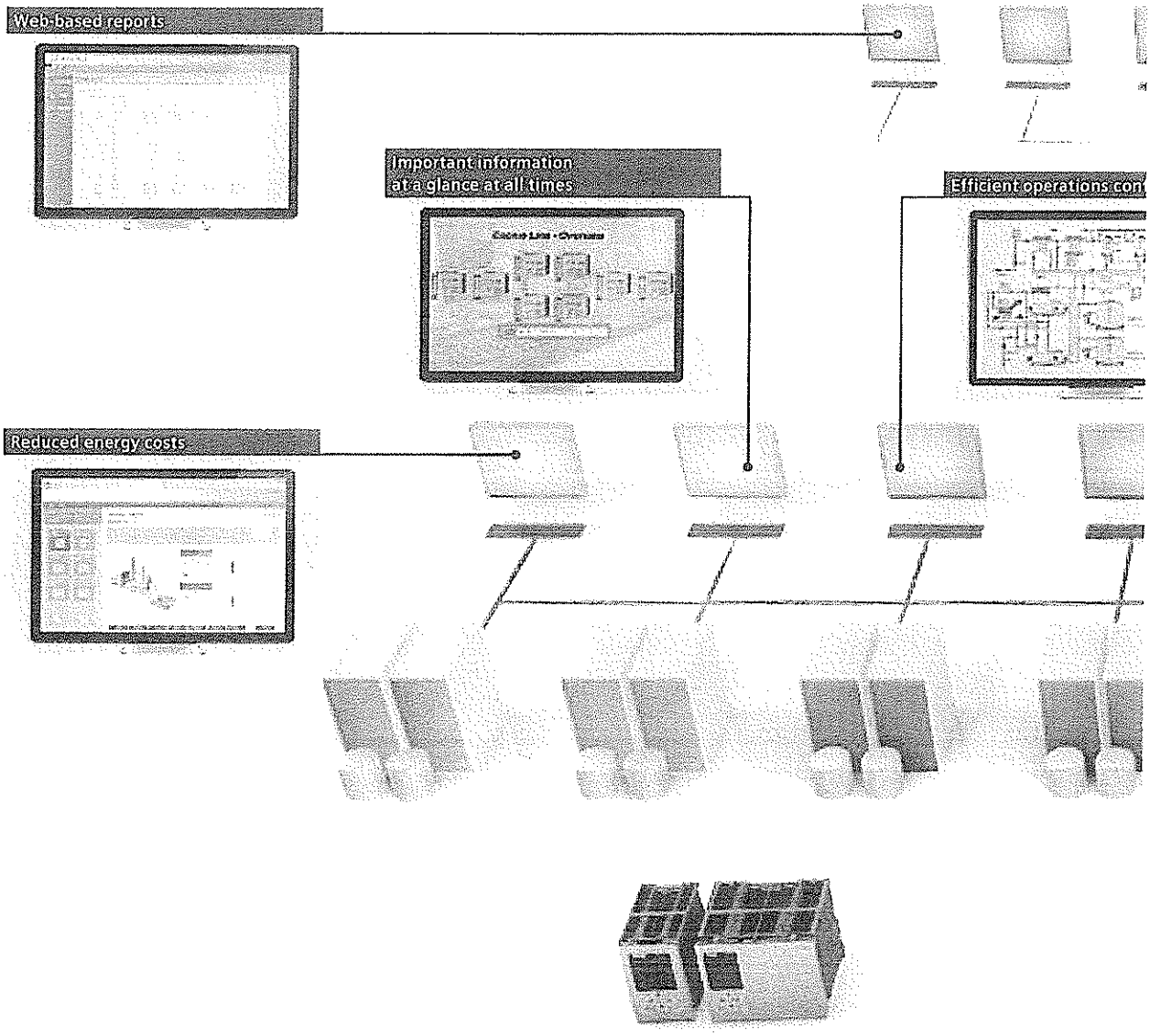

Automation and IT solutions are generally subject to permanent changes. Amongst others, this comprises modernizations of individual plant areas, subsequent plant expansions, implementation of central site-spanning monitoring solutions and optimization of site- or company-specific process workflows.

In order to meet such increasing requirements, the visualization solution has to be expandable as required without the risk of technology gaps or the need for complete new configurations.

3/12/18

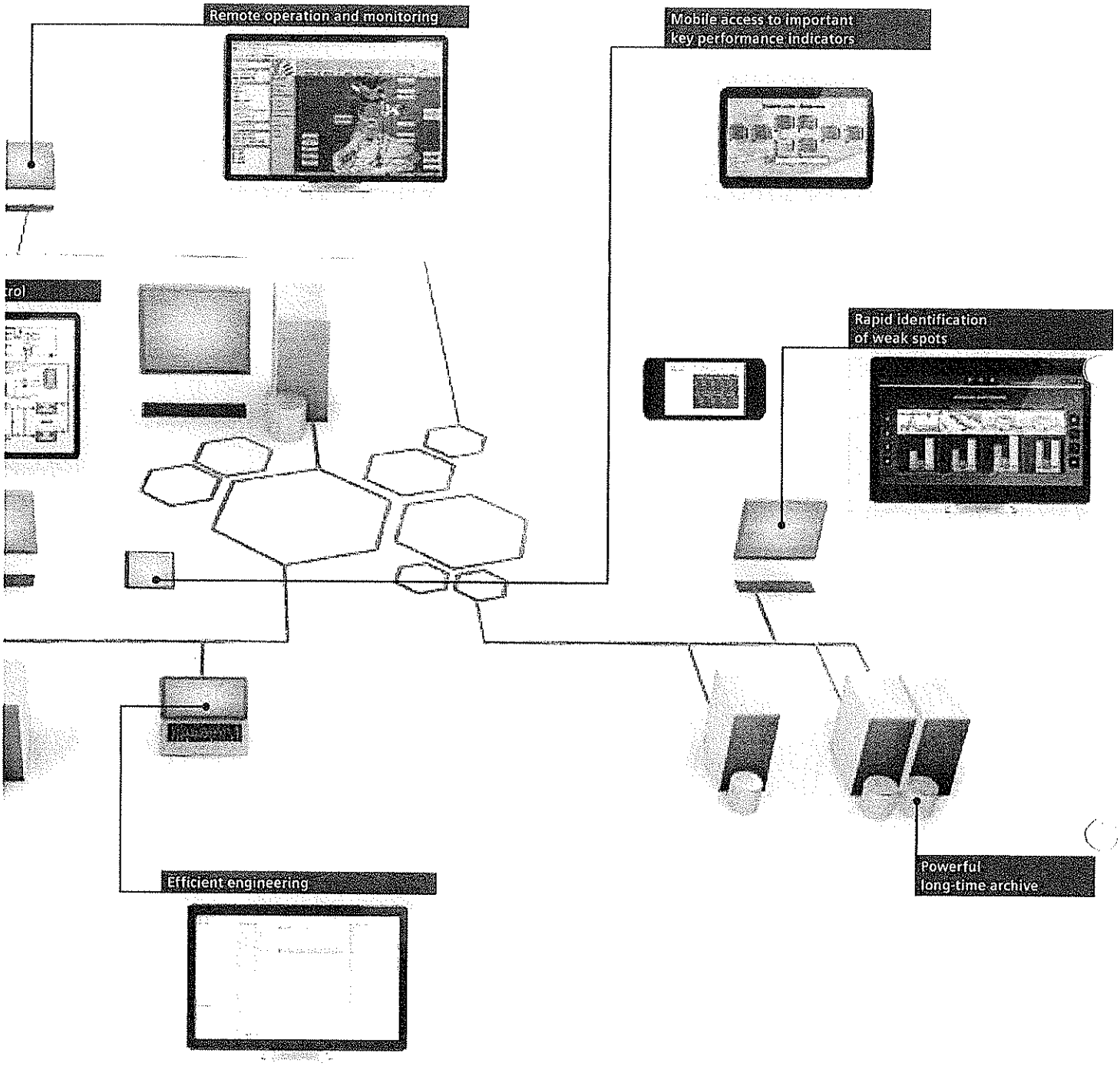

Investment protection is paramount. SIMATIC WinCC V7 offers the requested integrated scalability from the single-user system down to the distributed client-server solution with central long-time archive server and web-based solutions.

3/12/18

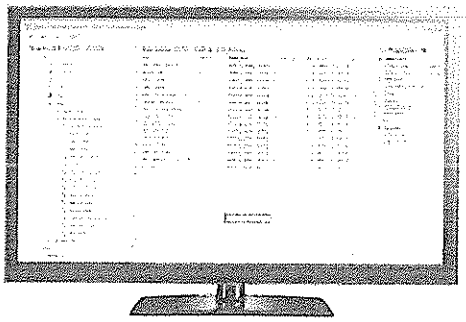

WinCC/SES:
Efficiently process sequence-based recipes

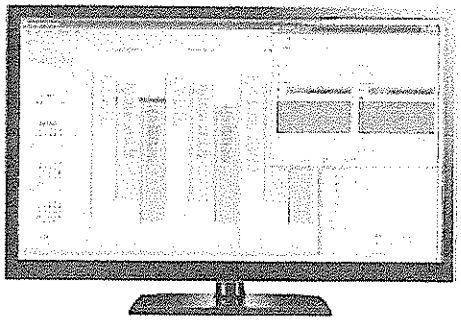

WinCC/CalendarScheduler:
Planning of calendar-based events

SIMATIC B.Data:
Increased production transparency

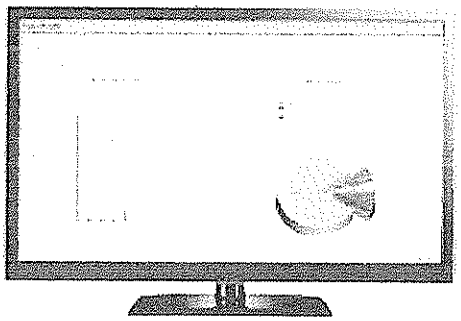

SIMATIC Information Server:
Comfortable analysis and report generation

SIMATIC WinCC V7 options

Software expansions for individual requirements

Individual functional or sector-specific software expansions are available in the form of WinCC options* as well as WinCC add-ons.

WinCC V7 options

Easy scalability

- **WinCC/Server** – for distributed client-server systems
- **WinCC/Redundancy** – for increased availability
- **SIMATIC Process Historian** – powerful, plant-wide long-time archive
- **WinCC/WebNavigator** – plant operation and monitoring via the Internet/Intranet
- **WinCC/WebUX** – mobile access to important plant information
- **WinCC/Telecontrol** – integration of distributed remote stations in the telecontrol system

Efficiency in terms of operations control

- **WinCC/UserArchive** – management of user data records
- **WinCC/Audit and WinCC/ChangeControl** – tracking of operator actions
- **SIMATIC Information Server** – web-based reports of historical plant data on basis of Microsoft Reporting Services or with Microsoft Excel
- **WinCC/PerformanceMonitor** – production analysis on the basis of individual key performance indicators and web-based performance reports in combination with the SIMATIC Information Server
- **SIMATIC B.Data** – optimized energy operations control
- **WinCC/CalendarScheduler** – planning of events as calendar function
- **WinCC/EventNotifier** – forwarding of information as e-mail or SMS
- **WinCC/SES** – sequencer for recipe and sequence-based processes

Openness for special requests

- **WinCC/IndustrialDataBridge** – bidirectional data exchange via standard interfaces – without programming
- **WinCC/ODK, WinCC/ConnectivityPack and WinCC/ConnectivityStation** – open interfaces for user-specific expansions

3/12/18

Efficiency

As key to increased productivity, SIMATIC WinCC V7 combines efficient engineering with powerful archiving and maximum data security. It serves as the basis for efficient operations control and intelligent production analysis.

Scalability

We offer stationary or mobile solutions for increasing requirements – with guaranteed safety. For this purpose, we use our SCADA know-how of more than 15 years across all sectors. No matter how moderate or expansive your requests – we provide the suitable solution.

Innovation

Benefit from information provision anytime and anywhere with mobile SCADA solutions – also with available tablet or smartphone hardware. The application of multitouch gestures in industrial environments opens the door to modern operating concepts.

Openness

Thanks to the support of international standards as well as native script and programming interfaces, also special requests can be easily realized.

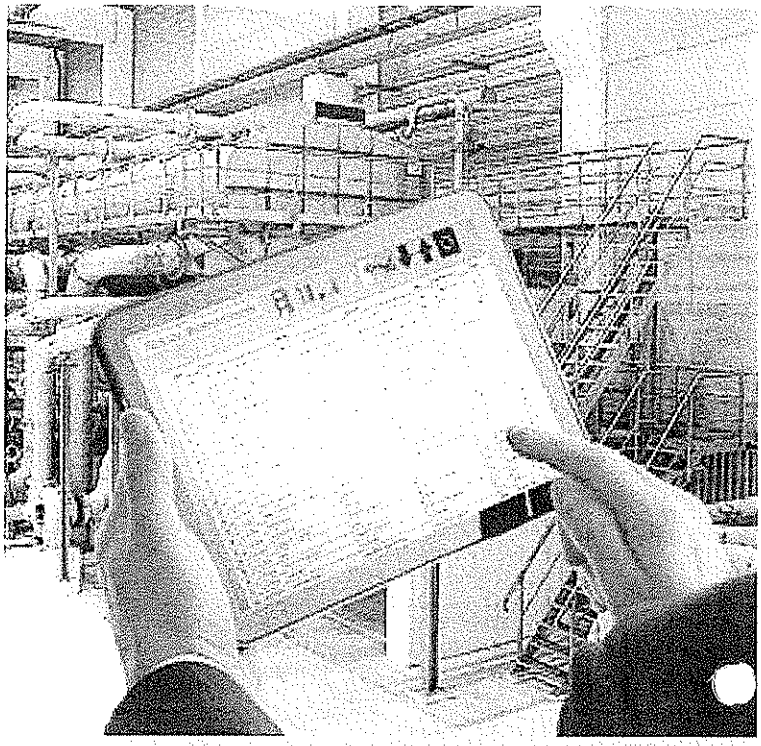

**Universal applicability –
solutions for all sectors and technologies**

SIMATIC WinCC V7 is technology- and sector-neutral and features a modular and easily expandable design. It is employed worldwide, both in single-user applications in the field of mechanical engineering as well as in complex multi-user solutions with redundant servers or web-based client access. References from numerous sectors prove the solution's versatility and high performance:

- Automotive production and suppliers
- Chemical and pharmaceutical industry
- Food, beverages and tobacco industry
- Machine and plant engineering
- Energy supply and distribution
- Trade and service sector
- Plastic and rubber industry
- Metal processing and steel industry
- Paper production and processing
- Printing industry, transport, traffic and logistics
- Water treatment and wastewater purification
- Building services management and management of properties

Further information is available
in the Reference Center:

www.siemens.com/automation/references

3/12/18

Find out more:

www.siemens.com/wincc-v7

Learn everything
about
SIMATIC WinCC V7
SIMATIC
WinCC V7 –
take a look!

Subject to change without prior notice
Article No. [illegible]
Depo [illegible]
PDF [illegible]
WS [illegible]
Printed in Germany
© Siemens AG 2016

[illegible]

All product designations may be trademarks or product names of Siemens AG or supplier companies whose use by third parties for their own purposes could violate the rights of the owners.

Siemens offers automation and drive products with industrial security functions which support the plant or machine operation. They especially enable the safe realization of [illegible] industrial security concepts.
Our products are continuously advanced under this aspect. We therefore recommend you to regularly inform yourself on updates of our products and to only use the respectively current versions. Related information is available at:
[illegible]
[illegible]

[illegible]

3/12/18

3/12/18

12. LABORATORY EQUIPMENT

3/12/18

DR 3900™ SPECTROPHOTOMETER

Applications

- Beverage
- Drinking Water
- Wastewater
- Food QC Lab
- Power

Prevent measurement errors...simply.

The proven technology you have come to expect from Hach just got better. Built with the future of water analysis in mind, the DR 3900 will give consistently accurate results in a simpler testing format.

Guided Procedure

The DR 3900 guides you step by step through the testing procedure like a GPS, so you can get the accurate results you need every time.

Elimination of False Readings

Scratched, flawed, or dirty glassware becomes a non-issue when your machine takes 10 readings and eliminates outliers.

Hands Free Updates*

RFID technology automatically updates the program calibration factors when you place a TNTplus box near the machine.

Flexible Connectivity

Built with 1 ethernet and 3 USB ports, the DR 3900 easily connects to your computer and is programmed to easily interface with Hach WIMS* or any LIMS system.

Sample Tracking*

Sample bottles with smart tags can easily be tracked with the optional Hach RFID sample-ID system, eliminating sample mix-ups and providing better sample traceability.

*

HACH®

Be Right™

3/12/19

Specifications*

Operating Mode	Transmittance (%), Absorbance and Concentration, Scanning
Light Source	Gas-filled Tungsten (visible)
Optical System	Reference beam, spectral
Wavelength Range	320 to 1100 nm
Wavelength Accuracy	± 1.5 nm (wavelength range 340 to 900 nm)
Wavelength Reproducibility	± 0.1 nm
Wavelength Resolution	1 nm
Wavelength Calibration	Automatic
Wavelength Selection	Automatic, based on method selection
Spectral Bandwidth	5 nm
Photometric Measuring Range	± 3.0 Abs (wavelength range 340 to 900 nm)
Photometric Accuracy	5 mAbs at 0.0 to 0.5 Abs 1 % at 0.50 to 2.0 Abs
Photometric Linearity	< 0.5 % to 2 Abs ≤ 0.01 % at >2 Abs with neutral glass at 546 nm
Stray Light	< 0.1 % T at 340 nm with $NaNO_2$
Display	7 TFT WVGA (800 pix x 480 pix)
Data Logger	2000 measured values (Result, Date, Time, Sample ID, User ID)
Preprogrammed Methods	> 240
User Programs	100
Sample Cell Compatibility	13 mm round, 16 mm round, 1 cm & 5 cm rectangular, 1 round, 1 square
Dimensions (H x W x D)	5.9 in x 13.8 in x 10 in (151 mm x 350 mm x 255 mm)
Weight	9.26 lbs. (4.2 kg)
Operating Conditions	10 to 40 °C
Storage Conditions	-30 to 60 °C
Enclosure Rating	IP30
Power Supply	Benchtop Power Supply
Power Requirements (Voltage)	110 - 240 V AC
Power Requirements (Hz)	50/60 Hz
Interfaces	USB type A (2), USB type B, Ethernet, RFID module
Warranty	12 months

**Subject to change without notice.*

Principle of Operation

Hach's TNTplus chemistries and spectrophotometers are made to work seamlessly with each other.

- *Many of the tests are EPA compliant.*
- *Over 35 tests available including these popular EPA Approved Parameters:*
  - *Ammonia*
  - *COD*
  - *Chlorine*
  - *Chromium*
  - *Iron*
  - *Nitrate*
  - *Nitrite*
  - *Nitrogen*
  - *Phosphorus*
  - *Sulfate*

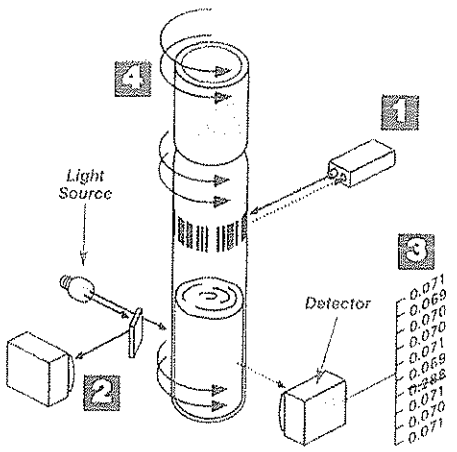

How TNTplus Works

1 **Barcode Recognition**
Simply drop in the vial and get results immediately with automatic method detection.

2 **Reference Detector**
Monitors and compensates for optical fluctuations.

3 **10X Measurement and Outlier Elimination**
Dirty, scratched, or flawed glassware, including fingerprints, is no longer an issue—instrument averages 10 readings and rejects outliers.

4 **Self-Contained Packaging—Reagents Inside Sealed Cap**
Reduces exposure to chemicals—no need to open pillows or clean glassware.

See our TNTplus video at: www.hach.com/tntplus

3/12/18

Available Tests

The following table lists available tests and overall ranges for the Hach DR 3900 Benchtop Spectrophotometer. The ranges may represent more than one available test for the instrument. Consult your Hach representative, Customer Service, the Hach Master Catalog, or the Hach web site at www.hach.com for complete details of all available tests for this instrument.

Parameter	Range	TNTplus Test
Alachlor	0.1 to 0.5 ppb, threshold	
Alkalinity, Total	25 to 400 mg/L	•
Aluminum	0.002 to 0.800 mg/L	•
Ammonia, Nitrogen	0.015 to 50.0 mg/L	•
Arsenic	0.020 to 0.200 mg/L	
Atrazine	0.5 to 3.0 ppb, threshold	
Barium	2 to 100 mg/L	
Benzotriazole	1.0 to 16.0 mg/L	
Boron	0.2 to 14.0 mg/L	
Bromine	0.05 to 4.50 mg/L	
Cadmium	.7 µg/L to 0.30 mg/L	•
Carbohydrazide	5 to 600 µg/L	
Chloramine, Mono	0.04 to 10.0 mg/L	
Chloride	0.1 to 25.0 mg/L	
Chlorine Dioxide	0.01 to 1000 mg/L	
Chlorine, Free	0.02 to 10.0 mg/L	•
Chlorine, Total	2 µg/L to 10.0 mg/L	•
Chromium, Hexavalent	0.010 to 1.00 mg/L	•
Chromium, Total	0.01 to 0.70 mg/L	•
Cobalt	0.01 to 2.00 mg/L	
Color	3 to 500 units	
COD (Chemical Oxygen Demand)	0.7 to 15,000 mg/L	•
Copper	1 µg/L to 8.0 mg/L	•
Cyanide	0.002 to 0.240 mg/L	
Cyanuric Acd	5 to 50 mg/L	
DEHA (Diethylhydroxylamine)	3 to 450 µg/L	
Dissolved Oxygen	6 µg/L to 40 mg/L	
Erythorbic Acid (Isoascorbic acid)	13 to 1500 µg/L	
Fluoride	0.02 to 2.00 mg/L	
Formaldehyde	3 to 500 µg/L	
Hardness, Total (Calcium and Magnesium as $CaCO_3$)	4 µg/L to 4.00 mg/L	
Hydrazine	4 to 600 µg/L	
Hydroquinone	9 to 1000 µg/L	
Iodine	0.07 to 7.00 mg/L	
Iron, Ferrous	0.02 to 3.00 mg/L	
Iron, Total	0.009 to 6.0 mg/L	•

Parameter	Range	TNTplus Test
Lead	3 µg/L to 2.0 mg/L	•
Manganese	0.006 to 20.0 mg/L	
Mercury	0.1 to 2.5 µg/L	
Methylethylketoxime (MEKO)	15 to 1000 µg/L	
Molybdenum, Molybdate	0.02 to 40.0 mg/L	
Nickel	0.006 to 6.0 mg/L	•
Nitrate, Nitrogen	0.01 to 35 mg/L	•
Nitrite, Nitrogen	0.002 to 250 mg/L	•
Nitrogen, Simplified Total Kjeldahl	0 to 16 mg/L	•
Nitrogen, Total	0.5 to 150 mg/L	•
Nitrogen, Total Inorganic	0.2 to 25.0 mg/L	
Nitrogen, Total Kjeldahl	1 to 150 mg/L	
Ozone	0.01 to 1.50 mg/L	
PCB (Polychlorinated Biphenyls)	1 to 50 ppm, threshold	
Phenols	0.002 to 0.200 mg/L	
Phosphonates	0.02 to 125.0 mg/L	
Phosphorus, Acid Hydrolyzable	0.06 to 100.0 mg/L	
Phosphorus, Reactive (Orthophosphate)	19 µg/L to 100.0 mg/L	•
Phosphorus, Total	0.06 to 100.0 mg/L	•
Potassium	0.1 to 7.0 mg/L	
Quaternary Ammonium Compounds	0.2 to 5.0 mg/L	
Selenium	0.01 to 1.00 mg/L	
Silica	3 µg/L to 100 mg/L	
Silver	0.005 to 0.700 mg/L	
Sulfate	2 to 900 mg/L	•
Sulfide	5 to 800 µg/L	
Surfactants, Anionic	0.002 to 0.275 mg/L	
Suspended Solids	5 to 750 mg/L	
Tannin and Lignin	0.1 to 9.0 mg/L	
TOC (Total Organic Carbon)	0.3 to 700 mg/L	
Tolyltriazole	1.0 to 20.0 mg/L	
Toxicity	0 to 100% inhibition	
TTHM (Trihalomethanes, Total)	10 to 600 µg/L	
TPH (Total Petroleum Hydrocarbons)	2 to 200 ppm, threshold	
Volatile Acids	27 to 2800 mg/L	•
Zinc	0.01 to 3.00 mg/L	

3/12/18

Ordering Information

DR 3900 Benchtop Spectrophotometer; includes adapter A for 1 round + AccuVac/1 cm rectangular cuvettes, manual, CD with manual and procedure manual in .pdf format. Power Supply. RFID version available only in a limited number of countries, including US, Australia, Bolivia, Canada, Guatemala, and New Zealand. For complete information, visit hach.com or contact your sales representative.

LPV440.99.00012 DR 3900 Spectrophotometer with RFID Technology, 110 - 240V

LPV440.99.00002 DR 3900 Spectrophotometer without RFID Technology,110 - 240V

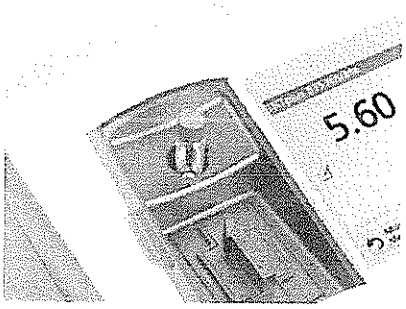

Accessories

LZV537	Test Filter Set
LZV873	Ethernet cable
LZV566	USB Barcode Scanner
LZV582	USB Keyboard
2960100	Thermo Printer

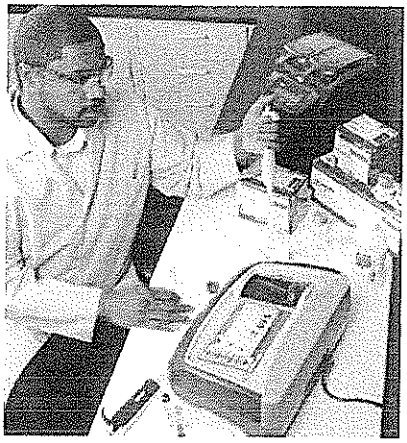

Service Options

Comprehensive warranty upgrade includes: All parts, labor, and shipping costs from the factory for depot repairs. One calibration per year on-site, factory recommended maintenance (including required parts), unlimited technical support calls. Also includes a loaner* while waiting for your factory repair. Please see service terms and conditions for additional details.

**Based on availability*

WRTUPGDR3900 DR 3900 Spectrophotometer WarrantyPlus™ Instrument Protection and Service

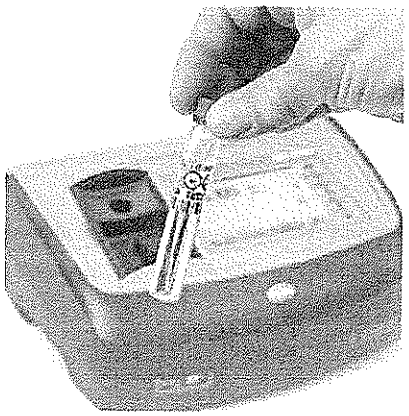

HACH COMPANY World Headquarters: Loveland, Colorado USA

United States 800-227-4224 tel 970-669-2932 fax orders@hach.com
Outside United States 970-669-3050 tel 970-461-3939 fax int@hach.com
hach.com

LIT2667 Rev 3
L12 Printed in U.S.A.
©Hach Company, 2012. All rights reserved.
In the interest of improving and updating its equipment, Hach Company reserves the right to alter specifications to equipment at any time.

Be Right™

3/12/18

PRODUCT INFORMATION
LABORATORY ANALYSIS
DRY THERMOSTAT
LT 200

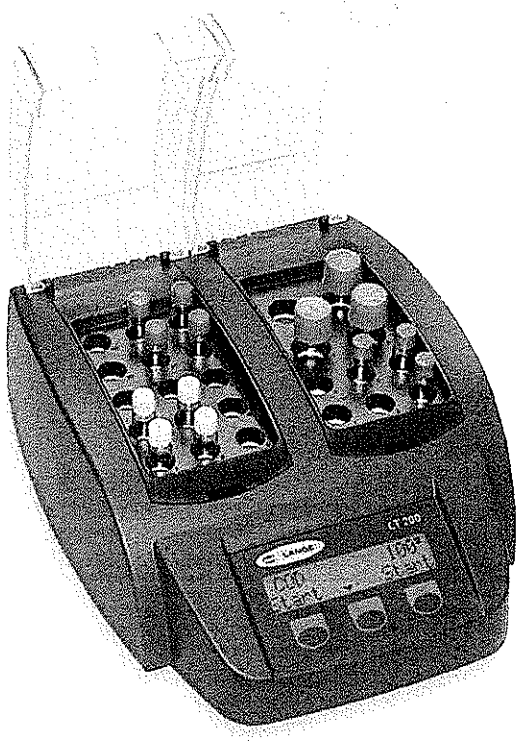

Thermostat LT 200 for standard and special digestions

Pre-programmed for all standard digestions and freely programmable for user specific digestions
→ **Great flexibility**

Very good temperature stability
→ **Excellent reproducibility**

Large, easily readable display and one-key operation for standard digestions
→ **Simple to use**

Simple solution for all digestions
A digestion step often has to be carried out before key parameters can be determined. For these parameters, the LT 200 thermostat ideally complements the LANGE cuvette test system. Two separately controllable heating blocks enable cuvettes and reaction vessels to be digested at identical or different temperatures and time settings.

The LT 200 has a digital timer with an automatic switch-off and acoustic signal. Two transparent splash protection lids close the thermostat while it is heating. The integrated anti-overheating feature and the insulated external shell provide additional safety.

Technical data

Type	LT 200-1	LT 200-2	LT 200-2	LT 200-2
Order no.	LTV082.99.10002	LTV082.99.21002	LTV082.99.23002	LTV082.99.51002
Heating programs	Pre-programmed for 40 °C, 100 °C, 148 °C and freely selectable 37–150 °C, 1–480 min.			
Heating rate	From 20 °C to 148 °C in 10 min.			
Temperature stability	±1 °C in conformity with EN, ISO, EPA methods			
Power input	115 V / 300 VA 230 V / 450 VA		115 V / 600 VA 230 V / 900 VA	
Weight	2 kg		2.8 kg	
Dimensions	250 × 145 × 310 mm (W×H×D)			
Schematic representation	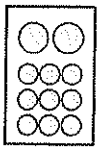	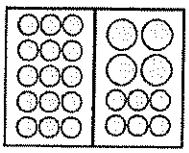	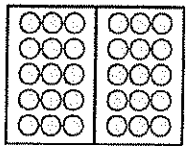	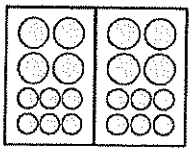
Number of cuvettes	9× 13 mm diameter 2× 20 mm diameter	21× 13 mm diameter 4× 20 mm diameter	30× 13 mm diameter	12× 13 mm diameter 8× 20 mm diameter

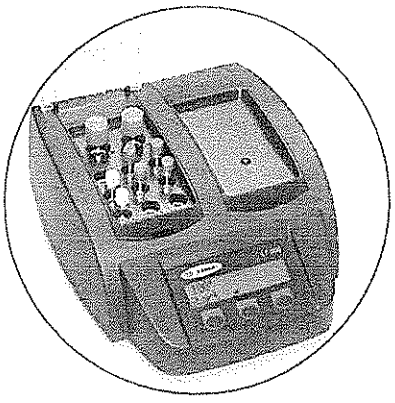

LT 200-1 with one heating block

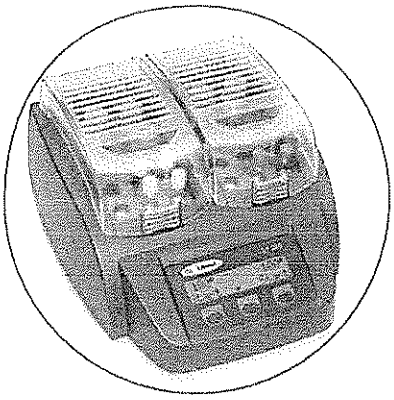

The LT 200-2 models feature two separately controllable heating blocks.

Applications	Temp. [°C]	Time [min.]
COD	148	120
Organic acids	100	10
Total nitrogen (LATON)	100	60
Total phosphorus	100	60
Metals (lead, cadmium, iron, copper, nickel, silver, zinc)	100	60
Total chromium	100	60
AOX, TOC	100	120
Carbon dioxide	100	60
Tin	100	30
Formaldehyde	40	10
Cyanide easily liberatable	100	60
User-specific programs	37–150	1–480

Subject to change without notice.

HACH LANGE Services

Contact us to place an order, request information or receive technical support.

www.hach-lange.com
Up to date and secure, with downloads, information and e-shop.

DOC082.52.02261.Aug08

3/12/18

Le schede tecnici sono disponibili anche nella versione in italiano

BOD (Biochemical Oxygen Demand) is a chemical procedure for determining the amount of dissolved oxygen needed by aerobic biological microorganisms in water.
The analysis occurs in a given water sample at certain temperature over a specific period.
It is most commonly expressed in milligrams of oxygen consumed per liter of sample at the constant temperature of 20 °C during 5 days of incubation (BOD_5) or monitoring the complete oxidation value after a maximum period of 30 days ($BOD_{ultimate}$).

BOD determination is widely used as an indication of the organic quality of water and the degree of organic pollution of water.

BOD Sensor

The BOD Sensor is the mercury-free and reliable solution for BOD determination. **Easy to handle, quick and easy to read**.
A microprocessor-controlled pressure transducer transfers the BOD value directly to the display: **results are displayed directly in mg/l** with **no need for further calculation**.
Manufactured with premium materials, it automatically stores 5 BOD measurements at 24-hour intervals meaning that analysis can continue over the weekend.
The BOD value can also be obtained directly from the display at any time, even after five days.
Measurement is available on 4 different scales - 90, 250, 600 and 999 ppm BOD. Higher values can be measured by diluting the sample.

2 lithium batteries and KOH trap included

BOD Sensor Set

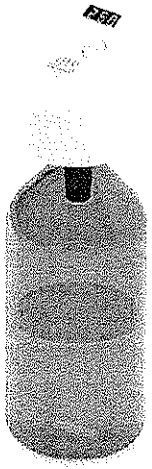

The BOD Sensor Set is a **ready-to-use solution** consisting of a BOD Sensor, a dark glass bottle, an alkali holder to absorb the carbon dioxide and a stirring bar.
This simple configuration was designed to meet the demands of those laboratories that carry out **individual BOD analysis** only.
The dark glass bottle can take sample quantities of from 100 to 400 ml.
The BOD Sensor Set is designed for use with the VELP MST magnetic stirrer, sold separately (Code No F203A0160).

The MST magnetic stirrer with ABS structure is a **small, simple and efficient** stirrer.
Extremely useful where a small but **reliable** instrument is needed.
The MST stirrer **remains cold** even after several days of continuous use.

3/12/18

BOD Sensor System

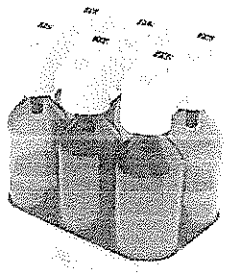

BOD Sensor System is available in 6- or 10-place configuration, including a 6- or 10-position stirring station with BOD Sensors, dark glass bottles, alkali holders for absorbing the carbon dioxide and stirring bars.

The 6-position Stirring Station is **extremely simple to handle** and the VELP stirring quality is guaranteed.
It **remains cold** even after several days of continuous use.

The **space saving footprint** means that up to 5 Stirring Stations for a total of 30 samples can be placed in a VELP incubator (FOC 215E) simultaneously.

Constant Commitment to Knowledge Development

CONTROL TESTS

VELP offers two accessories to test the accuracy of BOD instruments:

- BOD Sensor Check (A00000135): a quick test to check if the sensor is operating properly.
- Control Test Tablets (A00000136): to check the correct functioning of the system and the calibration of the pressure sensor through a 5-day test.

Features	Description
Construction Material:	Technopolymer
Display:	3-digit LED
Electronic protection degree CEI EN 60529:	IP 54
Supply:	2 lithium batteries per each sensor
BOD Sensor System 6 Dimension (WxHxP):	270x300x185 mm (10.6x11.8x7.3 in)
BOD Sensor System 6 Weight:	2.3 Kg (5.1 lb)
BOD Sensor System 10 Dimension (WxHxP):	432x300x165 mm (17.0x11.8x6.5 in)
BOD Sensor System 10 Weight:	3.0 Kg (6.6 lb)
Description	Code No.
BOD Sensor Set	F102B0134
BOD Sensor System 6 - 230 V / 50 Hz	S10220136
BOD Sensor System 6 - 230 V / 60 Hz	S10230136
BOD Sensor System 6 - 115 V / 60 Hz	S10240136
BOD Sensor System 10 - 230 V / 50 Hz	S10220137
BOD Sensor System 10 - 230 V / 60 Hz	S10230137
BOD Sensor System 10 - 115 V / 50 Hz	S10240137

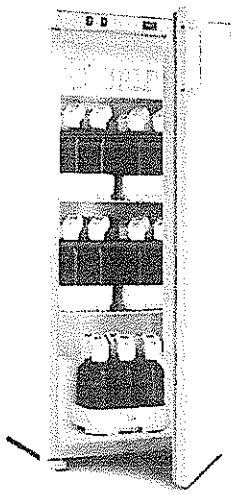

Place up to 30 samples in a
VELP FOC 215E cooled incubator

Your authorized agent

We reserve the right to make technical alterations
We do not assume liability for errors in printing, typing or transmission

VELP Scientifica srl
via Stazione 16
20040 Usmate (Milano) Italy
Tel +39 039 628811
Fax +39 039 6288120
inse@velp.it
www.velp.com

3/12/18

VELP SCIENTIFICA
Lab Solutions

Cooled Incubator

Constant temperature at 20 °C
Purposely designed for BOD (Biochemical Oxygen Demand)

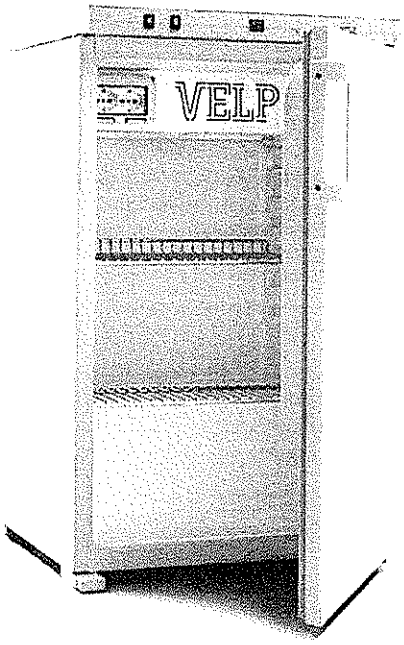

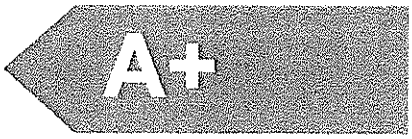

VELP incubators have been designed to keep any product at a constant temperature, for a wide range of incubation and test application where an accurate and precise temperature control is required along with stable temperature, including Biochemical Oxygen Demand.

VELP Scientifica **FTC 120** is a medium-size cooled incubator powered by to two internal socket and where samples are incubated at a **constant temperature of 20 °C**.
Forced air circulation ensures a **uniform temperature** inside the incubation chamber.
The internal temperature can be constantly monitored through the **2-digit digital display**.

VELP incubators are characterized by a **high-efficiency rate** due to their cooling system in **A+ class**, to better preserve both the environment and what is kept inside.

Environment

VELP SCIENTIFICA

3/12/18

Features and benefits

Capacity
Enhanced internal space, for 3x BOD Sensor System 6 or 2x BOD Sensor System 10 simultaneously

A+ Class Cooling System
High-efficiency and energy saving units: limited consumption and lower operating cost

Temperature Stability and Homogeneity
Excellent reliability is achieved: only ± 0.5 °C

Constant Commitment to Knowledge Development

Technical Data	Description
Display:	2-digit LCD display
Total volume:	120 liters
Settable temperature:	20 °C, constant
Temperature stability and homogeneity:	± 0.5 C°
Electronic thermoregulation system:	traditional
Shelves (supplied; maximum)	2 (max. 2)
Internal plugs	2
Capacity	3x BOD Sensor System 6 or 2x BOD Sensor System 10
Power supply:	230V-50/60Hz
Power:	120 W
Weight:	36 Kg (79.4 lb)
Dimension (WxHxD):	540x912x550 mm (21.3x49.7x21.7 in)

Ordering information Code No	Description
F10300300	FTC120 Cooled incubator

Your authorized agent

We reserve the right to make technical alternations
We do not assume liability for errors in printing, typing or transmission

VELP Scientifica srl
via Stazione 16
20040 Usmate (Milano) Italy
Tel +39 039 628811
Fax +39 039 6288120
inse@velp.it
www.velp.com

3/12/18

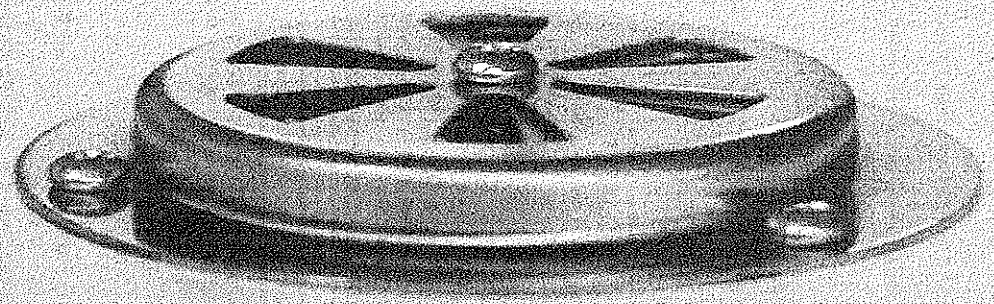

drying ovens
series 631 y 632 PLUS
NAHITA

3/12/18

Nahita drying ovens are used in research laboratories, hospitals and industry for sample drying and disinfecting materials, and other applications.
Made of painted steel and kiln-dried, have a stainless steel interior for an easy clean and a door with double glazed window that lets you control the evolution of the samples at any times.They have digital regulation of temperature and time so that allow a precise control of these processes.

features and design of the equipment

Modern and functional design destined to extract the maximum output to your equipment:

- Exterior metal furniture cover with epoxy and interior of stainless steel, highly resistant to acids and corrosives, very easy to clean.
- Door with double glazed window for external control, no temperature variations.
- Supplied with trays (2 units, height adjustable), which provides great flexibility of use allowing to introduce bottles and containers of different sizes.

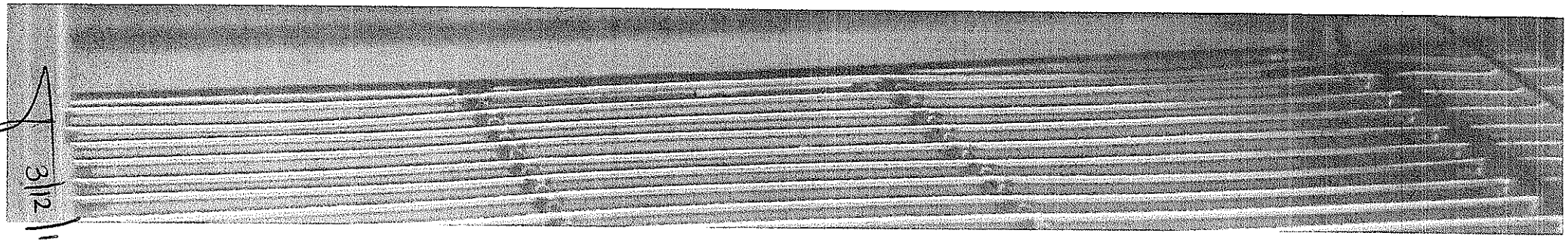

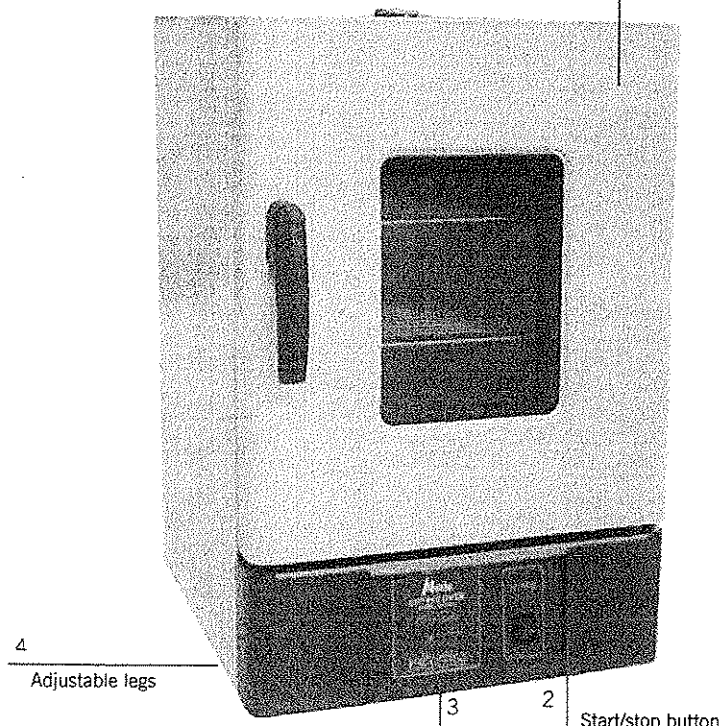

drying ovens series 631 and 632 PLUS: back of the equipment

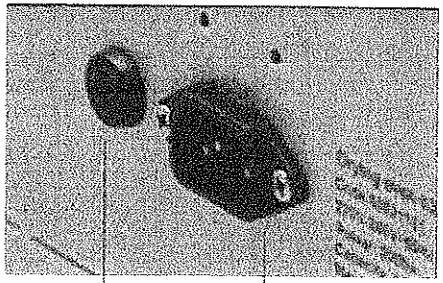

3/12/18

technical specifications

- Air circulation system by natural convection (631 Serie plus) or forced air with switch air circulation (632 serie plus).
- Control panel with keyboard and digital display.
- Adjustable legs for easy installation.
- Protection system overheat with visual and audible alarm.

drying ovens series 631 and 632 PLUS: front panel

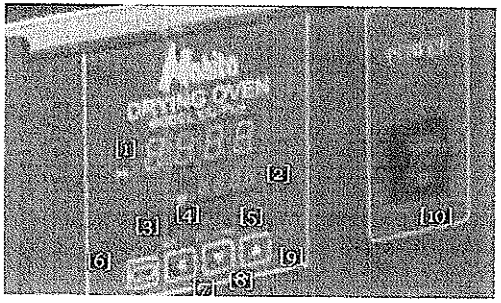

[01] Temperature display
[02] Display user-selected temperature
[03] Alarm light LED
[04] Light AutoFit LED
[05] Operating light LED
[06] Set –up button LED
[07] Cursor button
[08][09] Time and Temperature button
[10] Switch ON / OFF

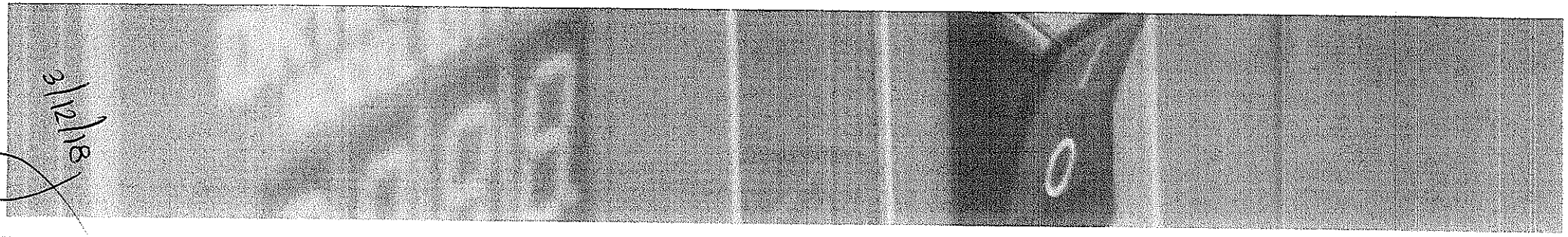

technical specifications series 631 PLUS

Code	JBD009	JBD001	JBD002	JBD003	JBD004
Capacity	18 L	30 L	45 L	65 L	125 L
Range T			-80-250 ºC		
Resolution			1 ºC		
Temperature fluctuation			± 1.0 ºC (configurable a 0.1 ºC*)		
Homogeneity			3%		
Consumo	0.6 Kw	0.8 Kw	1.0 Kw	1.5 Kw	2.3 Kw
Dimensions (cm)					
Exterior	44x38x55 cm	46x51x69 cm	50x55x73 cm	55x55x84 cm	64x68x91 cm
Interior	26x26x26 cm	31x31x31 cm	35x35x35 cm	40x36x45 cm	50x45x55 cm
Weight	20 Kg	39 Kg	42 Kg	53 Kg	58 Kg
Fusible	5 A	10 A	10 A	15 A	20 A
Power			220 V, 50 Hz ± 10%		
*consult					

technical specifications series 632 PLUS

Code	JBD005	JBD006	JBD007	JBD008
Capacity	30 L	45 L	65 L	125 L
Range T		-80-250 ºC		
Resolution		1 ºC		
Temperature fluctuation		± 1.0 ºC (configurable a 0.1 ºC*)		
Homogeneity		2%		
Consumo	0.8 Kw	1.0 Kw	1.5 Kw	2.3 Kw
Dimensions (cm)				
Exterior	46x51x69 cm	50x55x73 cm	55x55x84 cm	64x68x91 cm
Interior	31x31x31 cm	35x35x35 cm	40x36x45 cm	50x45x55 cm
Weight	39 Kg	42 Kg	53 Kg	58 Kg
Fusible	10 A	10 A	15 A	20 A
Power		220 V, 50 Hz ± 10%		
*consult				

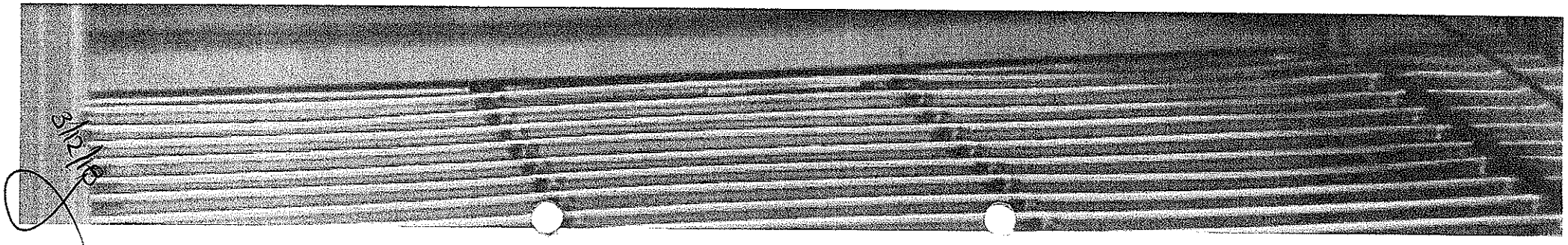

AUXILAB, S.L.
Polígono Morea Norte Calle D Nº 6
C.P.: 31191 [Beriain] Navarra
T: +34 948 310 513
comercial@auxilab.es
www.auxilab.es

ROGO-SAMPAIC
23 Rue Ampère, ZI de Vilemilan
91325 Wissous (Francia)
T: +33 1 69 53 67 67
rogosampaic@rogosampaic.com
www.rogosampaic.com

ROGO-SAMPAIC
matériel de laboratoire

AUXILAB S.L.
Material de laboratorio
Laboratory supplies

NAHITA-BLUE LABORATORY BALANCES

Here we present our new range of laboratory balances for analytical and routine applications. From high performance equipments that offer quick and accurate measurements to simple balances for routine applications, our new range will meet your necessities.

NAHITA-BLUE PICTOGRAMS

Internal adjusting:
Quick setting up of the balance's accuracy with internal adjusting weight (motor driven).

Adjusting program CAL:
For quick setting up of the balance's accuracy. External adjusting weight required.

Data interface RS-232:
To connect the balance to a printer, PC or network..

USB:
To connect the balance to a printer, PC or other peripherals.

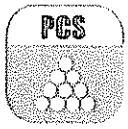

Piece counting:
Reference quantities selectable. Display can be switched from piece to weight.

Percentage determination::
Determining the deviation in % from the target value (100 %).

Weighing units::
Can be switched to e.g. nonmetric units at the touch of a key.

Suspended weighing:
Load support with hook on the underside of the balance.

Battery operation:
Ready for battery operation. The battery type is specified for each device.

Rechargeable battery pack

Universal mains adapter:
110/220 V

Mains adapter:
230 V/50 Hz in standard version for UE.

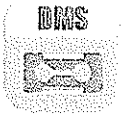

Weighing principle: Strain gauges

Weighing principle: Electromagnetic force compensation
Coil inside a permanent magnet.

Note: Manufacturer reserves the right to modify features and photographies of hte goods.

3/12/18

Analytical balances, Series 5134 INT and 5134 EX

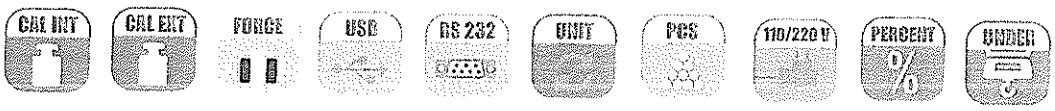

1| Electromagnetic force compensation technology
2| Aluminum alloy die cast base and mains and stainless steel pan
3| Glass windshield with lateral and upper sliding doors
4| Height adjustable feet and bubble level for a correct levelling of the balance
5| Easy to read LCD display with backlit
6| Internal (series 5134 INT) or external (series 5134 EX) calibration; external calibration weight included
7| Full capacity taring
8| Hook for below weighing
9| Selectable measure units: g, mg, ct, oz
10| Piece counting function with selection of the reference number of pieces
11| Percentage function
12| Possibility of selection of different sensitivity levels and weighing speed to adapt to environmental conditions
13| Overload protection
14| RS232 and USB outputs

1| Back of equipment

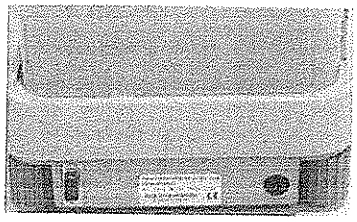

2| Hook for below weighing

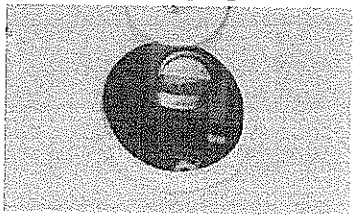

Model		
Series 5134 EX; External calibration	KBF001	KBF003
Series 5134 INT; Internal calibration	KBF002	KBF004
Accuracy	Class I	
Capacity max.	120 g	220 g
Capacity min.	10 mg	10 mg
Division	0.0001 g	
Verification scale value	0.001 g	
Repeatability	±0.0002 g	
±0.5e	0≤m≤50000	
±1.0e	50000<m≤200000	
±1.5e	200000<m	
Stabilization time	≤8 seconds	
Operating temperature	17.5ºC~22.5ºC, fluctuation range<1ºC/h	
Relative humidity (RH)	50%~75%	
Pan size	Ø 80 mm	
Windshield	225x220x265 mm(L*A*H)	
Total dimensions	340x215x350 mm(L*A*H)	
Peso neto	7.2 kg	
Power	AC110-220V 50Hz / DC9V-2.2A	

Note: Manufacturer reserves the right to modify features and photographies of hte goods.

3/12/18

Nahita le ofrece una completa serie de desecadores de vidrio, con o sin posibilidad de acoplamiento a una bomba de vacío, para mantener sus muestras y reactivos libres de humedad en todo momento. Los desecadores presentan brida plana y la porción inferior modelada para sostener la placa de muestras sobre el agente desecante, y se suministran junto con la tapa y el disco de porcelana para muestras. Estos componentes también pueden adquirirse por separado.

Nahita offers a complete series of glass desiccators, with or without connection to vacuum pump, to keep samples and reagents free of moisture. Desiccators present flat flange and the lower portion modeled to hold the porcelain disk over the desiccant agent, and are supplied together with the lid and the porcelain disk. These components are also available individually.

Desecador tapa botón | Desiccators with knob lid

Marca|Trademark: **Nahita**

Sin posibilidad de acoplamiento a bomba de vacío, la tapa presenta un asidero grande para una fácil manipulación.

Without connection to vacuum pump, the lid presents a big andel for an easy manipulation.

Referencia Code	Capacidad Capacity	Ø Interior Inner Ø	Ø Exterior Outer Ø	Altura Height
10262100	1 l	100 mm	136 mm	180 mm
10262150	2 l	150 mm	210 mm	220 mm
10262200	4 l	200 mm	270 mm	300 mm
10262250	7 l	250 mm	305 mm	360 mm
10262300	14 l	300 mm	365 mm	420 mm

Desecador tapa llave | Desiccators with stopcock lid

Marca|Trademark: **Nahita**

Tapa con tubuladura y llave de paso para acoplamiento a bomba de vacío. La presión de vacío que pueden soportar estos desecadores es de 6 KPa.

Lid with ground joint and vacuum stopcock. These desiccators can support a vacuum pressure of 6 KPa..

Referencia Code	Capacidad Capacity	Ø Interior Inner Ø	Ø Exterior Outer Ø	Altura Height
10264100	1 l	100 mm	136 mm	180 mm
10264150	2 l	150 mm	210 mm	220 mm
10264200	4 l	200 mm	270 mm	300 mm
10264250	7 l	250 mm	305 mm	360 mm
10264300	14 l	300 mm	365 mm	420 mm

*Nota: el fabricante se reserva el derecho de modificar las características y fotografías de los productos.
*Note: Manufacturer reserves the right to modify features and photographies of the goods.

Pol. Morea Norte, Calle D nº6
31191 - Beriain (Navarra) ESPAÑA
T: +34 948 310 513
correo@auxilab.es - www.auxilab.com

3/12/18

Tapa botón para desecador | Knob lids for desiccators

Marca|Trademark: **Nahita**

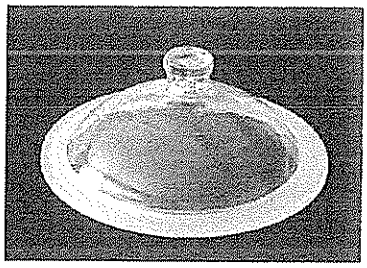

Referencia Code	Para desecador de For desiccators of
10262910	100 mm
10262915	150 mm
10262920	200 mm
10262925	250 mm
10262930	300 mm

Tapa tubuladora para desecador | Ground socket lids for desiccators

Marca|Trademark: **Nahita**

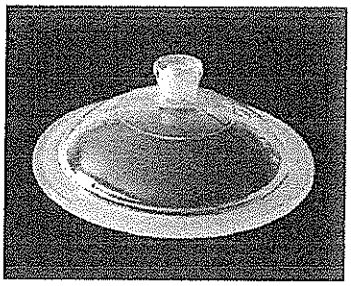

Referencia Code	Para desecador de For desiccators of	Esmerilado Ground
10264910	100 mm	19/28
10264915	150 mm	19/28
10264920	200 mm	24/29
10264925	250 mm	24/29
10264930	300 mm	24/29

Llave esmerilada para desecador | Ground stopcock for dessicators

Marca|Trademark: **Nahita**

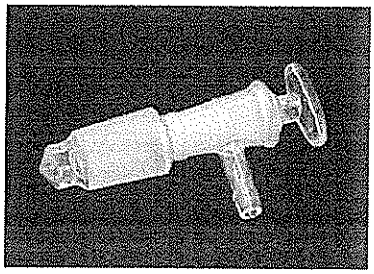

Referencia Code	Esmerilado Ground
10264001	19/28
10264000	24/29

Disco para desecadores | Dessiccator disks

Marca|Trademark: **Nahita**

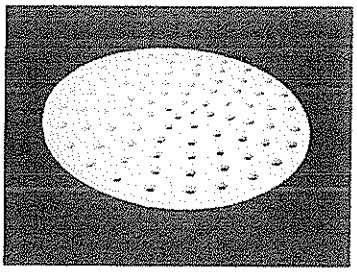

Referencia Code	Diámetro Diameter
20239100	90 mm
20239150	140 mm
20239200	190 mm
20239250	220 mm
20239300	275 mm

*Nota: el fabricante se reserva el derecho de modificar las características y fotografías de los productos.
*Note: Manufacturer reserves the right to modify features and photographies of the goods.

Pol. Morea Norte, Calle D nº6
31191 - Beriain (Navarra) ESPAÑA
T. +34 948 310 513
correo@auxilab.es · www.auxilab.com

3/12/18

Addendum-1 to the Tender Document for Procurement of: Construction of Wastewater Plant

Tender No: **8732-IFT-41252**

Project name: **Danilovgrad Municipal Infrastructure Project**

Tender identification: **EBRD ME DAN 9000**

First Stage tender submission date: **21.08.2017**

Addendum date: **10.08.2017**

03/12/18

Procurement of Construction of Wastewater Plant for D.O.O. "Vodovod i kanalizacija" Danilovgrad, State of Montenegro, 8732-IFT-41252

This addendum is issued in accordance with Para 8 of VOLUME I.i (Instructions to Tenderers). The addendum amends and/or supplements the provisions in the tender documents. The original and the changed sections are both published here. Whenever there is a conflict, the provisions herein shall prevail over those in the tender documents.

Ref. in Tender Documents	Amended Text

VOLUME I.ii – Tender Data

12	**Tender identification**
para. 12.2(b) (original)	EBRD ME DAN 9000 The tenderer shall record on the tender envelope the Employer's name and address, the tender identification and the words "DO NOT OPEN BEFORE AUGUST 21st , 2017 AT 12:00"
12	**Tender identification**
para. 12.2(b) (amended)	EBRD ME DAN 9000 The tenderer shall record on the tender envelope the Employer's name and address, the tender identification and the words "DO NOT OPEN BEFORE SEPTEMBER 7th, 2017 AT 12:00"

13	**Deadline for submission of First Stage tenders**
para. 13.1 (original)	August 21st , 2017 at 12:00
13	**Deadline for submission of First Stage tenders**
para. 13.1 (amended)	September 7th, 2017 at 12:00

03/12/18

Addendum-2 to the Tender Document for Procurement of: Construction of Wastewater Plant

Tender No: **8732-IFT-41252**

Project name: **Danilovgrad Municipal Infrastructure Project**

Tender identification: **EBRD ME DAN 9000**

First Stage tender submission date: **07.09.2017**

Addendum date: **22.08.2017**

03/12/18

Procurement of Construction of Wastewater Plant for D.O.O. "Vodovod i kanalizacija" Danilovgrad, State of Montenegro, 8732-IFT-41252

This addendum is issued in accordance with Para 8 of VOLUME I.i (Instructions to Tenderers). The addendum amends and/or supplements the provisions in the tender documents. The original and the changed sections are both published here. Whenever there is a conflict, the provisions herein shall prevail over those in the tender documents.

Ref. in Tender Documents	Amended Text

VOLUME I.ii – Tender Data

12	**Tender identification**
para. 12.2(b) (original)	EBRD ME DAN 9000 The tenderer shall record on the tender envelope the Employer's name and address, the tender identification and the words "DO NOT OPEN BEFORE SEPTEMBER 7th, 2017 AT 12:00"
12	**Tender identification**
para. 12.2(b) (amended)	EBRD ME DAN 9000 The tenderer shall record on the tender envelope the Employer's name and address, the tender identification and the words "DO NOT OPEN BEFORE SEPTEMBER 14th, 2017 AT 12:00"

13	**Deadline for submission of First Stage tenders**
para. 13.1 (original)	September 7th, 2017 at 12:00
13	**Deadline for submission of First Stage tenders**
para. 13.1 (amended)	September 14th, 2017 at 12:00

05/12/18

Addendum-3 to the Tender Document for Procu nt of: Construction of Wastewater Plant

Tender No: **8732-IFT-41252**

Project name: **Danilovgrad Municipal Infrastructure Project**

Tender identification: **EBRD ME DAN 9000**

First Stage tender submission date: **07.09.2017**

Addendum date:**15.05.2018**

03/12/18

Procurement of Construction of Wastewater Plant for D.O.O. "Vodovod i kanalizacija" Danilovgrad, State of Montenegro, 8732-IFT-41252

This addendum is issued in accordance with Para 8 of VOLUME I.i (Instructions to Tenderers). The addendum amends and/or supplements the provisions in the tender documents. The original and the changed sections are both published here. Whenever there is a conflict, the provisions herein shall prevail over those in the tender documents.

Ref. in Tender Documents	Amended Text

VOLUME I.ii – Tender Data

9	**Language of Tender**
para. 9.1 (original)	English
9	**Language of Tender**
para. 9.1 (amended)	English, **except for Second stage Tender, that needs to be delivered in English, with Montenegrin translation**

VOLUME I.viii – Price Schedules

Price Schedules are amended, and revised version of the Price Schedules are attached to this Addendum (See Attachment 1 to Addendum No 3).

VOLUME I.ix – Schedule of Supplementary Information

c)	**Attachment 3 Other Information**
ii) (original)	DETAILS OF PROPOSED INSURER (S) The Tenderer shall provide name (s) and address (s) the insurer (s) and its/their principal terms for the insurances required under the Contract. and described in Volume II. (Contract), Appendix 3. (Insurance Requirements).
c)	**Attachment 3 Other Information**
ii) (amended)	The Tenderer shall provide name (s) and address (s) the insurer (s) and its/their principal terms for the insurances required **under the Contract.**

VOLUME II.i – General Conditions of Contract (GCC)

03/12/18

	General Conditions of Contract
(original)	The Conditions of Contract for Plant and Design-Build: General Conditions of Contract for electrical and mechanical Plant, and Building and Engineering Works, designed by the Contractor, Part A shall be those forming Volume II. i of the "Conditions of Contract for Construction", 1st edition 1999 prepared by the Fédération Internationale des Ingénieurs-Conseils (FIDIC). These Conditions are subject to the variations and additions set out in Volume II. ii hereof entitled "Part B: Particular Conditions of Contract" (PCC).
	General Conditions of Contract
(amended)	**Conditions of Contract for Plant and Design-Build for Electrical and Mechanical Works and for Building and Engineering Works Designed by the Contractor: The Plant and Design-Build Contract, Part I shall be those forming Volume II.i of the General Conditions of Contract, First Edition 1999 prepared by the Fédération Internationale des Ingénieurs-Conseils (FIDIC).** These Conditions are subject to the variations and additions set out in Volume II. ii hereof entitled "Part B: Particular Conditions of Contract" (PCC).

VOLUME II.ii – Particular Conditions of Contract (GCC)

5	**Design**
para. 5.1 (original)	**General Design Obligations** Paragraph 5 The Contractor's Documents shall comprise the technical documents specified in the Employer's Requirements, documents required to satisfy all regulatory approvals, and the documents described in Appendix 7 to the Contract (List of Documents for Approval or Review). Unless otherwise stated in the Employer's Requirements, the Contractor's Documents related to Design Works shall be written in the language for communications defined in Clause 1.4 [Law and Language] and due to local law and regulations written also in language used in the country.
5	**Design**
para. 5.1 (amended)	**General Design Obligations** Paragraph 5 The Contractor's Documents shall comprise the technical documents specified in the Employer's Requirements, documents required to satisfy all regulatory approvals. Unless otherwise stated in the Employer's Requirements, the Contractor's Documents related to Design Works shall be written in the language for communications defined in Clause 1.4 [Law and Language] and due to local law and regulations written also in language used in the country.

03/12/18

8 **Commencement, Delays and Suspension**

para. 8.3 (original)

Programme

Add at the end of the Sub-Clause:

The form of the programme of performance of the Contract shall be

prepared due to critical path method (CPM) as a Contract Master Schedule (CMS) using Primavera SureTrack Programme, MS Project or other similar international recognised Programmes. The activities shall be definite, discrete and measurable work elements and shall be selected such they depict the full scope of the work including design phases, construction and commissioning and start-up of the facility.

The CMS shall clearly identify key milestone dates due to Time Schedule according to Volume II., Appendix 4. The level of detail shall be sufficient to break down the work scope into manageable and measurable activities acceptable to Engineer. The CMS shall be revised only with Engineer´s prior approval.

8 **Commencement, Delays and Suspension**

para. 8.3 (amended)

Add at the end of the Sub-Clause:

The form of the programme of performance of the Contract shall be prepared due to critical path method (CPM) as a Contract Master Schedule (CMS) using Primavera SureTrack Programme, MS Project or other similar international recognised Programmes. The activities shall be definite, discrete and measurable work elements and shall be selected such they depict the full scope of the work including design phases, construction and commissioning and start-up of the facility.

The CMS shall clearly identify key milestone dates due to **indicative Time Schedule presented below**. The level of detail shall be sufficient to break down the work scope into manageable and measurable activities acceptable to Engineer. The CMS shall be revised only with Engineer´s prior approval.

Scope of Work – WWTP	**Duration of activity***
1. Commencement day	
2. Preliminary design - idejni projekat [MS]	up to 90 days
3. Revision & Control of preliminary design	up to 30 days
4. EIA	up to 45 days
5. Building permit [MS]	up to 60 days
6. Main design - glavni projekat [MS]	up to 60 days
7. Revision & Control of main design	up to 30 days
8. Time for completion of construction works	up to 730 days
- Individual tests (complex tests)**	up to 7 days
- Management of Trial operations***	365 days
9. Defect Notification Period	550 days
10. Performance Certificate Preparation and Issuance	28 days
	Total up to 1623 days
* In cases where parallel activity is possible, contractor may work simultaneously on different activities.	
** 7 days are already included in 730 days.	
*** 365 days are already included in 730 days.	

03/12/18

18	**Insurance**
para. 18.5 (original)	**Professional Indemnity Insurance** The Contractor shall affect, by the Commencement Date, professional indemnity insurance which will cover the risks due to an Appendix 3 (Insurance Requirements) to Contract. The Contractor shall use his best endeavours to maintain the professional indemnity insurance in full force and effect until 10 years from the date stated in the Performance Certificate. The Contractor shall undertake to notify the Employer promptly of any difficulty in extending, renewing or reinstating this insurance
18	**Insurance**
para. 18.5 (amended)	**Professional Indemnity Insurance** The Contractor shall affect, by the Commencement Date, professional indemnity insurance according to Appendix to Tender. The Contractor shall use his best endeavours to maintain the professional indemnity insurance in full force and effect until 10 years from the date stated in the Performance Certificate. The Contractor shall undertake to notify the Employer promptly of any difficulty in extending, renewing or reinstating this insurance.

03/12/18

18	**Insurance**
para. 18.6 (original)	**Contractor's liability for Design Works** The Contractor shall effect and maintain, during the term of this Contract, at its sole expense, professional liability which shall cover all risks of professional negligence in Design Works and advertising injury insurance from a recognized insurance company in the amount and under condition due to an Appendix 3 (Insurance Requirements) to Contract. Such insurance shall name the Contractor individually as an additional named insured. The Contractor shall maintain the insurance policies required by this clause for the duration of the Contract and produce evidence of insurance, if requested. The Contractor undertakes to notify the Employer promptly of any difficulty in extending, renewing or reinstating this insurance. The insurance shall include also cover in respect of mitigation, rectification and re-design costs - if any. If the Contractor fails to submit or extend the validity of such insurance, the Employer is entitled to enter into or extend such insurance at the expense, risk and peril of the Contractor without any further written communication and offset this against any invoice issued by the Contractor.
18	**Insurance**
para. 18.6 (amended)	**Contractor's liability for Design Works** The Contractor shall effect and maintain, during the term of this Contract, at its sole expense, professional liability which shall cover all risks of professional negligence in Design Works and advertising injury insurance from a recognized insurance company in the amount and under condition due to an Appendix to Tender. Such insurance shall name the Contractor individually as an additional named insured. The Contractor shall maintain the insurance policies required by this clause for the duration of the Contract and produce evidence of insurance, if requested. The Contractor undertakes to notify the Employer promptly of any difficulty in extending, renewing or reinstating this insurance. The insurance shall include also cover in respect of mitigation, rectification and re-design costs - if any. If the Contractor fails to submit or extend the validity of such insurance, the Employer is entitled to enter into or extend such insurance at the expense, risk and peril of the Contractor without any further written communication and offset this against any invoice issued by the Contractor.

VOLUME II.ii – Appendix to Tender

Appendix to Tender is amended, and revised version of Appendix to Tender is attached to this Addendum (See Attachment 2 to Addendum No 3).

VOLUME II.iii – Contract Agreement

03/12/18

	Contract Agreement	
Appendices	Following Appendices were removed from the Contract Agreement	
	Appendix 1	Terms and Procedures of Payment
	Appendix 2	Price Adjustment
	Appendix 3	Insurance Requirements
	Appendix 4	Time Schedule
	Appendix 5	List of Subcontractors
	Appendix 6	Scope of Works and Supply by the Employer
	Appendix 7.	List of Documents for Approval or Review
	Appendix 8.	Operation and Maintenance Manuals

VOLUME III - The Requirements

iii.i	**Technical Specifications**
1.3 – (original)	This Tender documentation has been elaborated upon the following reference design documentations: 1. General design documents „Danilovgrad Wastewater Collection and Treatment". „Generalni projekat kanalisanja i prečišćavanja otpadnih voda Danilovgrada". Prepared by ENERGOPROJEKT-HIDROINŽENJERING ad, Novi Beograd, February 2008. 2. "Spatial urban plan of the Municipality of Danilovgrad". Prepared by CEP-Beograd, MonteCEP-Kotor, Planet Cluster-Madrid (Spain) from 2014. 3. Conceptual design „Danilovgrad Municipal Infrastructure, Danilograd WWTP". Prepared by VHS Brno, a.s., Brno, April 2014. Existing design documentations are available for consultation in the Employer's office at the following address: D.O.O. "Vodovod i kanalizacija" Danilovgrad Street Address: Caja Scepanovica bb City: Danilovgrad Postal Code: 81410 Country: State of Montenegro"

03/12/18

iii.i	**Technical Specifications**
1.3 – (amended)	Availability of Existing Documentation "This Tender documentation has been elaborated upon the following reference design documentations: 1. General design documents „Danilovgrad Wastewater Collection and Treatment". „Generalni projekat kanalisanja i prečišćavanja otpadnih voda Danilovgrada". Prepared by ENERGOPROJEKT-HIDROINŽENJERING ad, Novi Beograd, February 2008. 2. "Spatial urban plan of the Municipality of Danilovgrad". Prepared by CEP-Beograd, MonteCEP-Kotor, Planet Cluster-Madrid (Spain) from 2014. 3. Conceptual design „Danilovgrad Municipal Infrastructure, Danilograd WWTP". Prepared by VHS Brno, a.s., Brno, April 2014. Existing design documentations are part of the tender, and are attached herewith..

03/12/18

Attachment 1 to Addendum-3 to the Tender Document for Procurement of: Construction of Wastewater Plant

VOLUME I.viii

PRICE SCHEDULES

PREAMBLE

General

1. The price schedules are divided into separate schedules according to Clause 22.2 of ITT.

2. The Schedules do not generally give a full description of the Plant and Equipment to be supplied and the services to be performed under each item. Tenderers shall be deemed to have read the Technical Specifications and other volumes of the tender documents and to have reviewed the Drawings to ascertain the full scope of the requirements included in each item prior to filling in the rates and prices. The entered rates and prices shall be deemed to include for the full scope as aforesaid, including overheads and profit.

3. If tenderers are unclear or uncertain as to the scope of any item, they shall seek clarification in accordance with the Instructions to Tenderers in the tender documents prior to submitting their tender.

4. The Price Schedules shall be read in conjunction with the several documents forming the Contract including General Conditions of Contract, Conditions of Particular Application, Schedules, Appendices, Drawings, Annexures and Addendums.

5. The rates and prices entered in the priced Price Schedules according to Clause 22.3 of ITT shall, unless expressly stated otherwise in the Contract, include for the comprehensive costs of carryingout
the work in accordance with the requirements of the Contract including without limitation for all Contractor's Equipment, labor, materials, setting-out, trials, obtaining approvals, erection, Temporary Works, work of rectification, supervision, maintenance, insurance, profit, taxes and duties, together with the costs of all risks, liabilities and obligations that are set out in or can reasonably be inferred from the Contract and including the rectification of any defects during the Defect Liability Period.

6. A rate of unit price shall be entered against each item in the Price Schedules, weather quantities are stated or not. The cost of items against which Contractor has failed to enter a rate or price shall be deemed to be covered by other rates and prices entered in the Price Schedules.

7. The whole cost of complying with the previsions of the Contract shall be included in the items provided in the priced Price Schedules and where no items are provided the cost shall be deemed to be distributed among the rates and prices entered for the related items of work. References to the relevant sections of the contract documentation shall be made before entering rates or prices against each item in the Price Schedules.

8. The completed work based on measurement shall be approved in accordance with the following requirements due to actual quantity supplied or work done. The Project Manager shall agree or determine the value of those parts of works, which are to be measured. Measurement shall be made of the net actual quantities of those works notwithstanding local practice.

03/12/18

Wherever any Permanent Works are to measured by records, they shall be prepared by the Contractor. The Contractor shall examine and agree the records with the Project Manager.
Whenever the Project Manager requires any part of the Works to be re-measured, reasonable notice shall be given to the Contractor, who shall:

(i) promptly either attend or send another qualified representative to assist the Project Manager in making measurement, and
(ii) supply any particulars requested by the Engineer.

If the Contractor fails to attend or send a representative, the re-measurement made by (or on behalf of) the Project Manager shall be accepted as accurate.

Pricing

9. Prices shall be entered in indelible ink, and any alterations necessary due to errors etc. shall be initialled by the tenderer.
As specified in the Tender Data, prices shall be fixed and firm for the duration of the Contract, or prices shall be subject to adjustment in accordance Contract Agreement.

10. Tender prices shall be quoted in the manner indicated and in the currencies specified in the Instructions to Tenderers in the tender documents.

For each item, tenderers shall complete each appropriate column in the respective Schedules, giving the price breakdown as indicated in the Schedules.

Prices given in the Schedules for each item shall be for the scope covered by that item as detailed in the Technical Specifications, Drawings or elsewhere in the tender documents.

11. Where there are discrepancies between the total of the amounts in the column for the price breakdown and the amount in the column for the total price, the former shall prevail and the latter will be corrected accordingly.

Where there are discrepancies between the total of the amounts of Schedules 1 to 4 and the amount given in Schedule 5 (Grand Summary), prices will be adjusted in accordance with Paragraph 34. of the Instructions to Tenderers.

Where there are discrepancies between amounts stated in figures and amounts stated in words, the amounts stated in words shall prevail.

12. Payments will be made to the Contractor in the currency or currencies indicated under each respective item.

13. Items left blank will be deemed to have been included in prices for other items. The total for each schedule and the total of the Grand Summary shall be deemed to be the total price for executing the Facilities and sections thereof in complete accordance with the Contract, whether or not each individual item has been priced.

14. When requested by the Employer for the purposes of making payments or part payments, calculating variations or evaluating claims, or for such other purposes as the Employer may reasonably require, the Contractor shall provide the Employer with a breakdown of any composite or lump sum items included in the Schedules.

03/12/18

IFT Number ..... Schedule No. 1

SCHEDULE OF RATES AND PRICES

SCHEDULE NO.1 - PLANT AND EQUIPMENT, INCLUDING MANDATORY SPARE PARTS SUPPLIED FROM ABROAD

Name of tenderer _____ Page __of ___

Tender identification no. EBRD ME DAN 9000

Important note: Items detail specifications and description refer to Volume III - The Requirements, document III.i Technical Specifications.

Item	Description	Quantity	Unit price CIP (border)	Unit price (other INCOTERMS)	Total price per item (1x2) or (1x3)
		1	2	3	4
1	**Mechanical Part**				
1.1	Mechanical Treatment	1.0 set			
1.2	Biological Treatment	1.0 set			
1.3	Sludge Treatment	1.0 set			
1.4	Sludge Dewatering	1.0 set			
	Subtotal of Mechanical Part				
2	**Electrical Part**				
2.1	Transformer station	1.0 set			
2.2	Main supply distribution	1.0 set			
2.3	Heavy current distribution	1.0 set			
2.4	Instrumentation and Control (I&C)	1.0 set			
2.5	Automatic control of technological processes	1.0 set			
	Subtotal of Electrical Part				
				Total amount	

Signature of tenderer_____

Note:

1. In case of discrepancy between unit price and total, prices will be adjusted in accordance with Paragraph 33.3 of the Instructions to Tenderers.
2. Prices and currencies to be in accordance with Paragraphs 23 and 24 respectively of the Instructions to Tenderers.
3. Currencies are to be clearly specified in accordance with the Instructions to Tenderers.

03/12/18

SCHEDULE OF RATES AND PRICES

SCHEDULE No.2 - PLANT AND EQUIPMENT SUPPLIED FROM WITHIN THE EMPLOYER'S COUNTRY

Name of tenderer _____ Page __ of __

Tender identification no. EBRD ME DAN 9000

Important note: Items detail specifications and description refer to Volume III - The Requirements, document III.i Technical Specifications.

Item	Description	Quantity	Unit price EXW		Import duties and taxes on directly imported components	Total price per item (1x2)	
			Foreign *	Local *		Foreign * 1x2+4	Local * 1x3+4
		1	2	3	4	5	6
1	**Mechanical Part**						
1.1	Mechanical Treatment	1.0 set					
1.2	Biological Treatment	1.0 set					
1.3	Sludge Treatment	1.0 set					
1.4	Sludge Dewatering	1.0 set					
	Subtotal of Mechanical Part						
2	**Electrical Part**						
2.1	Transformer station	1.0 set					
2.2	Main supply distribution	1.0 set					
2.3	Heavy current distribution	1.0 set					
2.4	Instrumentation and Control (I&C)	1.0 set					
2.5	Automatic control of technological processes	1.0 set					
	Subtotal of Electrical Part						
					Total amount		

Signature of tenderer_____

Note:

1. In case of discrepancy between unit price and total, prices will be adjusted in accordance with Paragraph 33.3 of the Instructions to Tenderers.

03/12/18

2. Prices and currencies to be in accordance with Paragraphs 23 and 24 respectively of the Instructions to Tenderers.
3. Currencies are to be clearly specified in accordance with the Instructions to Tenderers.

03/12/18

SCHEDULE OF RATES AND PRICES

SCHEDULE No.3 - LOCAL TRANSPORTATION

Name of tenderer _____ Page __ of __

Tender identification no. EBRD ME DAN 9000

Important note: Items detail specifications and description refer to Volume III - The Requirements, document III.i Technical Specifications.

Item	Description	Quantity	Unit price*	Total price (1x2)
		1	2	3
1	**Mechanical Part**			
1.1	Mechanical Treatment	1.0 set		
1.2	Biological Treatment	1.0 set		
1.3	Sludge Treatment	1.0 set		
1.4	Sludge Dewatering	1.0 set		
	Subtotal of Mechanical Part			
2	**Electrical Part**			
2.1	Transformer station	1.0 set		
2.2	Main supply distribution	1.0 set		
2.3	Heavy current distribution	1.0 set		
2.4	Instrumentation and Control (I&C)	1.0 set		
2.5	Automatic control of technological processes	1.0 set		
	Subtotal of Electrical Part			
	TOTAL (TO GRAND SUMMARY)			

Signature of tenderer _____

*Specify currencies in accordance with the Instructions to Tenderers.

03/12/18

IFT Number .....

Schedule No.4
PAGE 4 OF 6

SCHEDULE OF RATES AND PRICES

SCHEDULE No.4 - INSTALLATION AND OTHER SERVICES

Name of tenderer _____ Page __ of __

Tender identification no. EBRD ME DAN 9000

Important note: Items detail specifications and description refer to Volume III - The Requirements, document III.i Technical Specifications.

			Unit price		Total price	Total price
Item	**Description**	**Quantity**	**Foreign Currency Portion***	**Local Currency Portion***	**Foreign* 1x2**	**Local* 1x3**
		1	**2**	**3**	**4**	**5**
1	**Mechanical Part**					
1.1	Mechanical Treatment	1.0 set				
1.2	Biological Treatment	1.0 set				
1.3	Sludge Treatment	1.0 set				
1.4	Sludge Dewatering	1.0 set				
	Subtotal of Mechanical Part					
2	**Electrical Part**					
2.1	Transformer station	1.0 set				
2.2	Main supply distribution	1.0 set				
2.3	Heavy current distribution	1.0 set				
2.4	Instrumentation and Control (I&C)	1.0 set				
2.5	Automatic control of technological processes	1.0 set				
	Subtotal of Electrical Part					
3	**Civil Part**					
3.1	Overflow/closing chamber	1.0 set				
3.2	Gravel trap, Coarse screens, Sewage collection tank	1.0 set				
3.3	Pumping station with overflow	1.0 set				
3.4	Fine mechanical pre-treatment	1.0 set				
3.5	Flow distribution structures	1.0 set				
3.6	Predenitricication tank	1.0 set				
3.7	Circulating activated sludge tank	1.0 set				
3.8	Final settling tank	1.0 set				
3.9	UV outflow desinfection structure	1.0 set				
3.10	Measuring flumes	1.0 set				
3.11	Return and excess activated sludge pumping station	1.0 set				
3.12	Dosing of phosphorus precipitant	1.0 set				
3.13	Blower house	1.0 set				

03/12/18

3.14	Operation building	1.0	set			
3.15	Garage	1.0	set			
3.16	Warehouse	1.0	set			
3.17	Aerobic stabilization tank	1.0	set			
3.18	Aerobic stabilised sludge mixed holding tank	1.0	set			
3.19	Building of aerobic sludge stabilization, mechanical sludge dewatering and thickening	1.0	set			
3.20	Dewatered sludge storage site	1.0	set			
3.21	Construction wiring	1.0	set			
3.22	Heating	1.0	set			
3.23	Sanitary system	1.0	set			
3.24	Air-conditioning system	1.0	set			
3.25	Water supply	1.0	set			
3.26	Transformer station	1.0	set			
3.27	Connecting piping and flumes	1.0	set			
3.28	Sludge piping	1.0	set			
3.29	Air piping	1.0	set			
3.30	Sewage system	1.0	set			
3.31	Cable lines	1.0	set			
3.32	Exterior lighting	1.0	set			
3.33	Communications and hard-surface areas	1.0	set			
3.34	Landscaping	1.0	set			
3.35	Fencing	1.0	set			
3.36	Other necessary objects	1.0	set			
	Subtotal of Civil Part					
8	Geodetic measurements	1.0	set			
9	Engineering-geological and Hydro-geological surveys	1.0	set			
10	Main design for building permit (for the entire project scope)	1.0	set			
11	Main design for the details for execution of works (Detail design - for the entire project scope)	1.0	set			
12	As-built drawings and documents	1.0	set			
13	Other documents	1.0	set			
14	Construction site equipment	1.0	set			
15	Information table	6.0	pc			
16	Commemorative tablet	1.0	pc			
17	Management of trial operation during 1 year, training of employees, testing and commissioning	1.0	set			
	TOTAL (TO GRAND SUMMARY)					

Signature of tenderer _____

*Specify currencies in accordance with the Instructions to Tenderers.

03/12/18

SCHEDULE OF RATES AND PRICES

SCHEDULE No. 5 - GRAND SUMMARY

Name of tenderer _____ Page __ of __

Tender identification no. EBRD ME DAN 9000

Item	Description	Total price Foreign Currency Portion*	Total price Local Currency Portion*
1	**TOTAL SCHEDULE No. 1 Plant and Equipment, including mandatory spare parts, supplied from abroad**		
2	**TOTAL SCHEDULE No. 2 Plant and Equipment, including mandatory spare parts, supplied from within the Employer's country**		
3	**TOTAL SCHEDULE No. 3 Local Transportation**		
4	**TOTAL SCHEDULE No. 4 Installation and other Services**		
	GRAND TOTAL (TO TENDER FORM)		

Signature of tenderer _____

*Specify currencies in accordance with the Instructions to Tenderers.

03/12/18

SCHEDULE OF RATES AND PRICES

SCHEDULE No.6 - RECOMMENDED SPARE PARTS

Name of tenderer _____ Page __ of __

Tender identification no. EBRD ME DAN 9000

			UNIT PRICE*		TOTAL
Item	Description	Qty.	From abroad (CIP)	From within Employer's country (EXW)	PRICE (1 x 2 x 3)
		1	2	3	4
				Total amount	

Signature of tenderer _____

* Specify currencies in accordance with the Instructions to Tenderers.

03/12/18

Important note:

In accordance with Preamble in the main folder (Volume I.vii – Price Schedules – Preamble) - unless implied otherwise from the description of items in the Price Schedules No. 1 to No. 5, the unit prices shall include costs of the following:

1 Establishment, maintenance, and winding-up of the storehouses, offices, and other facilities of the Contractor (including electricity fees, water and sewage charges, fees for printing, copying and consumable supplies, and telecommunication fees);
2 Detailed setting-out of the Work performed by the Contractor;
3 Setting-out of all utility services (incl. their connections, electricity, control and signal cables, grounding, and anticorrosion protection elements) by their operators and provision of necessary permits and approvals prior to the work commencement, including fees;
4 Technical survey of existing structures;
5 Geological survey;
6 Geodetic measurements;
7 Archaeological survey for the purpose of preservation of archaeological findings and sites assumed to be discovered within the construction site in question;
8 Traffic organisation project and its approval, including fees. Installation of temporary and restoration of permanent traffic signs, incl. relevant fees;
9 Construction flood protection plan, Emergency plan for leakage of substances hazardous for water, Work safety and health protection plan, Inspection and test plan, Plan of environmental protection for the construction duration, inc. negotiations and approvals;
10 Construction site plan documents, incl. negotiations with the operators of utility lines and equipment concerned, negotiations with the owners of estates concerned and conclusions of relevant contracts;
11 Provision of all necessary permits and opinions prior to the commencement of works and during the construction, incl. fees;
12 Purchase/procurement of all materials, accessories and auxiliary construction materials, regardless of the fact whether they are included in Schedules;
13 All measures taken in connection with excavation works (sheeting, sloping, groundwater pumping, monitoring bores, technical equipment maintenance, etc.) resulting from the engineering-geological and hydro-geological surveys performed;
14 Vertical and horizontal transfer of any materials and plant and equipment in any quantities (materials for incorporation of products, excavated soil, removed foundation and surface layers of hard-surface/unpaved roads and pavements, water pumped from trenches and foundation pits, etc.) within and outside the Site, incl. fees;
15 Loading/unloading and transport of demolished materials, debris to a landfill at any distance, incl. landfill fees;
16 Loading/unloading and transport of excessive soil to a landfill at any distance, incl. landfill fees;
17 Clearing rooms and debris removal during demolishing as well as construction works;
18 Pumping and clearing of spaces and removal of waste to a landfill at any distance, incl. landfill fees;
19 Transfer of materials to/from temporary dumping sites, incl. loading, unloading, and fees, and including establishment and maintenance of temporary dumping sites and restoring the temporary dumping sites to their original state (confirmed by the owner(s) of estates concerned);
20 Preparatory and finishing bricklaying works and other preparatory and auxiliary construction works related to the assembly of sanitary installation, air-conditioning system, construction wiring, technological equipment, fitting windows, doors and frames, etc.;
21 Delivery and assembly of all connections of piping of all materials (reducers, flanges, sleeves, etc.), delivery and assembly of connections of all piping lines (welds, sockets, couplers, flanges, etc.), incl. branches; watertight piping passages through walls of manholes, tanks, and chambers (manhole sockets, etc.). Piping connection at the border of the construction and technological deliveries.
22 Compacting of all piping and cabling beds, backfills, fills, and mounds – in 0.2-0.3m layers;

03/12/18

23 Auxiliary assembly materials (tubes, cable eyes, wall plugs, fasteners, marking material, warning signs, cable strips, cable bushings, etc.;
24 All auxiliary works such as construction of scaffoldings, supports, dykes, sheeting of foundation pits and trenches incl. the use of Larsen sheet piles, and their removal;
25 Installation of all products and equipment, accessories and auxiliary construction materials and works;
26 Loss money;
27 Temporary piping and cable connections, passages, bypasses, and pumping for the provision of the sewerage system operation during the construction and gradual putting new structures into operation, incl. preparatory works, provision of reserve power supply and its operation;
28 Furnishing, securing, lighting, and heating of workplaces, machinery, auxiliary equipment, mechanisation, scaffoldings, storage areas and spaces, and work huts of the Contractor;
29 Partial closure and use of public communications if necessary for the work execution, incl. fees;
30 Protection of adjoining or surrounding plots against contamination or damages, removal of contamination and damages;
31 Cleaning of roads as required by valid regulations, incl. waste disposal;
32 Installation and removal of any casing used for concreting, incl. casing material supply, reinforcement in reinforced-concrete structures acc. to structural analyses and bending schedules of the Contractor;
33 Delivery, assembly, and disassembly of all parts of the temporary Work;
34 Delivery and assembly of all parts of the permanent Work, incl. connection, testing, and activation of technological equipment;
35 Establishment of temporary access roads, diversions, temporary road widening, bridging of trenches;
36 Temporary diversion of water courses incl. installation and removal of temporary dykes made of any material and piping used for this purpose;
37 Pumping of groundwater from trenches and foundation pits during the construction, incl. temporary piping and cabling connections, passages, bypasses (building, usage and removal), incl. preparatory works, provision of reserve power supply and its operation, obtaining permission and fees for discharging and possible treatment as specified by valid legislation, and incl. provision of reserve power supply and its operation;
38 Protective measures for the work executed and equipment delivered until their acceptance by the Employer;
39 Completion of the civil and building works and technological works (plant) incl. revisions, connection and activation, control measurements and adjustment of equipment, heating tests, etc.;
40 Obtaining approvals of concerned authorities and state organisations required for putting the Work into operation;
41 Elaboration of an individual (pre-commissioning) and complex (commissioning) test schedule and execution of all tests, monitoring, inspections, certificates, and revisions, incl. provision of media, connection, bleeding, filling the piping, etc., incl. preparatory works;
42 Removal of construction material from the structures built, and piping flushing and disinfection if required;
43 Works performed as resulting from the requirements of organisations and state authorities concerned;
44 General risks such as aggravated excavation conditions, adhesiveness, aggravated transport conditions, local influences, operational influences, necessary additional surveys (if executed);
45 All labour costs, taxes, Contractor's supervision, benefits, non-residence allowances, travel allowances, and expenditures;
46 Provision of compliance with requirements related to the occupational safety and health protection (poling boxes, planks, laths, ladders, securing trenches, protective gloves, helmets, footwear, etc.);
47 Elaboration and Provision of compliance with requirements related to the environmental protection and waste disposal including communication cleaning;

03/12/18

48 Provision of compliance with requirements of the quality management system;
49 Provision of compliance with requirements of road and traffic authorities (purchase/leasing, installation, and maintenance of traffic signs, railings, lighting of trenches, restoration of permanent traffic signs, etc.), incl. traffic organisation project and its approval, incl., fees;
50 All basic and secondary costs or overhead costs necessary for perfect and complex execution of works;
51 All secondary or overhead costs necessary for perfect and complex execution of works;
52 All Temporary Works not specified in the Schedules (e.g. temporary diversions, bridging trenches with light or heavy structures, repair of local communications, bridges, country lanes, and estates damaged by construction activities, re-laying bus stops, temporary access roads, etc.);
53 Loading/unloading, transport and disposal of waste, incl. all fees;
54 Expenses resulting from compensation agreements submitted by the Employer;
55 Elaboration of a plan of individual and complex tests;
56 Elaboration of a plan of training and a schedule of the beginning of activities into trial operation;
57 Training of personnel;
58 Passport of existing access roads which could be damaged or affected by the work activities of the Contractor during the construction;
59 Basic Design and Detail Design within the scope specified in Volume II.ii, incl. complete engineering activities and procurement of all necessary permits;
60 Production (works) documentation, incl. provision of necessary approvals and opinions of organisations and state authorities concerned;
61 As-built Documents including laying-out and geodetic plans for the purpose of inclusion into the cadastre within the scope specified in Volume II.ii;
62 Operation manuals during the construction, for early use of construction parts and for trial and permanent operation;
63 Elaboration of methodical instructions for the trial operation control and methodical management and evaluation of trial operation.

Items will be completed in accordance with specific design of the Contractor.

03/12/18

Attachment 2 to Addendum-3 to the Tender Document for Procurement of: Construction of Wastewater Plant

Volume II.ii

Appendix to Tender

Conditions	Sub-Clause	Data
Employer's name and address	1.1.2.2 & 1.3	D.O.O. "Vodovod i kanalizacija" Danilovgrad Caja Scepanovica bb Danilovgrad, 81410 State of Montenegro
Contractor's name and address	1.1.2.3 & 1.3	< *To be inserted by the Tenderer* >
Engineer's name and address	1.1.2.4 & 1.3	**VHS Brno, a.s.** Masná 102 602 00 Brno Czech Republic
Bank's name	1.1.2.11	**European Bank for Reconstruction and Development** One Exchange Square London EC2A 2JN United Kingdom
Borrower's name	1.1.2.12	**Ministry of Finance of Montenegro** Stanka Dragojevica br. 2 81000 Podgorica State of Montenegro
Time for Completion	1.1.3.3	1045 days
Defects Notification Period	1.1.3.7	550 days
Electronic transmission systems	1.3	Fax and E-mails. E-mails to be confirmed in writing
Governing Law	1.4	Law of the Montenegro
Ruling language	1.4	English
Language for communications	1.4	Montenegrin and English
Time for access to the Site	2.1	Access to site: On commencement Date Possession of site: 1 day after obtaining building permit

03/12/10

Engineer's Duties and Authority	3.1(b)(ii)	Variations resulting in an increase of the Accepted Contract Amount shall require approval of the Employer
Performance Security	4.2	The performance security will be in the form of a demand guarantee in the amount of 10 % of the Accepted Contract Amount and in the same currency of the Accepted Contract Amount
Delay Damages for the Works	8.7	0,1 % of the final Contract Price per day
Maximum amount of Delay Damages	8.7	10 % of the final Contract Price
Adjustments for Changes in Cost	13.8	N/A
Total Advance payment	14.2	20 % Percentage of the Accepted Contract Amount payable in the currencies and proportions in which the Accepted Contract Amount is payable
Number and timing of instalments	14.2	One instalment after receipt of the Advance payment guarantee by the Employer.
Currencies and proportions	14.2	The advance payment shall be paid in the currency in which the Accepted Contract Amount is payable to the Contractor according to Sub-Clause 14.15
Start repayment of Advance payment	14.2 (a)	When payments reach 20 % of the Accepted Contract Amount less Provisional Sums
Repayment amortisation rate of advance payment	14.2 (b)	25 %
Percentage of Retention	14.3	10 %
Limit of Retention Money	14.3	10 % of the Accepted Contract Amount
Minimum Amount of Interim Payment Certificates	14.6	500,000.00 EURO
Currency/Currencies of Payment	14.15	The Contract Price shall be paid in EURO
Periods for submission of insurance:	18.1	
a. evidence of insurance		7 days
b. relevant policies		28 days
Maximum amount of deductibles for insurance of the Employer's risks	18.2 (d)	5,000.00 EURO
Minimum amount of third party insurance	18.3	100,000.00 EURO per occurrence with the number of occurrences unlimited
Maximum amount of deductibles for Professional Indemnity Insurance	18.5	5,000.00 URO

03/12/18

Minimum amount of Insurance for Professional Indemnity Insurance	18.5	200,000.00 EURO
Maximum amount of deductibles for Professional Indemnity Insurance for Design Works	18.6	10,000.00 EURO
Minimum amount of Insurance for Professional Indemnity for Design Works	18.6	50,000.00 EURO
Appointment of DAB shall be by the date	20.2	60 days after a Party gives notice to the other Party of its intention to refer a dispute to a DAB in accordance with Sub-Clause 20.4
The DAB shall be comprised of	20.2	Three Members
Appointment (if not agreed) to be made by	20.3	The President of FIDIC or a person appointed by the President
Place of arbitration	20.6 (a)	The place of arbitration shall be Podgorica
Language of arbitration	20.6.	English

03/12/18

Particular Conditions of Contract (PCC)

The following Particular Conditions of Contract shall supplement the GCC. Whenever there is a conflict, the provisions herein shall prevail over those in the GCC.

1. General Provisions

1.1 Definitions

1.1.1 The Contract

1.1.1.5 Substitute the word "specification" with the word "Specification" in this Sub-Clause

1.1.2 Parties and Persons

Add the following:

1.1.2.11 "Bank" means the financing institution named in the *Appendix To Tender*

1.1.2.12 "Borrower" means the person named as the borrower in the *Appendix To Tender*

1.1.2.13 "Project Manager" means the person appointed by the Employer who represents and acts for the Employer at all times during the period of the Contract

1.1.4 Money and Payments

1.1.4.1 Replace the original text by the following: "Accepted Contract Amount" means the "Tender Price" as accepted in the Letter of Acceptance.

1.1.5 Works and Goods

Add the following:

1.1.5.9 "Facilities" means works

1.1.6. Other Definitions

1.1.6.2 Delete the text of Sub-Clause and replace with: "Country" means State of Montenegro, where the Site is located and where the Permanent Works are to be executed.

1.1.6.3 Subject to prior notification, the Employer's Equipment may include items owned by other entities in the Country.

1.1.6.5 Delete the text of Sub-Clause and replace with: "Law" means all legislation, statues, ordinances and other laws and regulations and by-laws of any legally constituted public authority applicable in the State of Montenegro.

1.1.6.7 Add to the end of the sentence:
"Site means the lands and other places where in the Works are proposed to be constructed whether through, upon, underneath, or inside such lands and places and shall also comprise lands and other places furnished by the Employer for the execution of this Contract. It also comprise any other place mentioned or designated in the Contract as

03/12/2018

a part of the Site in accordance with any coordination made with municipal and official authorities, as well as any other place which may be agreed upon by the two parties to form part of the Site during the execution of the Works; the site may be a road course, or public or private land which is not the property of the Employer. The Contractor shall not carry out works thereon, without first obtaining a permit and coordinating with the relevant authorities, with the assistance and knowledge of the Employer"

1.1.6.10 "Notice of Dissatisfaction" means the notice given by either Party to the other under Sub-Clause 20.4 [Obtaining Dispute Adjudication Board's Decision] indicating its dissatisfaction and intention to commence arbitration.

1.2 Interpretation

Add at the end of the Sub-Clause:

In these Conditions, provisions including the expression "Cost plus profit" require this profit to be one-twentieth (5%) of this Cost.

1.5 Priority of Documents

Remove the list of documents from (a) to (h) and substitute:

The order of priority shall be as set forth in the Contract Agreement.

1.6 Contract Agreement

Add at the end of the Sub-Clause:

The Parties shall enter into a Contract Agreement based upon the form given in Volume II, Contract Agreement, and within the period of the tender validity.

The Contract becomes effective on the date of signature by the Contractor.

Charges (if any) imposed by the Law in connection with entry into the Contract Agreement shall be borne by the Contractor.

1.12 Confidential Details

Replace Sub-Clause:

The Contractor's and the Employer's Personnel shall disclose all such confidential and *other information* as may be reasonably required in order to verify the Contractor's compliance with the Contract and allow its proper implementation.

Each of them shall treat the details of the Contract as private and confidential, except to the extent necessary to carry out their

03/12/18

respective obligations under the Contract or to comply with applicable Laws. Each of them shall not publish or disclose any particulars of the Works prepared by the other Party without the previous agreement of the other Party. However, the Contractor shall be permitted to disclose any publicly available information, or information otherwise required to establish his qualifications to compete for other projects.

1.13 Compliance with Laws

Add at the end of the Sub-Clause:

If changed or new applicable Laws or standards come into force in the country after the Base Date, the Contractor shall give notice to the Engineer and (if appropriate) submit proposals for compliance. In the event that:

a) the Engineer determines that compliance is required, and
b) the proposals for compliance constitute a Variation,

then the Engineer shall initiate a Variation in accordance with Clause 13 [Variations and Adjustments].

1.14 Joint and Several Liability

Add at the end of the Sub-Clause:

d) The lead partner shall be authorised to receive instructions for and on behalf of all partners, individually and collectively, and the lead partner shall be responsible for execution of the contract including payments.
e) The lead partner shall perform not less than 40% of the value of the works by his own personnel and equipment.
f) The composition or the constitution of the joint-venture shall not be altered without prior consent of the Employer.

1.15 Inspections and Audit by the Bank

The Contractor shall permit the Bank and/or persons appointed by the Bank to inspect the Site and/or the Contractor's (including its suppliers, subsuppliers, subcontractors, consultants or subconsultants) accounts and records relating to the performance of the Contract and to have such accounts and records audited by auditors appointed by the Bank if required by the Bank.
The Contractor shall maintain all documents and records related to the Contract in accordance with applicable law but in any case for at least six years from the date of substantial performance of the Contract.
The Contractor shall provide any documents necessary for the investigation of allegations of Prohibited Practices and require its employees or agents with knowledge of the Contract to respond to questions from the Bank.

2 The Employer

2.2 Permits, Licences or Approvals

Replace Sub-Clause b) with following:

03/12/2018

b)
(i) General permits concerning the works required from relevant national or local authorities shall be obtained by the Contractor after providing all necessary documentation due to Clause 5. [Design]. Such permits inter alia permits for traffic diversions, route permits, permits for radio communication, and permits for relocation of public utilities etc. The Employer and the Contractor together shall draw up a schedule for the submission of fully documented requests for permits to carry out the works. The cost of any delays suffered by the Contractor due to the late issue of any permits referred to in this paragraph to carry out the works, shall be borne by the Contractor himself if the delay is due to the Contractor or to delivering authorities,

(ii) The Contractor shall comply with the requirements of such permits described in this sub-clause and shall give the issuing authority full opportunity to inspect and examine the Works. Furthermore, he shall allow the authority to participate in testing and checking procedures, which shall not relieve the Contractor of any of his responsibilities under the Contract.

Add at the end of the Sub-Clause:

c) If the Project Manager is not named in the Contract, then within fourteen (14) days of the Effective Date, the Employer shall appoint and notify the Contractor in writing of the name of the Project Manager. The Employer may from time to time appoint some other person as the Project Manager in place of the person previously so appointed, and shall give a notice of the name of such other person to the Contractor without delay. No such appointment shall be made at such a time or in such a manner as to impede the progress of work on the Facilities. Such appointment shall only take effect upon receipt of such notice by the Contractor. The Project Manager shall represent and act for the Employer at all times during the period of the Contract. All notices, instructions, orders, certificates, approvals and all other communications under the Contract shall be given by the Project Manager, except as herein otherwise provided. All notices, instructions, information and other communications given by the Contractor to the Employer under the Contract shall be given to the Project Manager, except as herein otherwise provided"

2.4 Employer's Financial Arrangements

Add at the end of the Sub-Clause:

In addition, if the Bank has notified to the Borrower that the Bank has suspended disbursements under its loan, which finances in whole or in part the execution of the Works, the Employer shall give notice of such suspension to the Contractor with detailed particulars, including the date of such notification, with a copy to the Engineer, within 7 days of the Borrower having received the suspension notification from the Bank. If alternative funds will be available in appropriate currencies to the Employer to continue making payments to the Contractor beyond a date 60 days after the date of Bank notification

03/12/18

of the suspension, the Employer shall provide reasonable evidence in his notice of the extent to which such funds will be available.

3 The Engineer

3.1 Engineer's Duties and Authority

Add at the end of the Sub-Clause:

(d) any act by the Engineer in response to a Contractor's request except as otherwise expressly specified shall be notified in writing to the Contractor within 28 days of receipt.

The following provisions shall apply:

The Engineer shall obtain the specific approval of the Employer before taking action under the-following Sub-Clauses of these Conditions:

(a) Sub-Clause 4.12: Agreeing or determining an extension of time and/or additional cost.

(b) Sub-Clause 13.1: Instructing a Variation, except;

(i) in an emergency situation as determined by the Engineer, or

(ii) if such a Variation would increase the Accepted Contract Amount by more than the percentage specified in the *Appendix To Tender*

(c) Sub-Clause 13.3: Approving a proposal for Variation submitted by the Contractor in accordance with Sub Clause 13.1 or 13.2.

(d) Sub-Clause 13.4: Specifying the amount payable in each of the applicable currencies

Notwithstanding the obligation, as set out above, to obtain approval, if, in the opinion of the Engineer, an emergency occurs affecting the safety of life or of the Works or of adjoining property, he may, without relieving the Contractor of any of his duties and responsibility under the Contract, instruct the Contractor to execute all such work or to do all such things as may, in the opinion of the Engineer, be necessary to abate or reduce the risk. The Contractor shall forthwith comply, despite the absence of approval of the Employer, with any such instruction of the Engineer. The Engineer shall determine an addition to the Contract Price, in respect of such instruction, in accordance with Clause 13 and shall notify the Contractor accordingly, with a copy to the Employer.

3.4 Replacement of the Engineer

Replace Sub-Clause:

If the Employer intends to replace the Engineer, the Employer shall, not less than 21 days before the intended date of replacement, give notice to the Contractor of the name, address and relevant experience

03/12/2018

of the intended replacement Engineer. If the Contractor considers the intended replacement Engineer to be unsuitable, he has the right to raise objection against him by notice to the Employer, with supporting particulars, and the Employer shall give full and fair consideration to this objection.

4 The Contractor

4.1 Contractor's General Obligations

Add at the end of the Sub-Clause:

The Contractor is obliged to carry out this Contract in accordance with provisions of Building Law and respective By-Laws which are in force in Montenegro. Among other requirements, the Contractor shall obtain a certified licence issued in Montenegro before executing the Works under this Contract.
Foreign companies, prior to execution of any work, must register their branch offices in Montenegro (original Montenegrin wording: "dio stranog društva - d.s.d.") and shall submit its registration to the Engineer.

The Contractor shall provide on Site at his own expense water, electricity, telephone and all other plant and fees required to execute the Works. Where main supplies are not available in Site, the Contractor shall provide a generator with suitable capacity, and water tanks of suitable sizes and with the required petrol, diesel or gas for their operation.

The Contractor shall provide every assistance to the Engineer and his staff in carrying out their duties and shall provide personnel to assist the checking, testing, sampling, setting out, levelling, and measurement of the works together with a sufficient supply of pegs, poles, paint, line levels and other materials and small tools required for the checking, setting out and measurement of the Works.

The Contractor shall also provide for the Engineer and his staff such waterproof clothing, safety helmets, rubber boots, lights and the like as may reasonably be required by them. These articles shall remain the property of the Contractor, and shall be repaired and replaced by him to the extent necessitated by fair wear and tear.

The costs for the above assistance shall be included in the Contract Price.

4.2 Performance Security

Replace the second paragraph of this Sub-Clause:

The Contractor shall deliver the Performance Security to the Employer by the Commencement Date and shall send a copy to the Engineer.
The Performance Security shall be issued by a reputable bank or financial institution selected by the Contractor, and shall be in the

form annexed to the Particular Conditions, as stipulated by the Employer in the Contract Data, or in another form approved by.

4.3 Contractor's Representative

Add at the end of the Sub-Clause:

If the Contractor's Representative, Site Managers, Designer and Land Surveyor are not fluent in the said language, the Contractor shall make competent interpreters available during all working hours in a number deemed sufficient by the Engineer.

4.4 Subcontractors

Add at the end of the Sub-Clause:

Add at the end of item b): "The Engineer's consent shall be given within 14 days."

Add at the end of the Sub-Clause:

The Contractor shall ensure that the requirements imposed on the Contractor by Sub-Clause 1.12 [Confidential Details] apply equally to each Subcontractor.

Where practicable, the Contractor shall give fair and reasonable opportunity for contractors from the Country to be appointed as Subcontractors or to employ locally acquired staff to the greates possible extent. However, the total aggregate value of work subcontracted shall not exceed the amount stated in the Tender.

Subcontractors are obliged to carry out parts of the Works in accordance with provisions of Building Law and respective By-Laws which are in force in Montenegro. Among other requirements, Subcontractors shall obtain certified licences issued in Montenegro before executing the Works under this Contract. Foreign companies, prior to execution of any work, must register their branch offices in Montenegro (original Montenegrin wording: "dio stranog društva - d.s.d.") and shall submit their registration to the Engineer.

The maximum amount of work to be carried out by Subcontractors is limited to **30%**.

The Engineer may withdraw his consent whenever the work done by a Subcontractor does not comply with the Contract.

4.7 Setting Out

After the first paragraph add:
Throughout the execution of the Works, the Contractor shall continuously keep an experienced surveyor on the site to perform and/or supervise the setting out and other survey work. The instruments used by the Contractor shall be of a make and type suitable for the tasks to be performed and faultless in technical condition and adjustment. They shall be subject to approval by the

03/12/2018

Engineer. The Engineer may check the setting out at any stage and the Contractor shall keep site books, plans and other records to facilitate such checks.

The Contractor shall provide at his own cost geodetic measurements of all related Works. The drawings shall be handed over in three (3) paper copies and two (3) pieces on CD. The geodetic measurements shall be performed by licensed engineer. The geodetic measurements, technical documentation and execution of the geodetic works shall be provide in accordance to Zakon o državnom premjeru i katastru nepokretnosti (Sl. list CG, br. 29/07, 73/10, 32/11, 40/11, 43/15) (eng. Law on State Surveying and Cadastre of immovable property).

4.8 Safety procedures

Add the following sub-paragraphs:

(f) Comply with all safety regulations and 'Permit to Work' systems in accordance with the relevant laws and by laws in force in Montenegro and the **Safety Assessment Plan**. Safety issues shall be on the agenda of all site meetings and plans shall be jointly agreed between the Engineer and the Contractor's Representative for minimising the risks of unsafe events and working practices in forthcoming work;

(g) The Site shall be a "hard hat" site and safety hats shall be worn at all times;

(h) Comply with all applicable current legislation, regulations and specifications, with respect to all measures, operations and administrative steps required for the full protection and safeguarding of the environment;

(i) Be responsible for the proper disposal of all solid and fluid waste from all places within the Site and shall comply strictly with the regulations of the relevant authorities;

(j) The excavations shall comply with all safety and with standard ground disturbance / excavation entry permit to work.

(k) The Contractor must comply with all the Environmental, Social, Health and Safety regulations provided by the Plan.

4.10 Site Data

Add at the end of the Sub-Clause:

If the information from the Employer is available only in the language of the Country, the Contractor shall provide the necessary translation for his interpreting and use of the information.

4.12 Unforeseeable Physical Conditions

Add at the end of the Sub-Clause:

Neither geological nor geotechnical investigation has been carried out by the Employer.

Information derived from the Specification and any other pertinent document will not relieve the Contractor from any risk, or from

03/12/18

properly making additional investigations, such as soil investigations, as he may elect, or from properly fulfilling all the terms of the Contract.

The submission of a Tender shall be conclusive evidence that the Tenderer has investigated and is satisfied as to the conditions encountered, as to the character, quality, and quantity of work to be performed, and the materials to be furnished, and as to the requirements of the Contract.

4.14 Avoidance of Interference

After item b) add the following item c):

"c) where closure of a public road is required under the Contract, the approval of the responsible authority is required before such closure can take place. The Contractor shall provide the responsible authority, not less than 14 days before the planned closure of the road, his proposal on how the work shall be undertaken, public traffic will be detoured, and the time for its completion. The Engineer shall approve the Contractor's proposal, or seek amendments in order to ensure compliance with this Sub-Clause and local regulations.

4.18 Protection of the Environment

Add at the end of the Sub-Clause:

The Contractor shall comply with all applicable Laws of the Country with respect to all measures, operations and administrative steps required for the full protection and safeguarding of the environment including sewage disposal, waste disposal, air pollution, noise reduction and nuisance, fire fighting precautions.

The Contractor shall not release, or permit to be released into the air, water and land area at or in the vicinity of the site any toxic or harmful effluent or substance, and shall indemnify the Employer against any claims or liability arising from any breach of this obligation.

4.21 Progress Reports

Add at the end of the Sub-Clause:

i) Engineer's representative and Contractor shall meet at times scheduled by the Engineer on a weekly basis to discuss the status of Contractor's performance of this contract. This weekly Progress Meetings shall be attended by Contractor's representative and representatives of the Employer.

The agenda for such meetings shall cover a review of progress attained, a review of schedules and plants for future activities, the status of staffing, engineering, safety, equipment, material, supply, payments, current and anticipated difficulties, interface with other contractors, claims and other pertinent topics. The minutes of the meetings shall be prepared by Engineer and shall be issued to all

03/12/18

parties within three (3) days after the meeting for previous clarifications by electronic means.

Further ad-hoc meetings will be held if needed. Time and place of these meetings shall be mutually agreed taking into consideration the subject to be discussed.

4.23 Contractor's Operations on Site

Add at the end of the Sub-Clause:

No important operation of any kind, especially cutting through or closing existing roads, work adjacent to public utilities shall be carried out without the written consent of the Engineer. The Contractor shall apply to the Engineer in writing for such consent at least 14 days prior to the proposed start of such operations. He shall include with the application full details of the operation, the programme, together with the major items of Plant to be employed and also enclose copies of all necessary permits obtained in accordance with Sub-Clause 1.13.

4.24 Fossils

Add at the end of the Sub-Clause:

In accordance with Montenegrin Law any items found are the property of Montenegro. The Contractor shall pass over any items to the Montenegrin authorities as directed by the Engineer.

4.25 Existing Services

Add new Clause:

The Contractor shall acquaint himself with the position of all existing services such as sewerage, water supply, telecommunications, electricity, gas and the like before any excavation or other work likely to affect those services is commenced. Prior to commencement of the Works the Contractor shall request in writing the owners or operators of all buried services to locate these services.
The Contractor shall be liable for any damage of any kind caused by him or his Subcontractors in the execution of the Works, and must make good such damage at his own expense and to the satisfaction of the Engineer. The Contractor is required to make all necessary arrangements with and fulfil the requirements of the relevant local authorities and owners/operators for the removal, diversion or reinstatement of all services as agreed with or instructed by the Engineer. The costs of these works shall be borne by the Contractor.

4.26 Site Diary

Add new Clause:

03/12/18

The Contractor shall be responsible for keeping his construction documentation on Site in accordance with the Montenegrin Building Act.

The Contractor shall be inter alia responsible for keeping a Site Diary on Site which shall contain day-to-day information about the operations carried out by the Contractor. Entries into the Site Diary shall be made on a daily basis by the Contractor including all important data on the work carried out and the progress made, data on the Contractor's Personnel, Plant and Machinery employed by the Contractor, observations made by the Contractor and alike.
The Site Diary shall be made in at least two copies of which one copy shall be made available to the Engineer at the end of every day.

However, entries into the Site Diary do not relieve the Parties and the Engineer from complying with the requirements of Sub-Clause 1.3 [Communications].

4.27 Technical Standards and Regulations

Add new Clause:

The Contractor's Design, the Contractor's Documents, the execution and the completed Works shall comply with the Technical Standards of the European Community (EN) as well as with the standards, building and environmental laws applicable in Montenegro and other standards specified in the Specification, applicable to the Works, or defined by the applicable Law.

The Law shall, in respect of the Works, be that prevailing when the Works are taken over by the Employer under Clause 10 [Employer's Taking Over]. References in the Contract to published standards shall be understood to be references to the edition applicable on the Base Date, unless stated otherwise.

If changed or new applicable Law or standards come into force in the Country after the Base Date, the Contractor shall give notice to the Engineer and (if appropriate) submit proposals for compliance. In the event that:

a) The Engineer determines that compliance is required, and
b) The proposals for compliance constitute a Variation, then the Engineer shall initiate a Variation in accordance with Clause 13 [Variations and Adjustments].

5 Design

5.1 General Design Obligations

Add new Sub-Clause:

The Contractor must ensure that all Design Works and Documents shall be designed to comply with all relevant rules and regulations, especially with a Zakon o uredenju prostora i izgradnji objekata (Sl. List CG, br. 51/08, 40/10, 34/11, 40/11, 47/11, 35/13, 39/13, 33/14)

03/12/18

of Montenegro (eng. Law on Spatial development and construction of structures) of Montenegro and Pravilnik o načinu izrade, razmjeri i bližoj sadržini tehničke dokumentacije (Sl.List CG, br. 23/14, 32/15, 75/15) (eng. Rules on the method of preparation, the scale and the immediate contents of the technical documentation), inter alia due to regulations of Clause 5 - Authority's approval (upotrebna dozvola) and all relevant and valid Amendments on this Law.

Design Works shall be prepared by qualified designers who are engineers or other professionals who comply with the criteria stated in the Employer's Requirements. Unless otherwise stated in the Contract, the Contractor shall submit to the Project Manager for consent the name and particulars of each proposed designer and design Subcontractors. All designers shall have a valid licence for Design Works in accordance with Law of Montenegro.

Designers shall be permitted to engage and/or use third party designers or other service providers as independent Contractors in connection with the Services ("Design Subcontractors"). Notwithstanding, Contractor shall remain fully responsible for such Design Subcontractors compliance with the terms and conditions of this Contract.

The Contractor warrants that he, his designers and design Subcontractors have the experience and capability necessary for the required Design Works. The Contractor undertakes that the designers shall be available to attend discussions with the Project Manager at all reasonable times, until the expiry date of the relevant Defects Notification Period.

The Contractor's Documents shall comprise the technical documents specified in the Employer's Requirements, documents required to satisfy all regulatory approvals, and the documents described in Appendix 7 to the Contract (List of Documents for Approval or Review). Unless otherwise stated in the Employer's Requirements, the Contractor's Documents related to Design Works shall be written in the language for communications defined in Clause 1.4 [Law and Language] and due to local law and regulations written also in language used in the country.

Sheet sizes shall be in accordance with international sizes unless otherwise agreed by the Project Manager. The choice of scale will depend on the kind of drawings and/or details to be presented.
The entire Works shall be designed and constructed in the metric system. Drawings, components, dimensions and calibrations shall be in metric system and the units adopted shall be generally in accordance with the International System of Units.

All submitted drawings and calculations shall be clearly rubber stamped as "DRAWINGS FOR APPROVAL". The final version of drawings and documents after check out and approval by Project Manager will be stamped as "APPROVED DRAWINGS".

l 03/12/18

Revision of the Design Works and EIA procedure will be done by in accordance with the Montenegrin legislation. Revised design and EIA are preconditions for obtaining of building permit.

5.2 Contractor´s Documents

Add new Sub-Clauses as following:

Preliminary Design Drawings (Idejni projekat)

Based on Employer´s and relevant authorities approved preliminary study/study Contractor shall prepare Preliminary Design Drawings (Idejni Projekat) so that specification, scope and details based on Pravilnik o načinu izrade, razmjeri i bližoj sadržini tehničke dokumentacije (Sl. List CG, br. 23/14, 32/15) (eng. Rules on the method of preparation, the scale and the immediate contents of the technical documentation) with respect to the general technical requirements for construction and other applicable and related legislative and administrative regulations and standards in Montenegro.

Prior to submission of Preliminary Design to local authorities, Contractor submits two (2) copies of documentation to Employer to obtain his written approval.
The Contractor shall discuss Preliminary Design with the all relevant local authorities as well as Audit Company to obtain their approval and construction permit (Gradjelinska dozvola).

In the event that with regard to the requirements of local authorities or other entities it will be necessary to divide related drawings and documentation to more parts or approval procedure will require more construction permits, these shall be provide by the Contractor without affecting the time for completion and contract price.

Preliminary Design Drawings shall be handed over in six (6) copies in paper form and on a data carrier two (2) pcs CD in standard formats MS Office and / or AutoCAD, version min. 2010 y.

Main Design Drawings (Glavni projekat)

On the basis on Preliminary Design Drawings the Contractor shall prepare project documentation for building construction in a form of Main Design Drawings (Glavni projekat) so that breakdown, scope and details based on Pravilnik o načinu izrade, razmjeri i bližoj sadržini tehničke dokumentacije (Sl.List CG, br. 23/14, 32/15) (eng. Rules on the method of preparation, the scale and the immediate contents of the technical documentation) in compliance with the general requirements for construction, and other applicable and related legislative and administrative provisions in force, and binding technical standards and regulations in Montenegro.

The Main Design Drawings shall reflect the requirements of the related authorities issued by a valid construction permit and all from Employer required design changes, generally applicable technical mandatory or recommended standards for the construction with

03/12/18

regard to the construction and technical and use properties of materials used, especially with regard to the efficient lifetime operation.

Each design documentation shall bear a serial number and any changes in the drawings shall be indexed "1 - n", describing the changes, the date of its execution and the signature of the Designer. The Contractor shall maintain and update records of all project drawings, which will be available at the Project Manager.

The Main Design Drawings shall be presented to the Employer in six (6) hard copies and three (3) copies on CD media data in DWG format (DXF), PDF, and Excel. Any extra copy of technical or other documentation must be pre-approved by Project Manager.

5.4 Technical Standards and Regulations

Add new Sub-Clause:

The Design Works and the Contractor's Documents shall comply with the technical standards BS, BS:CP, and DIN, building, construction and environmental Laws and other standards specified in Employer's Requirements, applicable to the Design Works, or defined by the applicable Pravilnik o načinu izrade, razmjeri i bližoj sadržini tehničke dokumentacije (Sl.List CG, br. 23/14, 32/15) (eng. Rules on the method of preparation, the scale and the immediate contents of the technical documentation).

If necessary equivalent National Standards may be substituted for the Standards referred to in the Specifications provided, the Contractor shall have justified such substitution to the Project Manager and only after written approval has been received from the Project Manager.

The Contractor shall keep on site at least one copy of each of the relevant Standards, Codes, Manual or approved National Standards which are referred to in the Specifications as well as material supplied.

5.6 As-Built Documents

Add following Sub-Clauses:

Project of maintenance of facility (Projekat održavanja objekata) has to be prepared according to Decree on Procedure of technical Documentation Production and its contents - Pravilnik o načinu izrade, razmjeri i bližoj sadržini tehničke dokumentacije (Sl.List CG, br. 23/14, 32/15, 75/15) (eng. Rules on the method of preparation, the scale and the immediate contents of the technical documentation) and Zakon o državnom premjeru i katastru nepokretnosti of Montenegro (Sl. CG, br. 29/07, 73/10, 32/11, 40/11, 43/15) (eng. Cadaster Law).

All as-built documentation shall be handed to the Employer both as hard copies and in digital format in the numbers and in line with the requirements stipulated in the Specification.

03/12/18

After completion of Works, the Contractor shall handed over the Employer six (6) printed copies of complete project documentation for the construction, three (3) copies will be transmitted on CD data in DWG (DXF), PDF, and Excel form.
The final version of As-built drawings (Projekat izvedenog objekata) shall be approved by Employer prior to issuing of the Taking-Over Certificate in accordance with the Clause 10.2 [Taking over of Parts of the Works] of GC.
As-built drawings shall be a part of Project of maintenance of facility (Projekat održavanja objekata).

5.7 Operation and Maintenance Manuals

Add following Sub-Clause:

The Maintenance and Operation Manuals (M&O Manuals) shall be handed over in language of Contract as well as in local language in 2 (two) printed copies and 2 (two) copy on CD data. The Manuals defines the requirements and procedures for the effective operation, maintenance and decommissioning of the Plant.
Based on As-built drawings due to Sub-Clause 5.6 comprehensive facility Manuals shall include:

i) physical description;
ii) functional description;
iii) preventive maintenance (procedures and schedule);
iv) corrective maintenance (repair requirements);
v) spare parts list;
vi) operation-/maintenance-significant drawings.

The Manual shall provide a means to reduce operating costs through a comprehensive Maintenance Program, part of which includes the development of a Maintenance Plan (MP). The Manual shall be divided into following chapters:

i) description - system-level;
ii) operating procedures - Controls/Start-up/Shutdown/Emergency Over-Ride/Seasonal Changeover;
iii) problems and solutions - troubleshooting;
iv) preventive (Planned) Maintenance (PM) - Procedures/Intervals.

Add following new Clauses:

5.9 Drawings on site

One copy of all drawings and documents relating to the Works shall be kept by the Contractor on the Site and the same shall at all reasonable times be available for inspection and use by the Project Manager, who shall have the right at all reasonable times to inspect at the premises of the Contractor or any of his Sub-contractors all drawings of and all documents relative to the Works or any part thereof.

5.10 General Requirements on Design Works, Force Majeure

The Contractor agree design documentation, written documentation and photos to archive for a period of 5 years from the time of obtaining final building permit.

03/12/18

The Contractor shall notify the Employer in writing within four (4) weeks from the date of signing of this Contract the names, addresses and telephone numbers of his representatives responsible for Design Works, the designers and Subcontractors.

In the event that any of the procedures proposed by the Employer will be in breach of technical or other standards and regulations, the Contractor shall, at such a contradiction Employer attention and provide an alternative solution, which is the technical or other standards and regulations consistent and maximally reflects the requirements of the Employer.

The Contractor shall inform the Employer in advance of any negotiations with all parties to administrative proceedings (including pre-meeting, kick-off meeting) and all the concerned authorities and the Employer is obliged to issue a relevant Power of Attorney for this purpose. The Contractor agrees to inform Employer regularly of the progress and status of negotiations and handling matters in question with the relevant government authorities, organizations and local entities in the building permit procedure in the form of a written report at 14-day periods (especially building permits, changes in the documentation).

All information, data, drawings and documents prepared by the Contractor for performing the services and works subject of the Contract shall be deemed as the exclusive property of the Employer, copyrights included. The Contractor may not use them, except in connection with performance of services and works. All information, data, drawings and documents of Employer that may be in the possession of the Contractor or with which it is acquainted, shall remain the exclusive property of the Employer. The Contractor may not use them except for performing Services and Works subject of the Contract.

With the exception of the prior written approval of the Employer, the Consultant shall include in the Contracts with its Design Subcontractors a provision stating that they have to do their best themselves at any time whether before or after performing the services and works, or after termination of the Contract, not to use or disclose to anyone any data, drawings, documents or any other information of any kind and in any manner, whether written or oral that may be in their possession or to which they are privy, or whatever is related to the Contract or services or to the works or work secrets, transactions, deals or affairs of the Employer.
Contractor shall not be deemed in breach of this Contract regarding Design Works if Contractor is unable to complete the Services or any portion thereof by reason of fire, earthquake, labor dispute, act of God or public enemy, death, or any local, state, federal, national or international law, governmental order or regulation or any other event beyond Contractor's control according to Clause 19. [Force Majeure] of GC.

The Employer shall prepare, organise and maintained all procedures in connection with easements for construction yards as well as for additionally yards for Contractor´s Site Facilities - if any, related with

ℓ 03/12/18

construction works, as well as all procedures regarding to cadastre office in accordance with local Laws. The Employer shall ensure all necessary building permits as well as appropriate settlement of land ownership and potential purchase of land, including its permanently or temporary occupation. All other with construction related duties belongs to the Contractor (Site Yard Facilities, parking areas and yard for vehicles and machinery etc.).

5.11 Server Management & Operation

The Contractor shall provide delivery, installation, configuration, adaption, maintenance and operation of exchange server (ODOT FTP server, StorageGRID or similar) for data storage, especially for drawings, documentation and as a storage management for back up, working under Microsoft environments (Active Directory, Exchange, file and print services under Windows 2010). The server shall have restricted authenticating access with certified security components, passwords and users IDs separate for Employer and Contractor and appropriate capacity and storage system with plugin system.

The server shall ensure non-AutoCAD users on-line access to the drawing files and shall protect the original DWG files from unauthorized changes. Installed software shall encrypt each file on server due to restricted access of users and ward against unauthorized recipients opening them. Access and usage rights shall be managed during whole time for completion by the Contractor.

6. Staff and Labour

6.1 Engagement of Staff and Labour

Add at the end of the Sub-Clause:

The Contractor shall document and communicate to all workers their working conditions and terms of employment, including their entitlement to wages, hours of work, overtime arrangements and overtime compensation, and any benefits (such as leave for illness, maternity / paternity or holiday).

The Contractor is encouraged, to the extent practicable and reasonable, to employ staff and labour with appropriate qualifications and experience from sources within the Country.

6.2 Rates of Wages and Conditions of Labour

Add at the end of the Sub-Clause:

Where the Contractor is party to a collective agreement or is otherwise bound by it, the Contractor shall comply with its terms and conditions.

Deductions from wages for disciplinary measures shall not be permitted nor shall any deductions from wages not provided for by national law be permitted without the expressed permission of the worker concerned. Deductions must never lead to an employee receiving less than the applicable minimum wage.

03/12/19

All workers shall be provided with clearly understandable verbal and written information about the conditions in respect of wages before they enter employment and of the particulars of their wages for the pay period concerned each time that they are paid. Wages shall be paid in legal tender in full, on time and directly to the workers concerned. The Contractor shall maintain records of all payments and deductions made.

Add at the end of the Sub-Clause:

The Contractor shall inform the Contractor's Personnel about their liability to pay personal income taxes in the Country in respect of such of their salaries, wages, allowances and any benefits as are subject to tax under the Laws of the Country for the time being in force, and the Contractor shall perform such duties in regard to such deductions thereof as may be imposed on him by such Laws.

6.4 Labour Laws

Add at the end of the Sub-Clause:

The Contractor shall ensure that obligations to staff and labour under labour, health and safety and social security laws and regulations arising from the employment relationship shall not be avoided through the use of labour-only contracting arrangements.

6.5 Working Hours

Add at the end of the Sub-Clause:

Hours of work shall comply with applicable laws, collective agreements, and industry standards. Overtime shall be voluntary wherever possible, shall not be demanded on a regular basis and shall always be compensated at a premium rate.

6.6 Facilities for Staff and Labour

Add at the end of the Sub-Clause:

Where the Contractor provides living accommodation for workers, the accommodation shall be appropriate for its location and be clean, safe and, at a minimum, meet the basic needs of workers. The accommodation shall comply with national legislation and, where possible, follow international good practice as set out in the IFC / EBRD Public Guidance.

The Contractor shall ensure that workers' freedom of movement to and from the accommodation is not unduly restricted.

6.7 Health and Safety

Add at the end of the Sub-Clause:

03/12/18

The Contractor shall provide the Employer with a written Health and Safety Policy and a project-specific Health and Safety Plan before the commencement of work. The Plan shall include details of the Contractor's OHS management system, including the Contractor's plans to manage and monitor the health and safety risks associated with all construction work under its control. The Plan shall be made available to the lenders prior to the start of Construction.

Every contractor shall plan, manage and monitor construction work carried out by him or under his control in a way which ensures that, so far as is reasonably practicable, it is carried out without risks to health and safety.

The Contractor shall ensure that a safe and healthy working environment is provided and that best occupational health and safety practice is promoted. The Contractor shall take steps to prevent accidents, injury and disease arising in the course of work by identifying and controlling risks to workers, as far as is reasonably practicable. The Contractor shall ensure that all staff, labourers and persons entitled to be on site receive the necessary supervision, information, instruction and training to do their jobs safely. Where appropriate, the Contractor shall provide appropriate equipment to minimise health and safety risks and enforce its use. The Contractor shall put in place arrangements for emergency prevention, preparedness and response.

The Contractor shall develop and maintain throughout the execution of the Contract preventative measures relating to worker health concerns, including providing inoculations or other preventative treatments for disease that are either global in nature or endemic in the project area. The Contractor shall undertake appropriate measures to reduce the risk of transfer of STDs and HIV/AIDS among the Contractor's Personnel and the local community including providing condoms and information for raising awareness among employees of sexually transmitted disease and HIV/AIDS.

Add at the end of the Sub-Clause:

6.8 Contractor's Superintendence

Add at the end of the Sub-Clause:

The Contractor shall ensure that a grievance mechanism is available to all workers and their organisations to use without fear of intimidation or retaliation. The Contractor will ensure that employees are informed about the grievance mechanism and that this is part of the training for new employees and information is posted in relevant areas in the construction camp. The Contractor shall ensure that the grievance mechanism involves an appropriate level of management and addresses concerns promptly, using an understandable and transparent process that provides feedback to those concerned without any retribution.

A reasonable proportion of the Contractor's superintending staff shall have a working knowledge of English and Montenegrin or the Contractor shall have available on site at all times a sufficient number

03/12/18

of competent interpreters to ensure the proper transmission of instructions and information.

6.9 Contractor's Personnel

At the beginning of the Sub/Clause add:

The Contractor's Personnel shall include the persons named in the Tender having professional licences required by Montenegrin Law or by law of any other Eligible country in undertaking their duties under the Contract.

Add the following Sub-Clauses 6.12 through to 6.24:

6.12 Foreign Personnel

The Contractor may bring in to the Country any foreign personnel who are necessary for the execution of the Works to the extent allowed by the applicable Laws. The Contractor shall ensure that these personnel are provided with the required residence visas and work permits. The Employer will, if requested by the Contractor, use his best endeavours in a timely and expeditious manner to assist the Contractor in obtaining any local, state, and national or government permission required for bringing in the Contractor's personnel.

The Contractor shall be responsible for the return of these personnel to the place where they were recruited or to their domicile. In the event of the death in the Country of any of these personnel or members of their families, the Contractor shall similarly be responsible for making the appropriate arrangements for their return or burial.

6.13 Supply of Foodstuffs

The Contractor shall arrange for the provision of a sufficient supply of suitable, culturally appropriate food as may be stated in the Specification at reasonable prices for the Contractor's Personnel for the purposes of or in connection with the Contract.

6.14 Supply of Water

The Contractor shall, having regard to local conditions, provide on the Site an adequate supply of drinking and other water for the use of the Contractor's Personnel.

6.15 Measures against Insect and Pest Nuisance

The Contractor shall at all times take the necessary precautions to protect the Contractor's Personnel employed on the Site from insect and pest nuisance, and to reduce the danger to their health. The Contractor shall comply with all the regulations of the local health authorities, including use of appropriate insecticide.

6.16 Alcoholic Liquor or Drugs

ℓ 03/12/10

The Contractor shall not, otherwise than in accordance with the Laws of the Country, import, sell, give, barter or otherwise dispose of any alcoholic liquor or drugs, or permit or allow importation, sale, gift, barter or disposal thereof by Contractor's Personnel.

6.17 Arms and Ammunition

The Contractor shall not give, barter, or otherwise dispose of, to any person, any arms or ammunition of any kind, or allow Contractor's Personnel to do so.

6.18 Festivals and Religious Customs

The Contractor shall respect the Country's recognized festivals, days of rest and religious or other customs.

6.19 Funeral Arrangements

The Contractor shall be responsible, to the extent required by local regulations, for making any funeral arrangements for any of his local employees who may die while engaged upon the Works.

6.20 Forced Labour

The Contractor shall not employ forced labour, which consists of any work or service, not voluntarily performed, that is exacted from an individual under threat of force or penalty, and includes any kind of involuntary or compulsory labour, such as involuntary prison labour, indentured labour, bonded labour or similar labour contracting arrangements.

6.21 Child Labour

The Contractor shall not employ children in a manner that is economically exploitative, or is likely to be hazardous, or to interfere with, the child's education, or to be harmful to the child's health or physical, mental, spiritual, moral, or social development. Where the relevant labour laws of the Country have provisions for employment of minors, the Contractor shall follow those laws applicable to the Contractor. The Contractor shall put in place a procedure to verify the ages of young workers. Children below the age of 18 years shall not be employed in dangerous work.

6.22 Employment Records of Workers

The Contractor shall keep complete and accurate records of the employment of labour at the Site. The records shall include the names, ages, genders, hours worked and wages paid to all workers. These records shall be summarized on a monthly basis and submitted to the Engineer, and these records shall be available for inspection by the Bank's auditors during normal working hours. These records shall be

03/12/18

included in the details to be submitted by the Contractor under Sub-Clause 6.10 [Records of Contractor's Personnel and Equipment].

6.23 Workers' Organisations

In countries where the relevant labour laws recognize workers' rights to form and to join workers' organisations of their choosing without interference and to bargain collectively, the Contractor shall comply with such laws. Where the relevant labour laws substantially restrict workers' organisations, the Contractor shall enable alternative means for the Contractor's Personnel to express their grievances and protect their rights regarding working conditions and terms of employment. In either case described above, and where the relevant labour laws are silent, the Contractor shall not discourage the Contractor's Personnel from forming or joining workers' organisations of their choosing or from bargaining collectively, and shall not discriminate or retaliate against the Contractor's Personnel who participate, or seek to participate, in such organisations and bargain collectively. The Contractor shall engage with such workers' representatives. Workers' organisations are expected to fairly represent the workers in the workforce. The Contractor shall ensure that workers' representatives have access to all workplaces necessary to enable them to carry out their representative functions.

6.24 Non-Discrimination and Equal Opportunity

The Contractor shall not make employment decisions on the basis of personal characteristics unrelated to inherent job requirements. The Contractor shall base the employment relationship on the principle of equal opportunity and fair treatment, and shall not discriminate with respect to aspects of the employment relationship, including recruitment and hiring, compensation (including wages and benefits), working conditions and terms of employment, access to training, promotion, termination of employment or retirement, and discipline. The Contractor shall ensure equal remuneration for men and women for work of equal value. In countries where the relevant labour laws provide for non-discrimination in employment, the Contractor shall comply with such laws. When the relevant labour laws are silent on non-discrimination in employment, the Contractor shall meet this Sub-Clause's requirements. Special measures of protection or assistance to remedy past discrimination or promote local employment opportunities or selection for a particular job based on the inherent requirements of the job shall not be deemed discrimination.

7 Plant, Materials and Workmanship

7.4 Testing

In the second paragraph of sub-clause 7.4 revise the wording "The Contractor shall provide …" to "The Contractor shall provide at his own cost …"

7.5 Rejection

03/12/18

Add at the end of the Sub-Clause:

In case of the Engineer rejection of any material or work, the Contractor shall, before starting to rectify such condition, submit his proposal to the Engineer for such rectification for approval.

7.8 Royalties

In the second line add "including fees for dumping waste tips, debris and hazardous waste", after the word "payments".

8 Commencement, Delays and Suspension

8.1 Commencement of Works

Replace the second sentence of first paragraph:

Except as otherwise specified in the Particular Conditions of Contract, the Commencement Date shall be the date at which the following precedent conditions have all been fulfilled:

a) signature of the **Contract Agreement** by both Parties, and if required, approval of the Contract by relevant authorities in the Country, and

b) receipt by the Employer of the **Performance Security** under Sub-Clause 4.2 [Performance Security], and

c) receipt by the Employer of the **Professional Indemnity Insurance** under Sub-Clause 18.5 [Professional Indemnity Insurance], and

The Employer shall give the relevant authorities, with copies sent to the Contractor and the Engineer, not less than 7 days notice of commencement of construction including the Safety Plan prepared by the Contractor, name of licensed Contractor's Representative, name of licensed Employer's Representative.

8.3 Programme

Add at the end of the Sub-Clause:

The form of the programme of performance of the Contract shall be to critical path method (CPM) as a Contract Master Schedule (CMS) using Primavera SureTrack Programme, MS Project or other similar international recognised Programmes. The activities shall be definite, discrete and measurable work elements and shall be selected such they depict the full scope of the work including design phases, construction and commissioning and start-up of the facility. The CMS shall clearly identify key milestone dates due to Time Schedule according to Volume II., Appendix 4. The level of detail shall be sufficient to break down the work scope into manageable and measurable activities acceptable to Engineer. The CMS shall be revised only with Engineer's prior approval.

8.4 Extension of Time for Completion

03/12/18

Delete in paragraph (e) the words "on the site".

Add at the end of the Sub-Clause:

"Any extension of Time for Completion shall be formalised as an Addendum to the Contract"

8.7 Delay Damages

Substitute the first paragraph:

If the Contractor fails to comply with Sub-Clause 8.3 [Programme] or with Sub-Clause 8.2 [Time for Completion], the Contractor shall subject to Sub-Clause 2.5 [Employer's Claims] pay Delay Damages to the Employer for this default. These Delay Damages shall be:

a) for **Part of the Works** referred to in Sub-clause 8.3 [Programme], the sum stated in the *Appendix to Tender*, and

b) for the **Works**, the sum stated in the *Appendix to Tender*, which shall be paid for every day which shall elapse between the Time for Completion and the stated date in the Taking Over Certificate.

Delay damages shall be paid within 60 (sixty) days after delivery of an invoice issued by the Employer to the Contractor.

Notwithstanding with the above, the Contractor shall compensate to the Employer all the Consequential Damages such as (but not limited to) loss of production, loss of profit or loss of any Contract, or for any indirect, special or consequential loss it suffered in accordance with the Contractor's failure to comply with Sub-Clause 8.2 [Time for Completion].
These damages shall not relieve the Contractor from his obligation to complete the Works, or from any other duties, obligations or responsibilities which he may have under the Contract.

9 Tests on Completion

9.1 Contractor's Obligations

Add at the end of the first paragraph:

"and shall be liable for all costs whatsoever, including labour, transport, media, royalties, energy, etc."

Add at the end of the Sub-Clause:

During Trial Operation the Plant shall be operated over the full load range enabling the Plant to be made ready for the Guarantee Tests. Trial Operation shall mean the period 240 (twohundredforty) days continuous operation at various operating modes. Out of this, 96 (ninetysix) hours of uninterrupted operation must be at full load as may be provided by the Employer. If there is any interruption in this

96 hours period, the same shall have to be attempted and demonstrated for guaranteed 96 hours of uninterrupted running. If period of interruption is more than 4 (four) hours, the 24 (twentyfour) hours will be added to 240 (twohundredforty) days. If the period of interruption during Trial Operation is more than 48 (fortyeight) hours, then the Employer shall have the discretion of repeating the entire test, depending on the circumstances of down time. The conditions of Law on spatial development and construction of structures No. 51 dated on Aug. 22, 2008 (Official Gazette of Montenegro) of State of Montenegro shall be taken into consideration.

The Trial Operation shall be considered successful, provided that each item/part of the Plant can operate continuously at the specified operating characteristics with all operating parameters within the specified limits. The Contractor shall furnish adequate notice to the Employer about the commencement of Trial Operation.

A Trial Operation Report shall have details of various observations made during Trial Operation, details of interruptions occurred, adjustments made, and any minor repairs done, including start and finish of Trial Operation and shall be signed by the representatives of both parties. Based on the observations, necessary modifications/repairs to the Plant shall be carried out by the Contractor to the full satisfaction of the Employer to enable to carry out the Guarantee tests on the facilities. However, minor defects which do not endanger the safe operation of the Plant, shall not be considered as reasons for withholding the aforesaid permission.

Method of conductance of tests, test code and accuracy of tests shall be provide:

(i) for Civil Works due to Clause 3.2 of Technical Specifications (Volume III. i)
(ii) for Mechanical and Electrical Parts due to Clause 3.3 of Technical Specifications (Volume III. i).

The Works shall not be considered to be completed for the purposes of taking-over under the Sub-Clause 10.1 [Taking over of Works and Sections] until the Engineer has received the Trail Operation Report in a scope and details as written above.

10 Employer's Taking Over

10.1 Taking Over of the Works and Sections

Add at the end of the Sub-Clause:

When applying for the Taking-Over Certificate, the Contractor shall submit the Taking-Over Documentation as set forth in the Specification.

Taking over of the Works will be carried out in accordance with the Law of the Country. A Taking-Over Memorandum will be prepared and signed by the Taking-Over Committee of the Employer. The

03/12/18

Taking-Over Certificate shall be issued by the Engineer only upon the issue of the said Taking-Over Memorandum.

Add a new Sub-Clause:

10.5 Operational Acceptance

Subject to clause below, Operational Acceptance shall occur in respect of the Facilities or any part thereof when:

(a) the Test on Completion has been successfully completed and the Functional Guarantees are met; or

(b) the Test on Completion has not been successfully completed or has not been carried out for reasons not attributable to the Contractor within the period from the date of Completion specified in the SCC or any other agreed upon period; or

(c) the Contractor has paid the liquidated damages specified in Sub-Clause. 7 [Delay damages] hereof; and

any minor items hereof relevant to the Facilities or that part thereof have been completed.
At any time after any of the events set above have occurred, the Contractor may give a notice to the Project Manager requesting the issue of an Operational Acceptance Certificate in the form provided in the tender documents or in another form acceptable to the Employer in respect of the Facilities or the part thereof specified in such notice as at the date of such notice.

The Project Manager shall, after consultation with the Employer, and within seven (7) days of receipt of the Contractor's notice, issue an Operational Acceptance Certificate.

If within seven (7) days of receipt of the Contractor's notice, the Project Manager fails to issue the Operational Acceptance Certificate or fails to inform the Contractor in writing of the justifiable reasons why the Project Manager has not issued the Operational Acceptance Certificate, the Facilities or the relevant part thereof shall be deemed to have been accepted as at the date of the Contractor's said notice.

12 Measurement and Evaluation

12.2 Method of Measurement

Add at the end of the Sub-Clause:

The Contractor shall employ qualified quantity surveyors and survey teams to determine actual measurements of earthworks, structures, pipelines etc. and shall provide such measurements to the Engineer as and when the Engineer requires.

The method of measurement shall be guided by the principle, that no item will be measured under two or more separate items.

03/12/18

12.3 Evaluation

In second paragraph insert at the end of the first sentence:
„Unit Price adjustment will not be accepted."

Delete section (a) (i) to (iv) and „or (b):

Add at the end of the Sub-Clause:

Any item of work included in the Bill of Quantities for which no rate or price was specified shall be considered as included in other rates and prices in the Bill of Quantities and will not be paid for separately.

13 Variations and Adjustments

13.1 Right to vary

Add at the end of the Sub-Clause:

"The preparation of the Variation Order is obligation of the contractor. The Engineer will only issue instructions and order the Variation Order."

13.3 Variation procedures

Add at the end of the Sub-Clause:

Where the Variation or Variations issued by the Engineer (after prior consent given by the Employer) cause the Contract Price to exceed the Accepted Contract Amount, then this shall be formalised as an Addendum/Amendment to the Contract.
The any changes to the commercial condition of contract(such: modification of the GCC or PCC, change in the structure of the JVCA, assignment of the contract, etc) or any substantial change in the price, scope or duration of the contract shall be introduced through the means of an Addendum/Amendment to the contract

The Variation Orders and Addenda/Amendments shall be subject to the Bank's no objection before they are signed by the parties.

13.4 Payment in Applicable Currencies

This Sub-Clause is not applicable.

13.5 Provisional Sums

Add at the end of the Sub-Clause:

The provisions of this Sub-Clause shall also apply for expenditure of Physical Contingencies included in Volume I.iv., Bill of Quantities.

13.7 Adjustments for Changes in Legislation

Add at the end of the Sub-Clause:

03/12/18

Notwithstanding the foregoing, the Contractor shall not be entitled to an extension of time if the relevant delay has already been taken into account in the determination of a previous extension of time and such Cost shall not be separately paid if the same shall already have been taken into account in the indexing of any inputs to the table of adjustment data in accordance with the provisions of Sub-Clause 13.8 [Adjustments for Changes in Cost].

14 Contract Price and Payment

14.1 The Contract Price

Insert in 14.1 (b) after „fees":

"....and other charges that may be levied in accordance with laws and regulation in force on the date 28 days prior to the latest date for submission of tenders, imposed both outside and inside the Employer's Country on the Contractor's equipment, plant, materials, and supplies (whether permanent or temporary) acquired for the Contract, and on services performed under the Contract,"

Add the following after 14.1 (b):

(i) The Contractor is not exempted from import duties and import taxes levied on the import on Contract items into the Country;

(ii) The Contractor shall be entirely responsible for the presentation of documentation in order to clear the Goods through the customs authorities, and shall be deemed to have been satisfied (before submitting the Tender) as to all relevant procedures.

14.2 Advance Payment

Add at the end of the Sub-Clause:

The advance payment guarantee shall be issued by a reputable bank or financial institution selected by the Contractor and shall be in the form annexed to these Particular Conditions or in another form approved by the Employer.

14.3 Application for Interim Payment Certificate

Delete "copies" in the first line and substitute with "originals in English"
In paragraph (b) delete "and Sub-Clause 13.8 [Adjustments for Changes in Cost]".

Add the words at the end of the Sub-Clause:
(h) the amount of VAT due.

ℓ 03/12/18

14.4 **Schedule of Payments**
Replace in the last paragraph "42 days" with "28 days"

14.5 **Plant and Materials Intended for the Works**
This Sub-Clause is not applicable.

14.6 **Issue of Interim Payment Certificates**
Replace in the first sentence the words „28 days" with „15 days".

14.7 **Payment**
Replace paragraphs b) and c):

(b) the amount certified in each Interim Payment Certificate within **45 (forty five) days** after the Engineer receives the Statement and supporting documents or, at a time when the Bank's loan or credit (from which part of the payments to the Contractor is being made) is suspended, the amount shown on any statement submitted by the Contractor within 14 days after such statement is submitted, any discrepancy being rectified in the next payment to the Contractor; and

(c) the amount certified in the Final Payment Certificate within **45 (forty five) days** after the Employer receives this Payment Certificate or, at a time when the Bank's loan or credit (from which part of the payments to the Contractor is being made) is suspended, the undisputed amount shown in the Final Statement within **45 (forty five) days** after the date of notification of the suspension in accordance with Sub-Clause 16.2.

Add the words:
The Contractor shall notify to the Employer, prior to any payment under the Contract, details of the bank account (s) nominated by the Contractor for payments for the currency or currencies specified in the Contract. All payments of the amounts due to the Contractor shall be made into the bank account (s) thus nominated by the Contractor.

14.9 **Payment of Retention Money**
Add at the end of the Sub-Clause:

After Engineer´s written approval of Contractor´s Trail Operation Report due to Clause 9.1 (Contractor´s Obligations), Engineer shall release Retention Money in accordance with Appendix to Tender, Clause 14.3.

Based on Engineer´s written approval of Trail Operation Report, the first half of the Retention Money shall be certified for payment by the Engineer, the Contractor shall be entitled to substitute a guarantee, in the form annexed to these Particular Conditions or in another form approved by the Employer and provided by an entity approved by the Employer and issued by a reputable bank or financial institution selected by the Contractor, for the second half of the Retention Money. The Contractor shall ensure that the guarantee is in the amounts and currencies of the second half of the Retention Money and is valid and enforceable until the Contractor has executed and

03/12/19

completed the Works and remedied any defects, as specified for the Performance Security in Sub-Clause 4.2.

On receipt by the Employer of the required guarantee, the Engineer shall certify and the Employer shall pay the second half of the Retention Money. The release of the second half of the Retention Money against a guarantee shall then be in lieu of the release under the second paragraph of this Sub-Clause. The Employer shall return the guarantee to the Contractor within 21 days after receiving a copy of the Performance Certificate.

If the Performance Security required under Sub-Clause 4.2 is in the form of a demand guarantee, and the amount guaranteed under it when the Taking-Over Certificate is issued is more than half of the Retention Money, then the Retention Money guarantee will not be required. If the amount guaranteed under the Performance Security when the Taking-Over Certificate is issued is less than half of the Retention Money, the Retention Money guarantee will only be required for the difference between half of the Retention Money and the amount guaranteed under the Performance Security.

14.10 Statement at Completion

Substitute the figure "84" in the first paragraph with the figure "60". Substitute the word "copies" in the first paragraph with the words "originals in English".

14.11 Application for Final Payment Certificate

Substitute the figure "56" in the first paragraph with the figure "28". Substitute the word "copies" in the first paragraph with the words "originals in English"

14.15 Currencies of Payment

This Sub-Clause is not applicable. The Contract Price shall be paid in EURO.

15 Termination by Employer

15.2 Termination by Employer
Add letter (g) to the first section:

(g) fails to submit written evidence of registration of the Contractor and all his Subcontractors by the Commencement Date.

Add the following Sub-Clause:

15.6 Prohibited Practices
If the Employer determines, based on reasonable evidence, that the Contractor has engaged in Prohibited Practices, in competing for or in executing the Contract, then the Employer may, after giving 14 days notice to the Contractor, terminate the Contract and expel him from the Site, and the provisions of Clause 15 shall apply as if such termination had been made under Sub-Clause 15.2.

03/12/18

Should any employee or subcontractor of the Contractor be determined, based on reasonable evidence, to have engaged in Prohibited Practices during the execution of the work then that employee shall be removed in accordance with Sub-Clause 6.9 [Contractor's Personnel].

For the purpose of this Sub-Clause, Prohibited Practices is defined as one or more of the following:

(a) "coercive practice" means impairing or harming, or threatening to impair or harm, directly or indirectly, any party or the property of the party to influence improperly the actions of a party.
(b) "collusive practice" means an arrangement between two or more parties designed to achieve an improper purpose, including influencing improperly the actions of another party.
(c) "corrupt practice" means the offering, giving, receiving, or soliciting, directly or indirectly, anything of value to influence improperly the actions of another party.
(d) "fraudulent practice" means any act or omission, including a misrepresentation, that knowingly or recklessly misleads, or attempts to mislead, a party to obtain a financial or other benefit or to avoid an obligation.
(e) "theft" means the misappropriation of property belonging to another party.
(f) "misuse of the Bank's resources" means improper use of the Bank's resources, committed either intentionally or through reckless disregard; and,
(g) "obstructive practice" means (i) destroying, falsifying, altering or concealing of evidence material to a Bank investigation, which impedes the Bank's investigation; (ii) making false statements to investigators in order to materially impede a Bank investigation into allegations of a Prohibited Practice; (iii) failing to comply with requests to provide information, documents or records in connection with a Bank investigation; (iv) threatening, harassing or intimidating any party to prevent it from disclosing its knowledge of matters relevant to a Bank investigation or from pursuing the investigation; or (v) materially impeding the exercise of the Bank's contractual rights of audit or inspection or access to information.

16 Suspension and Termination by Contractor

16.2 Termination by Contractor

Delete paragraph (d) and substitute with:

(d) The Employer substantially fails to perform his obligations under the Contract in such manner as to materially and adversely affect the ability of the Contractor to perform the Contract.

Add the following paragraphs h) and j):

03/12/18

(h) In the event the Bank suspends the loan or credit from which part or whole of the payments to the Contractor are being made, if the Contractor has not received the sums due to him upon expiration of the 14 days referred to in Sub-Clause 14.7 [Payment] for payments under Interim Payment certificates, the Contractor may, without prejudice to the Contractor's entitlement to financing charges under Sub-Clause 14.8 [Delayed Payment], take one of the following actions, namely (i) suspend work or reduce the rate of work under Sub-Clause 16.1 above, or (ii) terminate under the Contract by giving notice to the Employer, with a copy to the Engineer, such termination to take effect 14 days after the giving of the notice, or

(i) the Contractor does not receive the Engineer's instruction recording the agreement of both Parties on the fulfilment of the conditions for the Commencement of Works under Sub-Clause 8.1 [Commencement of Works].

17 Risk and Responsibility

17.1 Indemnities

Replace sub-paragraph (b) by the following:

(b) damage to or loss of any property, real or personal (other than the Works), to the extent that such damage or loss arises out of or in the course of or by reason of the Contractor's design (if any), the execution and completion of the Works and the remedying of any defects, unless and to the extent that any such damage or loss is attributable to any negligence, wilful act or breach of the Contract by the Employer, the Employer's Personnel, their respective agents, or anyone directly or indirectly employed by any of them.

17.7 Use of Employer's Accommodation/Facilities

The Contractor shall take full responsibility for the care of the Employer provided accommodation and facilities, if any, as detailed in the Specification, from the respective dates of hand-over to the Contractor until cessation of occupation (where hand-over or cessation of occupation may take place after the date stated in the Taking-Over Certificate for the Works).

If any loss or damage happens to any of the above items while the Contractor is responsible for their care arising from any cause whatsoever other than those for which the Employer is liable, the Contractor shall, at his own cost, rectify the loss or damage to the satisfaction of the Engineer.

18 Insurance

18.3 Insurance Against Injury to Persons and Damage to Property

At the end of this Sub-Clause insert following:

Insurance cover shall extend to liability to third parties arising from accidents in the Country involving vehicles supplied by the Contractor

05/12/18

and used by the Employer, the Beneficiary, the Contractor or the Engineer under the Contract.

Insert new Clauses as following:

18.5 Professional Indemnity Insurance

The Contractor shall affect, by the Commencement Date, professional indemnity insurance, which will cover the risks due to an Appendix 3 (Insurance Requirements) to Contract.
The Contractor shall use his best endeavours to maintain the professional indemnity insurance in full force and effect until 10 years from the date stated in the Performance Certificate. The Contractor shall undertake to notify the Employer promptly of any difficulty in extending, renewing or reinstating this insurance.

18.6 Contractor´s liability for Design Works

The Contractor shall effect and maintain, during the term of this Contract, at its sole expense, professional liability which shall cover all risks of professional negligence in Design Works and advertising injury insurance from a recognized insurance company in the amount and under condition due to an Appendix 3 (Insurance Requirements) to Contract.
Such insurance shall name the Contractor individually as an additional named insured. The Contractor shall maintain the insurance policies required by this clause for the duration of the Contract and produce evidence of insurance, if requested. The Contractor undertakes to notify the Employer promptly of any difficulty in extending, renewing or reinstating this insurance. The insurance shall include also cover in respect of mitigation, rectification and re-design costs - if any.

If the Contractor fails to submit or extend the validity of such insurance, the Employer is entitled to enter into or extend such insurance at the expense, risk and peril of the Contractor without any further written communication and offset this against any invoice issued by the Contractor.

19 Force Majeure

19.1 Notice of Force Majeure

Replace in the first paragraph:

"all of his obligations" by "its substantial obligations".
Replace in the second Paragraph:

"such obligations" by it's obligations"

20 Claim, Disputes and Arbitration

20.2 Appointment of the Dispute Adjudication Board

03/12/18

Replace the second sentence of the tenth paragraph of this Sub-Clause with:
Unless otherwise agreed by both parties, the appointment of the DAB (including each member) shall expire when the DAB have given its decision on the dispute referred to it under Sub-Clause 20.4 [Obtaining Dispute Adjudication Board's Decision], unless other disputes have been referred to the DAB by that time under Sub-Clause 20.4, in which event the relevant date shall be when the DAB has also given decision on those disputes.

20.5 Amicable Settlement

Replace Sub-Clause:

Where a Notice of Dissatisfaction has been given under Sub-Clause 20.4 above, both Parties shall attempt to settle the dispute amicably before the commencement of arbitration. However, unless both Parties agree otherwise, the Party giving a Notice of Dissatisfaction in accordance with Sub-Clause 20.4 above should move to commence arbitration after the 60th (sixtieth) day from the day on which a Notice of Dissatisfaction was given, even if no attempt at an amicable settlement has been made.

20.6 Arbitration

Replace Sub-Clause:

Any dispute between the Parties arising out of or in connection with the Contract not settled amicably in accordance with Sub-Clause 20.5 above and in respect of which the DAB's decision (if any) has not become final and binding shall be finally settled by arbitration. Arbitration shall be conducted as follows:

(a) if the Contract is with a foreign contractor, international arbitration with proceedings administered by the International Chamber of Commerce (ICC) and conducted under the ICC Rules of Arbitration; by one or more arbitrators appointed in accordance with said arbitration rules.

The place of arbitration shall be the location specified in the *Appendix to Tender*, and the arbitration shall be conducted in the language for communications defined in Sub-Clause 1.4 [Law and Language]

(b) if the Contract is with a domestic contractor, arbitration with proceedings conducted in accordance with the laws of the Employer's country.

The arbitrators shall have full power to open up, review and revise any certificate, determination, instruction, opinion or valuation of the Engineer, and any decision of the DAB, relevant to the dispute. Nothing shall disqualify representatives of the Parties and the Engineer from being called as a witness and giving evidence before the arbitrators on any matter whatsoever relevant to the dispute.
Neither Party shall be limited in the proceedings before the arbitrators to the evidence or arguments previously put before the DAB to obtain its decision, or to the reasons for dissatisfaction given in its Notice of

ℓ 03/12/18

Dissatisfaction. Any decision of the DAB shall be admissible in evidence in the arbitration.

Arbitration may be commenced prior to or after completion of the Works. The obligations of the Parties, the Engineer and the DAB shall not be altered by reason of any arbitration being conducted during the progress of the Works.

03/12/18

General Conditions of Contract (GCC)

D.O.O. "Vodovod i kanalizacija" Danilovgrad

[name of Employer]

Construction of Wastewater Plant

[name of Contract]

The Conditions of Contract for Plant and Design-Build: **General Conditions of Contract for electrical and mechanical Plant, and Building and Engineering Works, designed by the Contractor,** Part A shall be those forming Volume II. i of the "Conditions of Contract for Construction", 1st edition 1999 prepared by the *Fédération Internationale des Ingénieurs-Conseils* (FIDIC).

These Conditions are subject to the variations and additions set out in Volume II. ii hereof entitled "Part B: **Particular Conditions of Contract**" (PCC).

Copies of the FIDIC Conditions of Contract can be obtained from:

FIDIC Secretariat
P.O. Box 86
1000 Lausanne 12
Switzerland
Facsimile: 41 21 653 5432
Telephone: 41 21 653 5003

And the FIDIC official web site

WWW.FIDIC.ORG

03/12/18

Construction of WWTP

Volume III

The Requirements

03/12/18

VOLUME III

III.i TECHNICAL SPECIFICATIONS

03/12/18

TABLE OF CONTENT

GENERAL INFORMATION 7

1.1. Basic information on the construction 7
1.2. Proposed scope of works and expected results 7
1.2.1. Wastewater Production 7
1.3. Availability of existing documentation 9
1.4. Geographical location 10
1.5. Geodetic layout 10
1.5.1. Map and geodetic basic data 10
1.5.2. Vertical and horizontal layout of the area concerned 11
1.6. Geological and hydro-geological data 11
1.6.1. Introduction 11
1.6.2. Orographic and geomorphologic conditions 11
1.6.3. Hydrographical characteristics 14
1.6.4. Geological characteristics 16
1.6.5. Geological composition of the terrain 16
1.6.6. Engineering-geological characteristics 17
1.6.7. Hydro-geological characteristics and phenomena 18
1.6.8. Fluctuation of groundwater level 20
1.7. Climatic conditions and seismicity 20
1.7.1. Climate 20
1.7.2. Rainfall 21
1.7.3. Seismic characteristics 21
1.8. Population 23
1.8.1. Present situation 23
1.8.2. Prospective situation 24
1.9. Existing infrastructure conditions 25
1.9.1. Potable water supply 25
1.9.2. Rainwater and sewage water collection 26
1.10. Protected areas and protection zones 26
1.11. Health protection and work safety 27
1.11.1. Working hours 29
1.12. Charges for discharging wastewaters to surface water 29
1.13. Office space 29
1.13.1. General equipment to be provided by the Contractor during the construction period 30
1.13.2. Computer equipment 31
1.14. Construction site 31
1.14.1. Construction site characteristics 31
1.14.2. Construction process 32
1.14.3. Archaeological sites 33
1.15. List of regulations 33

03/12/18

1.15.1. General 33
1.15.2. Indicative list of regulations 33

2. STANDARD OF MATERIALS, WORKMANSHIP AND EQUIPMENT REQUIRED 35

2.1. General Requirements – Civil part 35
2.1.1. General requirements on civil and building works of the construction 35
2.1.2. Protection of the environment 37
2.1.3. Work safety requirements 41
2.1.4. Handing-over/acceptance of the construction site 44
2.1.5. Demolition works 45
2.1.6. Earth works 48
2.1.7. Construction founding 56
2.1.8. Water proofing 58
2.1.9. Concreting and use of reinforced-concrete 60
2.1.10. Buildings 68
2.1.11. Water connections and house water plumbing 76
2.1.12. Sewer connections and house sewerage 79
2.1.13. Piping systems and utility lines outside buildings 82
2.1.14. Ductile iron piping 86
2.1.15. Steel piping 87
2.1.16. Concrete and reinforced-concrete piping 88
2.1.17. Plastic piping 89
2.1.18. Stoneware piping 91
2.1.19. Pipe laying 91
2.1.20. Requirements on water supply system construction 95
2.1.21. Requirements on sewer systems construction 96
2.1.22. Sanitary System 99
2.1.23. Road works 102
2.1.24. Fencing and landscaping 105
2.1.25. Crossing with lines, roads, railways and water courses 105
2.1.26. Work and operations of temporary character 109
2.2. General Requirements – Mechanical and Electrical part 111
2.2.1. Introduction 111
2.2.2. General 111
2.2.3. Electrotechnical equipment 115
2.2.4. Cabling and earthing 125
2.2.5. Automation Equipments 127
2.2.6. Mechanical equipment 133
2.2.7. Pipes 141
2.2.8. Valves and Cocks 146
2.2.9. Water Meters 154
2.2.10. Pumps and pumping stations 154

3. DETAILS OF TESTS REQUIRED 158

ℓ 03/12/18

3.1. Introduction 158
3.1.1. General Requirements on the Tests 158
3.1.2. Testing Materials and Equipment 160
3.2. Tests – Civil part 160
3.2.1. Testing of the water and sewage reservoirs tightness 160
3.2.2. Testing of gravity sewers and branch sewers tightness 161
3.2.3. Testing of sewerage delivery pipes tightness 163
3.2.4. Ovality testing 163
3.2.5. Pressure testing of water pipes 164
3.2.6. Pressure test recording 167
3.2.7. Disinfection of water supply pipes 169
3.3. Tests – Mechanical and Electrical part 169
3.3.1. Tests in Manufacturer's Plant 169
3.3.2. Testing on the construction site 172
3.3.3. Individual Testing 173
3.3.4. Complex testing 175
3.3.5. Operators' training 176
3.3.6. Trial operation 177

4. DETAILS OF ALL WORK REQUIRED TO ACHIEVE COMPLETION 181

4.1. Particular Requirements – Technological part 181
4.1.1. Wastewater Treatment Process 182
4.1.2. Biological treatment process 185
4.1.3. Sludge Treatment 188
4.1.4. Common requirements of WWTP 191
4.1.5. Disposal of sewage sludge 193
4.2. Particular Requirements – Civil part 196
4.2.1. Current situation 196
4.2.2. WWTP location 196
4.2.3. Design and construction conception 196
4.2.4. Description of individual structures 198
4.3. Particular Requirements – Mechanical part 214
4.3.1. Recapitulation of existing situation and required scope of works 214
4.3.2. Required technical design 214
4.3.3. Requirements on machinery and equipment of mechanical and electrical engineering units (PS) 223
4.4. Particular Requirements – Electrical and SCADA part 238
4.4.1. Recapitulation of existing situation and required scope of works 238
4.4.2. Common requirements on electrotechnical works 238
4.4.3. Requirements on "Transformer station" 244
4.4.4. Requirements on "Main supply distribution" 244
4.4.5. Requirements on "Heavy current distribution" 245
4.4.6. Requirements on "Instrumentation and Control (I&C)" 247

03/12/18

4.4.7. Requirements on "Automatic control of technological processes" 250
4.4.8. Requirements on "WWTP SCADA system" 254

5. RECOMMISSIONING AND COMMISSIONING ACTIVITIES TO BE PERFORMED BY THE CONTRACTOR 263

5.1. Documents before the construction works commencement 263
5.1.1. General 263
5.1.2. Tender offer 263
5.1.3. Occupational health and safety 264
5.1.4. Quality management system 265
5.1.5. Elaboration of the Environmental Impact Assessment documents (EIA) 266
5.1.6. Elaboration of the Preliminary design for building permit (Idejni projekat) 266
5.1.7. Elaboration of the main design with the details for execution of works (Glavni projekat) 267
5.1.8. Elaboration of contractor's documentation for manufacturing preliminaries of the construction 269
5.1.9. Work schedule 269
5.1.10. Passportization (photo-documentation) 270
5.1.11. Environmental protection in course of construction 271
5.1.12. Information tables 273
5.2. Documentation in course of the work implementation 273
5.2.1. Building log 273
5.2.2. Photo-documentation (passport) 274
5.2.3. As-built drawings (Projekt izvedenog objekta) 274
5.2.4. Test plan 277
5.2.5. Operation and maintenance manuals (training), Project of maintenance of facility (Projekat održavanja objekta) 278
5.2.6. Operating instructions 279
5.3. Documents for construction hand-over and approval 280
5.3.1. Documents to construction, technological and electrotechnical works 280
5.3.2. Documents to ACSTP 281
5.3.3. Schedule of documents submitting 282

03/12/18

GENERAL INFORMATION

1.1. BASIC INFORMATION ON THE CONSTRUCTION

Project title:	DANILOVGRAD MUNICIPAL INFRASTRUCTURE PROJECT CONSTRUCTION OF WWTP
Employer:	D.O.O. "Vodovod i kanalizacija" Danilovgrad
District:	Danilovgrad
Place of construction:	Danilovgrad

The purpose of the "Danilovgrad Municipal Infrastructure Project, Construction of WWTP" project is to deal with the treatment of sewage wastewaters through the construction of a new wastewater treatment plant.

This project is to be followed by the "Danilovgrad Municipal Infrastructure Project, Rehabilitation of sewerage" project dealing with the collection of sewage wastewaters in the town of Danilovgrad through the construction of a separate sanitary sewerage.

The main watercourse draining the Danilovgrad area is the Zeta river.

The implementation of the projects will ensure an improved water quality in the Zeta river into which wastewaters are drained at present without any adequate treatment process. The wastewaters will be brought into the new WWTP. The projects concept is based on the intention to protect the watercourse maximally from being polluted.

The designed activity realisation will form conditions for the infrastructure completion and will promote the development of the area concerned.

1.2. PROPOSED SCOPE OF WORKS AND EXPECTED RESULTS

The Contractor shall elaborate the documentation of the WWTP for the capacity of 12,000 PE with construction divided into two stages, and shall realize the WWTP for the capacity of 6,000 PE with individual structures realized in a scope specified in relevant descriptions of these structures.

1.2.1. Wastewater Production

The existing sewerage system will be partially replaced by sewers built as separate sewage system. Wastewater treatment plant is proposed for following capacity:

Stage 1 - design capacity 6 000 population equivalent

Stage 2 - distant future 12 000 population equivalent

The proposed solution for WWTP of 12,000 PE will be incorporated only into WWTP layout so as to make clear the location of each object in the future. The tender shall be resolved

03/12/18

mainly plant with a capacity of 6,000 PE. A vast majority of the wastewater collected from Danilovgrad is formed by sewage water, produced mainly in households.

1.2.1.1. Wastewater Volume

The determination of the volume of wastewater is based on the expected wastewater production of 150 L/capita.day. The wastewater flow rates, specified by the client, include groundwater inflow/infiltration. Design parameters can be found in the following table:

Table 1: Wastewater Production

	Design capacity		
	l/s	m^3/h	m^3/d
Average Dry Weather Daily Flow - ADF	10.4	37.4	898.6
Maximum Dry Weather Daily Flow - MDF	14.6	52.6	1,261.4
Maximum Dry Weather Hourly Flow - MHF	21.9	78.8	-
Wet Weather Flow - WWF	26.3	94.6	-

All the design flow will be doubled for WWTP capacity of 12,000 PE.
Internal recycles will be less than 1% of WWF.

1.2.1.2. Raw Wastewater Quality

The wastewater produced in the town of Danilovgrad has the characteristics of sewage water. The specification of its quality is therefore based on the Specific Contamination (SC), produced by the town's inhabitants, as summarized in Table 2.

Table 2: Specific pollution per capita

BOD_5	60	g/capita.day
COD	120	g/capita.day
SS	70	g/capita.day
TNK	11	g/capita.day
P	1,8	g/capita.day

Table 3: Design capacity - average annual value

BOD_5	360	kg/day	400.6	mg/l
COD	720	kg/day	801.3	mg/l
SS	420	kg/day	467.4	mg/l
TNK	66	kg/day	73.5	mg/l
P	10,8	kg/day	12.0	mg/l

All the design balance of pollution will be doubled for WWTP capacity of 12,000 PE.

At the time of startup of WWTP will be connected pollution from about 3,900 inhabitants. The amount of pollution and waste water flow will be as follows (the amount of storm water flow is not changed).

Table 4: Wastewater production- state at start up

	l/s	m^3/h	m^3/d
Average Dry Weather Daily Flow - ADF	6.8	24.3	584.1
Maximum Dry Weather Daily Flow - MDF	9.5	34.2	819.9

l 03/12/18

Maximum Dry Weather Hourly Flow - MHF	14.2	51.2	-
Wet Weather Flow - WWF	26.3	94.6	-

Expected minimum flow of waste water during startup will be about 4.1 l/s.

Table 5: Raw wastewater pollution - state at start up

BOD_5	234	kg/day	400.6	mg/l
COD	468	kg/day	801.3	mg/l
SS	273	kg/day	467.4	mg/l
TNK	42.9	kg/day	73.5	mg/l
P	7.02	kg/day	12.0	mg/l

1.2.1.3. Treated Wastewater Quality

River Zeta is recipient of treated wastewater. The river is located in sensitive area. Wastewater treatment process should include nutrient removal therefore. According the Law on Classification and Categoration of Surface and Ground water of Montenegro (in force since 1996) river Zeta water is classified along whole watercourse to the classes A1. S. I. Class A1 water can be used in its' natural state after disinfection for drinking purposes. class S water can be used for fish breeding and class I designate water suitable for contact recreation (bathing). In line with EU Directives. secondary and tertiary treatment at WWTP Danilovgrad shall achieve the following effluent quality:

Table 6: Effluent quality requirements

Parameter		
BOD_5	25	mg/l
COD	125	mg/l
SS	35	mg/l
Total Nitrogen (annual average value)	15	mg/l
Total Phosphorous (annual average value)	2	mg/l

UV disinfection of effluent is required in order to ensure the quality of receiving water (Zeta River) as a drinking water class A1.

1.3. AVAILABILITY OF EXISTING DOCUMENTATION

This Tender documentation has been elaborated upon the following reference design documentations:

- General design documents „Danilovgrad Wastewater Collection and Treatment". „Generalni projekat kanalisanja i prečišćavanja otpadnih voda Danilovgrada". Prepared by ENERGOPROJEKT-HIDROINŽENJERING ad, Novi Beograd, February 2008.
- "Spatial urban plan of the Municipality of Danilovgrad". Prepared by CEP-Beograd, MonteCEP-Kotor, Planet Cluster-Madrid (Spain) from 2014.
- Conceptual design „Danilovgrad Municipal Infrastructure, Danilograd WWTP". Prepared by VHS Brno, a.s., Brno, April 2014.

03/12/18

Existing design documentations are available for consultation in the Employer's office at the following address:
D.O.O. "Vodovod i kanalizacija" Danilovgrad
Street Address: Caja Scepanovica bb
City: Danilovgrad
Postal Code: 81410
Country: State of Montenegro

Tendereres are strongly recommended to study thoroughly all existing documentation before submitting their bids, as the Tender documents contain only relevant parts of the documentation necessary and sufficient for the design of a technical solution and work appraisal.

Tenderers are responsible for interpretation of data given in existing design documentations and in these Tender documents. Deficiencies, or extrawork resulting from insufficient study or incorrect interpretation of data, shall not be taken into account during the realisation.

1.4. GEOGRAPHICAL LOCATION

The Danilovgrad district is situated in the central part of Montenegro. The district area is located between 18°56´ and 19°18´ east longitude and 42°48´ and 42°45´ north latitude. The majority of the district territory is hilly or mountainous, a small part is formed by the Zeta river valley and its tributaries, i.e. Bjelopavlićka plain.

The Danilovgrad district territory covers 50,100 ha, while the size of the urban area included in the urbanistic plan is around 250 ha. The district is bordered by these districts: Podgorica in the south, Cetinje in the southwest and west, Nikšić in the west and north, and Kolašin in the northeast. The total length of the district border is 154.5 km.

The air distance of border points in the district in the north-south direction is 33 km, and in the east-west direction 29 km. The district covers 501 km^2, belonging to medium-size districts within Montenegro.

Geographical location of the district may be considered very suitable because it lays close to the country capital Podgorica, the royal town of Cetinje, and an important economic centre and second biggest town of the country Nikšić.

The location was considered favourable in history, too, in the early middle-ages important trade routes ran through this territory, in valleys of the Zeta and Morač rivers, along which the first urban settlements were founded: Duklja (Doclea) at the confluence of Zeta and Morač, Ribnica at the confluence of Ribnica and Morač, Martinićka Gradina on the Bjelopavlićka plain close to Spuž, Spuž fortress, and Onogošt on Nikšićko polje.

1.5. GEODETIC LAYOUT

1.5.1. Map and geodetic basic data

The following map references have been used for the elaboration of these Tender documents:

l 03/12/18

- Digital terrain model of the urbanistic plan
- Cadastral map

The map basic data are part of the existing design documentation specified in chapter 1.3.

1.5.2. Vertical and horizontal layout of the area concerned

The vertical and horizontal layout of the area concerned for WWTP is not available.

The Contractor's delivery shall include the elaboration of the vertical and horizontal layout of the area concerned for WWTP in the scope and detail required by relevant regulations.

When elaborating their bids, tenderers are obliged to take into account all risks resulting from the current condition of geodetic data.

1.6. GEOLOGICAL AND HYDRO-GEOLOGICAL DATA

1.6.1. Introduction

The engineering-geological survey of the area concerned for WWTP is not available.

The Contractor's delivery shall include the elaboration of engineering-geological and hydro-geological surveys of the area concerned for WWTP in the scope and detail required by relevant regulations.

The geological survey shall include field and laboratory tests (e.g. static and dynamic sounding, static loading tests, hydrodynamic tests determining hydraulic parameters of the rock environment, determination of strength, deformation, and technological properties of rocks, determination of workability classes, determination of chemical properties of water intended for construction purposes – aggressiveness to concrete, steel, etc.).

Expenses on this survey shall be considered to have been included in the tenderer's bid. The Employer shall not accept any expenses related to engineering-geological and hydro-geological surveys.

All data and values provided in this chapter "1.6. Geological and hydro-geological data" are informative only, helping tenderers in the elaboration of their bids. Each tenderer shall bear the responsibility for the proposal design.

1.6.2. Orographic and geomorphologic conditions

The Danilovgrad district territory extends from the Bjelopavlićka plain in the Zeta river valley to Old-Montenegrin karst plateaus in the southwest and to high limestone mountains and plateaus in the northeast.

Regarding topography, two basic complexes should be mentioned: flat country along the Zeta river and its tributaries, and mountainous terrains, both extending in the Dinaric direction (i.e. northwest-southeast).

Tectonic changes are most significant in the Plana region, in an area extending from the Zetsko-Bjelopavlićka plain to Nikšićko polje. Vertical division of the space is pronounced and elevation of the district ranges from 35 m in the Mareza river valley, 60 m at Glava Zeta,

03/12/18

1,436 m in Veli Garač (Milunova Bobija peak), 1,927 m in Prekornica (Kula peak), to more than 2,100 m in southern parts of Maganik.

A complicated lithologic system, tectonic activities together with fluvial, karstic, and glacial erosion, as well as anthropogenic effects had created the present relief of the Davnilovgrad district area.

A part of the district belongs to areas with average elevation 800-1,000 m, representing the lower part of the mountainous region of Montenegro, being a typical karst landscape, so-called "sharp rocky landscape" or "full karst" with developed surface and underground karst formations. Within this extensive limestone and dolomite area (Katunske grede), which gradually descends along the Dinaric direction towards the Skadar depression, the only places enabling settlement, agriculture and cattle breeding are ravines and larger basins formed in places where limestone meets less permeable rocks (dolomite and flysch). The highest features in this area are two massifs: Mali Garč, reaching height above 880 m, and Velji Garč with the highest mountain Milunova Bobija (1,436 m), towering steeply above the Bjelopavlićka plain. These massifs are divided by Dolovi pass at 675 m. The northeast slopes of Garač, in the Zagreda area, is formed by smaller mountainous plateau reaching to 300-400 m above sea level. In higher elevation, the Garač massif is covered with woods, while other parts are covered with lower vegetation.

In the valley forming the central part of Montenegro, where the Zeta and Bjelopavlićka plains, Nikšićko polje, and Duga pass are situated, the landscape structure is profoundly relief-feature. It descends and widens from northwest towards southeast and opens towards the Adriatic, from where the Mediterranean climates enters the country. The Bjelopavlićka plain with Nikšićko polje and Zeta plain are the lowest parts of Montenegro continental territory, separating the rocky plateau from high mountainous areas. The Bjelopavlićka plain is an extensive flat area along the lower course of the Zeta river, representing a tectonically predisposed depression of a rocky plain characteristics, 28 km long and 8 km wide, with the total area of 72 km2.

In the Pleistocene period, a lake was situated in this area, formed by sedimentation of strong quaternary sediments. The Bjelopavlićka plain morphology has three main forms: plain and alluvial plain, such as the valley part of the Zeta river and its tributaries; elevations in the valley bottom, representing the remains of the paleorelief; and the Zeta riverbed. The valley river bottom descends slowly from Glava Zete, with elevation 56 m, to the Brestica and Zeta confluence with elevation of 40 m. Limestone hills and points towers from the quaternary sediments in the Zeta river valley, as the paleorelief remnants. The most significant are Gorica between Kujava and Frutak (152 m above sea level), Kurilo and Orja Luka (270 m), Ćeranića glavica and Tulica near Danilovgrad (127 m), Spuška glavica (170 m), and a group of hills near Podglavica: Visočica (154 m), Maljat (127 m), Merat (100 m), and Dugačka glavica (70 m). The Zeta riverbed divides the plain to two almost identical parts, being mostly wedged into earthy and sandy quaternary sediments. In individual places the riverbed is wedged into limestone paleorelief remnants, but only on one its side, for example near Gorica in the Tvorila area, or at Čeranića glavica near Danilovgrad. The average width of the Zeta riverbed is 50 m, the biggest 90 m at Slap.

03/12/18

The right side of the Bjelopavlićka plain includes some river terraces, which did not develop during tectonic elevation, at Katunska rocky plateau (Katunska krška zaravan): Mareza, Zagreda, Bogetići, and Cerovo.

Between Prekornica and Ostroška greda, a limestone plateau is situated at the same elevation as the Katunska rocky plateau, containing ravines Dubravica, Jablan, Topolovo, Brajovićko, and Martinićko Gostilje, and numerous depressions.

The northern part of the district is formed by high mountains, Prekornica with the highest peak Kula (1,927 m), Maganik reaching over 2,100 m and Lisac (with 1,563 m high Bobija peak) in the south and southeast parts, and areas between them. Prekornica extends between the Gračanica valley, Nikšićko polje, Bjelopavlićka plain, and Morača and Maganik valleys. It consists mainly of limestone and dolomite, with profound karst erosion area with strongly rugged topography, with Srednja, Suva, and Brajovićka ponikvica ravines and numerous depressions situated between sharp ridges. The fragmented Maganik massif is situated in the northernmost part of the Danilovgrad district, and consist especially of cumulated limestone. The Štitovo plateau in the western edge of Maganik, with elevation 1,500 m, is rich with red bauxite deposits. South of Štitovo, a tectonically predisposed Gračanica (Nikšićka Župa) valley is situated, but only its eastern, the highest part belongs to the district. Lisac, extending in the north-south direction, represents a smaller limestone massif.

Regarding hypsometry, the most extensive are terrains with elevation 200 m above sea level, occupying 72 %, while terrains with elevation over 600 m above sea level occupy 56 % of the district area. Terrains with elevation below 600 m, having favourable climatic conditions, long-lasting vegetation season, abundance of fertile soil rich in water, belong to territories with permanent settlement. They occupy over 200 km2, which is 43 % of the district area.

Height zones represented in Danilovgrad district:

Elevation – height zones	% of territory
35 - 200 m	28
200 - 600 m	16
600 – 1000 m	21
1,000 – 1,400 m	20
over 1,400 m	15

Significant vertical division of the Danilovgrad district area caused also various terrain descending. The largest part is occupied by flat terrain with gradient up to 5 % (approx. 25 %). Terrain with gradient 5-10% occupies 23 % of the area, terrain with gradient 10-25 % occupies 19 %, with gradient 25-50 % approx. 21 %, and steep terrain with gradient over 50 % occupies as much as 12 % of the district area.

From the genetic point of view, several types of relief may be found in the district: karstic, fluvial-karstic, fluvial-denudational, fluvial-accumulative, and glacial.

03/12/18

The karst relief is characteristic with carbonate rocks, occurring mainly in a part of the Starocrnogorska zaravan (Old-Montenegrin plateau), and on and nearby the Garač mountain. This is a zone of "sharp" rocky landscape, or typical full karst. It prevails also in an area of high mountains and plateaus between them.

The fluvial-karstic relief is represented mainly by valleys and fluvial-karstic forms as the product of corrosion, erosion, denudation, and accumulation. The Bjelopavlićka plain, as part of a larger karst depression, is of s polygenetic origin, therefore it is predisposed and ahs the character of a karst plain. The fluvial-karstic relief is represented also in chalkstones of Prekornica and Maganik in the form of ravines, depressions, dry valleys, and fossil riverbeds.

The fluvial-denudational relief is represented in the Bjelopavlićka plain.

The glacial relief has been preserved in the area of high mountains and plateaus, represented in the district area by Prekornica and Maganik mountains and Štitovo plateau, in the form of cirques, glacial branches, unstaggered rocks, and moraine detritus.

Since the prevailing part of the Danilovgrad district area is formed by carbonate rocks, the most common are limestone-dolomite relief. Surface karst forms of this relief include: grikes, deep grikes, sinkholes and ravines, Underground forms include: caverns and abysses. Grikes of all types, or shapes, are found especially in Katunski krš, in Prekornica and Maganik. Deep grikes, which are larger than usual grikes, are found in the same areas as grikes. Sinkholes and ravines of all types and sizes, such as depressions in karst terrain, represent a common form of relief in karst areas of the district. They are usually related to places in which contact between rocks with different petrographic composition and hydro-geological functions had occurred, and extend mainly in the same direction as individual layers. Although the Bjelopavlićka plain has the character of a karst terrain, this type of terrain is not found within the Danilovgrad district. Caverns and abysses, as underground forms of the relief, are found over almost the whole district. They occur in places with fissures where limestone meets other rock types. Several dozens of caverns and abysses have been discovered within the district, out of which only a small number have been surveyed. It shall be pointed out, that these caverns and abysses are rather interesting from scientific point of view, because these are specific ecosystems offering new species, subspecies and varieties of especially entomofauna to be discovered. Numerous caverns and abysses situated in the Danilovgrad district have a hydro-geological function in the form of sinkholes, springs, wells and orifices. They occur in places with fissures where permeable and impermeable rocks meet, in beds of permanent water courses, and in paleorelief places under quaternary deposits.

Heterogeneous types of relief, their richness and representation in the area, make the natural and landscape values of the Danilovgrad district beautiful and special.

1.6.3. Hydrographical characteristics

There are several water courses in the Danilovgrad district, which flow – through Zeta, the biggest and most important of them – to the Adriatic. The Zeta river flows into the Morača river and then to the Skadar Lake, from which the Bojana river flows to the Adriatic.

03/12/18

The main hydrographical characteristics of the district are a large number of water courses and springs in the Bjelopavlićka plain and in hilly and mountainous areas along the plain edges, and a complete absence of surface water courses and larger springs in the Garač territory, and only several smaller water courses in the Prekornica area and southern slopes of Maganik which disappear underground after a short while and flow in the form of underground courses mainly towards the Bjelopavlićka plain.

The Zeta river is the main water course within the whole extensive region. It collects water from all other water courses and hydrological phenomena within the district, as well as some water from confluences located outside the district. As Gornja (Upper) Zeta it flows across Nikšićko polje, where it sinks, and as Donja (Lower) Zeta it reappears below Bogetić in the north-westernmost corner of the Bjelopavlićka plain. The Donja Zeta starts at Glava Zete, where it is formed by the confluence of Oboštica and Glava Zete, and then flows through the Bjelopavlićka plain south-eastwards 51 km before it confluents with Morača. Its average width is 45-50 m, the biggest width 90 m at Slap.

The drainage area of the Zeta river is 1,215.8 km^2 and average precipitation in its drainage area 2,387 mm/year. The drainage area of Oboštica and Glava Zete is 1,050 km^2 and of Donja Zeta 620 km^2, which means that the total drainage area of the Zeta river is 1,670 km^2.

The average value of Zeta's annual flow in Danilovgrad area is 78.49 m^3/s. When taking into account average annual flow in Podgorica station on the Morača river downstream from the confluence with Zeta (161.90 m^3/s) and in Zlatica station on the Morača river upstream from the confluence with Zeta (58.55 m^3/s), the resulting Zeta average annual flow in its confluence with Morača is 103.35 m^3/s.

The highest average monthly flow is in December (134.69 35 m^3/s), while the lowest in August (15.04 m^3/s). The water level in the Zeta river and its tributaries changes throughout the year. The highest level is during the heaviest autumn rains, a little lower it is in the early spring with snow thawing. In summer, the water level decreases significantly, some smaller courses even dry out. The highest level ever recorded at the bridge in Danilovgrad was 46.25m (8 Nov 2000), and the maximum flow 463.0 m^3/s. The lowest water level was 33.97 m (5 Aug 1984).

The right-side tributaries of the Zeta river are Dobrun, Svinjički I Milojevića springs (S. and M. Vrela) and occasional water courses Smrdan, Gračanica, and Sušica. Left-side tributaries are Vidoštak, springs in Mandiči, Belanovića vir, Dobro Polje spring, occasional water course Sušica, Viško vrelo, Tamnik, Vrela Bogićevićka, Morava, Buk, Ljutotuk, Rimanića stream, Brestica, and Iverak.

With intensive precipitation during the rainy season, groundwater in some parts of limestone-dolomite terrain along the plain edges accumulates in significant quantities. Sudden discharge of this occasional as well as stable water to the surface causes increase of water level in rivers and floods in areas situated along these rivers. The length of flooded areas (around 500 ha) along the Zeta river is 25 km. The Sušica river floods an area of 150 ha, 5 km long. The Rimanić stream floods an area of 50 ha, 5 km long. Floods around the Zeta river are heavy in a location called Dobro Polje and below the Kujava village, because the river has very low banks here. In the urban area of Danilovgrad, both upstream and

03/12/18

downstream from the existing bridge, the Zeta river floods low-situated areas along its left bank. Further it floods a depression on its right bank, close to the Ćurilac settlement, downstream from Danilovgrad. Other tributaries cause floods, too, such as Mlinštak brook, flooding more extensive areas.

High average precipitation, geological composition of the ground and its configuration are the main aspects for forming marshes which are highly abundant in the flat country. In autumn, winter and spring the ground gets over-saturated with water, which prevents it from being cultivated.

Apart from floods, the Zeta river also undermines its banks in some parts. This is rather frequent in urban areas of Danilovgrad and Spuž, especially in places with banks made of loose materials and hence susceptible to erosion. In some parts the banks keep collapsing in a large extent (Dobro Polje, below Glava Zete).

The existence of a small lake in the Srednja Ponikvica settlement should be mentioned. The lake is formed in a depression in the northwest part of the settlement and is fed with waters from eastern slopes of the ravine. It is important regarding water supply to surrounding settlements and increasing the landscape value, and it is also the only mountain lake in the district. It may be threatened especially by eutrophication.

An artificial lake was formed on the Zeta river at Slap by the construction of the "Slap Zete" hydraulic plant. It serves especially for energy purposes, but is also important for leisure activities and for balancing the flow.

Hydrological documents for the Zeta river at Danilovgrad water-meter station, obtained from the Hydrometeorological Institute of Montenegro for 1948-2001, indicate that the lowest flow during the period monitored was recorded in 1956 (4.68 m^3/s), then in 1984 (4.77 m^3/s), in 1965 (4.9 m^3/s), and in 2000 and 2001 (5.58 m^3/s).

The highest flow during the period monitored was recorded in 2000 (577.0 m^3/s), then in 1966 (550.0 m^3/s), in 1965 (544.0 m^3/s), in 1964 (491.0 m^3/s) and in 1994 (480.0 m^3/s).

1.6.4. Geological characteristics

Neotectonic characteristics of Montenegro

An important role in the structural-tectonic forming of Montenegro terrain was plaid by processes and tectonic activities occurring from Neocene until the preset times. In the Miocene period, the majority of the inner Dinarides was covered by the Pannonian Sea and it is in these places where Neocene sediments are to be found.

The highly accurate present measuring shows that some parts in the Dinarides, Albania and Italy somewhat diverge. These movements have been causing permanent tectonic activities of the continental, but especially submarine parts of Montenegro, resulting in earthquakes exceeding 5 Richter degrees. The neotectonic activities undoubtedly affect the Danilovgrad district area.

1.6.5. Geological composition of the terrain

Regarding the stratigraphic and lithologic characteristics, there are three types of terrain:

l 03/12/18

Mesozoic carbonates are represented especially in hilly and mountainous parts of the district, and also in the Zeta river valley, or riverbed, up to the highest peaks. They are found in the northeast part of the district at Prekornica and Lisac, in the southwest part in the Velji and Mali Garač area. The Mesozoic carbonates are composed especially of grey-white, grey, and grey-yellow limestone, dolomite limestone of the Triassic, Jurassic and Chalk periods.

Paleogene sediments are represented in some parts of the Zeta riverbed and banks. In large formations they may be seen as strip, e.g. at Zagorak, Frutak and Tvorila, in areas around Pješivci, in the south-west part of the district, and around Bare Šumanovića, Vinići, Brijestovo, Slatina, Glizica, Donji Martinići, Piper, and in the north-east part of the Bjelopavlićka plain. Further they are represented in a large extent in the zeta river valley, visible in the terrain only in places where Paleogene sediments got to the surface through quaternary deposits, such as near Spuž. They are grey, bluish, and red marls, soils and sandstones.

Quaternary sediments are represented in the Zeta river valley bottom, but they cover also high carbonate terrain. Loamy, loamy-sandstone and sandstone sediments, limestone limnic sediments, alluvial sediments, terrace drifts, deluvial sediments and facies of dead branches are represented in the Zeta riverbed.

Regarding granulometric aspects, the finest material is deposited downstream from the edges of the Bjelopavlićka plain in which there used to be a lake. There is over ten metres of this material in the central parts of the "dale" bottom. Glacial and fluvial-glacial sediments are represented in smaller areas in higher parts of the terrain: Studeno, Topolovo, Ivanj ubao, Borov Do, Poljica, Gostilje, Rujišta, Štitovo and other places.

1.6.6. Engineering-geological characteristics

The geological environment of the Danilovgrad district area is characteristic with the terrain stability, rock bearing capacity, and according to the conditions for the construction divided to three groups:

Consolidated rocks are represented by two subgroups.

The first subgroup consists of stony carbonate rocks, most common in the district. They are found on slopes and smaller hills in the zeta river valley. They are limestone and dolomite, carbonate, firm and well-petrified rocks with high strength and stability which, thanks to their resistance to pressure and slipping, form stable terrain suitable for surface construction. Thanks to the properties mentioned they have high bearing capacity even in steep terrain. However, rocks with lower bearing capacity due to surface disintegration may be found.

The second subgroup consists of rocks of the Paleogene lithologic complex. They are characteristic with significant changes in engineering and geological properties. Marls, primarily dry and not disintegrating, have a good bearing capacity and make the terrain stable. If located on larger slopes or in eluvial zones, they may have strongly unfavourable engineering and geological properties such as low bearing capacity, terrain instability, and proneness to erosion effects, which may result in earth-slides of various extent. Earth displacements were observed in zones with flysch damaged by erosion around building structures and especially under crushed limestone.

03/12/18

Semi-consolidated rocks are formed by soils. The soil occurrence affects the groundwater movement and content. Soils are hydro-geological insulators and may contain large quantities of water. With a higher content of water, the soil bearing capacity decreases. They are prone to erosion effects. With the exception of boggy sediments, soil has the lowest bearing capacity of all rocks in natural conditions. They are most frequent in areas with gradient up to 5°, where they form a stable environment for adequate loading and construction of smaller building structures for which earth settlement is not an important aspect. Unpetrified, plastic soils with various physical and chemical structural properties are practically impermeable.

Unconsolidated to semi-consolidated rocks are formed by a lithologic quaternary complex, especially in the form of soils and sandstones. These are fine-grained, plastic sediments and consolidated unpetrified rocks with various physical and chemical properties. They usually permeate water only slightly or not at all .Since they occur in flat parts of the district, they create stable conditions for construction. They may be expected to have highly varying bearing capacity due to the composition of sediments and groundwater occurrence.

In some parts of the area, consisting of semi-consolidated and unconsolidated rocks, it is necessary to secure excavations against backslide, especially when the rock mass contains water. Further, excavations shall be drained at a high groundwater level or heavy precipitations. In any case, a geotechnical survey of the location concerned shall be executed so that data on engineering and geological properties are absolutely accurate.

1.6.7. Hydro-geological characteristics and phenomena

The most common sources types in the Danilovgrad district area are karst springs, situated according to the hydro-geological division of Montenegro in the area of "Karst fields, plateaus, and high mountains (Visoki krš and part of the Durmitor tectonic unit [Durmitorska tektonska jedinica])". Within the area of this extensive typical karst territory, numerous sources of karstic spring water are situated in the form of springs, orifices, and effluxes along the edges of karst fields and river valleys. The largest part of the Danilovgrad district belongs to a karst terrain with highly complex and partly undetermined directions and effluent modes. For the Plana territory, springs bordering the district territory are also important, and are connected to it hydro-geologically. Also sources formed within the quaternary glacial-fluvial and alluvial sediments are of significant importance.

The Old-Montenegrin plateau (Starocrnogorska zaravan) source is situated between the drainage areas of the Bay of Kotor (Boka Kotorska), Crnojevića river, and Nikšićko polje, and wells out through numerous occasional and permanent springs and orifices in the western edges of the Bjelopavlićka and zeta plains, the most important being Drenovštički izvori: Svinjačka and Milojevićka vrela, and Dobrik. It is assumed that the drainage area of these springs is around 120 km^2. Ground waters in this drainage area flows globally eastwards. It is possible that some water of the Oboštica drainage area occasionally flows towards Drenovštički izvori. Hydrometric measurements showed that the minimum yield of these springs (without Dobrik) is 253 l/s.

l 03/12/18

Zeta's tributary Gračanica is formed from springs situated below Pješivački Dol. The Šarena ploča orifice is located in the Gračanica riverbed at the bridge, and an orifice zone downstream. When Gračanica stops flowing due to a low water level, some water from Zeta begins to flow upstream through the riverbed and sinks in open limestone channels.

The Sušica river wells out below Dubrava Zagredska. At high water level, it is fed from numerous springs and orifices in its riverbed. The most yielding one is Modro oko, situated most upstream, which dries out completely in summer. Along its riverbed, Sušica is occasionally fed from Grgurovo and Šabovo oko, from a spring by Petra Šunjina bridge, from Podžgajska and Oraška jama. The most important occasional source of the Sušica river is the Oraška jama orifice. With its yield and favourable location it is the most important source for supplying the Bjelopavlićka plain with water. The Oraška jama drainage area includes the Garač massif and territory westwards from it up to Čevo, formed completely by Mesozoic limestone, where underground karst channels of large dimensions are situated. The only occasional source in the Pipersko lokanje drainage area above Zagreda, an the only permanent and most yielding source is Orlujina. The karsting process got deep under the Zeta river valley, due to which large accumulations of groundwater were formed under Garač. Surveys proved the presence of an underground course between the river sinking at Čevo and at Oraška jama, and the air distance between them is around 14 km. Water moved through the underground channels at 5.34 cm/s. Generally, water moves in the underground channels westwards. The Oraška jama spring and the water level in the dry season show that there is a large groundwater accumulation, because even with pumping of 125 l/s during the dry summer season no significant decrease of the water level occurred.

South of Oraška jama and Podžgajska jama, the Vučji Studenci drainage area is situated. These, together with Modro oko and Baločka pećina, form parts of the Matica river springs, which flows to Morača at Botun. An obituary of Matica is the Crkovnica river which is fed from a permanent source Kraljičino oko and Crno oko. Kraljičino oko, together with the Mareza spring, is the only more yielding permanent source in this part of the district. Underground courses of Daljm and Zorski lug flow towards Kraljičino oko at the rate of 2.15 km/day.

The karst source of the Mareza river is drained by gravity through a number of springs. Neither the Daljam and Zorski lug territory nor Garač belong to the Mareza drainage area. Water in its drainage area is expected to flow generally from north to south. The only known fact is that this is a large and deep groundwater accumulation. Previous surveys did not prove reliably where the drainage area of these springs is situated, although an analysis of hydrological data indicates that this drainage area may be situated within the Prekornica karst area. However, this has not yet been proved by tests.

The source of the Rudin, Zla Gora, and Njegoš areas includes a large karst territory without any surface effluent and with rare and occasional springs. The effluent is provided partly by the spring of Donja Zeta.

A permanent, more yielding left-side source furthest upstream of the Zeta river are Rožačka vrela. In Bjelanovića vir, on the bottom of the Zeta river valley, so-called Bjelanovića vir is situated, a rare hydrological phenomenon which sometimes changes to a spring or even river

03/12/18

sinking. It has been entered in the expert literature as an example of a new definition of orifice.

The source of the Žurim and Štitovi massif includes an extensive karst area east of Nikšićko polje. This karstic fissure-type of spring is drained through Dobropoljski springs, which was confirmed by colouring the water sinking in a place called Bare Bojovića. These springs are yielding even during the driest season, at a higher water level they get flooded by the zeta river.

The Prekornica massif source: The drainage area of this source is situated northeast of the Bjelopavlićka plain within the Prekornica massif. It is drained through a number of yielding springs along the north edge of the plain: springs of the Sušica river in Mijokusovići, Viško vrelo, Tamnik, and Lalevićko vrelo. Of a special significance is the system of Slatinski izvori, water from which is used for the Danilovgrad water supply system, the first to have been constructed in Montenegro.

Podgajska jama, Lakića jama, Vujića jama, Brajovića jama, Žarića jama, Vukovića jama, Straganičko oko and other springs drain the northeast part of the Zeta river valley.

Groundwater of the Bjelopavlićka plain alluvium are of a local significance. Soils and sandstones are only slightly porous, hence their yield is low.

An important aspect of the water quality and protection is, that the hilly and mountainous karst territory of the district contains no structures and no activities dangerous for the environment, especially soil and groundwater.

Of a considerable significance for the Danilovgrad district are also hydro-geological phenomena in Nikšićko polje, where the Zeta river and other courses sink and later reappear in the northwest part of the Bjelopavlićka plain.

1.6.8. Fluctuation of groundwater level

The Contractor's works shall include also the execution of an engineering-geological survey, incl. a hydro-geological survey, in order to obtain knowledge about the occurrence of water underground, and permeability of soils and rocks.

The hydro-geological survey of the area concerned shall be executed in a required scope and detail in compliance with relevant regulations, focused especially on:

- Course and fluctuation of groundwater level.
- Verification of physical and chemical properties of groundwater.
- Assessment of groundwater aggressiveness to steel and concrete structures according to valid legislation.

1.7. CLIMATIC CONDITIONS AND SEISMICITY

1.7.1. Climate

The southern part of the Montenegro and the Zetsko-Bjelopavlićka plain has Mediterranean climate. Hot dry summers and relatively mild rainy winters are typical for this area. January

l 03/12/18

temperature is lower in Danilovgrad than in coastal locations at approximately same latitude, while summer temperature is little higher. This is typical especially for the extensive valley of the Zeta river with the highest summer temperatures within the whole country. The reason for this is a very clear sky during summer, heating the earth and air above it.

In mid-July 2007, a hot dry air from Africa reached this territory, bringing extremely warm weather all over the Balkan Peninsula. On 18 July, the absolute maximum temperature was measured in Danilovgrad ever since it had been recorded: 42.2 °C. Until then the highest temperature recorded had been approx. 10 °C lower.

There are numerous meteorological station all over Montenegro, performing permanent measurements and monitoring all parameters since 1949. According to their purpose, these stations are divided to three groups: main or synoptic, climatologic, and rainfall stations. There is one meteorological station in Danilovgrad area.

1.7.2. Rainfall

Upon monthly measurements from 1955 to 2005 it may be stated that there is a high unevenness in rainfall in individual years. On an average, the lowest rainfall is in summer months (June, July, August), while the highest rainfall is in the winter season (November, December, January). An average number of days with rainfall equal to or higher than 0.1 mm is 13.6 in November, 12.8 in December, and 11.9 in January. The lowest number of such days is in July – 6.0. The following table shows specification of the average rainfall intensity in 1955-2005 upon data from the Hydrometeorological Institute of Montenegro.

Month	Jan	Feb	March	April	May	June	July	Aug	Sep	Oct	Nov	Dec
Rf (mm)	20.8	20.3	17.2	15.8	10.9	10.0	9.3	13.5	20.5	24.9	25.1	23.3

The data show that the rainfall intensity is higher in cold winter months than in warm summer months.

According to data from a meteorological station in Danilovgrad, the maximum daily rainfall in 1995-2005 was between 76 and 250 mm.

1.7.3. Seismic characteristics

The Danilovgrad district seismicity is influenced mainly by numerous autonomous seismogenic focuses in Montenegro as well as by a high number of seismogenic zones within the western Balkans, especially those situated in southern Croatia, eastern Herzegovina, northern Albania, southern and south-eastern Serbia. Seismic territories with a significant activity within Montenegro are the seismogenic zones around Ulcinj and Bar, Budva, Brajić, Boka Kotorska, and also area around Berane, the whole area around the Skadar Lake, Maganik, etc.

A temporary seismologic map recording the past 500-year period and containing the expected maximum earthquake intensity in conditions of the so-called firm earth surface, is

03/12/18

the result of elaboration of all available data on seismicity recorded within Montenegro and its surroundings. The prevailing period is from the early 20th century to late 1984, and effects of determined potential seismogenic focuses within the territory. The map contains also all relevant information on destructive and catastrophic earthquakes within the wider area from the Middle ages to the present times. According to this map, the district area belongs to a zone with possible earthquakes of 8 Richter degrees.

Data in the seismo-tectonic map with mechanisms of focuses of stronger earthquakes in last 30 years indicate that the Danilovgrad district area has been under the significant influence of seismic activities occurring in the zone around the Skadar Lake, Primorje. There have been also earthquakes recorded near the town of Podgorica, in the Morač canyon, in Nikšić, and in the Maganik zone. Seismogenic landslide, or a fissure extending through the Bjelopavlićka plain along its length, is also obvious. A little smaller fissure runs from Nikšić through the Nikšić county to Maganik peaks.

In 1984, special maps of seismic hazards were elaborated. The seismic hazard, expressed by parameters of the maximum expected earthquake intensity and the maximum horizontal ground acceleration, was elaborated for three past time periods: 50, 100, and 200 years, with the probability of an event realisation of 63 %. The hazards parameters were calculated for the level of so-called basic rock, or firm ground.

In compliance with new trends of present project codes, such as "Eurocode 8", it is recommended for map elaboration to use the probability of non-exceeding 10 % in 50 years, or for the period of past 475 years, and consequently it is recommended to harmonize the national code in the project area in conditions of seismic danger.

Apart from the above-mentioned, in connection with natural phenomena accompanying earthquakes, it is important to innovate existing maps of potential landslides and slope movements caused by seismic events. Even more important it is to define the hazards from soil liquefaction occurrence, recorded in many places during the destructible earthquake of 1979.

New data on the seismic hazard in Montenegro have appeared due to the need and as the result of the definition of ore reliable bases of the seismic hazard for past 475 years ("Eurocode 8"), with the realisation probability of 70 %, using the spatial seismic approximation method. The results of the calculation of hazards is expressed in the form of a values of the maximum expected horizontal ground acceleration in conditions of the basic rock.

The seismic hazard with parameters of ground intensity and acceleration on the basic rock, with the realisation probability of 63 %, showed by the previous spatial plan for the Danilovgrad district, for the past 50 years was 7.5 Richter degrees and a(g) = 0.114; for the past 100 years was 8.2 Richter degrees and a(g) = 0.169; and for the past 200 years it was 8.8 Richter degrees and a(g) = 0.252.

The basic values of seismic parameters within the Danilovgrad district area may reach even 9 Richer degrees in quaternary sediments, due to the high level of groundwater in the Bjelopavlićka plain.

l 03/12/18

The seismic activities, especially those with high intensity, may lead to a number of consequent hazards: liquefaction, ground sinking, ground movements, landslides, changes in the groundwater level.

1.8. POPULATION

1.8.1. Present situation

According to records from 2011, the population of the Danilovgrad district is 18,472 inhabitants, out of which 6,892 live in towns.

Although the Danilovgrad district, economically the most developed part of the central region of Montenegro, belongs to developed centres as Podgorica and Nikšić, it has experienced migration of its population from mountainous parts towards Danilovgrad as the district centre, and also towards towns in the flat country – Nikšić and Podgorica. However, it has also experienced a certain influx of inhabitants from less developed northern parts of the country.

The economic situation, conditioned by political situation and transformation of the society, decreased the living standard of the population, which has lead to even more profound demographic changes. A large number of refugees and displaced persons have moved here.

There are 80 settlement within the Danilovgrad district. According to functional, spatial, and demographic characteristics these settlements are divided to three groups:

- Bjelopavlićka plain with settlements at elevation around 200 m, including the towns of Danilovgrad and Spuž, and villages of Begovina, Bileća, Bobulja, Bogićevići, Brajovići, Braćani, Veleta, Viš, Vučica, Gorica, Gornji Martinići, Gradina, Grbe, Gruda, Dabojevići, Daljam, Donje Selo, Donji Martinići, Donji Rsojevići, Župa, Zagorak, Jabuke, Jastreb, Jelenak, Klikovače, Kopito, Kosić, Kujava, Lazarev Krst, Lalevići, Livade, Malenza, Mijokusovići, Novo Selo, Orja Luka, Pitome Loze, Povrhpoljina, Podglavica, Požar, Potkula, Rošca, Sekulići, Sladojevo Kopito, Slap, Strahinići, Tvorilo, Ćurilac, Frutak i Šume, altogether 51 settlements.
- Settlements in hilly areas including places with elevation 200-600 (650) m: Bare Šumanovića, Boronjina, Brijestovo, Vinići, Gornji Rsojevići, Do Pješivački, Drakovići, Đeđezi, Đuričkovići, Zagreda, Jovanovići, Kupinovo, Lubovo, Mandići, Miogost, Mokanje, Mosori, Musterovići, Podvraće, Potočilo, Ržišta, Slatina, Sretnja, Ćurčići i Šobaići, altogether 25 settlements.
- Settlements in mountainous areas with elevation over 600 (650) m: Gostilje Brajovićko, Gostilje Martinićko, Dolovi i Poljica, altogether 4 settlements.

The following table shows the real population size given in the document "First results, Census of Population, Households and Dwellings in Montenegro" prepared by Statistical Office of Montenegro in May 2011:

	Population	Households	Dwellings
Danilovgrad	17,678	5,497	8,208

03/12/18

Urban	6,892	2,069	2,593
Other	10,786	3,428	5,615

1.8.2. Prospective situation

Data on the prospective population size are based on the study "Elaboration of a strategic regional plan for sewerage and wastewaters in the central and northern parts of Montenegro" from 2004, as well as on data from the 2007 study "Regional plan of the Danilovgrad district". These data were analysed for 2007, 2020 and 2030.

From the above-mentioned documents it may be implied that the population size shall increase in the following period, by 1 % in towns and by 0.5 % in rural areas.

Location	Population 2003 (records)	Average annual rate of population increase	Expected population size		
			2007	2020	2030
Danilovgrad (town)	5,188	1.00 %	5,398	6,144	6,788
Gorica	142	0.50 %	145	155	162
Zagreda	222	0.50 %	226	241	254
Urban areas total	5,552		5,769	6,540	7,204
Rural areas	10,819	0.50 %	11,037	11,776	12,378
Danilovgrad district	16,371		16,806	18,316	19,582

The following table shows the population size given in the study "Elaboration of a strategic regional plan for sewerage and wastewaters in the central and northern parts of Montenegro":

Town / year	2010	2020	2030
Danilovgrad	5,407	5,972	6,597
Gorica	147	154	162
Zagreda	229	241	253
Urban areas total	5,783	6,367	7,012
Rural areas	11,185	11,752	12,353

03/12/18

Town / year	2010	2020	2030
District total	16,968	18,119	19,365

The following table shows the population size given in the document "Spatial urban plan of the Municipality of Danilovgrad" prepared by CEP-Beograd, MonteCEP-Kotor, Planet Cluster-Madrid (Spain) in 2014:

	2011	2020
Danilovgrad	18,472	21,502
Urban	6,852	8,319
Other	11,620	13,183

1.9. EXISTING INFRASTRUCTURE CONDITIONS

1.9.1. Potable water supply

The Danilovgrad district is among the best districts in terms of potable water supplied through the public water supply system.

This is mainly thanks to the extensive Danilovgrad, or Bjelopavlićka, water supply system, which includes the whole flat area from Glava Zete in the north to Grbe and Daljam in the south. This system supplies over 30 locations within the district, i.e. 80 % of the district population in total. Further, there are water supply systems constructed jointly with neighbouring districts as well as small village systems.

Water supply for the remaining population in locations without water supply systems (mainly in hilly areas) is provided, or may be provided, only using tanks. On western slopes of the Bjelopavlićka plain there are virtually no sources which could be utilised for the construction of rural water supply systems. Eastern slopes contain some smaller sources (springs) above Martinić and below Ostrog.

The Bjelopavlićka water supply system is fed from seven sources with the minimum capacity of 360 l/s. All these sources are interconnected and form a unified water supply system.

In connection with these data it could be assumed that the capacity of the Bjelopavlićka water supply system is more than sufficient, even when requirements of large consumers (consuming around 55-60 % of water) are included.

However, the situation is not satisfactory in the summer season. Some marginal locations, or some branches of the system, are not regularly supplied with a sufficient quantity of water. Besides technical reasons, such as deficiencies of the existing water supply system, this is

03/12/18

due to impermissible water losses caused not only by undesired discharge of water but also by illegal drawing of water through anonymous connections, faulty water meters, etc.

The lack of water is frequently caused also by enormous consumption for watering gardens and orchards, which is non-purposeful use of water.

The water piping is of various age, from 1 year to as many as 115 years, made of various materials in 50-300 mm diameters.

Occasional shorter or longer periods with lack of water, especially in the summer season, are caused also by small capacities of reservoirs (around 2045 m^3).

1.9.2. Rainwater and sewage water collection

The only water supply system constructed in the district (and only partially) serves the town of Danilovgrad. This system has been constructed gradually and inconsistently. First the storm-water sewerage was constructed for collecting waters from some regularly flooded parts of the town and draining them to the Zeta river. Then neighbouring buildings were connected to this system. This practically sanitary (or combined) sewerage currently covers only the town centre.

In other locations of the district, household sewage waters are disposed of through septic tanks and soakways. No relevant data on their pertain are available, but it is assumed that problems may occur in flat areas, especially on the right bank of the Zeta river with loamy ground with low seepage. An advantage of this situation is that all such cases are individual solutions and small households with very efficient use of water.

On the left bank of the river and especially in a permeable zone, septic tanks and soakways function well, as well as in hills around flat areas formed by limestone.

Military structures (barracks) are equipped with their own sewerage system with a WWTP, discharging into the Sušica river.

All current production plants situated along the Zeta river from Pažić to Grbe are equipped with their own sewerage systems. These systems are usually constructed separately for sewage, technological, and storm waters.

Technological wastewaters at "Mermer" contain only inert particles of stony dust. They are discharged directly to the Zeta river, causing local turbidity which shall be eliminated. Further, the issue of sewage water disposal shall be dealt with.

Plants on the left bank of the Zeta rive, i.e. Fabrika kreča (lime works), Fabrika stanova (construction of flats), and Ciglana (brick works), are currently out of operation, thus they generate no technological waters, and sewage waters are disposed of in septic tanks.

1.10. PROTECTED AREAS AND PROTECTION ZONES

When elaborating their bids, tenderers are obliged to take into account all risks resulting from the significance of the project area in terms of the protection of the environment and landscape.

03/12/18

1.11. HEALTH PROTECTION AND WORK SAFETY

All works shall be executed strictly in compliance with current legislation of Montenegro.

Works shall be executed under full operation of the sewerage systems. All responsible persons and workers directly participating in the works shall strictly observe all health protection regulations and shall not promote any efforts to simplify work activities if it could present risks to their own or other workers' health. Caring for safety and health protection is an equivalent and integral part of the preparation, planning and execution of work tasks.

Prior to the work commencement, the Contractor is obliged to prepare the "Work safety and health protection plan". The Contractor is obliged to execute all works in compliance with this plan and to observe directions of the Employer's authorised person regarding health protection and work safety.

The Contractor shall pay attention to certain activities related to increased injury risks for Contractor's workers, Employer's workers, and the public. The following activities present serious danger to health, therefore measures for reducing this danger shall be taken:

- Excavation work (sheeting preventing soil sliding, underground work, fencing and enclosures, warning signs for pedestrians).
- Work at heights (falls, falling materials).
- Enclosed spaces (lack of oxygen, harmful gases/vapours/fumes, explosive gases).
- Work executed on public communications (traffic, pedestrians).
- Lifting heavy loads (suitable equipment, stable base, qualified driver/load binder).
- Works interfering with other Contractor's activities (existing operation and equipment).
- Storing, handling, using hazardous substances (chemical/explosive substances).
- Controlled handling of waste materials.

Prior to the commencement of any risk activity specified above, the Contractor shall submit a Safety/Methodical statement to Engineer for approval and commence with works only after receiving the Engineer's written approval recorded in the building log.

Prior to the work commencement, all workers shall be trained, during the work execution they must be under adequate supervision.

The whole construction site and temporary works must be suitable for the activities performed and shall be thoroughly checked prior to the work commencement by the Contractor (especially by a safety engineer) and Engineer.

After concluding the Contract, the Contractor shall appoint a **Safety engineer** as specified by relevant regulations who shall be responsible for the observation of safety rules during the whole construction. This person must be qualified for the execution of the function and authorised to issue regulations and take actions to prevent work injuries. The engineer's name shall be notified to the Employer's and Engineer prior to the work commencement.

The safety engineer (if there is a group of Contractors, one engineer per each Contractor) shall be responsible for work safety and health protection during the whole construction (if

03/12/18

there is a group, according to a written agreement submitted to Engineer regardless the fact whether the main Contractor or subcontractor, contracted within this Contract by the main Contractor) are present on the construction site concerned.

The Contractor's safety engineer shall participate regularly in site meetings at which he shall present information on the results of regular inspection of the site. He shall record this activity in a separate log which shall be part of the Contractor's documentation.

The Contractor shall provide Engineer with detailed written information on every accident without any unnecessary delay. An internal record shall be made about every accident, signed by Engineer and Contractor (safety engineer), and filed to Engineer's documents. Upon the occurrence of any injury, the Contractor shall immediately inform appropriate authorities.

Engineer may ask the Contractor to exclude from the construction site any person employed for the work execution, if this person's behaviour presents hazards to safety and health of other persons or to the environment.

No part of the construction site marked "No unauthorised access" may be entered without "Work permit". Places containing active and functional mechanical-technological, electrotechnical or chemical equipment, and all operated sewers, manholes, and chambers shall be marked with this instruction. The Contractor may not allow any of his employees or subcontractors to enter such places until they are permitted to do so. Should the Contractor require such permission, he is obliged to inform Engineer seven days in advance. Engineer shall then arrange the permit to be issued by a relevant authority. The Contractor shall keep the permit for the whole time of its validity, before returning it to Engineer. By observing conditions of such a permit the Contractor is not acquitted of his duties resulting from the Contract.

When dealing with injuries, the following relevant measures must be taken:

- First aid provided (dressing material, etc.) by personnel trained to do so.
- Injured person transported to a casualty/emergency ward of the nearest hospital.
- Relevant authorities notified as required (police, fire department).

The Contractor shall provide necessary monitoring equipment required for accessing areas with hazardous or potentially hazardous environment. The Contractor shall execute monitoring of all environments with hazardous or potentially hazardous atmosphere and keep records of the monitoring.

The Contractor shall provide necessary equipment for rescue works; this equipment shall be regularly checked and maintained. Records on the equipment controls must be kept on the construction site. The Contractor shall ensure that a sufficient number of his employees are fully trained for the use of breathing apparatuses and for rescue procedures.

Personal protective equipment must be available, as specified in valid regulations, which shall be used if necessary:

- Protective helmets

ℓ 03/12/18

- Protective goggles
- Ear protectors
- Protective gloves
- Protective footwear
- Reflective jackets

Adequate sanitary facilities shall be available, containing at least:

- Potable water
- Toilets
- Sinks with hot water, soap and towels
- Clean/dry/warm space equipped with table and chairs suitable for eating

1.11.1. Working hours

Working hours shall be determined in compliance with valid legislation and annex to the tender bid. During public holidays or bank holidays work may be executed only exceptionally and only with the written approval of Engineer and other potentially concerned parties. The Engineer's approval is not required for situations related to saving lives or property, or to securing works; in these cases the Contractor shall only send a note to Engineer.

Should the working hours be extended in any way due to any reason, no salary shall be paid for the extended time. The Contractor shall observe all relevant provisions of Labour Code and ensure that all specified control activities are executed properly as during normal working hours.

1.12. CHARGES FOR DISCHARGING WASTEWATERS TO SURFACE WATER

Charges for discharging wastewaters to surface water from the existing sewerage during the construction in amounts exceeding the quantity specified in the decision shall be paid by the Employer.

The other charges for discharging wastewaters to surface water during the construction (lowering the ground water levels within the construction site) shall be paid for by the Contractor.

1.13. OFFICE SPACE

From the day when execution of this Contract is commenced, to the day when the Contract with the Contractor is concluded, and from the day when the trial operation is completed, to the day when the execution of the Contract is completed, the Engineer shall be provided with a furnished office (min. 15 m2) for his disposal upon retribution with the Contractor agreed upon with the Employer (including expenses on electric power, heating and cleaning, water and sewage charges). **The office shall provide Employer.** The retribution shall not include expenses on printing and copying and telecommunication fees (local and international). From the day of the construction work commencement to the day of the trial operation completion, the Contractor shall be responsible for securing the Engineer's office.

03/12/18

1.13.1. General equipment to be provided by the Contractor during the construction period

The Contractor shall provide, maintain, store on the construction site, and make available for the Engineer representatives advanced measuring devices intended for the control of executed construction works.

No.	Device name	Quantity
1	Notebook - 17" 1920 x 1080 (Full HD), Intel Core i7, 8GB RAM, HDD 1TB, AMD Radeon HD 8870M (2GB), 4x USB 3.0, DVD±RW, wireless laser mouse, OS Windows Professional, MS Office	1 pc
2	Notebook 15", Intel Core i5, 1920 x 1080, 4GB RAM, HDD 500GB, 4x USB 3.0, DVD±RW, wireless laser mouse, OS Windows Professional, MS Office	1 pc
3	Desktop PC - Intel Core i7, 8GB RAM, HDD 1TB, AMD Radeon HD7870 2MB, USB 3.0, DVD±R/RW/DL, keyboard, laser mouse, OS Windows Professional, MS Office, LED IPS 24" 1920 x 1200 (WUXGA) pivot.	1 pc
4	Laser monochrome printer A3, multifunctional (printer / scanner / copier), 128MB, 600x600dpi, at least 20 pages/min.	1 pc
5	Ink colour printer A3+, multifunctional (printer / scanner / copier), at least 256MB, scanner 1200dpi, at least 15monochrome/8colour pages/min.	1 pc
6	Cabinet for drawings	As required
7	Automatic levelling instruments, staff 5 m long	As required
8	Spirit level 1 m long	As required
9	100m laminate tape measure (open rewind spool)	1 pc
10	30m steel tape measure (open rewind spool)	1 pc
11	Sectioned layout pole, 2 m long	As required
12	5 m pocket steel tape measure	2 pcs
13	Digital multimeter (ammeter+voltmeter+ohmmeter)	1 pcs
14	Both-handed strike hammer and bowed hammer	As required
15	Sheet-metal board wipeable	As required
16	Markers for writing on the board	As required
17	Line marker	As required

l 03/12/18 f

No.	Device name	Quantity
18	Book for recording measurements	As required
19	Dynamic panel 300 mm	As required
20	Hammer for measuring concrete hardness	As required
21	Contact thermometer for concrete	As required
22	Plastic device for measuring concrete consistency	As required
23	Water gauge	As required
24	Plumb bob	As required
25	Watertight lamp incl. batteries as required	As required
26	Thermometer (maximum/minimum)	As required
27	Hard hats	4 pcs
28	Pair of rubber boots	4 pcs
29	Safety vest	4 pcs

The Contractor shall provide an adequate number of workers to perform cleaning and basic maintenance of tools and to assist Engineer at measuring, controlling, testing or proving works executed by the Contractor.

After the handover, a report shall be elaborated with a detailed list of equipment, signed by the Contractor, Engineer and the Employer.

1.13.2. Computer equipment

The Engineer shall operate at his own expenses and be responsible for all computer, communication and office technology.

1.14. CONSTRUCTION SITE

1.14.1. Construction site characteristics

The Danilovgrad WWTP construction site is situated on the right bank of the Zeta river. This newly created fenced-off site shall require new temporary land occupation.

Underground as well as aboveground utility lines may be located within the WWTP premises. During the realisation of the WWTP structures, both existing and designed utility lines and structures shall be taken into consideration regarding their protection zones and work performed within these zones. The Contractor's works shall include potential re-laying of existing utility lines.

Re-laying of the existing aboveground power lines (EHV and HV) within the WWTP premises shall be provided by the Employer.

Besides the protection zones of utility lines, the construction area concerned may also contain other infrastructure protective zones (communications, water courses, etc.).

1.14.1.1. Capacity and use of newly designed temporary-work structures

The perimeter of the site includes construction areas serving as temporary-work areas, material storage sites, excavated soil temporary dumping sites, and access areas. Temporary-work structures, offices, and technological and construction material storage areas shall be situated within the construction yard occupying an integrated area.

Areas for temporary land occupation, utilised as temporary dumping sites of excavated soil and backfilling material, shall be determined during the site handover.

The temporary works shall further include structures serving as changing rooms, sanitary facilities, site engineer's and foremen's offices, storerooms, Engineer's office, and meeting room. Steel storage structures serving as storerooms of tools and materials shall be located separately within the site.

1.14.1.2. Providing access, water and power supply to temporary works

The construction site shall be accessible from communications.

Supply of potable water to be used for the preparation of concrete mix shall be provided before the construction commencement. The water connection point shall be specified upon discussion with the operator on contractual conditions regarding the connection.

Prior to the construction commencement it is necessary to apply for the establishment of a point for a temporary power connection.

1.14.1.3. Land occupation

Both permanent and temporary land occupation shall occur. Permanent occupation shall apply mainly to WWTP.

Temporary occupation shall apply mainly to:

- Material storage sites, temporary soil dumping sites, areas for the construction and for temporary works.

Individual storage sites shall be specified with the town and appropriate environmental department representatives prior to the construction work commencement.

1.14.2. Construction process

The Contractor shall propose a detailed and particular construction process schedule, with respect to the specified completion deadline.

The realisation of the Danilovgrad WWTP will be carried out independently of the sewerage construction. Only the connection of the constructed sewerage to the WWTP shall be taken into consideration. A sewer manhole located on the border of the design sewerage and the WWTP shall serve as a connecting structure. The existing sewerage outfall to the recipient shall be closed and the discharge to the WWTP shall be reconnected only after the WWTP

03/12/18

has been constructed. New sewage producers shall be connected to the sewerage system only after the discharge to the WWTP has been reconnected.

Seasonal effects and the volume of the Employer's financial means shall be taken into account within the time schedule.

1.14.3. Archaeological sites

Tenderers are obliged to take into account all risks resulting from the archaeological significance of the project area.

1.15. LIST OF REGULATIONS

1.15.1. General

During the Contract execution, the Contractor shall observe all laws, decrees, regulations, and technical standards valid in Montenegro.

If specific standards or regulations are referred to in the Contract, provisions of the latest valid issue or revision of relevant standards or regulations must be applied. If new regulations come into effect during the Contract execution, or if laws and standards are amended, permitting less strict criteria and contractual terms, the Contractor must meet the original specifications.

1.15.2. Indicative list of regulations

- Zakon o vodama, ("Sl. list RCG", br. 27/07 od 17.05.2007, 73/10 od 10.12.2010, 32/11 od 01.07.2011, 47/11 od 23.09.2011, 48/15, 52/16, 55/16 i 2/17) - *[Water Law]*
- Zakon o lokalnoj samoupravi ("Sl. list RCG", br. 42/03 od 16.07.2003, 28/04 od 29.04.2004, 75/05 od 12.12.2005, 13/06 od 03.03.2006, 88/09 od 31.12.2009, 03/10 od 19.01.2010, 73/10 od 10.12.2010, 38/12 od 19.07.2012, 10/14, 57/14 i 3/2016) – *[Law on Local Self-Government]*
- Zakon o komunalnim djelatnostima ("Službeni list CG" br.12/95, 74/16) – *[Law on Communal Activities]*
- Zakon o uređenju prostora i izgradnji objekata, "Sl. list Crne Gore", br. 51/08 od 22.08.2008, 40/10 od 22.07.2010, 34/11 od 12.07.2011, 40/11 od 08.08.2011, 47/11 od 23.09.2011, 35/13 od 23.07.2013, 39/13 od 07.08.2013, 33/14 od 25.jula 2014.god.) – *[Law on Spatial Planning and Construction of Structures]*
- Zakon o javnim nabavkama, ("Služber list CG", br. 46/06 od 21.07.2006. br. 42/11 od 15.08.2011, 57/14 i 28/15) – *[Law on Public Procurement]*
- Zakon o zaštiti prirode ("Sl. list Crne Gore", br. 51/08 od 22.08.2008, 21/09 od 20.03.2009, 40/11 od 08.08.2011, 6/14) – *[Environment Law]*
- Zakon o životnoj sredini ("Sl. list Crne Gore", br. 48/08 od 11.08.2008, 40/10 od 22.07.2010, 40/11 od 08.08.2011, 52/16) – *[Environment Law]*

03/12/19

- Zakon o procjeni uticaja na životnu sredinu, ("Sl. list RCG", br. 80/05 od 28.12.2005, "Sl. list Crne Gore", br. 40/10 od 22.07.2010, 73/10 od 10.12.2010, 40/11 od 08.08.2011, 27/13 od 11.06.2013, 52/16) – *[Law on Environmental Impact Assessment]*
- Uredba o klasifikaciji i kategorizaciji površinskih i podzemnih voda, ("Sl. list Crne Gore", br. 02/07 od 29.10.2007) – *[Decree on the classification and categorization of surface and underground waters]*
- Uredba o projektima za koje se vrši procjena uticaja na životnu sredinu ("Sl. list RCG", br. 20/07 od 04.04.2007, 47/13 i 53/14) – *[Decree on the projects for which the assessment is made of the impact on the environment]*
- Pravilnik o bližim uslovima koje treba da ispunjava komunalni kanalizacioni mulj, kolicine, obim, učestalost i metode analize komunalnog kanalizacionog mulja za dozvoljene namjene i uslovima koje treba da ispunjava zemljište planirano za njegovu primjenu ("Službeni list Crne Gore", br. 89/09 od 31. decembra 2009. godine) – *[Guidelines on further requirements to be satisfied for sludge in waste water sewage system, the quantity, volume, frequency and methods of analysis of the sludge in the municipal sewage system for approved purposes and on requirements for the soil planned for its use]*
- Pravilnik o kvalitetu i sanitarno-tehničkim uslovima za ispustanje otpadnih voda u recipijent i javnu kanalizaciju, nacinu i postupku ispitivanja kvaliteta opstadnih voda, minimalnom braju ispitivanja I sadržaju izvještaja o utvrđenom kvalitetu otpadnih voda. ("Sl. list Crne Gore", br. 45/08 od 31.07.2008, 09/10 od 19.02.2010, 26/12 od 24.05.2012, 52/12 od 12.10.2012, 59/13) – *[Guidelines on the quality and sanitary and technical conditions for discharge of waste water to reception tanks and public sewage system, on the method and procedure for the examination of waste water quality, on minimal number of reports on determining the quality of waste water]*
- Pravilnik o načinu izrade, razmjeri i bližoj sadržini tehničke dokumentacije ("Sl.list CG", br.23/14,32/15 i 75/15) itd.) – *[Guidelines on the method of creation, the scope and the closer content of the technical documentation]*
- Zakon o državnom premjeru i katastru nepokretnosti ("Sl.list CG", br. 29/07, 73/10, 32/11, 40/11, 43/15) – *[Law on State Survey and Real Estate Cadastre]*
- Zakon o PDVu (Zakon o porezu na dodatu vrijednosti Sl. list RCG" No. 65/01, 12/02, 38/02, 72/02, 21/03 and 76/05, 4/06, and "Sl. list CG", No. 16/07, 73/10, 40/11, 29/13, 9/15, 53/16 and 1/17) - [Law on VAT]
- Rulebook on the manner of development and control of technical documentation for the execution of geodetic works, acquiring authorization for planing and execution of geodetic works, ledger of works and inspection book, operating license and identity card for carrying out geodetic works.

The Contractor shall be informed about all eventually new amendments of above list of legislative regulation and possibly related laws.

03/12/18

2. STANDARD OF MATERIALS, WORKMANSHIP AND EQUIPMENT REQUIRED

2.1. GENERAL REQUIREMENTS – CIVIL PART

2.1.1. General requirements on civil and building works of the construction

2.1.1.1. Introduction

General requirements specified in this section form a part of the Contract for Work and requirements on the design documentation as well as structural design of the Work. The general requirements are completed with the Employer's requirements on civil and building, mechanical and electrical works. Should provisions be missing in the Employer's requirements, provisions given in the general requirements are applicable. Should a conflict between general requirements provisions and provision of the Employer's requirements occur, provisions given in the Employer's requirements are applicable.

2.1.1.2. Regulatory requirements

General requirements laid down by relevant legal regulations are applicable for the establishment and operation of construction sites and must be respected by participating parties.

Relevant legal regulations require a construction site to be secured against unauthorised access in places where hazards to human health or life may occur, to be marked including necessary information on the construction and participating parties, to be equipped with an entrance from a communication for delivery of construction products, disposal of soil and constructional refuse and for access of medical and fire vehicles.

Relevant legal regulations require access roads for material supply to be constructed and equipped, so that construction activities could be executed properly and safely. Further, the surrounding area shall not be excessively affected, especially by dust, noise, hazards to safety of traffic on communications, pollution of communications, air and waters, limited access to adjacent buildings and plots, to utility lines or fire-protection equipment.

Public areas and communications may be utilised for the construction site only within specified scope and time necessary.

2.1.1.3. Protection of historical monuments

The current legal protection of historical building monuments is ensured by relevant legal regulations.

Should a higher concentration of historically valuable structures or archaeological findings occur, they may be protected as a whole and their protection zone may be declared.

Within the performance of construction activities it is necessary to respect a competent authority's binding opinion, usually specified in the building permit. This authority may require that all archaeological items found are reported, or an archaeological survey is performed in

03/12/18

the form of an expert monitoring or soil exposure in the course of excavation works, followed by the preservation and documentation of archaeological layouts and findings along the construction in locations concerned. The survey may be performed only by authorities and organisations authorised to do so. Further conditions and requirements of the relevant authority which the Contractor must respect and meet, shall be specified in the authority's opinion in the building permit.

The Contractor is assumed to have studied the requirements specified in the building permit and have included in the tender dossier a sum for covering costs of the archaeological survey within the construction site as required by the building permit.

2.1.1.4. Requirements on standards, construction materials and products

The Contractor's design documentation, including eventual changes, shall be elaborated within the meaning of the latest standards valid in Montenegro, either EN or ISO. The standard determining stricter requirements shall be considered binding.

All construction products and works shall comply with specifications of the latest technical standards issued in Montenegro, European standards (EN) or ISO standards. The standard determining stricter requirements shall be considered binding.

Requirements on construction products shall comply with Directive 89/106/EEC, on construction products. Only suitable construction products complying with relevant legal regulations may be used. The process of compliance verification is specified in relevant legal regulations.

Prior to incorporating materials and equipment into the Work, the Contractor is obliged to submit certificates for all materials and equipment to Engineer to be approved in compliance with the contract. The certificates shall be issued by an accredited testing institute and valid until the date of the project completion.

2.1.1.5. Establishing the site in historical reserves

The current legal protection of historical building monuments is ensured by relevant legal regulations.

Should a higher concentration of historically valuable structures or archaeological findings occur, they may be protected as a whole and their protection zone may be declared.

Within the performance of construction activities it is necessary to respect a competent authority's binding opinion, usually specified in the building permit. This authority may require, in reasoned cases, that an archaeological survey is performed in the form of an expert monitoring or soil exposure in the course of excavation works, followed by the preservation and documentation of archaeological layouts and findings along the construction in locations concerned. The archaeological survey may be performed only by authorities and organisations authorised to do so.

ℓ 03/12/18

2.1.2. Protection of the environment

2.1.2.1. General

General requirements on the protection of the environment are specified in relevant legal regulations.

In the course of performing construction activities, all regulations regarding the protection of the environment shall be respected in the maximum extent.

The tenderers are obliged to get acquainted with all requirements and limitations resulting from opinions of relevant state environmental authorities and include them in the tender price.

The Contractor shall take all measures necessary for meeting all specified regulations and rules regarding the protection of the environment. No contamination shall be accepted within the construction site or work space. All necessary safety measures for the prevention of such contamination shall be taken and their observation shall be required with no exceptions.

The Contractor shall use technological constructional procedures ensuring a necessary guarantee of the prevention of environmental impact of excessive noise, dust, vibrations, etc. on workers, local inhabitants and so on. Preventive measures shall be taken also along transport routes.

When purchasing materials, the Contractor shall take into account not only their price and quality, but also their effects on the environment during their production process.

The Contractor is obliged to reduce harmful effects of constructional activities and their impact on the environment during the construction. These include especially noise, pollution of air, water and communications, and vegetation protection.

No hazardous substances may be supplied to or used for any purpose within the construction site, unless the Contractor has received a written approval from the construction Engineer in advance and disposes of necessary authorisation. The position of every storeroom of hazardous substances within the construction site must be approved of in writing by Engineer.

When handling hazardous substances, the Contractor shall take all measures in compliance with valid legal regulations, and shall meet all obligations resulting from valid legal regulations.

2.1.2.2. Water protection

Construction activities may not cause any contamination of ground waters (surface and ground waters affected by construction materials or activities). During the construction, contamination of soil by oil products and other polluting substances must be prevented.

Generally, legal regulations regarding waters shall be observed.

Unless it is contrary to valid legislation, constructed facilities located within the inundation zone must be situated in such a way as to be protected against a hundred-year flood. This applies especially to openings of sewer and water shafts, valve chambers, pumping stations, and other facilities which, if flooded, may cause water contamination.

03/12/18

Regarding the water protection, it is exceptionally important to plan a backup power supply for all pumping stations which have no storage capacity dimensioned within the meaning of valid regulations.

2.1.2.3. Air protection

Air protection is ensured by relevant legal regulations.

The design documentation (DD) must be approved of by an environmental protection authority. The Contractor is obliged to meet all conditions specified in the opinion mentioned. Should any changed by made in the DD, especially those regarding contamination sources, the changed DD must be approved again by the relevant authority.

Unless it is contrary to valid legislation, the application for construction approval must include verification that the best available technical equipment has been selected, justification of the most suitable solution in terms of air protection, an authorised person's expertise focusing on the determination of source classification (new - existing), a list of necessary technical measures ensuring the reduction of emissions – odour substances, surrounding environment impact.

2.1.2.4. Waste disposal

All waste must be disposed of in compliance with provisions of legal regulations.

The waste register shall be kept in compliance with relevant legal regulations. The Contractor shall be responsible for the waste classification and collection. Individual types of waste shall be collected separately in appropriate places or collecting equipment, and removed and disposed of by authorised personnel.

The Contractor is obliged to recycle all usable waste (e.g. crushed asphalt and concrete from roads and other structures); only other excessive material (waste) shall be placed outside the construction site in official landfills, in compliance with valid legislation.

The Contractor shall select a landfill at his consideration. The bid for the collection and storage of soil/debris within individual structures shall be fixed and may not be changed depending on the distance of the landfill from the construction site.

Unless it is contrary to valid legislation, if the total quantity of construction waste and demolition waste exceeds 200 tons per year, its holder is obliged to separate it according to the types and provide its reuse. If more than 100 kg of hazardous waste per year is generated during the construction realisation, its holder is obliged to ensure a permission from a relevant state authority regarding waste management. If more than 100 tons of other waste per year or 500 kg of hazardous waste is generated by the construction operation, its holder is obliged to submit to the relevant state authority his waste management program for approval.

Before the certificate of completion is issued, documents containing quantities of generated waste and a legal method of its reuse/disposal must be submitted to the relevant state authority.

l 03/12/18

Landfilling fees are specified in relevant legal regulations.

The tenderer shall arrange controlled landfills for storing excessive soil, debris and other waste.

Should the sludge or bottom sediments be handled, the Contractor shall observe relevant legal regulations specifying details of the project content and details of the confirmation procedure for dosing and application of sludge and bottom sediments in agricultural or forest land.

2.1.2.5. Protection against noise, vibrations and emissions

Due to the environmental protection, the Contractor shall:

- Prevent the generation of excessive dustiness during demolition works, e.g. by watering dusty places within the space fit for demolition, or creating a water curtain.
- Ensure cleaning of vehicle tyres, or chassis of other construction machinery before their exiting the construction site, and sprinkling and cleaning public communications within the site exit. Engineer is authorised to make a decision on the technology used.
- Use suitable vehicles for the transport of loose materials. Cover loose material storages with sheets/foils.
- Observe hygienic rules regarding the protection of health against adverse effects of noise and vibrations during the construction realisation. Ensure such equipment for the realisation that shall not exceed the noise level of during its operation close to residential parts of individual municipalities.
- Use machinery in good conditions for the construction, equipped with specified noise reducing covers.
- Perform regular technical inspections and maintenance of machinery and devices.
- Ensure continual operation of machinery, a sufficient number of transport vehicles. Turn off machinery engines during necessary breaks.
- Prevent operation of transport vehicles and machinery producing excessive amounts of harmful emissions in exhaust fumes.
- Maximally reduce dustiness during construction and other works and transport.
- Secure transported materials to protect transport routes against contamination (sheets, watering, sped limitation, etc.).
- Construct paved (dustless) and drained access roads.
- Restrict operation and parking of vehicles outside paved surfaces.
- Ensure cleaning of tyres (chassis) of transport vehicles and machinery entering public communications.
- Remove immediately unavoidable contamination of communications.
- Maintain tidiness on the construction site.

03/12/18

- Store construction materials as required in designated places.
- Draining rainwater from the construction site.
- Prevent water contamination (with oil products, mud, car cleaning agents, etc.).
- Use areas adjoining the site for the construction.
- Maximally protect vegetation in the vicinity of the construction site.

2.1.2.6. Clearing grown vegetation and replacement planting

In spite of the designer's effort to minimise clearing grown vegetation, for the construction realisation it will be necessary to clear some vegetation in the place of several structural units. Unless it is contrary to valid legislation, the working belt width shall be minimised through vegetation to 5.5-6.5 m. Along the working belt edges, trees with trunk circumference over 100 cm shall be protected against damage up to 130 m above the ground. Special attention shall be paid to dispersed protected trees and other significant vegetation within municipalities concerned (especially around churches, graveyards and similar places).

Sufficiently in advance of the construction work commencement, vegetation passportisation and inventory within the site shall be completed. If trees growing separately from a forest are necessary to be cut down, permission from relevant municipalities or other owners/caretakers must be obtained. Existing vegetation shall be cleared in compliance with valid Montenegro legislation. Vegetation clearing shall be performed out of the growing season.

Cleared vegetation shall be replaced with new planting of original types.

2.1.2.7. Environmental protection plan

The Contractor must elaborate and submit to Engineer for approval an environmental protection plan during the construction in compliance with valid legal regulations of Montenegro and the above-listed requirements. This plan must include the following issues and contain proposals for the elimination or reduction of contamination sources and procedures in emergency situations:

- Hygienic facilities for construction personnel on the construction site;
- Disposal of excessive material from excavations;
- Contamination of soil, ground and surface waters with oil, contaminated service water, construction materials and chemicals;
- Contamination of air with exhaust fumes from construction machinery due to construction works;
- Surface water discharge from the site drainage systems to surface waters;
- Noise and vibrations on the site and its surrounding;
- Keeping the site tidy.

l 03/12/18

2.1.3. Work safety requirements

2.1.3.1. Work safety on the site

All works must be executed strictly in compliance with valid Montenegro legislation.

The work safety on the site shall be governed by relevant legal regulations determining requirements on the provision of safety of work and technical equipment in the course of constructional, assembly, and maintenance activities, production of construction materials, their storage and handling, and work related to the construction activity.

The work safety on the site shall also be governed by relevant legal regulations determining requirements on the provision of occupational safety and health protection and technical equipment safety.

The relevant legal regulations further specify responsibilities related to handing-over the site and preparation of structures, and to performing work under exceptional circumstances. The legal regulations further specify the Contractor's responsibility to train employees in compliance with safety regulations, and ensure testing their knowledge, unless specified otherwise. Records on the training must be kept.

Construction works requiring special qualification may be executed only by workers with such qualification. The Contractor must not assign persons to perform construction work if they do not meet requirements related to health conditions and qualification as specified in relevant regulations.

Safety requirements on particular construction activities are specified in relevant legal regulations.

Special attention shall be paid to assembly works, works in hazardous environments and spaces, works at height, on roofs and scaffoldings, demolition works, which are especially dangerous in terms of occupational safety.

Requirements on fire safety are specified in relevant legal regulations, determining technical requirements on fire safety during the construction and usage of structures.

Relevant legal regulation must be observed when working with machinery and vibration devices, handling loads, and working in explosive environments.

Requirements on the provision of fire-fighting water for the site are specified in relevant legal regulations.

Further, legal regulations determining the conditions for providing personal protective equipment must be observed. The Contractor is obliged to provide his employees with adequate protective equipment according to the work executed. Unless it is contrary to valid legislation, the minimum requirements include protective helmets (easy-to-see for work executed on roads, e.g. of yellow colour or with a reflective band), protective jackets (of yellow/orange colour or with a reflective band for work executed on roads), protective gloves, goggles, ear protectors, working footwear with metal front part, etc.

03/12/18

The minimum safety and health requirements for using working devices are specified in relevant legal regulations.

2.1.3.2. Machines and machinery equipments

Only machines and machinery equipment complying with their design, construction and technical conditions to all work safety regulations may be used. Machinery may be used only for purposes for which it was manufactured and intended.

The use of machines and machinery equipment must comply with instructions for use and maintenance which must always be, together with the operation log, kept in a specified place.

Unless it is contrary to valid legislation, machines and equipment may be operated only by qualified persons of 18 years and older. Machine and equipment operators must be retrained and tested at least once every two years in relation to work safety regulations. Each machine shall be operated only by 1 person, unless specified otherwise.

Machines may be put into operation only by properly rained and tested personnel. Prior to putting them into operation, each machine or equipment must be checked whether it is in good conditions, provided with relevant operational documents, evidence number, and other particulars specified in relevant regulations.

Operators are obliged to inform their supervisors on every defect or deviation of their machine from common operational conditions and record such defects or deviations to the log. Alternating operator must also be informed.

After the Work termination, machines shall be put to safe positions and secured suitably against spontaneous movement. Working tools may be replaced and machines repaired only after turning them off and securing against movement. Machines may be transported, loaded, and unloaded according to directions given in the instruction for use.

2.1.3.3. Construction site organisation

Construction site organisation in terms of work safety and health protection shall be governed by relevant legal regulations.

Unless it is contrary to valid legislation, the site shall be properly fenced off after its limits have been determined. The minimum fence height shall be 1.8 m in built-up areas. Cut and fill structures and structures in which temporary works are executed shall be enclosed with double-bar fencing 1.1 m high or in other way approved by Engineer. The fencing face reaching to public communications must be fitted with a red warning light during limited visibility conditions and at night; red light shall be installed every 50 m along the fence. Sites located outside built-up areas must be fenced-off or enclosed only if they are situated less than 30 m from public communications. Fencing-off is not necessary, if another suitable method has been arranged with owners or users of the plots concerned.

Works on communications may be executed only upon an approved traffic organisation project and with traffic marking provided.

03/12/18

If the building plot reaches into a protection zone, conditions and requirements determined by specific regulations for the protection zone in question must be observed. If the building plot reaches into overlaying protection zones, the construction must meet conditions of all such zones.

Vegetation located outside built-up areas of the building plot must be saved and protected against damage, with the exception of cases specified in particular regulations.

The location of the Contractor's offices, temporary works, workshops and storerooms shall be approved by Engineer. The Contractor shall provide fencing of his own areas including a lockable gate, and security guarding at his own expenses.

The Contractor is further obliged to insure properly all temporary works and materials stored within the site and submit the insurance contract to Engineer before the work commencement.

2.1.3.4. Fire safety of structures

One of the qualitative aspects of structures is their ability to resist increased temperature and effects of fire. Fire-resistance of the Work is determined by the properties of materials used. The use of products within the construction is defined by relevant legal regulations on construction products. A construction product is suitable for using in terms of fire safety if it enables to maintain bearing capacity and stability for the time determined by technical specifications, to prevent fire and smoke from spreading inside the structure and to its other parts and adjacent structures, to allow people and animals to escape from the structure or to be saved in another way.

The fire-safety of a structure shall be governed, apart from the above-given generally binding regulations, by relevant legal regulations specifying technical requirements on fire safety during construction and usage of structures.

2.1.3.5. Traffic organisation

In places where, due to work executed, it is necessary to close temporarily a section of an existing communication or pavement, or limit the traffic, the Contractor shall provide and maintain a diversion of the section in question.

The above-given work shall be executed in compliance with valid regulations. Traffic signs (type, design) shall comply with relevant legal regulations.

The Contractor shall provide and maintain the traffic signs at his own expenses.

The Contractor further bears responsibility for maintaining all hard surfaces clean. No excessive or other materials may be stored on communications. Unless it is contrary to valid legislation, all entrances to the building and vehicle entries to the plot shall be bridged over with metal plates with the min. thickness of 25 mm and sufficient bearing capacity during excavation works. At least one pavement shall be kept free at all times.

03/12/18

2.1.4. Handing-over/acceptance of the construction site

The Employer shall hand over the construction site to the Contractor in compliance with contract terms and with approved work schedule. In the course of the cite handing-over, the Employer shall submit existing geodetic elaborates of individual structures which the Contractor may, but does not need to utilise. Utility lines and other obstacles, construction perimeter (or working strip for cut-and-fill structures) shall be marked out by the Contractor upon the documentation elaborated by him.

Handing-over of parts of the site, owned by Employer, shall be recorded in the form of a notion signed by the Employer, Contractor and Engineer. Parts of the construction site which are owned by third parties shall be handed over by such a party to the Contractor in the presence of Engineer.

The Contractor is fully responsible for all activities related to the provision of conditions for entering the plots. The Contractor shall visit all owners of the plots on which the works are to be performed in order to discuss the construction realisation, to approve the schedule, access and entry, manipulation belts, temporary and permanent fencing, restoring, and to prepare a summary on the conditions of individual plots. Agreements with owners prepared by the Contractor shall be submitted to Engineer when requested. Should structures stay permanently on these plots after the construction termination (e.g. shafts), the Contractor is obliged to conclude lease contracts with the plot owners in compliance with valid regulations.

Topsoil of agricultural land shall be removed within the width of the working belt and placed along the belt. This soil shall be reused, re-cultivated (stones removed) and seeded with grass.

The working belt width and entry conditions on private plots shall be negotiated by the Contractor with owners/users of such plots.

2.1.4.1. Layout works

The Contractor is fully responsible for layout works.

Unless specified otherwise, all elevation figures shall be given in metres in the valid system written with three decimal positions. data for all elevation figures shall be based on the basic (referential) bench marks submitted by the Employer or determined by the Contractor in the presence of Engineer, in the valid system.

If requested, the Contractor shall submit, prior to the work commencement, a geodetic elaborate in both printed and electronic forms. Accuracy of these bench marks of this geodetic elaborate is the responsibility of the Employer; Engineer may, but does not need to check them, but the Contractor is obliged to verify their accuracy before processing and using them. This proceedings shall be recorded in the form of a notion signed by both geodesists. During the construction realisation, the Contractor shall determine necessary derived bench marks and shall regularly check them.

The Contractor shall determine suitable places within the site for temporary laying-out points and measuring posts, and in the course of the works shall regularly check the levels of the

l 03/12/18 f

marking out points and coordinates in the posts, compared to the basic referential points received from the Employer.

The Contractor is obliged to lay out all parts of the Work by their connection to existing parts of the Work. Building structures shall be laid out using steel stakes anchored in concrete, or by another method approved by Engineer.

Unless it is contrary to valid legislation, the Contractor shall establish referential coordinate points during the construction, in distances not bigger than 500 m along all piping. These points shall be marked visibly and placed in approved spots, either in existing structures or in the form of steel stakes anchored in concrete.

For performing the survey works in compliance with the contract requirements, the Contractor shall employ only physical or legal persons authorised to perform geodetic and cartographic activities according to legal regulations who shall be approved by Engineer prior to the geodetic work commencement.

Measuring apparatuses used by the Contractor shall be up-to-date and suitable for the work to be executed, and maintained in acceptable technical conditions. Apparatuses and equipment shall be approved by Engineer prior to the geodetic work commencement.

The Contractor shall submit valid calibration/manufacture certificates issued by authorised bodies for all apparatuses used in the construction. Further calibration shall be performed as required by valid legislation.

All field logs, calculations, maps, etc., of the above-listed laying-out activities shall be submitted to Engineer for approval immediately after the laying-out work termination.

The Contractor shall record and keep all bench marks (both basic and derived) in digital photographs which shall submit to the Employer on a CD-ROM after the contract termination.

Positions and dimensions (or depths) of utility lines marked in the tender documents submitted by the Employer must be regarded as informative. The Contractor must be aware of the fact that not all underground lines are marked in the tender documents (due to insufficient source materials). Thus the Contractor is obliged to make test pits and determine the position of all utility lines prior to the excavation work commencement. Prior to the work commencement, the Contractor is obliged to contact owners/operators of all utility lines found and request accurate laying-out of their positions. The depth may be determined only after the excavation works commencement. During the work performance, the Contractor is obliged to observe all requirements of the utility lines owners/operators during the work.

2.1.5. Demolition works

2.1.5.1. General

Demolition of any existing building or structure shall not be performed before it is approved by Engineer in writing.

In the case of complete demolition, it shall be performed including foundations, unless specified otherwise in the Employer's requirements or ordered by Engineer. Demolition works must comply with relevant legislation.

03/12/18

Prior to the demolition works execution, machines and machinery equipment must be disassembled. Disassembly works generally include disassembling machines and equipment including piping, wiring, manifolds; discharging old service liquids, and interplant transport according to the Employer's requirements.

The Contractor shall ensure ecological disposal of all disassembled machines and equipment. Disassembly of any equipment shall not be performed before it is approved by Engineer in writing. Should the Employer not agree with the disposal of any machine or machinery equipment, this shall stay the Employer' property and the Contractor is obliged to store such disassembled machine in a determined place. The Contractor is responsible for the disposal of all old discharged service liquids. The disposal costs shall be included in the tender price.

2.1.5.2. Permission for demolition works

Prior to the demolition or reconstruction work commencement, the conditions of the structure to be demolished must be surveyed, as well as of adjacent structures and utility lines, and the survey's result recorded in the construction log. Upon this survey the Contractor shall draw up a detailed schedule (technological procedure) of demolition works which shall be approved by Engineer. Changes in the technology must also be approved by Engineer.

The permission for demolishing existing buildings and structures must be applied for in writing from Engineer; the application shall include the demolition work schedule. No demolition work may be executed before the Engineer's permission is obtained, and before temporary construction or other activities are carried out, necessary to ensure the operation and/or bypass of existing equipment, or safety during the demolition works.

2.1.5.3. Protection of existing structures

The method of ensuring safety in the course of demolition and construction works shall comply with relevant legal regulations.

Prior to the demolition works commencement, the endangered area shall be marked out according to the work technology elaborated, secured against unauthorised access. Underground cavities shall be filled or secured otherwise. Utility lines (sewers, water mains, gas, electricity) must be disconnected and secured against any possible usage during the demolition work performance. If they cannot be disconnected due to operational reasons, rules for they operation during the demolition work performance must be determined.

Unless it is contrary to valid legislation, the endangered area where the work is to be executed must also be secured with full fencing min. 1.8 m high. If the area cannot be fenced off due to any reason, it must be secured by guarding or another way approved by Engineer.

The Contractor shall not demolish or remove any existing buildings, structures or other objects, including trees, regardless whether they are marked in the construction design or not, excluding those for which the Contractor has obtained specific instructions from Engineer. The Contractor shall make maximum effort to protect these structures against damage, including houses, buildings, fences, or trees, situated within or close to the construction site.

l 03/12/18

The Contractor is obliged to carry out all necessary temporary works to secure all underground utility lines in their original condition. Their condition after the work termination must not be worse compared to the condition in which they were before the work commended.

In the case of temporary shutdown and bypass of part of sewer systems, the Contractor shall provide all pumping and other technical equipment necessary for ensuring continual operation of the sewers, and make all measures to prevent flooding of houses and surrounding areas. For bypassing existing technological devices within a water or sewer structure, or a WWTP, the Contractor must obtain also the Employer's permission for the demolition work commencement.

Any property situated in the close proximity to the Work shall be protected against damage which could be caused by vehicles, ground sinking, vibrations, pressure wave, etc. Any damage caused shall be removed by the Contractor at his expenses and the condition of the property in question shall be restored to its original condition.

Should the work be executed close to, though, under or above existing structures, piping, cable lines, etc., the Contractor is obliged to provide their temporary support or wrapping preventing their sinking or damaging, prevent leakage of liquids or gases from piping, explosions and other hazards.

Should any leakage of liquids, damage or other hazards occur, the Contractor shall immediately inform Engineer and the Employer, and shall elaborate a report including photographic documentation and necessary information about the accident.

Damaged structures, piping, cables, etc. must be immediately restored to their original condition according to the Engineer's and relevant operator/owner's instructions, at the Contractor's expenses.

2.1.5.4. Backfilling and terrain works

All empty holes/pits shall be filled with soil compacted to the same compaction degree as the surrounding soil/terrain and the terrain shall be finished according to the Engineer requirements.

2.1.5.5. Filling and sealing of unused piping

In places where existing water mains or sewers are to be connected to the newly-constructed system, the water mains or sewer sections below the connection shall not be further operated.

Unless it is contrary to valid legislation, sections of unused sewer piping shall be sealed with concrete plugs min. 1 m long at each end and between shafts. Shafts situated within the unused sections shall be demolished to the depth of 500 mm below the formation level, empty spaces filled with approved filling materials and the terrain redone according to the surrounding area.

03/12/18

2.1.6. Earth works

Earth works shall be designed and executed as specified in relevant legal regulations. When designing earth works, the Contractor is obliged to locate all utility lines and other obstacles (underground spaces, old works, etc.) in terms of their direction and depth. The construction design must include marked utility lines and other obstacles below the ground, on and above the surface. Accurate lay-out must be verified and confirmed by the lines operators prior to the earth work commencement.

The decisive factor during earth works are geological conditions of the location concerned in the course of the works. Prior to the earth work commencement it is necessary to study all existing documents submitted by the Employer, related to engineering-geological and hydro-geological surveys. The earth work method shall comply with the geological profile described and with data on the ground water level and character.

Prior to the earth work commencement, the Contractor must determine the position of all underground lines within the site and its immediate surroundings, and ask their operators to lay them out. No earth works may start before all underground lines have been laid-out.

All earth works shall be executed with respect to the local conditions and in compliance with relevant legal regulations. All conditions of the legal regulations must be met.

2.1.6.1. Advance workings

The construction site contains a large number of obstacles which must be taken into account for the work performance. They include (indicative list): crossing with ditches situated on both sides of main roads; crossing with roads, railway and other obstacles; underground lines (HV and LV lines, telecommunication cables, existing sewers and water mains, house connections, heating piping, gas piping, street lighting cables, military cables, and other utility lines); aboveground lines (e.g. HV and LV cables), bushes and trees.

During the advance workings as well as the Work realisation, the Contractor shall cooperate and coordinate his activities with relevant authorities and operators of existing lines.

The Contractor shall get acquainted with all aboveground and underground lines which may affect the Work realisation in any way. The Contractor shall be responsible for laying-out all existing lines and for reporting eventual damages caused by construction activities to the lines which are to be operated during the work performance and after the work termination. Prior to the work commencement, the Contractor is obliged to apply in writing to relevant operators for laying-out utility lines and piping. The vertical position of these lines shall be determined through carefully performed manual excavations. The Contractor shall bear all costs related to laying-out thee utility lines. No earth works may start before all underground lines have been laid-out and without the Engineer's approval!!!

Should it be considered necessary (in sections where laying-out individual lines could be affected by adjoining underground lines), transverse verification boreholes shall be made and accurate position of the underground lines determined.

Since the position of utility lines marked in drawings may differ from their real position, field research is required to be performed prior to the work commencement in order to determine

03/12/18

the position of utility lines. Upon data found, re-laying of lines may be carried out in the course of earth works, if this is necessary.

In sections containing vegetation this shall be cleared as specified in valid regulations.

In agriculturally utilised areas and green belts, the cultural bed shall be scraped to the physiologically effective depth, deposited (according to the Documentation of site organisation) and used for backfilling after the temporary land occupation termination.

Advance workings, except the above-described activities, include also the elaboration of digital photographic documentation of structures and buildings located in the close proximity of trenches. The number of photographs and required details shall be agreed upon with Engineer before the documentation work commencement, and the photographs shall be taken at the Engineer's presence. Such photographic documentation shall be elaborated for each construction and shall be saved on a separate CD-ROM; copies of all such CD-ROMs shall be submitted to Engineer. Printed version of the documentation shall be made only if requested by the Employer.

All works shall be carried out during operation. Prior to the work commencement, both the Employer and Contractor shall obtain complete information on the operation in risk sections of sewers, pumping stations, and water reservoirs.

2.1.6.2. Site excavation

Rock material grading

Rock material shall be graded according to the difficulty of its breaking and removing as specified in valid regulations.

Earth works marking-out

Prior to the earth works commencement, the spatial position of building structures shall be marked out and secured with anchorage marks.

Unless it is contrary to valid legislation, marking-out of corner points during excavation shall be secured with benches places 1-2 m from the trench outline. A square grid shall be used for detailed marking-out of excavations and landscaping. Slope of cut-and-fill structures shall be marked with points placed from each other according to the visibility given by the terrain configuration, with max. distance of 20 m. Outline of surface structures shall be marked with outline benches. The level line of future mounds shall be marked with lattice crosses anchored by axis stakes.

Excavation of trenches and pits

Unless it is contrary to valid legislation, trenches and pits shall be excavated manually or mechanically; excavations close to utility lines must be carried out manually. Excavations may be carried out mechanically for suitable soil types provided that the soil concerned is suitable for pipe laying, maximally to 10 cm above the bottom edge of the structure or bottom of the pipe. Loosening soil on the excavation bottom is not allowed. A layer of the 0-63 fraction gravel or sand gravel shall be laid on the trench bottom to protect it against mudding. The stabilisation layer shall be compacted, its maximum thickness after compacting may be

03/12/18

20 cm. Then a bed for piping shall be made. Each foundation bottom must be approved by Engineer. If foundation pits contain sand or gravel, excavation works must be adjusted to the character of these incoherent materials and, unless specified otherwise by Engineer, trenches shall be excavated in 10cm layers to prevent sinking of the surface and forming caverns. In such cases the Contractor is obliged to obtain the Engineer's permission for the work procedure.

No additional work and costs shall be accepted resulting from the Contractor's wrong selection of a technological procedure of trench excavation.

If any finding is discovered which may not be excluded as historical, archaeological or important in any other way in terms of the public interest, relevant regulations shall be observed.

Soil excavated from trenches and pits shall be deposited in temporary places specified in the Documentation of site organisation.

Handling topsoil

When performing construction works of any kind, the cultural bed shall be scraped. The topsoil shall be removed within the trench width as specified in the Main design and deposited appropriately to be used for backfilling and re-cultivated.

Topsoil which will become unsuitable due to the Contractor's activities shall be replaced with suitable topsoil at the Contractor's expenses.

Filling of trenches and pits

Trenches and pits shall be backfilled with excavated soil in compliance with relevant regulations.

Unless it is contrary to valid legislation, trenches under communications shall be backfilled with aggregate or grouted gravel sand from the excavation, and non-compactable excavated soil shall be deposited in permanent a dumping site. Trenches and pits located within the green belt shall be backfilled with excavated soil with horizontal transfer to a temporary dumping site.

Soil unsuitable for backfilling shall be replaced by the Contractor with a suitable backfilling material at his own expenses. The risk of necessary replacement of unsuitable backfilling materials under communications with suitable ones shall be included in the tender price.

2.1.6.3. Draining excavations

Excavations must be kept dry, without a permanent water level regardless of the water source, so that buildings may be founded or piping laid in dry conditions. The method of draining trenches and pits shall be approved by Engineer. If groundwater must be pumped during earth works, the Contractor shall obtain permission for such handling from a relevant state authority and public interest organisations.

Unless it is contrary to valid legislation, the following may be generally stated:

l 03/12/18

- Trenches shall be drained with drain pipes laid in collecting grooves or deepened parts of trenches. The number of grooves, size and number of pipes depend on affluent to the trench, longitudinal slope, etc. Drain pipes shall be backfilled with gravel, gravel sand of the same particle size. Sand or grouted sand may not be used for backfilling.
- The minimum lateral slope of the trench bottom towards the collecting groove or drain pipe laid in the deepened part of the trench is 3 % .The trench bottom shall be backfilled with gravel sand 15 cm thick which will remove collected water towards the groove or drain pipe. If the bottom part of the trench is excavated in rock, drain pipes may be replaced with hand placed rockfill.
- Pumping sets must be located in pumping shafts the number of which must be determined according to the quantity and quality of groundwater and surrounding soil. For permanent affluent, pumping must be provided 24 hours a day. If a trench is to be drained, and not every action is specified in detail, the tenderer is considered to have included setting the pump, water pumping, pumping system availability, as well as pumped water disposal in the price, i.e. all activities necessary for providing a dry base for the pipe bed.
- The design of lowering the groundwater level in fine sands, especially in built-up areas, shall prevent washing or sucking-off of fine particles from the surrounding soil or from backfilling material.
- For deep-seated groundwater level lowering the Contractor shall elaborate in advance a project of groundwater level lowering. This project shall be submitted to Engineer for approval. The Contractor shall execute at his own expenses test boreholes, or pumping tests, in a number sufficient for quality elaboration of the project.
- If the bed is at risk to be washed out with flowing water, it must be protected with clay or concrete dikes or with drainage. The dikes shall be made perpendicularly to the piping. They shall be 60 cm wide at the foot and 20 cm at the crest, and 30 cm high above the piping top. The dike location shall ensure that the crest of the lower placed dike was at least 5 cm above the top of the piping at the next higher-located dike. The lower part of the dike must be made before the bed is laid, below the bed level. The upper part shall be made after the piping is laid. Clay material shall be laid in 15cm thick, compacted layers. When using concrete dikes, pipe dilatation must be ensured.
- The Contractor shall be fully responsible for setting and operating temporary pumps for draining excavation pits during the construction.
- The Contractor shall be responsible for the lease or purchase of pumps and pipes, payment for power consumption, and other related expenses. The Contractor is obliged to supervise the pump operation. If a breakdown due to flooding occurs, the Contractor must remove the breakdown within 30 minutes. The capacity of pumps shall correspond with the expected maximum flows occurring during the construction.
- When two parallel piping lines are to be constructed, joint draining of both trenches in the deeper trench and joint pumping of water is expected.

03/12/18

- If longitudinal drainage is laid on the trench bottom, the Contractor must blind it after the construction completion and restore the underbed layers to their original condition. No longitudinal or transverse draining element may remain underground after the construction completion, which could affect the groundwater flows in the area concerned.
- In places where the sewerage/water mains will run below the groundwater level, a sealing barrier shall be installed in the trench each 150 m. Existing soil shall be replaced with pervious incoherent soils (backfilling) which may serve as drainage and affect the groundwater flows in the area concerned. The sealing barriers shall be installed below the foundation bottoms along the trench width and 1m length, their height shall be 1 m above the standing groundwater level. Outside communications the se sealing elements shall be made of clay soil, within communications of poor concrete.
- If existing drain pipes are cut through during the trench excavation (which may be expected especially in rural areas), the Contractor is obliged to restore the drainage to its original condition after backfilling.

2.1.6.4. Securing excavations

Trenches for sewer systems reach to 4-5 m, exceptionally even deeper. Due to this, excavation walls must be secured with sheeting in compliance with relevant regulations. The Contractor shall provide excavation sheeting in all places where it is necessary regarding work safety and stability of walls and surrounding area and where it is specified in the Main design or determined by Engineer.

Unless it is contrary to valid legislation, the following may be generally stated:

- Vertical walls of manually excavated trenches must be secured against collapsing with depth bigger than 1.3 m in built-up areas and 1.5 m outside built-up areas. With a view to the soil conditions (shall be assessed by Engineer) this depth may be lowered to 70 cm. If workers are expected to enter these trenches, their minimum clear width must be 80 cm.
- Excavations shall be secured with the following sheeting types:
  - Horizontal sheeting – for dry, little compactable coherent soils
  - Poling sheeting – where a higher ground pressure is expected, for the excavation wall stability the sheeting planks must be driven together in the course of excavation (partially coherent soils)
  - Overall sheeting systems – for incoherent soils
  - Steel sheet piles – in strongly compactable soils and incoherent soils below the groundwater level.
- Portable overall sheeting systems are suitable for mechanically excavated trenches.

l 03/12/18

- Trenches in incoherent soils or at high groundwater level must be secured also with little depth. For bigger depths and adverse geological conditions sheet piles shall be used; their utilisation may be ordered by Engineer in exceptional cases (work safety).
- Sheeting must be designed to ensure safety of persons working below the excavation walls, to prevent sinking of the surrounding ground, and to ensure stability of finished or constructed structures in the vicinity.
- The Contractor shall adjust technological procedures of using mechanisms and sheeting, and of the excavation works to local conditions. If required, the Contractor shall take necessary measures to secure statically structures in the surroundings. The Contractor is responsible for all damages caused by insufficient static securing.
- The Contractor is responsible for selecting a particular sheeting type. However, the sheeting must in any case correspond to the work performing method, trench depth, soil type, distance of neighbouring structures, groundwater and utility lines occurrence in the trench, safety regulations and technological rules. The sheeting proposed for various types of work must be included in the quality control plan.
- If the soil stability changes in the course of the work, the sheeting type and scope must be adjusted to the actual conditions. In bigger depths (over 2 m) the Contractor is obliged to make static calculations which must be approved by Engineer before the given sheeting type is used.
- When compiling their bids, tenderers are obliged to get acquainted in detail with geological conditions, technical design of water mains and other structures, and other circumstances and hazards which may affect the sheeting type selection. The Employer shall not define the sheeting type and it is up to the Contractor what type he will propose and use in his bid in compliance with valid legislation. Despite this, the Employer shall not accept any additional requirements and additional costs if more expensive sheeting systems must be used, due to gravel or increased groundwater level occurrence, confined conditions within main roads, crossing with utility lines, water courses, railways, push-broaching starting spots.
- Gradients of excavation slopes are determined by the construction project. For work executed on slopes with gradient bigger than 1:1 or depth exceeding 3 m, measures preventing worker slipping or material collapsing must be taken. Slopes and bottoms of excavations in built-up areas, the stability of which is at risk due to loading or operation of existing structures, must be secured so as the structures concerned, and also their operation, if necessary, are not in danger of collapsing during excavation and safety of the excavation works is maintained.
- Piping, utility lines, cables exposed during excavation must be secured against sinking, buckling and disconnecting.
- Underground construction must be performed in compliance with the Main design and specified technological procedure. The project must deal with the technological progress of work, soil transport, other material transport, foundation pit drainage,

03/12/18

ventilation, flooding. Special attention shall be paid to securing surface structures against sinking.

- Drilling may be executed only in compliance with the construction project. Damage to underground structures, lines and other objects must be prevented. The drilling rig and list of trained workers must be approved by Engineer. Pipe push-broaching shall be executed with the use of a push-broaching device. No persons may be present in push-broached pipes.
- If a steel protection pipe is used for push-broaching, the starting pit shall be secured with suitable sheeting. Push-broaching shall be executed between starting pits directly. The starting pits shall be used for shafts.
- When two parallel piping lines are to be constructed, joint sheeting of both trenches is expected if the difference in their depths does not exceed 1 m. If one trench is deeper by more than 1 m than the other one, sheeting for both trenches shall be included.
- After the work completion, sheeting and its securing shall be removed. The removal shall be made in a way which will not damaged the surface or any part of new structures.

2.1.6.5. Fills and backfills

Backfilling and filling material compaction shall be performed in specified layers according to the piping material and in compliance with relevant regulations.

Unless it is contrary to valid legislation, the following may be generally stated:

- Only a suitable, incoherent material, approved by Engineer, may be used for backfills within local roads and drive-on areas. The suitable material is specified below. For backfills in main roads, compacted gravel sand shall be used over the whole height of the backfilling, unless specified otherwise in a relevant permission. When piping is situated in communications, basic rules must be observed in order to prevent defects due to incorrect technological procedures. The Contractor must observe these rules, monitor and evaluate them according to actual situation on the site.
- Soil unsuitable for backfilling of piping shall be deposited on a permanent dumping site and replaced with a suitable filling material by the Contractor at his own expenses! The risk of necessary replacement of unsuitable backfilling materials under communications with suitable gravel sand shall be included by the Contractor in the tender price.
- The basic problem of the work quality is the backfilling of foundation trenches which shall be made in compliance with valid regulations. The backfilling shall be made with compactable soil, approved by Engineer, compacted in layers (max. 20 cm). The soil moisture during compacting must not differ from the optimal moisture value determined by the Proctor standard compaction test by more than 3 %; moisture in loess soils must not drop during compacting below the optimal value by more than 2 %. The thickness of layers shall be adjusted to the compaction method used, trench width and material compactable qualities.

03/12/18

- Backfilling must be performed along both sides of a structure simultaneously in order to prevent uneven pressures. Pipe trenches shall be filled along their whole length after the piping is laid and relevant tests, approved by Engineer, performed. It is necessary to respect technical conditions for pipe laying supplied by the pipe manufacturer, and static assessment of the designed laying method, depending on loading and geological conditions.
- Trenches and pits located within the green belt shall be backfilled with excavated soil without larger particles with horizontal transfer to a temporary dumping site.
- Backfills must not contain organic soils, mud, peat, humus, and topsoil with organic substances content higher than 6 % of dry volume density of particles below 2 mm (ISO/CD 14688-2). This provision does not apply to surface finish of backfills (humus spreading).
- The following must not be used for backfilling without treatment or special measures:
  - Saline soils containing dissolved salts over 10 %;
  - Volume-unstable soils and rocks (absorptive clay and clay shale) in which changes in volume bigger than 3 % occur at normal climatic conditions;
  - Clays with yield point over 60 % or plasticity index over 40 %;
  - Clay soils with consistency index below 0.5;
  - Rock soils in which deformation occurs due to climatic actions and loading during the backfill lifetime (e.g. disintegration claystones.)
- Only soils suitable according to highway construction regulations shall be used for filling and backfilling.

2.1.6.6. Compacting

Unless it is contrary to valid legislation, the following may be generally stated:

- Within the whole active zone thickness the specified minimum compaction level of 100 % Proctor standard must be kept. The minimum deformation modulus value from the second loading cycle of Edef,2 = 45 MPa must be reached on the plain (the upper level of a mound). A technological procedure must be specified for the mound formation and the mound must be formed under an expert supervision. Relevant regulations shall be observed during the mound designing, forming, checking, and accepting.
- Compaction shall be performed with a suitable mechanical equipment in layers of max. 20-30 cm. Backfilling must be performed along both sides of a structure simultaneously in order to prevent uneven pressures. When compacting is executed close to a structure, piping must be prevented from buckling or damaging, and insulation from damaging. Sheeting and other auxiliary equipment must be removed before backfilling is made, or pulled out a the time of compaction.
- Compacting devices and technological parameters of compacting (thickness, layers, compacting device type, number and speed of compacting cycles) shall be selected by the Contractor and approved by Engineer according to the loose material properties

03/12/18

and required level of compacting. In serious cases the compaction level and technology shall be determined upon the compaction test results.

- Stability, or changes in properties of the loose material shall be checked every 2000 m3 of laid material, and the Contractor shall inform Engineer about any changes, should they occur.
- During the mound realisation, regular tests shall be performed acc. to relevant regulations. Unless specified otherwise, the following shall be checked during loose material compaction:
  - Loose material suitability;
  - Dumped layer thickness, number of travels, technological parameters of compaction;
  - Reached compaction by the relative density value ID.
- Required tests of compaction shall be made continuously (even on individual filling layers), number of tests acc. to relevant regulations, this is the basic precondition of the work quality.
- Control tests of the compaction level shall be performed especially in places where the compaction quality is in doubt or compaction parameters specified in the project were not met. Places of the compaction level tests shall be determined by Engineer.
- Compaction control in incoherent materials from samples collected shall be performed every 2000 m3, unless stricter requirements are specified in the project. With indirect methods, the test frequency shall be determined by the project, or if this is not the case, the test frequency shall be increased with indirect methods by at least three times compared to direct methods frequency. The compaction level control by indirect methods is given by relevant regulations.
- The results of compaction level control tests shall be handed over as specified in relevant regulations. A compaction test report shall be elaborated and attached to the Contractor's documentation during the construction handing-over. If the test results are unsatisfactory, the Contractor is obliged to recompact, adjust or replace the layer (structure part) in question at his own expenses so as the layer meets specified criteria. A loose material must be replaced if the required compaction level may not be reached by further compacting or adjusting.

2.1.7. Construction founding

2.1.7.1. Design principles

Principles of the design, static calculation, and construction of foundation structures must comply with valid legislation for civil engineering, geotechnics, construction founding and concrete structures.

Requirements on the geotechnical design shall comply especially with the provisions of ENV 1997-1:1994 – Eurocode 7, Geotechnical design, and shall be based on:

- Structure type and dimension;

03/12/18

- Construction conditions related to the surrounding area;
- Founding conditions;
- Groundwater level;
- Area seismicity;
- Mutual effects of the construction and the environment (hydrology, surface waters, seasonal moisture changes, area sinking, etc.).

The procedure shall executed according to the complexity of founding conditions, structure difficulty, and project preparation grade.

2.1.7.2. Geotechnical categories

Three geotechnical categories are determined:

Geotechnical category 1– simple and two-storey houses and agricultural buildings with the max. design load on masonry of 100 kN/m. Foundations in the form of common types of flat or pile foundations. Retaining walls and excavation sheeting if the total difference does not exceed 2 m. Excavation works must not be complicated and not executed below the groundwater level. Founding conditions must be sufficiently clear.

Geotechnical category 2 – simple, not problematic types of structures and foundations, and founding or loading conditions are not unusual or exceptionally difficult. Common structure types: flat foundations, raft foundations, walls and structures retaining or supporting soil, excavations, pillars and excavations for bridges, mounds and earth works, anchor blocks, etc.

Geotechnical category 3 – very large or unusual structures with abnormal risk, exceptionally complicated founding conditions, and structures in seismic regions.

2.1.7.3. Foundation soil

Categorisation of foundation soil under flat and pile foundations is determined by relevant regulations.

Within the project, suitability of a founding method for building structures is assessed according to the geologic survey, i.e. the foundation soil shall not be stressed to the bearing capacity limit according to the geologic survey. After exposing the foundation bottom, the Contractor must reassess the suitability of the founding method according to actual founding conditions. It means that upon mechanical properties of the foundation soil under the whole structure, the Contractor shall make a calculation of stressing the foundation soil according to limit states. The foundation soil must not be stressed to the limit state of its bearing capacity.

2.1.7.4. Depth of foundation

The depth of foundation of external structures with horizontal foundations must be sufficient to ensure that the soil under the foundation will not freeze. The foundation bottom must be situated in a non-freezing depth.

03/12/18

2.1.7.5. Foundation structures

The foundation structure type shall be selected according to the way of transfer of loading from the superstructure to the foundation soil and upon the depth of foundation. There are two foundation types: horizontal (flat) and vertical (depth) foundations. The structure type shall be selected by the Contractor's designer.

2.1.8. Water proofing

Water proofing protects the construction work against the effects of ground moisture and water. The water proofing design must be based on detailed geological and hydro-geological surveys containing data on the struck and standing groundwater levels and on a chemical composition of groundwater.

The waterproofing layer is formed by

- Base layer
- Damp-proof membrane
- Protective layer

2.1.8.1. Base layer requirements

Unless it is contrary to valid legislation, the following may be generally stated:

- Vertical and sloped proofing layers shall be laid on an 8-10 cm thick base concrete layer or foundation structure. The base layer shall be laid on natural ground on which a 25 cm thick gravel sand sub-base shall be made, serving as a drainage layer. The base concrete may be levelled with a concrete screed to create an even surface for laying bitumen felts. The base surface unevenness must nor exceed 5 mm per 2 m.
- Under a vertical waterproofing layer, a brick, concrete or reinforced-concrete base shall be made if the waterproofing layer shall be laid from inside the structure. If the waterproofing shall be laid from outside the structure, the base is formed by the basement masonry.
- The base must be dry, clean, firm, and without sharp protrusions to prevent puncturing of the bitumen felts. It must not contain cavities or fractures. Corners must be rounded.

2.1.8.2. Waterproofing bitumen felts

The basic function of waterproofing materials is the protection against water. Regarding material they may be coated, made on bitumen-felt, foil or coating materials base. However, their base is a supporting inlay provided with a protective layer.

The basic component of bitumen felts is a supporting inlay, with both sides provided with a cover bitumen layer. Categorisation of bitumen felts and waterproofing foils is specified in relevant regulations and may be as follows:

l 03/12/18

Type A bitumen felts: the basic layer is a machine rag felt weighing 330 or 500 g/m2 without a cover bitumen layer. Virtually unsuitable for waterproofing purposes because they are absorptive and little resistant to decay.

Type R bitumen felts: the basic supporting inlay is provided with a cover bitumen layer on both sides up to 1 mm thick. The waterproofing layer is laid on a dry base provided with a penetration coating while more layers of felt are applied into a hot bitumen coating and then a top coating is made.

Type S bitumen felts: the basic supporting inlay is provided with a cover bitumen layer on both sides over 1 mm thick. The bigger thickness enables the felts to be torched on the base. Suitable for insulating foundations and the whole substructure against ground moisture and water, some types also against pressure water. The latest types are modified with rubber containing mineral fillings.

Self-adhesive felts: without the supporting inlay, with bottom side provided with a self-adhesive layer protected with a silicon paper. They are incorporated cold. The minimum overlapping of these felts is 80 mm longitudinally and 150 mm transversally. Work with these felts may be executed with the minimum ambient air temperature 15 °C. At lower temperatures the felt as well as the base must be heated with hot air. The self-adhesive felts are used especially in places the conditions of which is not suitable for other felts. They are effective for waterproofing underground garages and spaces, water reservoirs, etc.

Bitumen felts are produced 1 m wide and 10 m long. The minimum recommended overlapping is 100 mm.

2.1.8.3. Protective layer requirements

The protective layer protects the waterproofing layer against adverse effects.

Unless it is contrary to valid legislation, the following may be generally stated:

- Vertical and sloped waterproofing (up to 45 degrees) shall be protected with cement screed min. 30 mm thick or with dilated concrete dab 30-80 mm thick. If the waterproofing is not protected directly with the floor, then the concrete dab is not necessary.
- The proofing layer on which a concrete slab shall be laid, must be protected with a 30 mm thick dab for a slab with max. thickness 200 mm, and with a 50 mm thick dab for a slab with max. thickness 600 mm. For thicker slabs the dab shall be 80 mm thick.
- Bitumen proofing must not be pulled or sheared. The maximum pressure on the bitumen felts protecting a structure against moisture changes is 0.5 MPa. The waterproofing shall be used from the sides affected by hydrostatic pressure.
- Special requirements are laid on the protective layer against mechanical damage of vertical waterproofing layers. Unless specified otherwise in the Employer's design documentation, these shall be protected with a 100 mm thick brick retention wall made from solid bricks up to 1.5 m before backfilling with soil is executed. The retention wall must be dilated every 6 m. Rubber boards min. 7 mm thick, or plastic sheets min. 3 mm

03/12/18

thick may be used, too. It is also possible to use geotextiles with min. surface density of 500 g/m2.

2.1.8.4. Waterproofing against aggressive water

If the groundwater is aggressive within the meaning of relevant regulations, both the damp-proof membrane and protective layer must be protected against its effects. The protective layer design must then comply with provisions of the relevant regulations.

Unless it is contrary to valid legislation, the following may be generally stated:

- There are three types of an aggressive environment: slightly aggressive, medium aggressive, and strongly aggressive.
- Slightly aggressive environment: concrete, reinforced-concrete or mortar mixes shall be provided with primary protection. For concrete structures this protection includes selection of suitable cement, water-resistant concrete, and a thicker reinforcement protective layer. Retention walls shall be made of hard-baked bricks laid in special mortar or mastic.
- Medium and strongly aggressive environments: since the primary protection is not sufficient, secondary protection must be added in the form of further waterproofing or bitumen coatings (vertical and sloped surfaces), or cast bitumen (horizontal surfaces). Acid-proof bricks may be used, too, laid in bitumen-cement mastic.
- With the occurrence of flowing aggressive water, clay shall be used as protection of structures against such water.
- If the environment aggressiveness is assessed according to EN 206-1, the concrete design, production, laying, and curing must also comply with this standard, as well as the protection of concrete structures against an aggressive environment.

2.1.9. Concreting and use of reinforced-concrete

2.1.9.1. Concrete types and water-resistant concrete

Minimum requirements on the concrete quality according to EN 206-1 (unless specified otherwise in the Employer's requirements):

Tanks, pits, chambers with wastewater	C30/37 XA1
Tanks, pits, chambers with potable water	C30/37 XC4
Tanks, pits, chambers with wastewater exposed to frost	C30/37 XA1
Tanks, pits, chambers with wastewater exposed to frost	C30/37 XC4
Foundations, concrete structures in dry environment	C25/30 XC2
Concrete filler in dry environment	C20/25
Concrete filler exposed to wastewater effects	C30/37 XA1
Blinding concrete	C12/15
Concrete encasement of structures	C12/15
Concrete saddles	C12/15

03/12/18

Water-resistant concrete is a collective name for watertight concrete and lasting concrete:

Watertight concrete – concrete resisting to pressure water to such an extent that its front bears no visible seepages or wet stains.

Lasting concrete – concrete resistant to mechanical, physical, chemical, and atmospheric effects regarding their duration and action.

Concrete with increased content of admixture water – concrete containing admixture water of 210 l/m3 dense concrete or higher at the compaction termination moment. Usually ready-mixed concrete, pumped or cast concrete, or concrete without coarse aggregate.

Tough concrete – concrete substituting lining of natural rocks (stone), resistant to abrasion and hammering by sediments drifted by flowing water and to impacts of floating objects, as ice floes, tree trunks, etc.

During the project realisation especially water-resistant concrete shall be used. The basic technical requirements on water-resistant concrete regarding its location in a structure, position in relation to water level, stressing method, and structure thickness are specified in relevant regulations.

Unless it is contrary to valid legislation, the following may be generally stated:

- Concrete water-tightness shall be determined as specified in relevant regulations. Concrete may be considered water-resistant, if the results of a water-tightness test on equipment specified in the relevant regulation are equal to the maximum seepage value of 50 mm or less, and the average value is equal to 20 mm or less. The water-cement ratio must not exceed 0.55.
- During the water-tightness test the test sample is loaded with 0.1 MPa for the first 48 hours, then the pressure is increased to 0.3 MPa for 24 hours, and at the end to 0.70 for 24 hours.
- The maximum permissible hydraulic pressure on the structure depending on its thickness resisting to the water seepage is specified in relevant regulations.
- Concrete exposed to permanent or, in the area of water-level variation, to intermittent effects of aggressive waters is required to be resistant against corrosion. The protection level (primary, primary and secondary, secondary protection) shall be selected according to the water aggressiveness level in compliance with relevant regulations.
- Chemical corrosion resistance is specified in relevant regulations. Concrete is considered resistant to chemical corrosion if tests prove that it is watertight, and – within the meaning of the relevant regulations – its porosity is not higher than 16 % vol., or its absorptivity is not higher than 6 % w.

2.1.9.2. Concrete classes

Concrete classes are specified in relevant regulations and mark the concrete quality according to the requirements on its compressive strength. Concrete is produced in classes for which requirements are specified on cylinder and cube strength in MPa at the age of 28

03/12/18

days. The concrete classes are from C8/10 to C100/115 (EN 206-1) according to the guaranteed compressive strength in MPa. Concrete consistency must comply with ISO 4103.

2.1.9.3. Foundation soil

Prior to concreting and using reinforced-concrete, the Contractor must assess the foundation soil characteristics according to relevant regulations. The Contractor is obliged to inform Engineer on all findings related to facts which could have adverse effects on the terrain bearing capacity and sinking and possible aggressiveness of soil or groundwater. Further, effects of frost to the foundation bottom must be assessed. The Contractor is obliged to invite Engineer to inspect and approve the foundation bottom bearing capacity necessary for further construction.

2.1.9.4. Bonding materials

General

The methods of concrete production and storage are specified in EN 206-1. Engineer, upon his request, must be informed about the concrete composition. If concrete not complying with standard characteristics is used, the Engineer's approval must be obtained. Requirements contained in Montenegro technical standards related to aggressiveness resistance must be observed.

Cement type

A cement type complying with these specifications or with the Engineer's instructions shall be used. For the production of concrete in contact with sewage or waste water or exposed to a wet environment or atmosphere, only cement resistant to sulphates shall be used, unless otherwise approved by Engineer. The Portland cement shall be used in all other concrete types, unless otherwise approved by Engineer.

Cement types complying with the requirements of EN 197-1 shall be used for the water-resistant concrete production:

- Portland slag cement marked CEM II/A-S and CEM II/B-S, suitable for concrete with increased resistance to corrosion;
- Blast-furnace cement marked CEM III/A, CEM III/B and CEM III/C, suitable for massive and medium-massive structures;
- Blast-furnace cement marked CEM III/B, CEM III/C characterised by resistance to sulphates and suitable for concrete resistant to sulphate aggressiveness;
- Portland cement marked CEM I, suitable for winter concreting and for thin-walled concrete resistant to repeated effects of frost (frost-resistant).

Cement supply and storage

Cement transport and storage must comply with provisions of relevant regulations.

Prior to ordering or supplying cement to the construction site, the Contractor shall submit a detailed list of sources, country/countries of origin, and trade names of cement producers to Engineer for approval.

l 03/12/18

Cement shall be supplied in silos, large-volume containers or closed paper bags according to its quantity and place of work performance. If cement is delivered to the site by trucks or other vehicles, it shall be reasonably protected against weather effects and contamination by dust, sand and organic substances. Engineer shall refuse any cement proven to have been deteriorated by water.

All the cement, except that stored in silos, shall be protected against atmospheric conditions, stored in a watertight and reasonably airtight building used only for this purpose. The building floors shall be elevated at least 300 mm above ground to prevent moisture absorption.

Cement refusal

Regardless of a test certificate submitted, Engineer may refuse any cement that failed other tests. Engineer may also refuse cement deteriorated due to inadequate protection, for any other reasons or in any other case when the cement lacks the quality required. The Contractor shall immediately remove all refused cement from the site at his own expenses.

2.1.9.5. Aggregate

Compact aggregate of class A, or class B according to EN 12620, shall be used for water-resistant concrete; fine aggregate shall be of class A.

Absorptivity of natural aggregate used for concrete resistant to chemical corrosion shall not exceed 1 % of the dried aggregate weight.

2.1.9.6. Concrete water

Water for producing and curing concrete must comply with relevant regulations.

Unless specified otherwise, water used for all purposes on the construction site shall be potable, clean, fresh, and without undesirable content of dust, organic substances, alkalis, salts, or other impurities, and shall comply with the requirements of relevant regulations.

If requested by Engineer, the Contractor shall supply samples of water proposed to be used during the construction so that Engineer can perform tests of the water suitability for the purpose given. The samples shall be supplied in a sufficient quantity prior to the tests performance and according to the schedule within the contract validity in compliance with the Engineer's instructions.

2.1.9.7. Concrete additives and admixtures

An additive is a material added to concrete during its mixing in order to ensure a change of properties of the fresh concrete. Additives containing calcium chloride shall not be used.

Additives shall be used only if approved by Engineer and with respect to the manufacturer's instructions. Added quantities and method of usage must be approved by Engineer, who shall receive at least the following information:

Typical added quantity and adverse effects (if expected) due to the increase or decrease of the added quantity of the additive;

Chemical name(s) of the main additive(s) in the mix.

03/12/18

For water-resistant concrete coming to contact with potable water, only additives or admixtures with proven health harmlessness may be used.

Additives shall comply with relevant regulations.

2.1.9.8. Concreting technology

Provisions of EN 206-1 and other relevant regulations apply to concrete production, processing and curing.

The delivery shall include all works and auxiliary structures related to the production, transport, pouring, and curing of concrete, including casing with all auxiliary elements (anchoring, bracing).

Advance workings

Prior to the fresh uncompacted concrete and concrete production commencement, tests according to the provisions of EN 206-1 shall be performed.

Prior to the concreting commencement, the Engineer's written approval must be obtained. All construction equipment and materials required during concreting and for concrete curing shall be available on the construction site before the concreting commencement.

Concrete shall be poured and compacted under the direct supervision of a competent Contractor's representative.

Fresh concrete transport

During the transport of fresh concrete it must not be dismixed or otherwise deteriorated, e.g. by loosing any of its components, due to atmospheric effects, contamination, etc. The transport vehicle must be clean and empty and comply with the conditions specified in the transport procedure.

The primary transport time shall be determined so that after the termination of fresh concrete handling and processing on the site, at given ambient temperature and temperature of the concrete mix, the fresh concrete will reach the maximum value of 0.5 MPa required during the setting tests.

Other provisions related to concrete and ready-mixed concrete transport are given in EN 206-1.

Concreting

Concrete shall be poured as soon after its production as possible in a rate preventing its unnecessary transfer. In no case it shall be poured before its initial setting. Should the pouring be delayed after mixing and the concrete will start hardening, it must not be used and shall be removed from the construction site.

Pouring in layers

Concrete shall be poured in approved quantities and if possible in horizontal layers in a thickness allowing it to join perfectly with bottom layers by vibration, digging, or forming.

03/12/18

Unless otherwise approved by Engineer, concrete shall not be laid from a height exceeding 2m.

Underwater concreting

Concrete shall not be poured underwater without the Engineer's written approval. If underwater pouting is necessary, the Contractor shall submit a detailed technological procedure and schedule of works to Engineer for approval.

Concreting under special climatic conditions

Unless it is contrary to valid legislation, the following may be generally stated:

- Conditions with higher temperatures are specified in relevant regulations, it is an environment with an average daytime temperature during at least three successive days exceeds 20 °C. In such conditions, the Contractor shall pay increased attention to the concrete surface curing in order to prevent it from cracking or rupturing. The Contractor shall perform concreting either early in the morning or in the evening as ordered by Engineer.
- Conditions with low and below-zero temperatures are specified in relevant regulations. Low temperature means that the average daytime temperature drops below 5 °C for at least three successive days (Portland cement). If concreting in cold weather is considered in the schedule, the Engineer's instructions and provisions of relevant regulations must be observed.
- Concreting at temperatures below 5 °C is forbidden, because the concrete surface must be heated to prevent its temperature from dropping below 5 °C for at least 72 hours. Temperature of water used for concrete curing must not be less than 5 °C.

2.1.9.9. Casing

Casing of monolithic structures complying with relevant regulations must be reliable and resistant to distortion caused by the total loading effects, which could lead to impermissible deviations of geometrical parameters of the finished concrete structure. The design must take into account the co-action of all horizontal forces and impact effects of fresh concrete transport and processing.

Casing and its supporting elements must be secured against shifting, loosening, buckling, or collapsing, and must allow gradual demoulding without damaging the concrete structure.

The method of casing realisation must ensure the structural part purpose and dimensional tolerances of the concrete surface. All dimensions given in drawings are final. Casing must be removed carefully and not before the time determined passes.

Increased requirements on demoulded concrete curing – covering and watering for at least 14 days.

Adjustment of construction joints:

- Profiling
- Inserting an expansive belt

03/12/18

2.1.10. Buildings

2.1.10.1. Vertical supporting structures and partition walls

Vertical supporting structures include walls, pillars, columns, and their combinations. According to the material they are divided to masonry wall structures, monolithic wall structures, and prefabricated wall structures. All these types must meet the requirements on specified bearing capacity. They must also meet further requirements regarding e.g. resistance to wear, thermal and noise insulation, fire resistance, non-absorptivity, harmlessness, maintenance.

External supporting and partition walls (masonry or prefabricated) must also meet requirements on environment comfort, especially thermo-technical aspects, and requirements on acoustics of buildings and sound-proofing as specified in ISO 717.

Further requirements on functional properties include mechanical stress, environmental resistance (biological effects, temperature, moisture, chemical substances, noise, vibrations, etc.).

2.1.10.2. External envelope

External walls, separating external environment from the interior space, must meet specified requirements for their whole lifetime and safely and reliably resist to adverse environmental effects according to relevant regulations. Requirements on the external envelope structure result from the need to create an optimal interior comfort.

External envelopes must meet static requirements, i.e. must safely transmit load from their own weight, must be sufficiently rigid and stable to withstand expected effects. Load types affecting external walls are specified in relevant regulations. If a wall serves also as a supporting structure, it must transmit load from other supporting structures into the foundations.

Single-layer external walls must meet requirements on both bearing capacity and thermal-technical properties. It must be remembered that mortar used for sealing joints decreases thermal properties. Therefore it is always necessary to assess the whole structure. Requirements on these properties of building structures are defined by relevant regulations.

Requirements on fore safety of external envelopes and fire safety of thermal-insulation systems are defined by relevant regulations.

2.1.10.3. Ceiling structures

A ceiling structure is an integral part of the supporting structure. The basic requirement related to ceiling structures is their bearing capacity, stability, and rigidity. Further requirements result from their function (static, thermal-insulating, sound-proofing, fire-safety, architectonical).

Ceiling structures must safely transmit both constant load (own weight, partition walls) and live load (operation). Climatic action (snow, wind, temperature) is another important factor of designing ceiling structures.

03/12/18

Fire-resistant ceilings and ceilings located inside fire-resistant spaces must meet fire-resistance requirements corresponding to standard values. These structures must be made of materials complying with standard values.

The ceiling structures must meet all requirements on thermal-technical properties in terms of heat transfer in stabilised as well as varying thermal conditions based on standard values. Their design must ensure that thermal resistance of the structure is bigger or equal to a standard value of thermal resistance.

Ceilings must also comply in terms of required sound-proofing.

2.1.10.4. Floors

Floors must comply with requirements on thermal-insulation properties at stabilised as well as varying temperatures, and on sound-proofing of the building defined by standard values. The floor structure must be provided with a skid-poof surface layer according to the Contractor's design documentation. Wall and floor surfaces must be easy to clean and maintain.

2.1.10.5. Ramps, stairs, ladders

A staircase is a space in which stair elements are located. It connects individual storeys vertically, while providing safe ascend to/descend from any storey. It may be completely or partly enclosed with staircase walls. No room may be located within the staircase. Lighting and ventilation of the space must be provided.

The division of staircases is specified in relevant regulations. Requirements on fire resistance according to a relevant regulation and on the type of staircase elements must be met only by those staircases that are part of an escape route and that are intended for evacuation of more than ten persons.

Each storey must be accessible through at least one staircase (main staircase). Another staircase (back staircase) is designed mainly as an escape or emergency route in compliance with fire safety requirements. The minimum permissible distances of individual steps shall comply with the requirements of relevant regulations.

A stair step is a basic element of a staircase. The minimum width of a rectangular step and halfpace is specified by standard values in relevant regulations.

Unless it is contrary to valid legislation, the following may be generally stated:

- The ratio between the height (h) and width (b) of a stair step must be 2h + b = 630 mm. This value may be reduced to 600 mm provided that the maximum permissible gradient of the stair flight is not exceeded. The minimum step width on the walking line b = 210 mm, and minimum halfpace width is 250 mm.
- A stair flight must consist of min. 3 and max. 16 step heights. Auxiliary staircases may consist of max. 18 steps.
- The step halfpace must be horizontal without sloping in either longitudinal or transversal directions. The landing surface of interior staircases may be sloped longitudinally with the maximum gradient of 7 %.

03/12/18

- The surface treatment must correspond to operational conditions imposed on stairs in question. The minimum sliding coefficient of landing surfaces of interior staircases is 0.3. The staircase headroom and clearance must comply with relevant regulations.
- The gradient of a staircase serving as an escape route for more than 50 persons must be 25-35°. Recommended step height is 150-180 mm. Escape routes must allow persons present in the building to escape quickly and safely in case of fire. The maximum distance between escape staircases within a building is 60 m.
- The stair flights must be provided with railings according to relevant regulations. The railing height must meet specified standard values, its minimum height is 1,100 mm, unless specified otherwise. The railing structure is arbitrary, but it must meet requirements on safety, preventing persons from falling over it and also through between its bars.
- Ladder stairs may be designed for occasional usage by a limited number of persons (for example access to the roof) according to requirements of relevant regulations. The minimum permissible width of a ladder staircase step is 150 mm. If the ladder height exceeds 2.5 m, it must provided with a protective cage.
- In certain cases (e.g. to allow vehicle movement) staircases may be replaced with sloped ramps, according to relevant regulations. Technical requirements related to ramps are specified by standard values, their minimum width must be 1,100 mm for pedestrians. The maximum gradient is 1:6 for interior and 1:8 for exterior ramps. The minimum headspace is 2,100 mm, min. sliding coefficient is 0.3 + tg alpha (alpha is the sloped ramp gradient).
- The maximum gradient of direct ramps for vehicles is 14° in interior and 17° in exterior.

2.1.10.6. Chimneys and smoke flues

A chimney is usually a vertical structure with one or more flues, intended for discharging combustion products (from the uptake to the mouth) and for trapping condensate or solid parts of flue gases (from the uptake to the foot).

The basic regulation for the design and construction of chimneys specifies technical conditions and fire safety requirements for the installation and use of fuel appliances, electrothermal appliances, and central heating equipment, and for the construction and use of chimneys and smoke flues. The chimney design must further comply with relevant regulations, especially EN 1443, EN 1457, EN 1806, EN 13502, EN 1856-1, EN 1859.

The design and construction of chimneys and smoke flues must ensure safe exhausting and dispersion of combustion products to the atmosphere, while meeting all operational conditions for the connection of appliances without accumulation of combustion products and safety hazards. Their design (esp. in terms of their height) must also comply with legal regulations.

Neither chimneys nor smoke flues may reduce the output of appliances. Chimneys must resist to both vertical and horizontal loads, while meeting thermal and pressure requirements,

l 03/12/18

gas tightness, durability, and other requirements on materials used acc. to relevant regulations.

The connection of fuel appliances to chimney and smoke flues is designed according to a legal regulation which specifies technical conditions and fire-safety requirements for the installation and use of fuel appliances, electrothermal appliances, and central heating equipment, and for the construction and use of chimneys and smoke flues

2.1.10.7. Roof structures

A roof is a building structure separating interior a exterior environments. It has a protective function, protects the construction work and its spaces against climatic and other external actions and effects. The roof has three parts: roof cladding, main supporting structure, and underside.

The external effects may be long-term (chemical emissions), periodically repeated (variation of temperature and sunshine), short-term (wind, snow, rain), and exceptional (seismicity).

The roof must provide safe collection and draining of rainwater, snow and ice, even with blocked inlets, must resist to the effects of acid rain, mechanical effects of rain (e.g. hails). Its structure must prevent water from entering the building structure.

The roof pitch is given by the roofing material, elevation of the building, and local climatic conditions. The pitch depends also on the roof supporting structure, and must comply with provisions of relevant regulations.

The roofing must provide mechanical and waterproofing compactness and protection against sunshine and ultraviolet radiation. The roofing must be resistant to climatic actions. The minimum pitches and roofing composition are specified in relevant regulations.

The roof must resist to fire effects according to the Contractor's design documentation. If the roofing is situated above fire hazardous space, it must be made of a non-combustible material, or must have fire-resistant properties.

Loading of roofing structures is specified in relevant regulations. The basic load of high buildings comes from wind. The wind flow causes underpressure and suction which must not damage or destroy the roof structure. The structure is required to resist to wind load.

Roofs must be designed with respect to the future operation. This applies especially to walk-on roofs (parking space, green roofs, terraces, etc.). These roofs must provide a direct access.

Requirements on interior safety include the provision of the required moisture and temperature conditions, noise level, and required lighting inside the building. In terms of acoustic conditions, roofs must provide sound and impact insulation according to relevant regulations.

Roof structures must meet requirements on thermal-technical properties related to heat passage, vapour and air passage through the structure, upon standard values of thermal resistance of structures, distribution of internal surface temperature on the structure, thermal

03/12/18

inertia of the structure related to a room or the building, vapour diffusion and moisture balance, air permeability of the structure and its joints.

Fire resistance shall comply with relevant regulations.

All works on the roof cladding must be executed in a qualified and quality manner according to relevant regulations.

2.1.10.8. Surface finishes

Plaster is a surface finish of walls and ceilings formed by hardened mortar mix.

Unless it is contrary to valid legislation, the following may be generally stated:

- The medium thickness of external plasters is 20 mm (min. 15 mm), of internal plasters 15 mm (min. 10 mm). Single-layer plasters from industrially produced mortar mixes may have the medium thickness 10 mm (min. 5 mm). The minimum thickness of heat-insulating plasters is 20 mm.
- If ready-to-use plaster is used, manufacturers' instructions for preparation must be observed.
- Requirements on the shape of performed plasters are specified in relevant regulations and are given by limit tolerances, overall surface evenness, and local surface evenness. General requirements on accurate processing of plasters and on performed internal plasters are specified in relevant requirements. If the plaster surface is treated, then its coarseness must meet requirements of relevant regulations.
- Plaster water-tightness must meet requirements of relevant regulations – the limit value is 2 l/m2. External water-repellent plasters must have the surface absorptivity coefficient according to a relevant regulations lower than 0.5 kg/m2/h0.5.
- Thermal-technical properties of heat-insulating plasters – thermal conductivity coefficient must be lower than 0.2 W/m.K. This requirement is met if the plaster volume density in a dry state is lower than 600 kg/m3.
- Requirements on bonding and filling materials are specified in a relevant regulation, containing also requirements on the quality control of mortar for plasters. Vapour-permeability of mortar shall be checked according to a relevant regulation.
- Mortar mixes must be volume-stable. This is proved by a cake test according to a relevant regulation. The mortar is volume-stable if no radial cracks along its edges or a mesh of shallow cracks appear on the cake face. Mortar must be vapour permeable.
- The crucial aspect of plaster durability is the joining of mortar with the base material. Thus maximum attention shall be paid to the technological procedure of plasterwork. The base material must be free from dust and other impurities and as even as possible, absorptive materials must be wetted, uneven absorptive materials shall be provided with a lime-cement or cement coat; finished lime, lime-cement, and cement plasters shall be cured during hardening to prevent them from drying out.

1 03/12/18

2.1.10.9. Windows, doors, and openings

The window and door structures must provide adequate rigidity preventing them from sinking or any other deformations during normal operation, and must resist to loading, including its own weight, wind load, for open wings without damage, shifting, or deterioration of their function.

Requirements related to thermal-technical properties at constant temperature must be met according to the Contractor's design documentation. The heat-transfer coefficient, incl. the frame and hinges, is specified by standard values according to the building character.

Opening in structures with fire function (doors, gates, trapdoors) must be equipped with fire closures with respect to their type and required fire resistance. Doors situated along escape routes must provide easy and quick passing.

2.1.10.10. Sheet-metal work

Sheet-metal construction works shall comply with provisions of relevant regulations.

Unless it is contrary to valid legislation, the following may be generally stated:

- Permanent joints of galvanised sheet-steel, galvanised thermally-conditioned steel or copper sheet must be rivetted or soldered, of zinc-coated sheet metal only soldered, and of aluminium sheet or sheets with a protective layer soldered and sealed.
- Eaves drips must be suspended as an flashing crest, suspended crest and/or attached ledge, or as a gutter cut into a slope with its rear side attached with nails.
- The above-listed components shall be mounted with nails to a base material with 10cm spaces. For metal wall cladding with two eaves drips, the flashing is mounted on both sides and inner distance shall be added to outer length.
- Valleys, of half-circular or square cross sections, shall be mounted with holding clamps.
- Dormers, crests, and fire-separation walls (flashing on the gable edge) shall have their eaves drips on one side which shall be mounted with zinc-coated sheet-metal split pins with max. spaces of 30 cm, if a continuous suspended strip (joining plate) is not required. The top edge of flashing shall overlap the roofing material. A check fillet corresponding to the roof dimensions must be made along the roof edge. A vertical fillet shall be included in the bid. Sheet-steel clips must be used for mounting. In bitumen roofs the strip shall have minimum width 15 cm for affixing sealing.
- Sheet steel on the roof surface shall be fixed with wire nails or clips. Coated eaves drips, covers or sheet-steel profiles shall be laid as joint cladding.
- Window sill sheets (covering joints or jointing sheets for protruding parts of the structure) shall be fixed through grooves or permanent joints, depending on the Contractor. They shall be mounted with sheet-steel clips, or as joint cladding on the roof.
- Flashing consists of a baseboard, flange and sheet-steel head. Shape, dimensions, and finish of the board depend on the roofing type. The flange is of a conical shape. Its lower end is provided with a bend for connection of waterproofing by riveting, or joining

03/12/18

on the baseboard. The upper edge must tightly fit to the circumference of the flashed element. The sheet-steel head is provided with a bend on its upper end or with a sleeve for fixing the joint with a screw. The joint shall be sealed with a suitable sealing material. The baseboard shall be smooth and mounted to the base with horizontal clips.

- Double-sided fillet shall be included in the bid. Seams must be covered according to the gradient. Sheet-steel shall be mounted with crown clamps made of zinc-coated strap steel of min. size 25/3 mm and mounting corresponding to the lower structure, in max. spaces 1.0 m.
- The upper edge shall be bent, the bent section with plaster is slightly sloped outwards, and the lower edge is provided with a groove. Wall hooks or nails shall be used for mounting.
- The upper section is bent forwards under 45° and with 1cm width, the groove is joined to the lower edge and fixed to its place. Wall hooks or nails shall be used for mounting.

2.1.10.11. Ventilation systems

The ventilation system must provide such parameters of interior air in ventilated spaces that meet relevant hygienic and technological requirements. The ventilation system operation must be safe, economical, without hazards to human health and the environment, and must meet requirements on limit values related to noise and vibrations. The ventilation system design must prevent flue gases and fire from spreading.

The design and installation of exhaust piping for contaminated air must not cause any damage or hazards to the environment.

A ventilation system controlling the vent air temperature must be equipped with an automatic regulation system.

2.1.10.12. Heating systems

Thermal comfort in interior spaces shall be provided with a suitable heating system, either central heating or special heating. The system design shall comply with provisions of relevant regulations (EN 12 831, EN 12 828), documentation of operation shall be prepared according to EN 12 170 and EN 12 171.

Central heating systems consist of the following components:

- Heat source
- Piping system
- Heating element

Special heating systems consist of the following components:

- Heat source and heating element in one unit located directly in the room.

03/12/18

The central heating produces a heat-carrying agent in a central heat source. The heat-carrying agent is distributed through a piping system into heating elements. The heat source may be located in the basement or directly in heated spaces. The heat-carrying agent circulation is usually provided by a circular pump.

Every room shall be heated according to its function in the design documentation. The heat losses calculation in buildings is specified by standard values.

The piping system may be designed from:

- Steel threaded seamless pipes, or steel plain pipes. Both types are welded.
- Plastic – polyurethane pipes
- Copper pipes

2.1.10.13. Ceramic paving and tiles

Unless specified otherwise, paving/tiles shall be glued to the floor/walls in strips, or cut to size, according to the design documentation. This includes preparation of the base material, laying, filling joints, and cleaning the surface of paving/tiles.

The selection and use of a suitable type of tiles depend on the surroundings, hygienic requirements, architectural requirements, and requirements on maintenance and structure protection. Unless specified otherwise, first-quality glazed paving and tiles with the highest hardness and abrasive quality with non-slip finish shall be used. Frost-resistant paving shall be used for exterior areas. The paving type and colour must be approved by ENG in advance.

Before the base material for tiles is treated, all plastering must be finished and window/door frames installed. Further, blind floors must be finished and devices related to the tiled surfaces installed.

The base material surface must be even, clean and roughened. The evenness tolerance of the base material prepared for a rendering coat must not exceed standard values. The rendering coat/adhesive shall be applied to an even and hardened base material free of dust and loose particles, thoroughly wetted. Tiling of large surfaces must be divided to smaller units with dilatation joints. In the place of the dilatation joint, the rendering coat must be interrupted over the whole width of the joint.

Piping installations under tiles must be provided with thermal insulation and installed in grooves no to protrude from the brickwork.

Unless specified otherwise, the calculation shall be made for laying paving and tiles on a finished base of mortar or special adhesive. The laying includes cutting the paving/tiles into any shapes.

Prices for all tiles, unless specified otherwise, shall include filling joints with cement-based joint mortar of specified colour, 3-7 mm wide for all types of paving and tiles. For joints with an increased risk of cracks occurrence and in corners, an elastic material shall be used. Corner ledges shall be used only if approved by ENG.

03/12/18

2.1.11. Water connections and house water plumbing

2.1.11.1. Water connections

Unless it is contrary to valid legislation, the following may be generally stated:

- The water connection is a section of piping connecting the distribution branch of public water supply with interior plumbing in a real estate or building, except a house meter if installed. The water connection is usually connected to the public water supply through a drilling device with a closure. The connection to the distribution branch with the closure is part of the public water supply. The water connections brings water from the public water supply to the real estate or building connected to the public water supply.
- The water connection connects the public water supply with interior plumbing. The water connection starts in the point of connection to the public water mains and ends before the main stop cock. The main stop cock may be situated either within the plot or inside the building. Each real estate may be connected to the public water supply through one water connection. In the point of connection to the public water supply, a stop cock with a surface box assembly.
- The location of individual connections in terrain (in trenches), distances between them, their depth, adjustments in their laying and connecting shall comply with a relevant regulation and other specialised standards.
- The connection route shall be determined in the design documentation. It shall be designed to be as short as possible towards the public water main. The water connections must be laid in a safe distance from building foundations, in a non-freezing depth.
- Piping shall be laid on a compacted gravel sand or sand bedding according to the manufacturer's instructions. Backfill up to 300 mm above the piping shall be of the same material as the bedding.
- The water-meter set (if required by the project) shall be located in a metering shaft as close to the plot border as possible (behind the street line). In exceptional cases the water-meter set may be located inside the building. The metering shaft must be of such dimensions so that the water meter is easily accessible for readings, assembly and repairs.
- Unless specified otherwise in the project, a protection pipe must be used for a connection passing through a wall. In any case the designed piping entries to the structure shall not transmit stresses from the building structure to the piping and penetration of water, moisture or gases to the structure shall be prevented. The passage must be watertight and gastight.
- Parallel running and crossing with other lines shall be made according to relevant regulations.
- Water connections generally are not water construction works. As water construction works they are considered only if they:

03/12/18

- Serve for supplying water to industrial and agricultural structures,
- Serve for supplying a group of structures if required by the distribution piping system,
- Are built for a construction for which equipment for water pressure increase is built,
- Are longer than 100 m and supply water in an average daily quantity over 0.5 l/s.

2.1.11.2. House water plumbing

House water plumbing is water piping including accessories and technical equipment connected to the water supply main, starting with the main stop cock of the house plumbing. Design of house water plumbing is specified in relevant regulations. Fire mains are specified in relevant regulations. Equipment for hot water preparation may be designed according to a relevant regulation.

Unless it is contrary to valid legislation, the following may be generally stated:

- House water plumbing is connected to public water mains or own sources. Supplying from own source is performed using a pumping station. In high buildings, the house plumbing is divided to water pressure zones. The first zone is supplied directly from the public water main and the following ones are supplied with the help of automatic pressure pumping stations.
- If two various sources are use, equipment with open storage tank may be used only for service water distribution. Wells must be located at sufficient distances from any source of contaminations.
- The whole water supply system must be designed in compliance with specified hygienic requirements.
- For piping passage through a wall, a valve chamber is recommended to be constructed. Horizontal water piping must not run together with central heating piping trough crawl-way channels. Piping running in grooves must remain free after being covered. Piping must not be laid into exterior walls, ceilings above subways and undercrossings, single-layer roofs, and chimney shafts. Connection of riser piping to horizontal piping must prevent effects of the riser piping weight and temperature changes to piping joints.
- Pipe valves shall be mounted before the water meter, as the main stop cock, as the main valve of the structure, as an outlet valve behind the main valve of the structure, against water reflux (reflux valve), as a drainage valve behind a flap trap, on those parts of piping intended only for summer operation, as a sectional valve in larger systems, before each riser piping, before each operational unit, before each group of fixtures, before each technical and technological equipment. Closing valves must be of the same inner diameter as the piping to which they were fitted.
- House plumbing is usually made of plastic pipes (HDPE, PP, PVC), cast iron pipes (socket or flanged pipes), steel threaded common pipes (welded and seamless), copper, brass, and multiplayer pipes (e.g. plastic with aluminium inlay).

03/12/18

- It is forbidden to use black steel pipes, pipes with inner bitumen coating, lead pipes, and pipes made of plastic materials not meeting temperature requirements.
- Potable water piping connected to the water distribution system must not be connected to other water sources. The main water valve must be accessible and its location must be visible and permanently marked.
- If the water supply system is divided to potable water supply and service water supply, piping in building must be clearly marked.
- Water piping inside buildings must be insulated in places with the risk of freezing. Hot service Domestic hot water piping must be always insulated, piping made of corrodible materials must be protected against corrosion.
- Cocks/valves of other than potable water must be marked visibly with a label marking service water.
- House water system providing fire water supply in compliance with standard values must be equipped with a system of hydrants with stable pressure and immediate availability of fire water supply. Unless specified otherwise in the construction project, the fire water distribution system shall be made of steel pipes. Fire flow shall be determined by a fire officer for a half-hour period.

2.1.11.3. Testing of house water plumbing

The pressure test of house plumbing shall be carried out according to a relevant regulation.

Unless it is contrary to valid legislation, the following may be generally stated:

- Before carrying out the pressure test, all sections of house plumbing must be rinsed with harmless water and blown down at its lowest point. The pressure test shall be carried out either in parts or together according to the plumbing extent. They consist of:
  - Pressure tests of piping,
  - Final pressure test of house plumbing.
- During the pressure test of piping only piping is tested (without thermal insulation, outlet and safety valves, fire valves, fixtures, devices, etc.).
- Piping is tested with harmless water and 1.5x operational pressure, min. 1.0 MPa. The water testing overpressure must not drop within 900 seconds by more than 0.05 MPa. No water leakages may be found on the piping during the test. If a bigger pressure drop occurs, the defect must be removed and the test repeated.
- The final pressure test of house plumbing must be carried out after the piping has been insulated, and accessories, fixtures, apparatuses and equipment installed (outlet and safety valves, fire valves, pumping units, hot water preparation devices, etc.).
- During the final pressure test the house plumbing is tested with harmless water and operational pressure, min. 0.7 MPa. The water testing overpressure must not drop within 900 seconds by more than 0.05 MPa. No water leakages may be found on the

03/12/18

piping during the test. If a bigger pressure drop occurs, the defect must be removed and the test repeated.

2.1.12. Sewer connections and house sewerage

2.1.12.1. Sewer connections

Unless it is contrary to valid legislation, the following may be generally stated:

- Wastewater may be discharged into the public sewer system only upon a relevant authority's permission, if the applicant can prove that the wastewater will not:
  - Damage the sewer system and wastewater treatment plant, and endanger employees during treatment;
  - Endanger the WWTP operation, sludge treatment and its further utilisation;
  - Deteriorate limit values of contamination intended for wastewaters discharge from the public sewer system, and affect qualitative objectives.
- The sewer connection serves for connecting house sewerage to the public sewer system or to cesspit/septic tank/house treatment plant.
- The sewer connection is a section of piping which collects wastewater from a plot or outfall place of house sewerage piping of a structure or building, up to the orifice of the sewer connection to the public sewer system. This orifice is part of the public sewer system. The sewer connection collects wastewater from a structure or real estate which is connected to the public sewer system.
- The sewer connection design shall comply with the provisions of a relevant regulation and EN 752. Spatial arrangement shall comply with a relevant regulation.
- Basically every real estate must have a separate sewer connection, unless agreed upon otherwise with the public sewer system's operator. To the selection of a sewer connection material, the same principles apply as to water connections. Most commonly plastic pipes are used.
- The place where the sewer connection shall be connected or meters/inspection shaft located shall be determined by the public sewer system's operator. The connection may be connected to the sewer only through a branch piece or in another place determined by the operator. The PVC pipe orifice to concrete shafts must be made using a reducer (joining socket), it may not be concrete the PVC pipe directly into the shaft wall. Joining sockets provide watertight and hinged connection of the PVC pipe to the concrete shaft.
- The location of individual connections in terrain (in trenches), distances between them, their depth, adjustments in their laying and connecting shall comply with a relevant regulation and other specialised standards.
- The sewer connection shall run along the shortest possible route and in one section from the real estate to the public sewer system. Principles of crossing with other utility lines must be observed according to relevant regulations.

03/12/18

- Sewer piping must be laid in a safe distance from building foundations, in a non-freezing depth or protected against freezing with thermal insulation.
- Sewer connections generally are not water construction works. As water construction works they are considered only if they:
  - Serve for collecting wastewater from industrial and agricultural structures,
  - Serve for collecting wastewater from a complex or group of buildings, requiring a separate sewer system,
  - Serve for discharging wastewater requiring previous treatment to the public sewer system,
  - Are longer than 100 m and have inner diameter bigger than 20 cm.

2.1.12.2. House sewerage

House sewerage takes away wastewater from a structure and adjoining areas which are functionally connected to the structure (terraces, backyards, patios, etc.) up to the connection to the sewer connection. The house sewerage design shall comply with provisions of EN 12 056. Basic requirements are specified in EN 476, detailed technical requirements are specified in a relevant regulation. The storm sewer system shall be designed according to EN 12 056-3.

House sewerage must provide safe, reliable, economical, and hygienically harmless collection of wastewater from fixtures, inlets, and technological equipment through sewer connections to the public sewer system.

Unless it is contrary to valid legislation, the following may be generally stated:

- House sewerage consists of piping and sewer accessories. The piping is further divided to outfall, connecting piping, downpipes, ventilating piping, and downpipes. The whole piping must be made tight and economical, with the following minimal properties:
  - Ensuring safe performance of required tests (water-tightness tests),
  - Having smooth inner surface,
  - Resistant to permanent and temporary action of wastewater and external conditions,
  - Resistant to mechanical abrasion by sediments,
  - Durable for the whole lifetime.
- The system must be designed to ensure that statics and safety of buildings and structures will not be affected even at possible repairs of the system. House sewerage piping installed in places with increased thermal, chemical, or mechanical stress shall be adequately protected. If damping is expected, piping shall be insulated. Piping must not be divided or narrowed in the direction of the wastewater flow. Individual types of wastewater shall be collected separately. Shared piping may be used only for storm and sanitary wastewaters, and for storm and chemically clean industrial wastewaters.

l 03/12/18

- Providing house sewerage with U-traps is permitted only at the minimum room temperature 5 °C. In unheated rooms the U-trap shall be protected against frost effects. A shared U-trap may be installed for max. 6 sinks or urinals in one room.
- Maximum 2 connecting piping may be connected into one downpipe. Anchorage of the connecting piping shall be dealt with similarly as with downpipes.
- Plastic piping may be installed in supporting ceiling reinforced-concrete structures only if:
  - The piping has adequately long lifetime compared to the structure lifetime.
  - Welded joints are used.
  - Thermal expansion of the piping is dealt with using fixed points mounted in such distances that the piping will not get deformed. The distance must be less than 1 m. If no branches or bends are situated between the fixed points, the piping will be equipped with electric couplers.
  - The piping is covered with a sufficiently thick layer of concrete, min. 200 mm.
- Downpipe must run vertically along its whole length. Internal angles of bending must be bigger than 105 degrees. With a smaller angle, the inner diameter must be increased by one size. Transfer to a bigger diameter for horizontal piping must be made using a rest bend, installed in a way that prevents it from shifting.
- Downpipe must be mounted to the structure in min. 2 pints on each storey (with hooks or clamps). The maximum distance between these points is 2 m, or as specified by the manufacturer. A drain shoe shall be installed on downpipe in the bottom storey or in a lace of a direction change. These fittings may not be installed in places where possible impermissible and uncontrollable wastewater leakage could cause hygienic, material or other damages.
- Ventilating piping of house sewerage must not open into chimneys or ventilation openings, and must lead min. 300 mm above the roofing level. In exceptional cases, ventilation may be dealt with in a different way. Ventilating head shall be installed if blocking with fallen leaves is possible.
- Rainwater from roofs is collected to the sewer connection through a storm downpipes. Using roof debris traps on internal storm downpipes is prohibited.
- Downpipes shall be connected to the main piping through 45/60° branches. Cast iron piping laid under the floor must be provided with a min. 0.2 m thick overlay, stoneware and plastic pipes min. 0.3 m.
- The system must be designed to ensure that the building statics will not be affected even at possible repairs of the system. The system must be watertight, gastight, and ventilated.
- Integrated certified systems are recommended to be used due to ensuring good functionality and manufacturers' guarantee validity. Various systems of different manufacturers are not recommended to be used together.

03/12/18

2.1.12.3. Testing of house sewerage

The house sewerage shall be tested in the form of technical inspections and tests in compliance with the provisions of a relevant regulation.

Unless it is contrary to valid legislation, the following may be generally stated:

- Technical inspection and tests are carried out in parts or together.
- Until technical inspection and tests are carried out, the piping to be tested must be left accessible and cleaned (uncovered, without backfill, not bricklaid) and fully visible.
- Compactness of pipes and fittings, observation of specified laying or fixing method of piping, and sealing piping joints are checked during the technical inspection. The test is carried out after positive results of the inspection have been obtained.
- The downpipe water-tightness test is carried out with cold water containing no mechanical impurities. The minimum water testing overpressure is 3 kPa, maximum 30 kPa and depends on local conditions, the lowest positioned fixture, or the lowest positioned fitting.
- Prior to the water-tightness test commencement, all openings of the piping tested are temporarily sealed. The piping is filled with water so as approximate overpressure is reached, necessary for testing the given section.
- Between the filling and the test performance, at least two hours must pass for stoneware pipes, one hour for cast iron pipes, and half an hour for plastic and steel pipes.
- The piping is tested for visible water leakages. Wet surface of the piping is not regarded a defect. After filling –up the piping with water, water-tightness test is carried out, lasting 1 hour. After this time, decrease in water content in the section tested is determined. The test results are satisfactory if the decrease of water per 1 m2 of inner surface of the piping is not higher than 0.05 l.
- The gas-tightness test is carried out with a testing gas and overpressure of 0.4 kPa. The overpressure and its decrease are measured with a manometer. The test results are satisfactory if the air overpressure does not drop below 0.2 kPa within 15 minutes.
- The water-tightness test of connecting piping is carried out with flowing 5 l water poured into the piping. The test results are satisfactory if no visible water leakage from the piping occurs.

2.1.13. Piping systems and utility lines outside buildings

All piping systems used within the construction must comply with the requirements of the Main design. Piping material, sealing, and laying shall be executed according to relevant regulations, or EN standards valid for the piping types used.

Prior to hand-over, the Contractor shall clean all piping, perform appropriate pressure tests approved by Engineer in pressure piping, and rinse and disinfect water supply piping.

03/12/18

2.1.13.1. Pipe laying

Piping shall be laid, bedding prepared, and backfills performed in compliance with appropriate regulations, EN standards, manufacturer's instructions, and with approved work safety plan for the construction site.

Unless it is contrary to valid legislation, the following may be generally stated:

- Piping shall be laid in sheeted trenches. In places with groundwater occurrence, a gravel sand or gravel layer and drainage shall be laid on the trench bottom. During pipe laying, trench draining must be provided, including draining of sewage waters.
- If a machinery-made trench cannot be excavated to an exact depth, the trench bottom must be finished of stabilised to the required gradient and shape manually before pipe laying. In places with socket joints, inspection pits shall be made. These pits shall be made only within the scope necessary to ensure the required joint sealing. The pits below the pipe sockets must be filled according to the laying method either with the bedding material or with backfilling material, compacted to a degree specified in the design documentation.
- The trench bottom shall be secured, according to geological conditions, as soon after excavation is made as possible, in compliance with the design documentation, to protect the ground material on the trench bottom from deteriorating due to climatic actions. Should the soil on the trench bottom be deteriorated due to exceptional climatic actions, the deteriorated soil must be removed and replaced with a bedding of sand or another suitable material according to the type of bedrock which shall be compacted to relative density of 0.8 or higher.
- Transport of material from a temporary dumping site within the construction site to the place of laying must be carried out with machines suitable for handling pipes.
- Piping, fittings, and valves must be cleaned, checked, and intact before laid to place.
- The piping used shall placed in compliance with regulations and instruction of individual manufacturers of piping material used, and with particular conditions. Backfilling and filling shall be performed over the whole trench width with suitable materials and must be evenly compacted on both sides of the piping.
- The permissible bending angle of piping depends on the selected piping material and must not exceed values permitted by relevant regulations, or EN, and the pipe manufacturer.
- The maximum angular deviation in a socket joint of the piping depends on the material selected and must not exceed values permitted by relevant regulations, or EN, and the pipe manufacturer.
- For pressure piping, a protective warning foil in a colour corresponding to the particular piping type shall be always laid into the backfill. An identifying strip CYKY 2x4 mm2, enabling later location of the piping, shall be mounted to all pipes excluding steel ones, and taken into shafts and valve lids. Except this strip, also identification markers shall

03/12/18

be laid above horizontal pipes, each 100 m in rural areas and each 50 m in urban areas.

- Ideal pipe laying, pipe bedding and backfilling adjustment, and pipe protection under roads shall be agreed upon individually for each piping type.
- The Contractor shall take into account local conditions on the construction site and quality of piping used when laying the piping compared to the proposed ideal method.

2.1.13.2. Concrete encasement of piping

The scope of sections with full or partial concrete encasement depends on the surface loading.

2.1.13.3. Adjustments around piping

For glass-reinforced plastic, stoneware, concrete, PP, PVC, PE, TLT and steel pipes, the bed and backfills must be performed consistently according to manufacturers' instructions and relevant directions for use. The grain-size of backfilling and filling materials must also comply with requirements of pipe manufacturers. Only materials, which will certainly not damage the piping and its protective layers, shall be used for backfilling.

The external piping protection must be checked before backfilling and trench filling is performed.

If sheeting is used, backfilling and filling with compaction shall be executed with the sheeting being gradually removed, i.e. backfills shall be compacted against natural ground of the trench.

2.1.13.4. Anchorage supporting blocks

For pressure piping, concrete anchorage blocks shall be constructed in places of bends, branches, and termination, securing the piping against shifting due to pressure, as specified by the piping manufacturers. Piping must be anchored also when laid in slopes – the slope gradient at which the piping must be anchored is specified in relevant regulations and directions of manufacturers of individual pipe types.

In places where such concrete blocks may not be used due to limited space conditions or insufficient soil bearing capacity, they may be replaced with interlocking couplings secured against shifting in compliance with manufacturer's instructions and directions.

The anchorage blocks must be placed before the pressure test is performed.

2.1.13.5. Pipe joining

Piping shall be joined according to the pipes manufacturer's instructions, connecting elements corresponding to the joint types and technological regulations for the appropriate pipe material assembly shall be used.

PVC, PP, concrete, and TLT pipes shall be joined through sockets using rubber rings. For piping laid in protection pipes the Contractor must use interlocking couplings secured against shifting. If pressure piping is used under water courses, it must be joined with interlocking couplings secured against shifting.

03/12/18

Glass-reinforced plastic pipes shall be joined with couplings on rubber rings.

Stoneware pipes shall be joined through sockets with integrated polyurethane sealing.

Steel pipes shall be welded or connected through flange joints.

PE 100 pipes shall be butt joined, street piping with electrocast couplings and fittings. Both materials joined must have the same physical characteristics. The joints must have at least the same parameters as the pipes. In places of PE pipes changing to flange-ending pipes, a seam ring and free loose flange shall be used.

The surface of joints must be kept completely clean before and during joining.

When work is interrupted, all openings must be closed with plugs, covers or blind flanges.

2.1.13.6. Flanged joints

Flanges, sealing, joining materials used, and the joining procedure must comply with EN 1092, EN 1514, EN 1515 and with other relevant valid regulations.

All bolts and washers of flanged joints shall be made of stainless steel, nuts of brass.

All bolts, washers, and nuts of flanged joints inside structures shall be made of stainless steel.

2.1.13.7. Protection against corrosion, coatings

All pipes and fittings must be supplied with paints and coatings applied in the production plants. Inner and outer paints must comply with relevant regulations, must adhere and must not peel off. Inner coatings must not contain water soluble components or admixtures which could cause any change in water quality following a reasonable pipe rinsing.

Materials coming to contact with potable water must not contain any toxic components, must comply with relevant regulations, EN standards, legislative regulations, and must have valid certificates proving their suitability for the contact with potable water.

Protection against corrosion must comply with relevant regulations.

Pipes and fittings must be supplied to the construction site with sufficient amounts of materials enabling protective systems of welded joints to be finished on the site.

In places where required by a relevant regulation, galvanic protection against corrosion shall be applied.

Pipes and fittings must be thoroughly cleaned before their assembly, and their protection shall be applied in compliance with valid regulations.

2.1.13.8. Pipe cutting

Pipes shall be cut in compliance with manufacturer's instructions, with preventing any damage of their surface protection and providing their perfect joining.

Pipes which will be cut short during the construction, must have smooth cut perpendicular to their axis. Ends of cut-short pipes must be adjusted to a shape required for piping material assembly before they are used.

03/12/18

2.1.13.9. Sewer connection

Unless it is contrary to valid legislation, the following may be generally stated:

- Newly constructed sewers shall be connected in connecting shafts. Connections with smaller inner diameters up to DN 200 mm may be connected to the main sewer with fittings.
- Other sewers shall be connected to existing or newly constructed shafts. Connections with smaller inner diameters up to DN 200 mm may be connected directly to existing sewers into milled openings fitted with special sealing. The connection must be watertight so that the formal function of the sewer is not disrupted. Connection to an existing sewer system may be performed only with the system operator's approval.

2.1.13.10. Piping permissible tolerance

The permissible piping direction and height tolerance is specified in relevant regulations and depends on the piping vertical alignment and size.

2.1.13.11. Unused existing piping

Existing piping which will cease to be functional after the construction of new sewers, shall be:

- Demolished, including shafts, in places where its will be replaced with new piping in the same route. Its material shall be disposed of to a controlled landfill.
- Filled up with poor concrete or ash-cement suspension in places where it is situated outside the new piping trenches.

2.1.13.12. Parallel piping

All the above-mentions provisions apply to two piping lines running in parallel. Joint excavation works and assembly of both lines in a single trench are expected. This includes shared trench sheeting and draining, if necessary.

2.1.14. Ductile iron piping

2.1.14.1. General

Ductile iron piping for gravity applications must comply with EN 476 standard which specifies general requirements on components of gravity piping systems and sewers. Nominal inner diameters must comply with relevant regulations. All cast iron pipes, flanges, and other components of sewer systems must comply with EN 598 and ISO 2531.

All cast iron pipes, fittings, valves, and other components of water supply systems must comply with EN 545 and ISO 2531. Inner and outer surfaces protection of the piping must comply with EN 545. Nominal inner diameters must comply with relevant regulations.

2.1.14.2. Material production and quality

Ductile iron, also known as nodular cast iron, nodular-graphite cast iron, is characterised by the content of nodular graphite in resulting cast pieces. Compared to flake-graphite cast iron

ℓ 03/12/18

it has higher tensile strength, high yield limit, and high ductility. An internationally accepted value for ductile iron density is 7,050 kg/m2.

Ductile cast iron pipes must be produced by one of the following procedures:

- Centrifugal casting to metal moulds with or without lining,
- Centrifugal casting to sand moulds,
- Casting to sand moulds,
- Casting to metal moulds.

Ductile cast iron fittings and accessories must be produced by one of the following procedures:

- Casting to sand moulds,
- Casting to metal moulds.

Pipes, fittings, and accessories must be fitted with fixed or loose flanges.

Pipes and fittings may be supplied with various joint types. Pipes and fittings with socket joints sealed with elastomeric sealing rings and flanged fittings are recommended to be used.

Pipes and fittings must comply with relevant regulations and must pass all specified tests. Pipes, fittings, and accessories must not have any defects preventing their correct use.

In order to ensure changeability of supplies from various sources, plus tolerances of plain end outer diameter of pipes and fittings, if measured peripherally in the place of joining, shall not exceed 1 mm.

2.1.14.3. Protective coatings

All pipes and fittings must be supplied with coatings/paints applied in the production plants. Inner and outer paints must comply with provisions of a relevant regulation, must dry quickly and adhere, and must not peel off. Inner coatings must not contain water soluble components or admixtures which could give water any off-flavour or odour following a reasonable pipe rinsing. Inner coating of piping supplying potable water or edible liquids must not contain any toxic components.

Protection against corrosion must comply with relevant regulations.

2.1.15. Steel piping

2.1.15.1. General

Steel piping for gravity applications must comply with EN 476 standard which specifies general requirements on components of gravity piping systems and sewers. Nominal inner diameters must comply with relevant regulations.

All pipes and fittings within WWTP's, in reservoirs and pumping stations shall be made of stainless steel.

Steel pipes shall be joined by welding or through flanged joints.

03/12/18

2.1.15.2. Material production and quality

Pipes and fittings must comply with relevant regulations and must pass all specified tests.

Steel pipes and fittings must be manufactured in the production plant. Oblong and spiral shapes must be made by automatic submerged arc welding, except pipes with small inner diameters.

Protective coatings

All pipes and fittings must be supplied with coatings applied in the production plants. Inner and outer coatings must comply with provisions of a relevant regulation

2.1.15.3. Welding

Welding shall be performed according to provisions of relevant regulations and EN ISO 6520-1, EN ISO 6520-2, EN ISO 6947, EN ISO 9692-2, EN ISO 9692-3.

The Contractor shall submit a detailed description of the welding procedure complying with a relevant regulation. This procedure must contain all dimensions, combinations of materials to be joined, and all repair welds. The procedure shall be approved by Engineer.

All welding work must be executed by qualified welders and strictly in compliance with specified welding procedures.

2.1.15.4. Protection against corrosion

Inner and outer systems of corrosion protection must be applied in the production plants. Pipes and fittings must be supplied to the construction site with sufficient amounts of materials enabling protective systems of welded joints to be finished on the site.

Where required by a relevant regulation, galvanic protection against corrosion shall be applied.

2.1.16. Concrete and reinforced-concrete piping

2.1.16.1. General

Concrete and reinforced-concrete piping for gravity applications must comply with EN 476 standard which specifies general requirements on components of gravity piping systems and sewers. Nominal inner diameters must comply with relevant regulations. Pipes must be made of water-resistant reinforced-concrete according to a relevant regulation. Conditions for the use of concrete and reinforced-concrete pipes are specified in a relevant regulation.

2.1.16.2. Material production and quality

Unless specified otherwise, pipes must be made of water-resistant reinforced-concrete, fitted with socket joints with integrated sealing. Sealing rings must not affect the piping system and must not cause failures of testing sets. Material for sealing rings must comply with EN 681-1.

All concrete and reinforced-concrete pipes must be made from cement resistant to sulphates as specified in a relevant regulation.

All concrete and reinforced-concrete pipes must be transported, stored, handled, laid, and joined strictly in compliance with the manufacturer's instructions and recommendations.

03/12/18

2.1.17. Plastic piping

2.1.17.1. General

Plastic piping for gravity applications must comply with EN 476 standard which specifies general requirements on components of gravity piping systems and sewers, and with EN 13598-1 which specifies requirements on auxiliary accessories including inspection chambers. Nominal inner diameters must comply with relevant regulations.

2.1.17.2. PVC piping

PVC pipes and fittings for pressure-less usage must comply with EN 1401-1. PVC pipes and fittings of pressure systems (both water supply and sewer system) must comply with EN 1452-3. Pipes of min. PN 10 shall be used.

With the exception of flanges joints and where specified or approved by Engineer otherwise, the pipe joints must be flexible and sealed with rubber rings or sealing approved by Engineer, and must pass all specified tests.

The min. rigidity of all pipes and fittings must be SN 8 (8 kN /m2).

Sealing rings must not affect the piping system and must not cause failures of testing sets as specified in provisions of a relevant regulation. Material for sealing rings must comply with EN 681-1.

Adhesive must not have adverse effects on the properties of pipes and fittings, and must not cause leakage of the system.

Joining pressure PVC piping systems:

Pipes and fittings shall be joined through in-cut socket joints fitted with elastomeric sealing rings which are included in the delivery. With other piping systems they shall be connected through preassembled loose flanges made of ductile cast iron and elastomeric sealing rings of cast-iron flanged joints.

2.1.17.3. Polypropylene (PP) piping

Polypropylene pipes and fittings for pressure-less usage must comply with EN 1852-1. PP pipes and fittings of pressure systems must comply with relevant regulations. Pipes of min. PN 10 shall be used.

With the exception of flanges joints and where specified or approved by Engineer otherwise, the pipe joints must be flexible and sealed with rubber rings or sealing approved by Engineer, and must pass all specified tests.

The min. rigidity of all pipes and fittings must be SN 8 (8 kN /m2).

Sealing rings must not affect the piping system and must not cause failures of testing sets as specified in provisions of a relevant regulation. Material for sealing rings must comply with EN 681-1.

Adhesive must not have adverse effects on the properties of pipes and fittings, and must not cause leakage of the system.

03/12/18

Joining pressure PP piping systems:

Pipes and fittings shall be joined by thermal welding as specified in relevant regulations:

- butt welding,
- polyfusion welding.

2.1.17.4. Polyethylene (PE) piping

Pipes and fittings made of high-density polyethylene (HDPE) used for the construction of sewer systems must comply with EN 13244 (pressure applications), EN 12666 (pressure-less applications). Pipes of min. PN 10 shall be used for pressure applications.

The min. rigidity of all pipes and fittings must be SN 8 (8 kN /m2).

Joining pressure piping systems:

PE pipes and fittings shall be joined by thermal welding as specified in relevant regulations:

- butt welding,
- polyfusion welding,
- electrofusion welding

Pipes of smaller inner diameter may be joined also through mechanical fittings. PE pipes and fittings of pressure systems must not be joined with adhesives.

Pipes used for pressure supply of potable water must comply with requirements of EN 12201.

2.1.17.5. Glass-fibre reinforced plastic (GRP) piping

Pipes and fittings made of GRP must comply with provisions of a relevant regulation and of EN 14364. Pipes of min. PN 10 shall be used for pressure applications.

The min. annular rigidity of all pipes and fittings must be SN 5,000, or 10,000 according to the pipe laying depth and loading.

Pipes must have straight faces, smooth outer surface, and constant outer diameter along their whole length, enabling them to be cut and joined in any position along the whole length without any special preparation of the cut-off face, except resealing exposed fibres. Pipes shall be joined by methods and with materials specified by their manufacturer (generally with couplings on rubber rings).

2.1.17.6. Drain pipes

Plastic pipes complying with relevant regulations shall be used, with circular cross-section, enabling continual piping of required length to be formed. Pipes walls must be perforated. Smooth, flexible or coated flexible pipes are permitted to be used.

2.1.17.7. Material quality

All pipes and fittings must be transported, stored, handled, laid, and joined strictly in compliance with the manufacturer's instructions and recommendations to prevent any damages to the material and insulation of the pipes and fittings.

03/12/18

The storage method of material for horizontal piping on the construction site must prevent it from being damaged or contaminated inside.

Plastic pipes must be resistant to ultraviolet radiation.

The Contractor shall inform the manufacturers on climatic conditions on the worksite and apply for instructions for storing these materials on the site. After being approved by Engineer, these instructions must always be complied with.

2.1.18. Stoneware piping

2.1.18.1. General

Stoneware piping for gravity applications must comply with EN 476 which specifies general requirements on components of gravity piping systems and sewers. Nominal inner diameters must comply with relevant regulations.

2.1.18.2. Material quality

Pipes, fittings and joints of stoneware piping must comply with the requirements of EN 295-1.

Stoneware pipes shall be joined through sockets with integrated polyurethane sealing. Joints must pass tests specified in EN 295-3. Joint water-tightness must comply with the requirements of EN 295-3.

2.1.19. Pipe laying

2.1.19.1. Concrete and reinforced-concrete pipes

Unless it is contrary to valid legislation, the following may be generally stated:

- A 100 mm thick concrete layer shall be laid under the pipes. They must be laid on supporting concrete blocks of specified size. The remaining space below the blocks and along the pipes shall be filled up with concrete. Design of the concrete bed along the piping must ensure min. 120° supporting angle. Due to this the trench sheeting must be removed gradually.
- Dolomite sand must be used for backfilling the pipes. Pipe backfilling and material compacting must be performed by layers of max. thickness 150 mm until reaching the level of 300 mm above the piping. The backfilling material shall be specified in the Contractor's design documentation, or by the manufacturer. Generally, it should be 0-8 mm fraction.
- Backfilling in unpaved areas – screened material from excavations shall be used (if usable, otherwise gravel sand 0-63 mm). Unless specified otherwise in the excavation permit, the top filling layer (approx. 35-40 cm) of minor roads shall be made of crushed gravel up to the bottom level of the road structure. Excavated soil shall be deposited in a borrow pit and brought back for trench backfilling after piping has been laid and shafts constructed.
- Backfilling under major roads shall be made according to the road operator's requirements.

03/12/18

- Material for backfilling and filling (if excavated soil is not used) shall be certified and shall comply with relevant regulations.
- In case of groundwater occurrence, a 100 mm thick draining gravel layer shall be spread over the whole trench width. Pits shall be drained with drain piping DN 100-150 mm laid into a sand bed (max. grain size 65 mm) along one or both sides of the trench according to a hydraulic calculation of the trench draining. The calculations shall be made by the Contractor. When not required any more, the drainage shall be closed in a way specified in the Contractor's design documentation.
- Prior to the hand-over, the Contractor shall clean all piping.

2.1.19.2. Steel and cast iron pipes

Unless it is contrary to valid legislation, the following may be generally stated:

- Only a sand material of 0-22 mm grain size may be used for the bed and pipe backfilling. The minimum thickness of bed/sub-base is 10 cm, of backfill 30 cm above the piping crest.
- Backfilling in unpaved areas – screened material from excavations shall be used (if usable, otherwise gravel sand 0-63 mm). Unless specified otherwise in the excavation permit, the top filling layer (approx. 35-40 cm) of minor roads shall be made of crushed gravel up to the bottom level of the road structure. Excavated soil shall be deposited in a borrow pit and brought back for trench backfilling after piping has been laid and shafts constructed.
- Unless specified otherwise in the excavation permit, filling under major roads shall be made with crushed gravel of 0-63 mm along the whole length.
- Material for bedding, backfilling and filling (if excavated soil is not used) shall be certified and shall comply with relevant regulations.
- When work is interrupted, all openings must be closed with plugs, covers or blind flanges.
- Prior to the trench filling, outer protection of pipes must be checked.
- Pressure piping (together with all fittings and valves) must be tested with water in compliance with relevant regulations. The trench shall be filled before the test is carried out to prevent piping from moving, with joints exposed. Supporting blocks shall be installed before the test.
- In case of groundwater occurrence, a draining gravel layer 100 mm thick shall be spread over the whole trench width. Pits shall be drained with drain piping DN 100-150 mm laid into a sand bed (max. grain size 65 mm) along one or both sides of the trench according to a hydraulic calculation of the trench draining. The calculations shall be made by the Contractor. When not required any more, the drainage shall be closed in a way specified in the Contractor's design documentation.
- Prior to the hand-over, the Contractor shall clean all piping.

l 03/12/18 ff

2.1.19.3. PVC and PE pipes

Unless it is contrary to valid legislation, the following may be generally stated:

- Piping shall be laid on a sub-bed made of 0-22 mm aggregate, layer thickness 0.15 m, Id = 0.95. After the water-tightness test is executed, piping shall be backfilled with the same material, soil along the sides of piping and above it up 0.30 m above the pipe top shall be compacted with Id = 0.95. The trench bottom shall be levelled and stones removed before pipes are laid. The maximum thickness of compacted layers is 15 cm.
- Backfilling with compacted gravel sand up to 300 mm above the pipe top. Backfilling material grain size 0-22 mm. The maximum thickness of compacted layers is 15 cm (Id = 0.95).
- Filling from a suitable compactable material, laid in compacted layers with max. thickness of 200 mm, plain under the roadway according to the building permit, but min. 45 MPa.
- If piping is laid below the groundwater level, a layer of compacted macadam with min. thickness of 150 mm shall be laid on the foundation bottom, with drain pipes DN 100 discharging to pumping shafts or to the nearest water course, or to existing gullies. Above the compacted gravel layer, a separation geotextile of 300 g/m2 shall be laid, bent to the sides and reaching above the sub-bed material.

2.1.19.4. PP pipes

Piping must be laid in compliance with EN 1610. Individual pipes shall be laid on the sub-bed layer, with sockets turned always against the slope. The pipe body must lay on the sub-bed along its whole length. The sub-bed must be adjusted under sockets. Pipes must not be laid and joined at temperatures below 0 °C and above 25 °C.

Unless it is contrary to valid legislation, the following may be generally stated:

- Pipes shall be laid on a 0.15 mm thick sand sub-base, 0-22 mm, Id = 0.95. After the water-tightness test is executed, piping shall be backfilled with the same material, soil along the sides of piping and above it up 0.30 m above the pipe top shall be compacted with Id = 0.95. The trench bottom shall be levelled and stones removed before pipes are laid. The maximum thickness of compacted layers is 15 cm.
- Backfilling with compacted gravel sand up to 300 mm above the pipe top. Backfilling material grain size 0-22 mm. The maximum thickness of compacted layers is 15 cm (Id = 0.95).
- Filling from a suitable compactable material, laid in compacted layers with max. thickness of 200 mm, plain under the roadway according to the building permit, but min. 45 MPa.
- If piping is laid below the groundwater level, a layer of compacted macadam with min. thickness of 150 mm shall be laid on the foundation bottom, with drain pipes DN 100 discharging to pumping shafts or to the nearest water course, or to existing gullies.

02/12/18

Above the compacted gravel layer, a separation geotextile of 300 g/m2 shall be laid, bent to the sides and reaching above the sub-bed material.

2.1.19.5. GRP pipes

Unless it is contrary to valid legislation, the following may be generally stated:

- Pipes shall be laid on a levelled sub-bed layer, with small assembly hollows dug in places of joints of individual pipes, their length shall be 3x the coupling width, depth 200 mm, width for DN 150-700 shall be 200-500 mm and for DN 800 and bigger 0.7x DN. Along the whole length, except the assembly hollows, pipes must lay on the sub-bed layer. Corresponding joining materials must be used for the piping assembly, otherwise the system tightness may not be obtained.
- A sub-base, with thickness 100 mm + 0.1 DE of the piping, made of compacted sand with max. grain size not exceeding the pipe wall thickness, shall be laid on the foundation bottom. Max. grain size of the material used may be 20 mm. Its surface must be sloped according to the longitudinal profile gradient.
- For pipes SN 10,000 in their primary zone up to 0.25 DE of the pipe laid, backfilling shall be made of compacted concrete recycled material with max. grain size not exceeding the pipe wall thickness. Max. grain size may be 20 mm. Min. compaction grade Id = 0.95.
- Backfilling compacted in layers max. 150 mm. Fills directly above the pipes up to 30 cm must not be compacted!
- For pipes SN 5,000 in their primary zone up to 0.70 DE of the pipe laid, backfilling shall be made of compacted gravel sand with max. grain size not exceeding the pipe wall thickness. Max. grain size may be 15 mm. Min. compaction grade Id = 0.95.
- In the secondary zone of the piping up to 300 mm above the pipe top, compacted backfilling and filling from incoherent soil with max. grain size not exceeding the pipe wall thickness shall be made. Max. grain size may be 15 mm. Fills directly above the pipes up to 30 cm must not be compacted!
- Filling from a suitable compactable material, laid in compacted layers with max. thickness of 200 mm, plain under the roadway according to the building permit, but min. 45 MPa.

2.1.19.6. Stoneware pipes

Unless it is contrary to valid legislation, the following may be generally stated:

- A 100 mm thick sub-base from C12/15 concrete shall be laid on the foundation bottom. The concrete surface must be sloped according to the longitudinal profile. Concrete blocks shall be placed on the sub-base, one piece behind each pipe socket.
- In case of groundwater occurrence, a gravel sand layer of min. 100 mm thickness shall be laid on the foundation bottom, sloped towards the draining groove.
- Pipes shall be laid in compliance with EN 1610. On the bottom layer of the concrete saddle, concrete blocks shall be placed, on which individual pipes shall be laid, with

l 03/12/18

their sockets turned always against the slope. When making concrete encasement, it must be ensured that the concrete fills the space between the pipe and the block. The Contractor shall use a laser gradient meter for laying the pipes. After the gradient is checked and water-tightness test successful passed, piping shall be completely encased with C12/15 concrete up to the level 100 mm above its top.

2.1.20. Requirements on water supply system construction

The construction of new water supply systems shall be executed by the Contractor in compliance with relevant regulations, European standards and valid legislation.

Unless specified otherwise by particular conditions, new water supply systems shall be made of high-density polyethylene (HD PE 100).

Valves within the water supply system (gates, filters, water meters, regulation valves, air valves) shall be made of corrosion resistant materials. All valves made of ductile iron shall be provided with strong anti-corrosion protection as specified by valid legislation.

Piping and fittings located in reservoirs and pumping stations for potable water shall be made of stainless steel DIN 1.4301. Piping, fittings, valves, and other parts of the piping equipment in all pumping stations and reservoirs shall be of pressure class PN 10 to PN 20 as required by the system.

Piping and fittings located in valve chambers shall be made of ductile iron provided with strong anti-corrosion protection as specified by valid legislation. Fittings located in valve chambers shall have flanged joints PN 10 – PN 20 as required by the system.

Piping crossing with roads and water courses shall be laid in steel protection pipes.

2.1.20.1. Structures situated on the water supply system

Sludge shafts

For water piping dislodging, sludge valves shall be installed in the lowest points of the piping, in the form of monolithic reinforced-concrete shafts in the lowest bending points. Each shaft shall be fitted with a sectional gate which may be handled through an assembly hole. A DN 80 or DN 100 branch shall be installed on the piping, with a point for sampling pressure measuring, gate and desludging – waste piping.

Air chambers

For aeration/de-aeration of water mains, air chambers are designed in the highest points of the piping, in the form of monolithic reinforced-concrete shafts in the highest bending points. Each shaft shall be fitted with an automatic air valve for piping aeration and de-aeration. Covers on the air chambers shall be provided with venting heads.

Underground hydrant sets

For desludging new feed mains in urban areas, for piping aeration/de-aeration and fire water intake, underground hydrants made of ductile iron min. GGG 40 shall be used, with a double gate and street closing covers, and pre-closures with telescopic gate valve sets and street closing covers.

02/12/18

Gate valves

For opening/closing water piping, soft-sealing gates with telescopic gate valve sets and street closing covers shall be used. Hand-wheel gates shall be installed inside building structures.

Installation of closing, hydrant, and other valve covers

Covers shall be made of grey iron in compliance with EN 124, installed on a concrete or plastic bed plate supplied by the covers manufacturer. In unpaved areas and pavements, the area around the covers shall be paved with a single line of granite cobbles 100x100x100 mm, laid into a 100 mm thick concrete bed (class C12/15). The roadway structure and asphalt-concrete top layer of asphalt roads shall be made together with the cover.

The location of valves and covers shall be signalled by identification plates according to the system operator's requirements, installed on near building structures or on pillars.

Valve chambers

New valve chambers shall be found on a 100 mm thick concrete base layer (C12/15) and 100 thick gravel sand sub-base. Supporting structures (base plate, walls, ceiling, access shaft) shall be monolithic from C25/30 reinforced-concrete. The bottom shall be sloped towards a 500x500x200 mm pumping hooper.

The ceiling slab shall be fitted with soil moisture proofing – a crystal-proofing coating material for concrete structures. Inside surfaces (walls, ceiling, access shaft) shall be painted with a protective coating system - a crystal-proofing coating material for concrete structures.

The access shaft shall be 600x600 mm, with installed pocket steps. Below the pocket steps, PE-covered steel steps shall be installed.

The shaft shall be sheltered with a cast-iron lockable cover ø 600 mm or 600x600 mm fitted with rubber sealing (class A15, B125,, or D400). In unpaved areas the shaft cover shall reach 500 mm above the ground level, and the area it shall be paved with granite cobbles laid into a 100 mm thick sand bed.

2.1.21. Requirements on sewer systems construction

The sewerage shall be designed according to EN 752 and relevant regulations. Sewer shafts and structures shall be constructed in places of sewers connections, horizontal and vertical bends, along a straight route within max. specified distances, and in other cases required by relevant regulations. Structures (flush shafts, pumping stations and other) shall be located on the sewer system upon the technical design of the sewer system and operator's requirements. Shafts and structures shall be made of concrete (monolithic, pre-cast) or plastic. The shaft and structure constructions must be watertight. The shaft and structure locations, their construction, equipment, and other aspects are specified in relevant regulations. Piping connection to the shaft or structure walls must be watertight and made with joining sockets corresponding to the material used.

l 03/12/18

2.1.21.1. Sewer system structures

Entries to shafts and structures (location of steps or ladders) must be safe and must comply with relevant regulations.

Inspection and confluent shafts must be constructed on sewerage systems and sewer piping, located according to the requirements of relevant regulations in places where profile, material or gradient changes, and in places of confluence with other piping. The shafts shall be made of concrete or plastic.

Plain concrete and reinforced-concrete shafts must comply with specifications of EN 1917. The concrete shaft construction may pre-cast, combined (partly pre-cast and partly monolithic), or monolithic cast in situ, always watertight. They must be made of water-resistant concrete according to relevant regulations.

In places, where structures shall be located below the level of concrete aggressive groundwater, concrete constructions of these structures shall be adequately protected.

Sewer piping passages through structure walls shall be made with special passage and sealing materials incorporated in the construction, which shall ensure passage water-tightness. The passage-piece material shall correspond to the material of piping leading into the shaft. For pre-cast structures, these passage-pieces shall be incorporated into pre-cast sections during their production. Additional insertion of joining sockets is not permitted.

Shaft bodies shall be laid on pre-cast or monolithic bottoms. Individual rings shall be fitted with integrated sealing supplied by their manufacturers together with the rings.

Shafts with pre-cast bottoms shall be preferred. Shafts with monolithic bottoms shall be used in places where the design sewerage shall be connected to the existing sewerage, and in confined conditions where constructing a monolithic bottom is more economical.

Shaft cunettes shall be made in a way ensuring their resistance to the sewage impact.

Joints of pipes and shaft walls must be protected against damages during different settling of the constructions.

Shafts shall be covered with lids. Lids and frames used shall comply with EN 124. Cast iron lids with specific bearing capacity shall be used in roads, concrete or composite lids with specific bearing capacity shall be used outside roads.

In unpaved areas, shafts shall end above the ground.

If a shaft composition is not specified in detail, the price shall be considered to include a complete shaft.

<u>Wastewater pumping stations – structural part</u>

Pumping stations (PS's) in the sewerage system shall be located in places from which further gravity runoff is not possible. These include:

- Sewers along which the level line runs to unacceptable depths,
- Low-located catchment area of one or more sewers,

23/12/18

- Transport of wastewaters towards the WWTP.

If possible, PS's shall always be located within public plots outside communications. They may be located within communications only if there is no other space available. Traffic on such communications shall be restricted during repairs and replacement of pumps, or maintenance in the wet chamber of the PS.

Pumping stations shall be designed as completely underground structures made of reinforced-concrete monolithic or pre-cast watertight elements. They shall be constructed in construction pits secured with suitable sheeting. It will be the full responsibility of the Contractor to lower the groundwater level so that the PS's could be founded in dry conditions. The Contractor may choose a suitable method of the PS construction, since being fully responsible for the PS design and realisation, including the provision of work safety and health protection.

Removable covers are designed in the PS ceilings enabling the assembly and access. The covers and entries to PS's shall be designed according to relevant regulations.

Machinery equipment within PS's is included in the technological part. Each PS shall include one operational pump and one reserve pump, in exceptional cases more operational pumps. The PS operation is fully automatic depending on the level of water in the PS accumulation space; operation and breakdowns of pumps are signalled via remote transmission to the WWTP Danilovgrad control room.

Pumping stations within the sewerage system are divided to two categories:

PS of category 1 – wet chamber without backflow valves.

From each pump in the PS wet chamber, separate delivery leads to an inspection shaft down the lower located sewer section. Delivery piping is without valves and fittings.

PS of category 2 – wet chamber with backflow valves.

Wastewater runs through one delivery piping to a gravity section of another catchment area. The pump delivery includes backflow valves and valves with a surface box assembly. Behind the valves the piping joins into a common delivery.

<u>Switchboard for pumping stations – structural part</u>

Unless it is contrary to valid legislation, the following may be generally stated:

- A metering switchboard shall be made in the form of a white-brick pillar 600x1000 mm, 1950 mm high, standing inside a fenced-off PS complex or close to an unfenced-off PS.
- A technological switchboard shall be made in the form of a white-brick pillar 600x1800 mm, 1950 mm high, standing inside a fenced-off PS complex or close to an unfenced-off PS. This switchboard may be located also in a dry underground concrete shaft in the PS vicinity. Five pieces of plastic protection pipes DN 75 shall be laid between the switchboard and the PS.

03/12/18

- If compact PS's are supplied, both switchboards may be included in the technological delivery and located inside a PS type container.

2.1.22. Sanitary System

2.1.22.1. General

This work shall consist of supplying and installing sanitary equipment and fixtures, water pipes and drain pipes, and all internal plumbing.

The Contractor shall submit full details together with drawings of his proposals for approval of the Engineer before commencing the work and shall carry out all tests and inspection of the finished work as may be considered necessary by the Engineer.

The drawings shall cover the following:

* waste water pipes, form and routing, from the fittings to gullies and inspection chambers,

* soil pipes, form and routing, from the fittings to an external inspection chamber.

2.1.22.2. Materials and Workmanship

All materials and workmanship shall be of best quality and comply with the relevant standards approved by the Engineer.

2.1.22.3. Sanitary Equipment and Fixtures

All sanitary equipment and fixtures shall be of the standard quality. Wash basins, WC, pans, sinks, bath tubs, shower basins, taps, mixing batteries and other fixtures shall be of approved make and standard.

Samples shall be submitted to the Engineer for approval. Colour shall be submitted to the approval of the Engineer.

Wash basins

Wash basins shall be made of ceramic wall mounted, with approximate dimensions of 47*62 cm. Every basin shall have a mixing battery connected to the cold and hot main supplies and shall be fitted with a chromium plated siphon, complete grating, plug and chain. The siphon shall be connected to the nearest drain pipe by a 50 mm diameter cast iron or PVC pipe.

Every wash basin shall be provided with ceramic shelf, a mirror and a chromium plated towel rail.

European WC

European WC pans shall be glazed fire-clay. The flushing cistern shall be glazed fire-clay 12 liters capacity, connected to the main water supply system. A toilet paper holder and plastic seat with a cover shall be provided. Chrome finish ablution faucet spray wash unit with a 50 cm long hose, nozzle with hook, control slop and vacuum breaker shall be provided.

The pan shall be installed on floor with two screws with chrome cover head.

Urinals

03/12/18

Urinals shall be made of ceramic of the bowl type, wall hung with wall hanger, including bolts 60*6 cm. Each urinal shall have chrome finish flush valve with shut-off valve, approved vacuum breaker and chrome finish flush pipe 20 mm, 30 cm long. Urinal shall be provided with "S" trap with tubing drain to the outlet.

Shower basins

Shower basins shall be made of ceramic. The basins shall be fitted with a siphon with chromium plated grating and the siphon shall be connected to the floor trap by a pipe having a minimum diameter of 50 mm.

The basins shall comprise a mixing battery and shower and a single vitreous built-in soap holder, with the same specifications as provided for the bath tubs.

Sinks

White glazed fire-clay sinks shall be fixed to the wall by means of steel brackets. The sinks shall have drain boards made of 4 cm thick marble, fixed to the wall by steel brackets.

The sink shall be provided with a mixing battery connected to the hot and cold water supply and with a chain and plug.

Stainless steel sinks shall be of the double basin type of an approved make with stainless steel drain boards extending at both sides.

Each sink shall be complete with proper grating, plug and siphon connected to the nearest floor drain with a pipe having a minimum diameter of 50 mm, and shall be provided with a chromium mixing battery connected to the cold and hot water systems.

2.1.22.4. Waste water

Floor drains shall be connected to the drainage system by cast iron, PVC or vitrified clay pipes with the approval of the Engineer ; the Contractor shall provide and install the necessary and appropriate fittings and adapters to suit every particular case and shall perform all cutting in floor tiles and subsequent making good.

The waste water (wash hand basin, shower, sinks) shall be drained off by drain pipes connected separately to gully-traps; other drain pipes for closets (W.C.) and urinals shall be drained to pipes connected to manholes and then to the main drainage system.

2.1.22.5. Water distribution

Cold and hot water shall be supplied to the various sanitary fixtures in the buildings.

Pipes shall be cut accurately to dimensions established at the Site and shall be worked into place without springing or forcing. Pipes shall be installed as close as possible to walls, ceiling, columns... so as to occupy the minimum space. Piping shall be run parallel with the lines of the building unless otherwise justified. All embedded piping shall be installed true to line and grade. Proper allowance shall be made for expansion and contraction of pipes.

03/12/18

2.1.22.6. Installation of fixtures

All fixtures shall be installed with PVC gaskets and any such installation shall be completely watertight. All installations and fixtures shall be tested in the presence of the Engineer. In case any defect is found the defected fixture shall be replaced.

2.1.22.7. Pipes

Recommended pipe material for internal sewage system in buildings is PVC.

Cast iron pipes

Cast iron pipes for plumbing shall be according to Montenegro Standards; socket and spigot pipes shall be assembled with fittings of the same kind. Joints shall be made with oakum to 1/3 the depth of the socket and rests shall be well caulked.

Tests of pipes

All pipes either for water supply or drainage shall be tested. Water supply pipes shall be washed and sterilized before use.

Routes and coordination of services

The Contractor shall take whatsoever necessary steps to ensure that the installation of all services is properly coordinated.

Where different services share a route or an area, they shall be generally installed in a way not to interrupt any service.

The Contractor shall, at his own expense, make any alterations that may be found necessary due to change of routes.

Installation of pipe work

Pipe work shall be fixed to gradient to facilitate venting and draining.

Removable joints shall be provided on mains at maximum distances of 15 m.

Exposed pipe work shall present a neat and tidy appearance parallel to walls and floors.

The Contractor shall allow for the removal of any selected section of the installation for inspection by the Engineer. If the pipe work is found to be other than as described above, the removal and replacement as deemed necessary to satisfy these conditions shall be at the Contractor's expense.

Pipe sleeves shall be provided where pipes pass through the building structure. They shall be compatible with the material of the pipe passing through. Sleeves shall not be considered as pipe supports. The gap between the pipe wall and the sleeve shall be packed with non-combustible material.

No joints shall be permitted within the thickness of walls or floors.

All pipe work shall be marked with the approval of the Engineer for identification purposes.

Brackets and Supports for Pipe work

03/12/18

Adequate supports shall be provided to all pipe work and they shall be arranged to permit free movement due to expansion or contraction. They shall be located where possible at changes of direction and adjacent to valves or other items of equipment.

Where two or more pipes share a common support, the spacing of brackets shall be based on the centers required for the smaller diameter pipe.

Vertical pipes shall be supported at the base of the riser. The use of branches of the riser as a means of support shall not be permitted.

All brackets and clips shall be of a two-piece type, secured with bolts or screws and manufactured with the same material finish as the pipe they will support.

Steel pipe supports and brackets shall be made of stainless steel AISI 304.

Suspended pipe work shall be supported from fabricated steel bearers, fixed to the building structure with drop rods of the appropriate length. The drop rods shall be of the swivel type, where expansion is to be catered for.

Where polyethylene or PVC pipes are installed, the supports shall comply with the manufacturer's recommendations.

Inspection Chambers

Inspection chambers shall be built with reinforced concrete floors and walls and with a thickness of 20 cm. Internal faces shall be smooth. All faces from outside and inside shall be painted with waterproof anti-acid paint.

The inspection chambers shall be provided with double seal cast iron cover which shall be of heavy duty kind if inspection chamber is exposed to traffic.

2.1.23. Road works

2.1.23.1. Removing bituminous surfaces

If the works include removal of bituminous surfaces of existing communications for the purpose of excavating trenches or pits, the tenderer shall be considered to have included the price of cutting (or repeated cutting, if necessary) and removing of bitumen (in major roads by milling) and base layers of the roadway, vertical and horizontal transport of debris to a landfill as specified in valid legislation.

2.1.23.2. Earth works

Earth works must be executed in compliance with Chapter 2.1.6 "Earth works" of these specifications. The formation is determined by the project and a relevant regulation.

2.1.23.3. Road-bed surfacing and protection

After the road-bed is compacted to the required degree, its surface must be parallel with the finished roadway surface.

The finished road-bed surface must be approved by Engineer before base layers are laid. After final compaction and approval the road-bed must be protected and drained.

l 03/12/18

No materials or equipment may be stored on the finished surface. Without the Engineer's approval no vehicles may travel over the finished road-bed. At his own expenses, the Contractor must repair all insufficiently compacted or impaired parts of the road-bed.

2.1.23.4. Material and construction of base layers

Constructions shall be realised according to the project and relevant regulations.

Aggregate used in base layers must comply with the requirements of EN 13242. All material must be laid, evenly spread and compacted (spreading performed simultaneously with laying). This material must be lain in one or more layers so that the required base thickness is obtained. The base compaction must comply with a relevant regulation and must be made as soon as possible after the material has been spread.

The base must be maintained and drained during the construction to prevent the formation of a continuous layer on its surface. Water must be drained from the base to prevent its erosion.

2.1.23.5. Cover layers

Constructions shall be realised according to the project and relevant regulations.

Bituminous layers may be laid only on a dry base and in dry weather. Preparation, transport, laying, compacting, and curing of the surface must be executed in compliance with relevant regulations.

The works include reinstallation of horizontal traffic marking in sections affected by the construction.

2.1.23.6. Kerbs and pavements

Communications for pedestrians shall be realised according to the project and relevant regulations. Impaired pavements shall be repaired after the construction over the trench or pit width. Existing pavements shall be restored to their original conditions including all base layers.

2.1.23.7. Repairs of major roads

Unless specified otherwise in the building and excavation permits, structural layers of roads shall be repaired over the trench/pit width. Exact thickness shall be determined upon local conditions, requirements of relevant authorities, and specification in the Main design.

Principles and technological procedures of road repairs:

When situating sewers in communications, it is important to observe basic principles in order to prevent the occurrence of defects in roads due to infringements of the technological discipline. These principles shall be elaborated in the design documentation; the Contractor must observe, continuously monitor and evaluate them according to actual situation on the construction site. Engineer must permanently cooperate with the Contractor on the site, focusing on the work quality. The maximum homogeneity must be reached upon the construction termination, as the only guarantee of the minimisation of later deformations.

03/12/18

No work in roads may be started before a lawful permit issued by relevant road and transport authorities is obtained within the meaning of valid legislation.

When sewerage is constructed in a bituminous road, bonded layers shall be cut through and removed across the future excavation width. The trench excavation must be executed in compliance with relevant regulations and related legal and safety rules.

The basic aspect of the work quality in all alternatives is the execution of backfills of trenches up to the piping, which shall be executed in compliance with valid regulations. Backfilling shall be executed according to the Main design and technological procedure elaborated by the Contractor and approved by Engineer. An approved, compactable loose material (gravel sand, recycled material) shall be used, compacted in layers. The compacted soil moisture must not differ from the optimal moisture value. Thickness of layers laid shall be adjusted to the compacting machinery used, trench width, and material compactable qualities.

Backfilling must be performed along both sides of a structure simultaneously in order to prevent uneven pressures. When compacting is executed close to a structure or its parts, piping must be prevented from buckling or damaging, and insulation from damaging. Sheeting and other auxiliary equipment must be removed before backfilling is made.

Trench excavations shall be filled over their whole width after piping has been laid and relevant tests, approved by Engineer, performed. It is necessary to respect pipe manufacturer's technical conditions for pipe laying, and static assessment of the designed laying method, depending on loading and geological conditions.

Specified compaction grade must be observed within the whole thickness. The minimum deformation modulus value, determined by a relevant regulation, must be reached on the plain (the upper level of a mound). A technological procedure must be specified for the mound formation and the mound must be formed under an expert supervision. Relevant regulations shall be observed during the mound designing, forming, checking, and accepting.

During the backfill execution, regular tests specified in a relevant regulation must be performed continuously (i.e. on individual layers of the fill).

After backfills are made up to the plain level, the roadway structure shall be constructed. First the structure must be made in the trench. The basic principle is to build the structure in the same composition as the existing structure is, with individual layers bound to each other to ensure their co-action and functionality. Vertical connection to the existing structure cover must be properly sealed (joint sealers, torch-on strips). The final coating of the cover may be executed only after complete consolidation of the trench backfill.

2.1.23.8. Repairs of local roads

The repair of impaired local roads and pavements after the construction of sanitary sewers, branches for house connections, water supply mains, and other related structures and investments (re-laid utility lines) shall be executed over the trench width.

Prior to the earth works commencement, bitumen-concrete and concrete cover of roads shall be cut within the trench width and removed. In roads and pavements covered with road

l 03/12/18

panels, these shall be removed from the trench or pit space. The panels shall be used for later repairs. Impaired panels must be replaced with new ones by the Contractor.

After all works on sewer systems, water supply mains, and related structures are finished, structural layers of roads, including their covers, shall be repaired. Communications shall be restored to their original height level. Backfills, structural layers, and bitumen-concrete cover of local communications must be constructed according to principles and technological procedures described in the previous chapter.

Impaired pavements and other hard-surfaces as well as unpaved areas shall be restored to their original conditions.

Exact thickness shall be determined upon local conditions, requirements of relevant authorities, and specification in the Main design.

2.1.23.9. Tests of finished road layers

Acceptance tests of finished layers of structural elements of roads, pavements, and hard-surface areas shall comply with relevant regulations.

2.1.24. Fencing and landscaping

2.1.24.1. Fences and gates

Fences and gates shall comply with relevant regulations.

2.1.24.2. Landscaping

Where required, landscaping of the construction site must be performed after the Contractor has finished all other earth works except topsoil transfer. The areas in question must be levelled to the terrain level minus the layer thickness required for the topsoil or any other finish, and all excessive material must be removed from the site to an approved landfill.

Existing topsoil removed from the site and deposited nearby may be reused, provided it has not been contaminated and contains no building rubble and other impurities.

All unpaved areas shall be seeded with grass by the Contractor.

If there is not a sufficient quantity of topsoil from the site, the Contractor shall haul in a necessary quantity of humus at his own expenses. Prior to the landscaping commencement, its samples must be submitted to Engineer for approval.

The grass mix may be formed by various types proposed by the Contractor and approved by Engineer. Unless specified otherwise, all newly planted vegetation (bushes, trees) as well as seeded grass must be looked after (mowed) for one year.

2.1.25. Crossing with lines, roads, railways and water courses

2.1.25.1. Crossing railways

The construction must not endanger the railway transport continuity and safety. During the construction, the trackbed stability and drainage must not be endangered. Clear-sight conditions along the railway track shall be permanently maintained.

03/12/18

Construction within the perimeter of the railway and its protection zone may be executed only upon a design documentation verified in administrative proceedings and in compliance with valid regulations and railway regulations. Eventual changes in the construction may not be executed without a previous approval of an authorised body.

For crossing with a route of both local and long-distance railway cables, provisions of relevant regulations must be observed. Prior to the work commencement, exact marking-out of underground lines must be applied for. Excavation works within a specified radius from these line must be performed manually with the presence of a relevant person who shall evaluate the line conditions and observation of crossing conditions before the execute route is backfilled.

Relevant authorities shall join the final inspection proceedings after the construction is finished.

2.1.25.2. Crossing with major roads

In places where the designed piping crosses both intact lanes of a major road and where it is allowed by geological conditions, trenchless technology shall be used, e.g. push-broaching or micro-tunnelling.

Places of crossing with major roads shall be marked with boards installed next to the road bearing the sign "ATTENTION – NO EXCAVATION".

2.1.25.3. Crossing with local roads

Crossing with local roads shall be executed in compliance with issued permits. Unless it is question by a relevant permit, it is recommended to perform the crossing perpendicularly by digging in two stages in order to keep one lane functional at all times. Temporary finish of the road shall be made immediately after the piping is laid. The final finish of the road shall be made within one year. Composition according to the building permit. The location of the piping designed shall respect the requirements of relevant regulations.

2.1.25.4. Crossing with water courses

For crossing with water courses, the Contractor is obliged to minimise impacts on the stream beds and bank vegetation and execute the work in suitable times.

After the trench is backfilled, the river bed shall be restored to its original condition and stabilised. The following stabilisation of the river banks and bed shall be executed in compliance with the course operator's requirements. Excessive soil shall be taken to a temporary dumping site.

Places of crossing with water courses shall be marked with boards installed on the bank bearing the sign "ATTENTION – NO EXCAVATION".

Unless it is contrary to valid legislation, it may be generally stated that crossing with water courses shall be executed according to the river bed width in the following way:

- River bed width up to 5 m: The water course shall be dam up with dykes and water diverted by pumping around the dykes. Soil from trench excavations shall be used for the dykes.

l 03/12/18

- River bed width from 5 to 12~15 m: The water course shall be dam up with dykes and water diverted through the site in DN 500 steel pipe by pumping. The dykes shall be constructed with soil from trench excavations, and if necessary also from an intermediate dumping site.
- River bed width over 12~15 m: The construction shall be executed in two stages – in one half of the water course protected with dykes with water diverted to the other half. After piping is laid in the first half, the dykes shall be transferred and pipe laying performed in the other half of the water course. The dykes shall be constructed with soil from trench excavations, and if necessary also with suitable soil brought from an intermediate dumping site.

For crossing with water courses, the Contractor may use also other procedures or technologies (e.g. push-broaching), if approved in writing by Engineer. In such cases the Contractor must document the planned method of the work execution and submit it to Engineer and the course operator for approval. However, the method proposed by the Contractor may not lead to the increase of the tender price.

Laying pipes on a bridge structure

In places where laying delivery piping under the water course bed is not technically possible, the crossing shall be executed "in air", either by suspending the piping on an existing bridge structure (if approved by the bridge owner), or on a separate pipeline bridge. Delivery piping shall be insulated (or pre-insulated pipes shall be used), and an automatic air valve shall be installed in the highest point.

2.1.25.5. Crossing with gas lines

Special attention shall be paid to parallel running with and crossing gas lines. The following general principles apply:

- Protection and safety zones of the gas lines according to the minimum distance must be kept in compliance with relevant regulations.
- Designs for crossing with gas lines shall be executed in compliance with the provision of relevant regulations and verified by a relevant authority.
- The minimum distance of sewer and water supply piping from a gas line in place of crossing must comply with the relevant regulations.
- Existing gas facilities must be marked-out accurately before the construction commencement.
- Work within the gas facility protection zone, as specified in relevant regulations, may be executed by physical or legal persons only with the approval of the line operator in compliance with the operator's conditions specified and under the supervision of the operator's representative.
- During exposure, before backfilling and filling the route, a representative of the line operator must be invited to inspect the work execution. Results of these inspections

03/12/18

shall be recorded in the building log of a separate report on each crossing shall be elaborated.

- If insulation is damaged or a breakdown occurs, the Contractor is obliged to issue an order to a relevant operator's office, the breakdown may be repaired only by the operator's personnel.

2.1.25.6. Crossing with utility lines

Prior to staring any excavation works and their designing (if necessary), the Contractor shall contact all relevant statutory institutions, road operator, and other owners of individual facilities. The Contractor shall check the exact position of existing facilities which could affect the construction works or be affected by them.

In cases of crossing with utility lines the Contractor shall proceed according to the opinions and conditions of individual operators of these lines, submitted during the building permit proceedings (the duty of line identification, handing-over the lines before backfilling, and other relevant opinions). The Contractor shall seek also other lines which were not the subject of the design documentation due to insufficient documents submitted by operators.

The Contractor shall inform Engineer in advance on every re-laying of a facility required due to his needs or due to the proposed working procedure. At the same time, the Contractor shall observe all Engineer's requirements related to such re-laying. The Contractor shall be responsible for the realisation of his own measures necessary for re-laying or removing utility lines.

The Contractor shall keep records in drawings related to all lines and facilities collided with, and mark all differences concerning information provided by statutory institutions to the road operator. These records shall be submitted to Engineer.

Information on facilities provided by relevant institutions shall be available in common working hours. During the contract validity period, the Contractor shall be responsible for determining exact locations of individual notified facilities operated by relevant institutions, including utility lines and connections. Their location shall be determined upon consultations with relevant authorities, equipment for electromagnetic survey shall be used, and survey through dug boreholes shall be executed.

Special attention shall be paid to those facilities, utility lines and connections, that were notified but are not marked in relevant drawings of individual operators, such as pipe gates and immovable assets operated from facilities notified. The Contractor shall bear all expenses on the repair of facilities operated by relevant institutions, including utility lines and connections, damaged by him during the dug borehole execution or due to unsuccessful search for exact locations before construction work commencement. The Employer shall not be responsible for any delay or consequential expenses incurred by such damages.

It is assumed that all dug boreholes executed to check the location of existing utility lines, including those informed about by Engineer, shall be included in the tender price. Unless specified otherwise, the dug boreholes shall be executed manually. Further it is assumed that excavation work made complicated due to existing utility lines are included in the tender price, too.

03/12/18

The Contractor shall submit to Engineer detailed information on encounters with such facilities before commencing works.

The Contractor shall take all necessary measures for the compete protection of all facilities and provide all means and help to authorised representatives of relevant institutions for accessing his facilities.

All marking paints used for temporary marking of utility lines shall have a short lifetime, shall be lead-free, biodegradable, and specified as paints which shall disappear in normal operation within 10 weeks.

2.1.25.7. Crossing with forest paths

Pipe laying on forest-type plots requires special attention in terms of the piping protection against loading from heavy machinery. Piping laid on such plots requires protection against damage caused by heavy logging and transporting mechanisms utilised in logging.

The plots shall be re-cultivated and returned to their owners for further usage after the work termination.

2.1.26. Work and operations of temporary character

2.1.26.1. Emergency potable water supply for inhabitants

As specified in relevant regulations, if water supply is interrupted or limited, the operator is entitled to determine conditions of such interruption or limitation and is obliged to provide alternative supply of potable water to inhabitants or alternative wastewater collection, by a method agreed upon with the public water supply system owner within technical limits and local conditions or determined in the operational order of the public water supply system.

Interruptions of potable water supply from existing public water systems are expected during the construction of water supply and sewer systems.

The operator is obliged, as specified in relevant regulation, to inform consumers on the limitation or interruption of potable water supply from the public water systems, with the duration of such limitation or interruption. On this account, the Contractor is obliged, before every planned interruption, to inform the operator about this fact in writing.

Since the operator is obliged, as specified in relevant regulation, to remove the cause of water supply interruption or limitation without delay, and re-establish the water supply or wastewater collection without delay, the Contractor is obliged to execute all necessary works in the shortest period possible.

2.1.26.2. Temporary roads and diversions

The Contractor's execution includes restoring all structures, facilities, surfaces, areas (including access roads) affected by the construction to their original conditions. The Contractor shall include these works into his bid, together with expenses related to activities in protection zones of utility lines.

The Contractor shall prepare a methodical plan for temporary works executed during the construction. This will be especially important for the reconstruction and sealing of sewers

03/12/18

realised during normal operation of the sewer system. The plan shall be submitted to Engineer for approval.

If the work technology requires complete road closing, the Contractor shall execute the closing for the minimum period, in morning hours if possible, after obtaining approvals from Engineer and the road operator.

Should a complete closing for a period longer than approved by Engineer and road operator occur, the Contractor shall ensure a diversion of the closed communication. If the diversion leads over unpaved surfaces, the Contractor is obliged to adjust the route so that it could be used by passenger cars and vehicles for waste collection, ambulance and fire vehicles. Road panels shall be used for this purpose. For muddy terrain, the Contractor is obliged to provide a suitable sub-base (e.g. gravel sand) below the road panels.

All expenses related to expected diversions of any kind shall be included in the tender price.

One lane shall always be kept open for traffic in major roads, unless specified otherwise in the Employer's requirements. The minimum width of one lane is 2.75 m. If this minimum width of a single lane on an existing roadway structure is not ensured, the Contractor must, at this own expenses, widen the lane with the use of road panels.

Where one-way traffic is necessary, or where traffic is required to be directed from one side of the roadway to the other, the Contractor must provide an appropriate traffic control system incl. traffic lights. This traffic control system shall be submitted in the form of a traffic control plan to Engineer and relevant traffic authority for assessment and approval. The plan shall include detailed information on the length of the roadway section to be affected by the construction, and on the traffic control method during the work execution. No work may be commenced before a written approval of such system operation is obtained from the relevant traffic authority.

03/12/18

2.2. GENERAL REQUIREMENTS – MECHANICAL AND ELECTRICAL PART

2.2.1. Introduction

General specifications stated in this section comprise a part of the Contract for Work, requirements on contractor's design documents and on construction of the work. Employer's requirements on construction, machine & technological and electrotechnical works complement and specify general requirements. In the case that a measure is missing in Employer's requirements, measures listed in general requirements shall apply. In potential discrepancy of general requirement measures and Employer's requirement measures, measures stated in Employer's requirements shall apply.

2.2.2. General

The Contractor is responsible for the draft and complete designing of machines and machine and electrotechnical equipment of the construction. Machine & technological and electrotechnical works included in the Contract comprise elaboration of complete design documentation of all stages, preliminaries for working drawings (as required), manufacturing, factory testing, transportation to construction site, installation, individual and complex testing including testing operation of the whole work and its approval and acceptance.

It is Contractor's responsibility that the draft, manufacturing and functions of machine and electrotechnical equipment allows to achieve the required outlet parameters defined by permissions for water using and other parameters stated in technical specifications. All supplied equipment is to be new. The designed equipment must comply with standards of the remaining facilities, service agreements and Employer's spare parts otherwise the Employer is entitled to require change of the equipment type suggested by the contractor at the contractor's expense.

Main requirements on the equipment to be supplied are included in Employer's requirements and specifications of the tender documents. However, the contractor shall include in their price all additional and related auxiliary items required for effective implementation of the work regardless whether they are specified or not.

Machines and equipment shall be complete with electric motors and all accessories and shall be newly manufactured. They shall contain all shafts, couplings, bearings, covers, pipe valves, pressure gauges, cover plates and frames, anchor screws and bolts, oilers, grease nipples and lubricators, distribution boxes, control devices, as well as all apparatuses, accessories and connections comprising complete and perfect machine & technological and electrotechnical equipment.

Price of the items shall include delivery, assembly and testing up to the level of complete tests; the price shall further include procedures required to maintain water supplies in operation as e.g. temporal connection of the existing equipment. When connecting new equipment, the process must not be interrupted and should be done in minimum time even though the works were carried out in three-shift operation in order to minimize the downtime.

03/12/18

2.2.2.1. Standards

Generally

The design works and the Contractor's documents shall comply with the technical standards BS, BS:CP, and DIN, building, construction and environmental Laws applicable to the works, or defined by the applicable Decree No. 22/02 (Sl. List RCG) of Montenegro (Pravilnik o načinu izrade i sadržini tehničke dokumentacije).

If necessary equivalent National Standards may be substituted for the Standards referred to in the Specifications provided, the Contractor shall have justified such substitution to the Engineer and only after written approval has been received from the Engineer.

Electrical equipment

Used materials and the design of construction parts as well as the final supplied equipment shall comply with valid Montenegro standards, ENs and ISO or with specifications of CENELEC. The standard with the most strict requirements shall be the binding one.

Some types of products (e.g. modems) shall follow the regulations of the Agency for Electronic Communications and Postal Services – Montenegro.

All telecommunication works shall be carried out by personnel in possession of a valid licence issued by the relevant authority which permit the Contractor to carry out work on low voltage equipment and cabling.

All electric equipment shall be approved by relevant authorities.

2.2.2.2. Workmanship

Particular attention shall be paid to the design of mechanic and electric installations and their arrangement which shall be approved by Engineer before the installation commences.

All machines and mechanic and electric equipment and its final location within the buildings and structures shall be agreed with Engineer at construction site before installation.

The Contractor shall arrange for the switchboard and panel manufacturers to provide skilled labour for supervision of unloading, placing in prescribed positions on prepared foundations, erection and commissioning of all switchboards and control panels.

2.2.2.3. Selection of Materials

All machines, equipment and materials that shall be permanently incorporated in the work shall be new and of first class quality, of the latest type, not used before, shall have all design and material innovations, suitable for the duty concerned, they shall be free from imperfections and with guaranteed long life and minimum maintenance.

The use of dissimilar materials in contact shall be avoided. Where unavoidable, these materials shall be selected so that the natural potential difference between them does not exceed 250 millivolts. Electro-plating or other treatment of contact surfaces shall be employed as necessary to reduce the potential difference to the desired limit.

03/12/18

All materials and material finishes shall be selected for long life under the climatic conditions at the site. Materials used in ventilated or air-conditioned areas shall be selected to allow for the conditions expected in the case of failure of the ventilation or air-conditioning equipment.

Wherever possible tropical grade materials and switchboard panel components will be used.

Before the works commence, the contractor shall submit Engineer list of material sources for executed works. The list can be changed or completed in course of the works if approved by Engineer.

If a specific product is listed within this specification it shall only serve as an example and can be replaced by an equal one.

Outdoor equipment shall be able to resist climatic conditions and shall be constructed in such a way as to prevent water impounding in any point. Metal-to-metal connections shall not be allowed and all external bolts and screws shall be equipped by blank tapped holes if the through hole might allow moisture penetration. Where required, anti-climatic covers shall be provided to protect the equipment, devices and cables against weather conditions and direct sunlight.

Mechanics shall be constructed from materials that will not choke due to rust, corrosion or dust. Uncovered bearings of operational shafts shall be constructed as to prevent moisture and dust inward penetration along the shaft.

Before materials and equipment are incorporated to the work, the Contractor is obliged to submit certificates of all these materials and equipment to Engineer for approval before the planned commencement of works on the involved part of the work. For all materials that shall be in contact with potable water, the Contractor shall submit valid certificates proving that the materials can be in contact with potable water. The certificates shall be issued by accredited testing institution and shall be valid at the time of work implementation.

2.2.2.4. Conditions of the Environment

All machines, mechanical and electric equipment, cables and wiring shall be suitable to the proposed indoor environment or outdoor climatic conditions in accordance with relevant standards.

Construction parts shall be suitable for conditions common in reservoirs, pumping stations and metering shafts. It especially applies to resistance to corrosion of individual parts of the equipment that are in contact with water, sprinkling water, very humid air and other corrosive media.

The facilities may be exposed to snow and temperatures down to -20 °C during winter. That is why maximum resistance to climatic conditions shall be taken into account when selecting materials and types of structures for all outdoor facilities.

Especially when plastic material is used, strong emphasis shall be placed on their impact resistance also at low temperature. Facilities installed outdoors shall be designed with respect to increases in temperature, dilatation effects, tensions, resistance to UV-radiation caused by sun radiation etc. Maximum temperature for dimensioning shall respect maximum ambient temperature and the maximum temperature of the media.

03/12/18

2.2.2.5. Storing Machine and Electrotechnical Equipment on Construction Site

Engineer hall approve the dates of machine equipment delivery in collaboration with the Contractor not less than 2 weeks before the planned date of delivery to the construction site. The equipment shall be temporarily stored until the date of installation in a properly secured storage facility on the construction site.

In case of delay of construction work schedule without the delay of machine equipment delivery or in case of deteriorating state of machine equipment stored on the construction site, the contractor shall either:

1) appropriately pack all items of machine equipment as to allow storing of the machine equipment in an outdoor area within the construction site without any deterioration of its state, or

2) provide a store house within the construction site approved by Engineer and meeting the minimum requirements on the equipment protection:

- Electrotechnical equipment: roofed, slightly heated dust-proof area without dust and pests.
- Rotating machine equipment: roofed area.
- Pipes, valves, steel structures etc.: covered by tilt on open, hard surface.

Materials shall be stored as prescribed by manufacturers or appropriate regulations. Different kinds of materials shall be stored separately in order to avoid their substitution. Material that was deteriorated by unsuitable storing or treatment or whose expire date had passed may not be used in the construction and has to be removed at the Contractor's expense.

The Contractor shall ensure insurance and shall be fully and exclusively responsible for security of all delivered equipment stored on the construction site until the construction is completed.

The Contractor shall be responsible for inspection of all equipment before its storing and shall ensure that all damaged equipment is repaired before it is deposited in storage facilities.

The Contractor shall transport machine and electrotechnical equipment from the storage facility to the place of installation after receiving the instructions from Engineer and in compliance with approved schedule of works.

The Contractor shall be responsible for operation, safe maintenance and servicing of all equipment on the construction site during construction and up to the moment when the Acceptance Report is issued.

2.2.2.6. Tools and Lubricants

The Contractor shall deliver the Employer the following tools in lockers: three sets of steel spanners (one set of open-end spanners and one set of ring spanners to mount all nuts on the machine equipment) including the anchor bolts and connections and other tools of special nature needed for general maintenance, including three pressure grease dose for each type/class of lubricants.

03/12/18

The tools of special nature include one set of puller for all bearings and tools for mounting new bearings, three sets of screw drivers for all types of screws used on machine equipment as well as three sets of general tools.

The above sets of tools shall be approved by Engineer.

2.2.2.7. Spare Parts

The Contractor is obliged to supply spare parts for all equipments during the whole warranty period. All costs related to purchase, transport, storing and use of spare parts shall be included in the Tender Price.

At the end of the warranty period, the Contractor is obliged to hand over spare parts within the scope defined in the other parts of this Tender document to Employer.

The contractor is not obliged to supply spare parts for equipments after the warranty period expires, with the exception of parts comprising a part of standard delivery of machines and equipment.

2.2.2.8. Service Conditions

The offer shall include listed service conditions for the drafted machine equipment. All machine and electrotechnical equipment shall be designed, delivered and assembled with the proviso that under the service conditions faults can be detected and repaired within 48 hours at this equipment. If the above proviso is not proved for a specific type of equipment that the contractor wants to deliver, the Employer shall have the right to repudiate the service contract.

2.2.3. Electrotechnical equipment

2.2.3.1. Power Supply

Electric power distribution and related equipment in the distribution system shall be offered in appropriate dimensions corresponding with machines and equipment (according to their energy demands).

It shall be Contractor's duty to ensure the power required in course of the construction. The construction works shall be supplied by the same voltage as inscribed on the equipment identification plates.

Design of Power Supply System

Should the Contractor be responsible for the design or modification of power supply system, they shall observe the following general requirements.

The Contractor shall provide Engineer details of their proposals/modification for power system design and development and shall ensure all necessary leads and feeders in their plant to meet future requirements and maintain the existing operation during the transitional period.

The Contractor shall conform with specified design concept of the power distribution system and shall provide switchboards, transformers, panel boards and protection devices as required by the electrical capacity of the equipment.

03/12/18

The Contractor shall design the electrical power system to suit nominal ratings and load duties of the equipment and auxiliary systems they propose together with the following additional design criteria.

System Reliability

The distribution system shall be such as to provide maximum security of supplies and flexibility of operation. Power feeder circuits shall be duplicated throughout to all main machine equipment installations and shall be rated for maximum simultaneous load of all operation devices of the machine equipment with exception of those for which specified control systems otherwise limit their maximum circuit loads.

Interlocking shall be provided on all switchgear feeder circuits throughout the power system to avoid parallel operation of the duplicated permanent power supplies.

Automatic standby generator shall support all critical technological processes of the equipment in the event of voltage loss or failure of the main electrical power supply.

Maximum Work Loads

The Contractor shall submit their assessment of the total installed and the maximum work load based on the offered equipment during the design phase of the Contract.

Used Voltage Systems

Power distribution system shall operate at the following voltages:

Function	Voltage
LV Distribution	3 x 400V AC
Auxiliary equipment and services	400/230V AC
Control voltage	24V DC (PLC) in general, and 24V AC (for lamps in control cabinets)

Sub-distribution at LV shall be three phase, 50 Hz. The power system shall be rigidly earthed by HV/LV transformers.

Power Supply System and Machine Equipment Protection

The specification details minimum technical requirements on the voltage and machine equipment protection.

The Contractor shall design the power supply and equipment protection systems within the specified design parameters and shall select auxiliary protection transformer ratings, ratios and protection relays with adjustable settings and operating characteristics to provide:

- Overload protection to match thermal characteristics of the machine equipment.
- Effective protection against overload, short circuit, earth fault conditions and single phase operating conditions on motor circuits.
- Distinguishable operation between relays, high-performance fuses (HRC) and circuit breaker on progressive feeders and operation stable zoned and balanced current protection systems in the case of failure and switch shock.

03/12/18

The Contractor shall ensure that protection of power supply systems of water treatment plants, reservoirs, waste water treatment plant and pumping stations is fully co-ordinated with the Power Supply Authority (PSA) and shall establish all protections for the whole equipment required on the HV incoming feeder circuits.

In order to protect the system against damage or destroying by overload, appropriate safety measures shall be taken into account. The system must be implemented in compliance with electrotechnical regulations relevant to current protection at all objects. Sensitive devices (electronics, PLCs, PCs etc.) shall be protected by respective systems against excess current.

Measuring of Power Consumption

Electric meters measuring consumed kWh shall be installed on the incoming feeder circuits of all HV and LV switchboards, motor switchboards and within the power supply system.

The incoming power supply measuring facilities shall comprise dedicated current and voltage transformers with 240 V voltage on secondary circuits together with multifunctional electric meters measuring kWh, kVAh, kW, kVA and offering maximum demand functions and display units provided with output analogue and voltage-free digital signal devices for remote monitoring purposes.

Power Factor Correction

In order to comply with the local distribution company requirements, the power system shall be designed to operate at a minimum required demand power factor. Power factor correction shall comply with Employer's requirements and shall comprise power factor capacitors for power factor correction provided for each motor drive and for each inductive circuit, or central automatic correction control shall be installed.

The corrected power factor of the power supply system shall have the value of 0.95 at the point of power supply and in LV distribution switchboards.

The demand power factor shall be measured and identified at each distribution switchboard within the power system.

In LV distribution system power factor correction capacitors shall be incorporated within the respective motor control or distribution switchgear.

2.2.3.2. Polarity

Polarity of all specified electric devices shall be arranged as follows (when viewed from the front):

- For two pole equipments, the phase or live pole shall be atop (or on left hand side) and the neutral or grounded pole at the bottom (or on right hand side). On plug and socket outlets, the polarity shall conform the relevant Montenegro standards.
- For three or four pole equipments the phases shall be ordered L1, L2, L3 and neutral reading from top to bottom or from left to right in the case of vertical and horizontal layouts respectively.

03/12/18

- Phase colours and sequence shall conform the relevant Montenegro standards. All cable cores shall be identified with phase references.

2.2.3.3. Safety Interlocks

Complete system of electric and mechanical interlocks and safety devices shall be provided throughout the whole electric installation for safe and continuous operation of the equipment in order to ensure:

- Safety of personnel engaged in operation and maintenance of the equipment.
- Correct sequence of operation of the equipment during its start up and shut down.
- Safety of the equipment when operating under normal or emergency conditions.
- Interlocks shall be preventive, not corrective in operation.

The Contractor shall be responsible for preparing interlocking schemes for Engineer's approval.

2.2.3.4. Electric Motors

Unless otherwise stated in Employer's requirements, all motors shall be suitable for operation at 400 Volts, 3 phase, 50 Hz supply and shall comply with requirements of relevant standards.

Unless otherwise specified, motor frames for indoor use shall conform to protection not lower than IP54, motor frames for outdoor use shall conform to protection not lower than IP55.

Unless otherwise stated, motor frames for submersible pumps shall conform to a degree of protection not lower than IP68.

All motors except for submersible pumps shall be suitable for operation in climatic conditions of the site and in ambient temperature up to +40°C.

Motors at 40°C of ambient temperature shall be of the squirrel cage induction type suitable for direct–on–line starting while starting current shall not exceeding 6 times full load current unless specifically detailed in relevant standards as an alternative arrangement.

The efficiency and power factor of the motors shall be high over a wide range of load conditions and the motors shall be designed, manufactured and tested in accordance with relevant standards.

Motors shall be commercially silent in operation and run free from vibration. The rotors shall be balanced both statically and dynamically.

Arrangements shall be made with the manufacturer so that the Engineer may witness motor tests if so desired.

2.2.3.5. Frequency Converters

The converters unit shall provide variable voltage/frequency supply to pump sets and other regulated devices over the whole duty range. The converter itself shall be built into an enclosure that meets IP2X unless otherwise stated.

03/12/18

Size of aberration of the output wave from a pure sine curve shall enable any motor to be continuously operated to at 100% of its rated output when supplied by three-phase current at 400V.

Each frequency converter shall be fitted with an input filter (class A), DC choke (if not supplied with the drive) and output dU/dt filter. The printed circuit boards shall be varnished.

Display

Menu with alphanumeric text for programming and operational display of the converter shall be provided.

Display options

Nominal value (%), motor frequency (Hz), actual value (%), motor current (A), torque moment (%), motor power (kW), energy consumption (kWh), motor voltage (V), direct-current voltage (V), motor protection (%).

Storing the parameters

Storing all parameters of frequency converter during power supply failure for a period of min. 100 hours (e.g. by means of EPROM).

Minimum requirements

Upper and lower limitation of the number of revolutions, ramp functions.

Protective functions

Motor protection (possibility to connect thermistor motor protection), proof coil to avoid exceeding of the voltage higher than 800 V/s, resistant to short circuits and earthing, over-current protection, thermal protection of the frequency converter, over- and under-voltage control.

Switching-over at the output between the motor and the frequency converter shall be possible without limitation, with no danger to the frequency converter (if not stated otherwise).

2.2.3.6. Transformers

General

Power transformers 25 kVA and above for installation outdoors shall be oil immersed and naturally cooled. Unless otherwise specified, power transformers for installation indoors shall be of cast resin type. When oil filled transformers are used indoors, they shall only be installed at ground level.

Rated power

Transformers shall be sized for continuous operation at the maximum rating under the specified ambient conditions. Allowance shall be made for ideal load distribution and ideal (sine) flow of current and voltage for higher harmonics where non linear loads (i.e. converters) are connected.

03/12/18

Winding

Primary windings of all transformers shall be closed delta connected. Secondary windings of all transformers, except for special applications such as 12 pulse inverters, shall be star connected with the star/neutral point brought out to the low voltage terminal box. The transformer star/neutral terminal shall be capable of accepting cabling as specified in Employer's requirements. The start/neutral points of the secondary windings shall be solidly earthed.

Transformer cores

Transformer cores shall be manufactured from non-ageing, low loss and high permeability transformer iron complying with relevant standards. Lifting eyes or lugs shall be part of the delivery.

The core shall be earthed at one point only with well visible and readily removable connection which may be conveniently opened to check the core insulation.

2.2.3.7. Generators

General

This section of the specification covers generator sets regardless of the medium of power. Generators shall be designed for use as reserve generators.

Diesel Generators

Diesel generators shall fully comply with the relevant Montenegro standard. The backup power supply shall be mobile, fitted on a carriage homologated for public communications.

Speed

Main failure sets shall be designed to operate at 1500 RPM.

Outputs

Unless otherwise specified, the motor shall have continuous rated output, which – after allowing for alternator losses – shall be sufficient to run all site loads of the treatment plant. The motor shall be capable of running at 10% overload for a period of 1 hour in course of any 12 hours.

Batteries

Batteries shall be sealed lead-acid. Fully automatic battery charging system shall be provided. Battery monitoring system shall be provided to give early indication of pending failure of the battery system. Adequate ventilation shall be provided to prevent build up of explosive gases.

Bulk fuel tank

Bulk fuel tank(s) shall have the capacity sufficient for 3 days continuous operation on full load and shall not be smaller than 2000 litre. Bulk tanks shall be of welded steel construction.

03/12/18

Day fuel tank

The day tank shall have sufficient capacity to run the diesel generator set continuously, on full load, for 8 hours. Where a combined Day/Bulk tank is specified in Employer's requirements (i.e. for small generators), the capacity shall not be smaller than 2000 litres. Day tanks shall be of welded steel construction.

2.2.3.8. Noise Reduction

Noise levels must fulfil requirements of relevant standards and valid Montenegro legislation. Where required by Employer's requirements, noise level site surveys shall be undertaken.

2.2.3.9. Inductive Flow Meters

Inductive flow meters shall be supplied in compliance with corresponding measures of respective standards and shall be provided with respective certificates and calibration reports. Water gauges shall comply with valid legislation and be verified by authorised measuring group (proved by respective report).

Supplied magnetic inductive flow meters shall contain control unit with LCD display, rubber lining, stainless steel electrode, connecting cable of required length (from the flow meter to switchboard (an evaluation unit), at least IP 67, power supply 24V, output 4-20mA, 2x 0/1, defined gauge.

2.2.3.10. Switching Devices

Switching devices and pushbuttons shall be in accordance with requirements of the relevant standards.

Main Switches

The main switch or switches of each installation shall be marked as such and shall be identifiable from other switch elements by grouping, colouring or other suitable means, such as to render it (or them) easily located in an emergency. When there is more than one main switch in a building, each shall be marked to indicate which installation or section of the installation it controls.

In a cubicle main switchboard, the main controlling switch (or switches) shall be located in their own section, completely segregated from all other parts of the switchboard with front access.

All main switches on all main switchboards (of cubicle or other type) shall be located as to maintain minimum distance defined in the relevant STN from the finished floor level to the bottom of the switch or connection straps, whichever of them is lower.

Auxiliary Switches

Auxiliary switches for indication, protection and interlocking purposes shall be readily accessible and enclosed by a transparent dust proof cover.

Adequate secondary disconnection shall be included between the fixed portion of a circuit breaker and the moving portion.

03/12/18

Spare auxiliary contacts, one normally open and one normally closed, shall be provided on each switching device.

2.2.3.11. Low Voltage Circuit Breakers

Air circuit breakers shall be rated for controlling loads for maximum circuit operation at 400V, 3 phases and 50 Hz under the specified climatic conditions of the site.

All low voltage circuit breakers shall be housed in control boards, which comply with Employer's requirements and shall not reduce the degree of protection to less than IP54.

Rated current specified in these sections shall be the same as for the circuit-breaker mounted within a switchboard. The service short circuit breaking capacity shall not be less than the maximum power system fault level.

2.2.3.12. Indicators and Meters

All indicating instruments and meters shall comply with relevant standards and shall be of industrial grade accuracy. They shall be suitable for the proposed environment, and be sealed against the ingress of moisture and dirt. They shall be supplied by digital display.

2.2.3.13. Motor Starters

Motor starters shall be of combined type in accordance with relevant standards.

Each motor starter shall be rated as to carry the full load current of its rated duty at its most severe load conditions.

2.2.3.14. Labelling

Labelling of all panels, high and low voltage components and cables shall be in accordance with requirements of relevant standards.

2.2.3.15. Switchboards and Control Panels

General

All motor control switchboards shall be indoor pattern located within the respective plant buildings.

The motor control switchboards shall incorporate motor starter and distribution feeder circuits generally in accordance with Employer's requirements.

The equipment shall be designed for operation from the front, except where necessary for the insulation of voltage transformers where rear access is required. LV and HV compartments shall be completely segregated.

Materials

Enclosures shall be constructed of folded and welded sheet steel.

Suitably insulated busbars and ground bars shall be of high-conductivity, hard drawn copper, and all other main current carrying components shall be of solid copper.

03/12/18

Ground Connection

Each switchboard shall be equipped with a suitably rated ground bar along its full length with provision for bonding to site cables, and a main ground terminal. Ring main units shall be equipped with a main ground terminal and provision for bonding to site cables. The integral grounding system for each unit shall be solidly connected to the ground bar or terminal. Bolted connections shall be tinned.

Power Supply Circuits

Power supply circuits shall comprise load break switch disconnectors each equipped with indicating instrumentation. Duplicated power supply circuits shall be key interlocked to maintain non-parallel operation of power supply sources.

LV Switchboards and Motor Control Centres

Main switchboards must not be located in motor rooms.

Mains monitoring relays shall be located in the LV switchboard. A test switch shall be provided to break one phase of the supply to the mains monitoring relay to simulate mains failure.

Change-over from mains supply to generator supply shall be by means of a purpose designed change-over system which must fully comply with all requirements of the power supply authority (distribution company).

LV motor starters shall be arranged for direct-on-line starting and single speed drive operation unless otherwise specified or for the limiting the system volts drop of particular plant operation, proposed by the Employer.

All motor starters shall be equipped with basic protection, control, indicating instrumentation and auxiliary circuit equipment in accordance with relevant standards.

Starters controlling common or associated function of the equipment shall be grouped within the switchboards to provide logical circuit arrangements. Common control plant shall be mounted in segregated control switchboard compartments and, as far as is practical, shall be located adjacent to the respective motor starters, or starter groups.

The control switchboards and individual starters shall also provide outgoing volt free status and analogue signals for power system and plant monitoring purposes. They shall have the following voltage-free change-over contacts for connection to the "supervisory control and data acquisition (SCADA)" system:

- signal RUN/STOPPED;
- signal FAILED;
- signal selected to OFF;
- signal selected to LOCAL;
- signal selected to AVAILABLE AUTO

03/12/18

On each starter, panel for starters greater than 1kW each mode of failure provided, i.e. overload, overheating, etc. shall be individually annunciated in addition to the common FAILED indication. For all modes of failure provided Fault reset shall be achieved by the operation of a front panel mounted push-button switch.

Local Switchboards

All conductive parts must be safely covered against touching (according to valid standards). The panel should include all components of one machine equipment or group of equipment.

Unless otherwise stated in the respective items of detailed design, switchboards that are placed in closed dry rooms (e.g. collectors, machinery-rooms or pump stations etc.) shall be made of coated sheet steel panels, switchboards placed outdoors shall be of stainless steel quality.

Switchboards have to include all necessary assemblies and materials such as enclosure, door locks, sealing, terminals, gland and mounting plates, bus-bars, mouldings, PG screw connections (always IP 65 design) resistant to UV- radiation, mounting material, keys, sets for wall mounting and stands made of stainless steel. Each switchboard must be equipped with labels, whose shape, material, colour and description will be determined by the Employer. Switchboard doors shut off with a door lock.

Outdoor Switchboards

The following minimum requirements shall be met:

- Protection category: min. IP 55
- Stainless steel
- Single enclosure, air-conditioned (heat exchanger), or design of box-in-box; the inside box must be heated and the interspace must be ventilated with the possibility of regulating the temperature.
- With a rain canopy made of stainless steel.

Fixing shall be provided by means of a stand made of stainless steel with base flange plate, assembly box plate and supports for cable guiding. The front side (with flow schemes, push buttons, switches, lamps etc.) according to separate specifications shall be covered by another door.

Switchboards in Closed Room

The following minimum requirements shall be met:

- Protection category: min IP 54
- Coated sheet steel
- Self-extinguishing according to the relevant standard
- Wall or floor mounting.

03/12/18

2.2.4. Cabling and earthing

This chapter covers the supply and installation of the necessary new cabling and earthing systems and the removal of redundant cabling, earthing systems and electrical equipment.

2.2.4.1. General Cabling

The Contractor shall supply, install, terminate, test, commission and identify all supply, operation, control, protection and instrumentation cabling systems necessary for operation of equipments, electric power distribution systems, monitoring, measuring and regulation systems and building/site installations supplied under the Contract.

The cabling installations shall fully comply with requirements of relevant Montenegro standards.

The Contractor shall prepare implementation documents with regard to detailed schematic and block diagrams, together with schedules of all cables and conductors proposed to install for power, control and instrumentation systems. The schedules shall include the following information:

- Type of cable/conductor
- Size of cable/conductor
- Number of cores used and spare
- Voltage grade
- Maximum circuit full load current for power cables
- Cable/conductor identification reference
- Cable/conductor route data

In the case that any of the mentioned items is missing from the implementation documents, the Contractor shall amend the design and provide it for approval to Engineer. No works shall start without written approval of Engineer.

Types of Cables and Conductors

Types of cable/conductor shall fully satisfy requirements of relevant standards.

Cable and Conductor Sizes

Core sizes shall be determined in line with relevant standards.

The Contractor shall rate and select power and control cabling to suit the final approved power circuit loading and equipment ratings together with the specified protection, control and monitoring systems. The Contractor shall replace any cable approved and or installed and subsequently found to be inadequate.

Short time fault current ratings of all power cables shall match the maximum fault ratings of the associated switchgears and protection systems.

With the exception of special cables for analogue signal and measuring circuits, the minimum core size for auxiliary power and control cables shall be 1.5mm^2.

03/12/18

All multicore cables provided for the equipment protection, control and monitoring systems shall incorporate 2-3 spare cores. All spare cores shall be identified and marked.

At existing operation devices with measuring and monitoring equipment designed also for other purposes the multicore cables provided under this Contract shall have sufficient cores (and spares) for complete future works installation.

Cable and Conductor Segregation

Power systems operate at different voltages and control, protection and installation circuits for separate units or plants shall be run in separate cables. For internal cable installations prescribed spacing shall be maintained between all power cables in accordance with relevant standard.

Analogue and DC control signals shall not be run in the same cable. The minimum distance between analogue and DC control cables and all other cable systems shall be in accordance with relevant standards.

Cabling Inside Buildings

Cable installations inside buildings shall be run in plastic conduits or strips, galvanized cable trenches and galvanized cable trays, or installed on or suspended from structural walls or ceilings of the building.

In all parts effected by waste water effluent or chemicals creating a chemically corrosive condition, cable tray systems shall be of corrosion resistant materials or stainless steel.

External Cabling

External cabling shall be executed with respect to the requirement on cable systems segregation. Separation between cable systems and all other underground services shall be in accordance with relevant standards.

Where the Contractor wishes to directly bury the cables in the ground, the approval of Engineer shall be obtained and requirements of respective standards with regard to identification and protection of such cables shall be followed.

In cable collectors the specified segregation between power and control cables shall be maintained throughout the whole run of the systems.

The location and arrangement of cable grooves required for tubed cable systems shall be subject to approval by Engineer.

2.2.4.2. Grounding

General Requirements

Metal framework of all electrical and associated equipment, exposed building steelwork, metal enclosures and associated screenings, supports, doors and any other metalwork that are not normally used to conduct electricity shall be effectively earthed at all times in accordance with relevant standard. The Contractor shall deliver and install complete grounding system in accordance with relevant standards.

03/12/18

Each grounding system shall include:

- Main ground terminal or bar. Each main ground terminal or bar shall comprise of a wall mounted steel box, non-ceramic support insulators and bar of sufficient length to accommodate all connections.
- Grounding comprising of grounding strips and rods or plates, connected to main ground terminal or bar.
- Ground bonding conductors connecting metal pipes (gas, water,...), exposed conductive parts and any external conductive parts to the ground terminal or bar.

Grounding Systems

Grounding system shall comprise ground strips, rods, mesh/plates or a combination of them, in order to obtain the required ground resistance.

Ground strips, rods and mesh/plates shall be placed into the ground in accordance with relevant standard. When the installation is completed, soil resistivity or other tests shall be carried out and witnessed by the Engineer, in order to ensure that the required ground loop impedance figure falls within the limits defined in the relevant standard.

Lightning Protection

All structures and buildings shall be provided with lightning protection in accordance with relevant standards. Each structure shall be provided with one or more lightning arresters mounted at the highest points of the building or structure.

2.2.5. Automation Equipments

The control and automation equipment shall comply with the operation conditions and environment for which they were designed:

- Its routine and occasional maintenance throughout its life shall be a practical minimum, compatible with the preservation of maximum reliability.
- It can withstand the electric, mechanic and atmospheric stresses to which it may be subjected under operational conditions, without deterioration or failure.
- It is constructed to the highest available quality standards with stress laid on reliability, accuracy and repeatability.

Where more than one component or item of equipment is supplied to perform a particular function, all such items shall be identical and interchangeable.

The degree of protection for equipment enclosures shall be in accordance with relevant standards as follows:

- IP54 for indoor applications
- IP65 for outdoor applications
- IP68 for sensors/transducers and other equipment mounted to valve chambers or similar locations

03/12/18

All equipment cabinets shall have lockable doors and any ventilation openings shall have effective dust filters. Any cooling fans shall have fan failure alarm contacts connected into the relevant alarm system for the event of failure.

External equipment shall be protected from direct sunlight by a well ventilated cabinet, canopy or other approved type of protection.

Equipment in air conditioned locations shall be rated for continuous operation in ambient temperature up to 35°C. External equipment and internal equipment not in air conditioned locations, shall be rated for continuous operation over the ambient temperature range -20°C to 40°C or according to requirements of relevant standard.

All equipment shall be protected against aggressive and/or corrosive environment.

All analogue transmitters, receivers and direct wire transmission systems shall have a signal level of 0/4–20 mA or 0–10 V.

2.2.5.1. Software

Software shall be of modular arrangement and adopted for the operation of reservoirs, pumping stations, municipal waste water treatment plants and waste water pumping stations. The use of *Beta versions* is not permitted.

All visualisation and records must be in the national language.

The Contractor guarantees to deliver troubleproof tested software that has been successfully in operation in corresponding environment according to the state-of-the-art technology.

Payment of all licences to the licence bearer must be settled by the Contractor.

All information to be monitored shall be displayed on a fully graphic colour monitor.

Software applications, programmes and macros as well as process diagrams and technological parameters shall be on-line producible, rectifiable and extensible.

The Contractor shall ensure delivery of a functional complete system meeting the requirements of specifications.

The Contractor shall ensure that the required functionality will be provided when using the offered components. Parts that are not specified must be described in technical terms.

2.2.5.2. Operating System

Modular configuration of the system and possible extension necessary for future presupposes an operating system meeting the following specifications:

- 64-bit operating system
- Completely multitasking and multi-user system, "collapse-free" application ensuring that potential failure does not cause collapse of other programs or the whole system
- Integrated network support enabling the relevant administrator to divide computer capacity and allocate rights and tasks within the network
- Compatibility of the network with another networks to be connected

03/12/18

- Access and safety control by passwords and login protection which can be adjusted by the administrator (possibility of various access levels)
- Possibility of remote display via the internet
- Possibility of remote maintenance via the internet
- Hardware independence on manufacturer, operable on power computers or terminals
- Open, modular structure
- Platform with free configurable and menu operated windows
- Programming language C must be available for the offered operating system

The above requirements must be met for both process data server and all peripheral computers.

2.2.5.3. User Platform

The staff should not be considered to be familiar with the software, programming and operating system needed to operate the computer. For this purpose an application software package must be offered which enables the operator to carry out changes in the protocols, reports, parameters of failure reports and operating messages, analogue values, commands, numerical values, data from laboratory, calculated values, process pictures etc. Software for process displaying must be set up user friendly in graphical user interface.

Furthermore, the software must meet the following requirements with respect to controllability:

- Application of windows with the option to shift the windows, maximise/minimise them and change their priorities (overlaying of windows).
- The application software must identify erroneous steps and nonsensical commands in such a way that the operators are not faced with the problems of basic functions of the system software and the operating system.
- Fault messages must be displayed by the system as a non-ciphered text. On-line help must be provided with detailed instructions for a corresponding fault message.
- The system shall offer the user created options preferably in the dialogues, e.g. by virtual control areas or items in the menu.
- Manual inputs (via the keyboard) and laboratory values are generally subject to the check of correctness before being accepted by the system (e.g. a check of limit values, level of user's security).
- The system functions available to the user must be displayed in a logical structure in the so-called menu displaying in the form of non-ciphered text. The selection of individual sub items of the menu provides for new partial functions so that the system can interpret the users wishes explicitly.
- At any moment there must be an option of cancelling the actual choice or aborting execution of a command. Even aborting of the last entered parameter or the last

03/12/18

command must be feasible through the choice of the control area or a functional key (Function UNDO). Generally it should be possible to cancel more commands/inputs.

- Options for selections that are not available at the moment must be clearly marked as „Function not possible" (e.g. grey background).
- In order to enter parameters (limit values, range of measurement switching points etc.) it is necessary to have masks for entering available. These must be standardised for the purpose of uniform attendance.
- When shifting the mouse cursor to a selectable object a corresponding command/function appears with is consequences in a form of an non-ciphered text in the status line. There should be an option for switching off the status line.
- The user shall have at his/her disposal the actual options for selections with their consequences in the form of non-ciphered texts so as to avoid permanent browsing through the user manuals.
- Sufficient helps concerning the arrangement of the keyboard shall be available. For frequently used commands, e.g. reset etc. there should be an option of effecting these commands through the functional keys.
- The software shall provide the user with an option of switching on the screen saver, activated in adjustable time intervals

2.2.5.4. System Spare Capacity

Basically, the whole system shall be designed so that at least 30% spare capacity will be available to the Employer after the hand-over for the purposes of extending the data volume, or for new additional/extended functions or modules for hardware and software.

Data memory dimensions (hard disk etc.): min. 100% spare capacity.

The Contractor shall ensure that at least one more service computer/service process station can be integrated into the system - with no requirements for software and hardware extension (the exception being network connections).

The Contractor shall include the spare capacity or possibility of extending in the unit price.

2.2.5.5. Minimum Response Time

All the equipment for process control (as well as for the substations) must be designed in such a way that the following minimum response time is kept upon displaying of processes, displaying of curves and interference in the process:

- For the path from operator's interface (keyboard, mouse or trackball, monitor) through the HMI, communication devices (LAN network, GSM network) and PLC up to the final control element and back (confirmation of the interference) it is necessary to keep a total response time of max. 1 sec in the final configuration (the time required by the final control element for answering back not included).
- The processing and response time of the system for the process control in total < 1 sec
- Other response times in accordance with the corresponding subchapters.

03/12/18

These response times must be guaranteed:

- For final configuration of the equipment
- For graphic displaying on service computer with a minimum resolution of 1920 x 1200/true colours
- For loading of the service bus-bar of the network (e.g. continuously operating streamer)
- For continuous operation of all the terminals
- The stated periods shall allow for prolonging if a special case of loading occurs at a time of picture modification

2.2.5.6. Adjusting of Analogue Signals

The software must include an adjusting system for analogue signals by means of which the analogue signals can be individually adjusted. The adjustment shall be carried out by the Contractor. The following characteristics must be supported:

- Adjustment of all analogue PLC inputs (4-20 mA, range of measurement min/max, format of figures etc.).

2.2.5.7. Plausibility Control of Measured Values

In order to capture incorrect or wrong measured values, the user must have a chance to set ranges on plausibility for each of the analogue signals (measuring). The upper and lower limits of the plausibility range must be adjustable in the corresponding unit of measurement (e.g. l/s, m3/s. °C etc.). A signal which is out of the limits determined by the operator must be replaced by a different value (see Substitute Values).

In the case values are out of the plausibility range it is necessary to have a corresponding entry in the protocol or to carry out further data processing.

Determining of the plausibility range is carried out by the Employer and should be a part of the training.

2.2.5.8. Substitute Values

The operator must be given the option of pre-selecting the plausibility range for all analogue signals (e.g. in a table containing all the measurements for each single measured value separately). Both the manual activation of the substitute value (by the operator) as well as automatic activation shall be possible. The substitute values are then applied automatically if:

- The relevant analogue signal in the range 4-20 mA drops below the limit of 4 mA (the measuring instrument is disconnected or cable is broken),
- Limit values entered by the operator are exceeded or not achieved.

The substitute values shall be designated to the protocol in a corresponding way, i.e. shall be marked by the "substitute value" flag and displayed.

03/12/18

2.2.5.9. System Start-Up

Use of uninterrupted power supply equipment (UPS device) should prevent the failure of server stations. If, despite all preventive and back-up precautions, there is a failure of the computers, an independent start-up of the system shall be executed as described below:

- Automatic record of the time of failure (based on the last archived records) and time of return to be entered into corresponding protocols
- Record of the system failure in the protocol on event and fault list
- Standardising and initiation of substations (general enquiry) to update the data bases
- Time synchronisation of all substations to the system time
- Display of the actualised overview picture of equipment
- Display of actual alarms in alarm window

2.2.5.10. Password Protection

Password protection must be set up for all server stations, main programming computer and all other computers specified by the Employer.

When allocating passwords consideration must be given to different authorisations and tasks delegated to the operating staff. These must correspond to the possibilities of service activities.

Entering of passwords or safety levels of passwords shall be carried out by the Contractor in accordance with the Employer. The administrator must have the option of free selection and modifications of passwords for authorised personnel.

The passwords must be available on selective bases, e.g. also for various levels:

- Monitoring
- Operating
- Access to reading of archive files or protocols/reports
- Access to writing to archive files or protocols/reports
- Reset of alarms/failures and warning messages
- Reset/confirming/zero setting of procedures for maintenance
- Process control (individual control, changes of values and parameters)
- Manual entering
- Changes in protocols and balances
- Programming of picture and protocol generation
- Programme changes in substations
- Connecting assignment in the substations
- Assignment of non-ciphered text

03/12/18

- Changes of remote alarm connections

2.2.6. Mechanical equipment

The following articles specify general machine & technological requirements and standards of implementation for machines, equipment and installations. The requirements are generally valid with the exception of cases when Employer's requirements declare other specifications.

All technological equipment shall be approved by appropriate authorised bodies (technical inspection) after they are installed.

2.2.6.1. Rating the Machine Equipment

All materials shall be suitable for the respective use, new and of first class trade quality, without imperfections and with guaranteed long life and minimum maintenance.

The materials shall be selected according to intended use of the special parts and their loads. As a result of increased load and requirements in waste network, painting systems are only suitable under certain conditions and their maintenance is much more costly. Concurrently, attention shall be paid to the use of steel and its specific resistance.

In consequence of required strength and higher weight, frames shall also be made of steel or cast iron. However, unless they are made of grey cast iron or unless otherwise stated in Employer's requirements, the delivered frames shall have bright surface finish, be sandblasted and hot-dip galvanized.

It generally applies that jointing and anchoring material, pipe clamps, brackets and pipe hangers which will be permanently or partly immersed in water shall be made of stainless steel; others, placed in permanently dry environment, may be (with the exception of anchoring to concrete) delivered as hot-dip galvanized.

2.2.6.2. Transport, Dispatch and Installation of Equipment

The contractor shall suggest their own process of transportation and acceptance of machine equipment delivered to the construction site or to storage facilities, and shall be responsible for any damage that can appear during the take-over phase. The contractor shall, at their own expense, ensure all equipment, tools, measures, pressure gauges, temporal place of residence and all qualified and non-qualified staff required for installation of the entire machine equipment and accessory in order to allow its complete installation and hand-over in good operation state.

Before starting these actions, the contractor shall examine the construction part and together with Engineer execute all necessary measurers to allow machine equipment installation without interfering with other works and operation of other machine and electrotechnical equipment. Before delivering the main machine equipment, the contractor shall supply all auxiliary parts needed for implementation together with the main equipment to the construction site.

The contractor shall expect that the works on construction site will be interrupted as to allow permanent operation of the existing machine equipment. The contractor is expected to include sufficient time reserve for the above consequences.

03/12/18

Technological part of the delivery shall contain all temporal structures required for assembling (scaffold mounting, supports...) that may be needed and necessary for safe and efficient construction and assembling of the all work and auxiliary works. These temporal structures shall be provided at the contractor's own expense. Any special construction hoist needed for the equipment transloading shall be ensured by the contractor on their own expense and left on the construction site for Employer's use without charge after the Contract termination.

The contractor shall provide appropriate protection of the machine equipment till its installation and until the Acceptance Report is issued for the delivered equipment. Specifically: the contractor shall provide and fix sufficient covering by tilts etc. to prevent penetration of dust and impurities during construction phase and until termination of final construction works.

Functional processes must always be adjustable and must allow advance setting (tuning) unless otherwise stated. The electrotechnical equipment must be delivered as to allow its fully automatic operation without potential supervision. It must include all necessary safety and regulation components and devices as well as the respective operational manuals and guidelines for emergency situations.

All measurers shall be provided with respective certificates and calibration reports.

2.2.6.3. Noise Damping

Noise limits apply generally for all equipment and are as follow:

Spaces with occasional supervision	95 dB
Spaces with permanent supervision	55 dB
Offices	45 dB
Workshops	55 dB
Outside the buildings	70 dB
Border of hygienic protection zone	40 dB

2.2.6.4. Service Life

The following minimum periods of operation of various equipment and paints are required under the condition of adhering to proper operation, maintenance and inspections as stated in manufacturer's manual:

Pumps	8 years
Blowers	8 years
Stirrers	10 years
Air-entering elements	8 years
Paints	8 years

2.2.6.5. Selection of Materials

All materials contained in the scope of Contract shall be appropriate for the intended use, new and of first class trade quality, without imperfections and with long guaranteed life and minimum maintenance.

03/12/18

The materials shall be selected according to intended use of the special parts and their loads. As a result of increased load and requirements in dealing with potable water, painting systems are only suitable under certain conditions and their maintenance is much more costly. Concurrently, attention shall be paid to the use of steel and its specific resistance.

In consequence of required strength and higher weight, frames shall also be made of steel or cast iron. However, unless they are made of grey cast iron or unless otherwise stated in Employer's requirements, the delivered frames shall have bright surface finish, be sandblasted and hot-dip galvanized.

It generally applies that jointing and anchoring material, pipe clamps, brackets and pipe hangers which will be permanently or partly immersed in water shall be made of stainless steel; others, placed in permanently dry environment, may be (with the exception of anchoring to concrete) delivered as hot-dip galvanized.

Jointing material for flanged joints under the ground – all screws, washers and nuts made of stainless steel A2 – 70.

Stainless steel must not be in contact with galvanised material (or each such contact must be separated by an non-conductive layer) to avoid galvanic corrosion.

2.2.6.6. Prevention against Corrosion

Anticorrosion protection of the structure shall be based on defining the environment according to the appropriate valid standard and requirements on the structure and surface finish service life.

Each surface finish shall further be provided in compliance with manufacturer's operation manual (e.g. first coat of paint, temperature for application, preliminary surface treatment by derusting, sandblasting etc.).

General

Works shall be done indoor, in dry atmosphere without dust.

First coat of painting system shall be provided within 2 hours after the surface is cleaned.

Materials used within one painting system shall be mutually compatible.

Paints shall be provided in layers of even thickness.

Drops and air pockets are not permissible.

Each coat of paint shall be of different shade.

Subsequent coats of paint system shall be provided in mutually perpendicular directions.

In the case of damage the rust has to be removed by a sharp tool or a brush.

Repairs shall be carried out as soon as possible, according to the prescribed procedure.

No cleaning of paints shall be carried out without Engineer's approval.

Thickness of layers shall be measured after they dry.

When mounting stainless steel pipes, the following principles have to be followed:

03/12/18

- When working with stainless steel it shall be observed very strictly that the high quality steel in principle never gets to any contact with standard steel.
- Stainless steel shall be handled skilfully and with great care. Pipes and fittings shall be stored on pieces of wood. Proper grinding and cut iron-free discs shall be used for grinding. When welding it, only the WIG, MIG and manual electrode processes may be used.
- Welded joints shall be pickled and passivated in the topping.
- Consistent metal separation shall be provided at holders (anchors), supports, flanges, threads etc. of other material than stainless steel.
- It is absolutely inadmissible to combine galvanized steel components with stainless steel.

Cleaning, Surface Preparation

Sandblasting of structural surfaces shall be in accordance with SA 2.5 (ISO 8501, SIS 055900) or SA 3. For hot-dip galvanizing the SA 3 is common.

Components shall be complete before sandblasting with the exception of places that cannot be accessed after welding. These shall be cleaned by sandblasting before the welding and must be inevitably protected afterwards.

Grease shall be removed before sandblasting; all parts shall be dry during the process.

Any roughness shall be smoothed, stopped and dressed after cleaning and before the paint; surface shall be clean.

Holes and draughts shall be treated and their surface may only be re-welded with Engineer's approval.

Blasting material shall be steel wire blasting medium (diameter 0.7mm) and mixture of steel wire blasting medium and steel wires (50% : 50%).

Rust from cast iron parts shall be removed with great care.

Before applying another protective coat, the surface shall be blasted or slightly ragged after hot-dip galvanizing.

Protection

Unless otherwise stated in individual items of the structure, the parts shall be protected as described in following articles.

External steel pipes buried under the ground

Two layers of two-component epoxy resin with 33% of micaceous iron oxide in 40 microns, doubled asphalt-impregnated felt.

03/12/18

Steel products inside buildings

Blasting SA 2.5 or SA 3, 30 microns of base zinc, 50 microns of two-component epoxy resin with 33% of micaceous iron oxide, 35 microns base layer of alkyd resin, two 35-micron layers of alkyd resin after mounting.

Blasting SA 2.5 or SA 3, 30 microns of hot-dip galvanization, slightly ragged surface, 40 microns of two-component epoxy resin with 33% of micaceous iron oxide, 35 microns base layer of alkyd resin, two 35-micron layers of alkyd resin after mounting.

Cast iron inside buildings

Light cleaning, 40 microns of two-component epoxy resin with 33% of micaceous iron oxide, two 35-micron layers of alkyd resin after mounting.

Steel parts inside buildings

Blasting SA 2.5 or SA 3, 30 microns of base zinc, 50 microns of two-component epoxy resin with 33% of micaceous iron oxide, 75 microns of base epoxy layer, 30 microns of polyurethane coating.

Blasting SA 2.5 or SA 3, 30 microns of hot-dip galvanising, slightly ragged surface, 40 microns of two-component epoxy resin with 33% of micaceous iron oxide, 75 microns of base epoxy layer, 30 microns of polyurethane coating.

The above layers of 75 and 30 microns may be applied after mounting.

Cast iron parts inside buildings

Rust removal, grinding, degreasing, to 40-micron layers of two-component epoxy resin with 33% of micaceous iron oxide, 75 microns of base epoxy layer, 30 microns of polyurethane coating.

The above layers of 75 and 30 microns may be applied after mounting.

Concreted steel parts

Blasting SA 2.5 or SA 3

Concreted aluminium parts

grinding and degreasing, two 100-micron layers of epoxy-tar coating.

Supports imbedded in concrete

Epoxy-tar coating.

Stainless steel

Without coating. Steel 17 240, DIN 1.4301 or equivalent.

03/12/18

Coatings

All delivered equipment shall be provided with protective coating or otherwise protected in compliance with requirements of respective valid standards. Machines, pipes, fittings and valves shall be provided with top finishing coat from the manufacturing plant.

Before applying the coating systems, the Contractor shall submit technological process of coating application including surface treatment before the coating application to Engineer for approval. Together with the technological process, material safety data sheet of coating materials shall also be submitted to Engineer for approval. In the cases that were not mentioned above the minimum requirement shall be synthetic paint in three layers with minimum total thickness of 150 microns.

When preparing the surfaces before the coating system application, the Contractor shall use materials and processes that do not jeopardize health of their own or other workers. The Contractor shall keep written records of the executed painting works, accessible for Engineer. All data important for quality performance of the work and quality ageing of coating shall be included in the records.

Generally, the following coatings can be applied:

Base zinc coating: two-component epoxy resin with 90 to 92% of zinc in one layer.

Epoxy resin: two-component paint on thixotropic base of epoxy resin (min. 15%) with 33% of micaceous iron oxide.

Epoxy-tar: fluid epoxy resin with epoxy equivalent 180 – 210. The ration of epoxy-tar shall be lower than or equal to 1 and the epoxy portion lower that 15 weight percent. Only inert fillers shall be accepted.

Alkyd resin: coating on the base of alkyd resin with at least 70% of dry matter.

Chlorinated rubber coating: coating with chlorinated plasticisers.

Base epoxy: two-component coating on the base of epoxy resin.

Polyurethane coating: two-component finishing coat based on polyurethane resin with at least 50% of dry matter.

Each surface finish shall be provided in compliance with manufacturer's operation manual (e.g. first coat of paint, temperature for application, preliminary surface treatment by derusting, sandblasting etc.).

All paints shall display high quality and long service life.

Coating Tests

Engineer is entitled to order:

Long-term testing by immersing two small parts to waste water, sludge or gas. Samples shall be immersed in water of 60°C for up to 96 hours. Result: no pimples, soaking or separation of parts is allowed.

l 03|12|18

Mechanic resistance: round plates loaded by tension in plate axes. Required strength for ripping shall be min. 500N/cm2.

Engineer is entitled to try in situ if the coating can be removed by normal knife.

Abrasion resistance: tested surface shall be placed under the angle of 45° under a glass tube, 2m long, diameter 22mm. Alumina dust shall be spilled through the tube to the tested surface with coating and it shall be detected if the base material is not visible or if coat layers do not come loose. Size of the particles shall be 20 – 30 according to the ASTM mash. Required resistance is min. 30l.

Tests shall be carried out on test surfaces supplied by the Contractor.

2.2.6.7. Hot-Dip Galvanising

Should steel or forge steel be hot-dip galvanised, the galvanization shall be provided by immersing to molten metal and shall meet all aspects of the respective valid standard.

After pulling the steel from galvanizing bath, the resulting finishes shall be smooth, continuous, without rough imperfections. Edges shall be clean and surfaces glossy.

Anticorrosion protection of parts of equipment accessories such as pumps, compressors, motors, gear boxes and hydraulic units shall be adjusted according to their main aggregates. Alternatively, the same method of anticorrosion protection shall be provided.

In the case that the anticorrosion protection differs from the above requirements, it shall be recorded under relevant items; such solution is only permissible with Engineer's approval.

2.2.6.8. Welding

Welded structures and technology shall comply with relevant valid standards.

All welding activities shall be provided under the most suitable working conditions with use of the latest state-of-the-art welding technologies. All welding is to be provided by welders skilled and qualified for the actual welding process. The welders shall have the appropriate professional qualifications.

Welding technology shall be selected with respect to materials that need to be welded. Methods and procedures accepted for welding in workshops and on the construction site shall be submitted to Engineer for approval before the works start, including the list and qualifications of welders and their identification numbers. Records of welding procedures and welders' qualification certificates for the performed work shall be archived within the construction site so that the Engineer can examine them at any time. It applies generally, that the contractor shall submit Engineer technological procedure for welding and shall only start with the works after they are approved by Engineer. In justified cases the suggested welding procedure shall be supported by test weld joints. Number and method of assessment for such test welding including its scope shall be agreed before its execution. In principle it applies that until the submitted technological procedure is approved or results of the test are not available, welding works shall not commence. Test weld joints shall be made on identical materials – quality and thickness of the base material, quality and type of additional

03/12/18

materials, other conditions of welding such as preheating, proper cooling or possible weld annealing.

If required by the nature of welding works, all welders shall perform a working test before the works commence. Only the welders who pass the working test shall be allowed to carry on with welding works. Welders permissibility shall be determined by Engineer or his/her authorised representative upon the qualification and working test results of individual welders.

2.2.6.9. Open Mesh Floorings

Unless otherwise stated in Employer's requirements, open mesh flooring shall have rectangular openings and be of non-skid surface made of hot-dip galvanized mild steel. Mesh floorings in distribution reservoirs and in potable water pumping stations shall be made of composite materials. These floors shall comply with the relevant valid standard and shall be subjected to Engineer's approval.

All floors shall be rated at the min. load of 400 kg/m^2 per span and shall be equipped by a curb at the side of pathways.

Stairs shall be rated, manufactured and assembled as to be able to bear 400 kg/m^2. Treads shall have open meshes and shall be fixed to string boards, not directly to concrete.

Stairs shall be made of hot-dip galvanised steel. They shall be manufactured outside the construction site and shall include string boards supporting the treads and completed by handrails and posts.

2.2.6.10. Handrails and Ladders

Unless otherwise stated in Employer's requirements, all handrails shall be made of stainless steel or composite materials and shall be constructed and manufactured in compliance with valid standard measures and other applicable legislation on safety requirements.

All ladders, stairs or other openings shall be protected by handrails in such manner that complies with valid standard requirements. Access to ladders or openings shall be protected by two galvanised suspension chains fixed on one end and disconnectable on the other one.

Ladders shall be made of stainless steel, composite materials or mild steel, hot-dip galvanised in manufacturing workshops according to Employer's requirements. Profiles and distances of ladder steps shall comply with relevant standard requirements and other applicable legislation on safety and shall be equipped by flanges and drilled holes allowing wall installation on both sides. All ladders longer than 2m shall be equipped by safety cages or divided by a landing platform complying with requirements of valid relevant standards.

2.2.6.11. Lifting Devices

Lifting devices with gear and related equipment shall comply with relevant standards. The contractor is obliged to execute revision tests on all lifting devices.

Unless otherwise stated in Employer's requirements, travel cranes shall be manually or electrically controlled and shall include overhead travel, crane truck and hoist, electric motor,

03/12/18

gear box and machine equipment, operation and maintenance manual and all other necessary items such as bolts and nuts, shock absorbers, fixing elements etc.

Should the cranes be electrically controlled, they shall be delivered as complete with flat cables on roller suspensions, with control elements, gear boxes and motors providing 15m/min speed in both horizontal directions. Lifting speed shall be approx. 2m/min with travelling speed 0.2m/min.

Unless otherwise stated in Employer's requirements, electric cranes shall be controlled from the floor by mobile main controller with buttons or by a hoist controlling movements in all directions and speeds.

The delivery shall also comprise revision books of the equipment and static calculations for crane runways. Before putting into operation, all lifting devices shall be checked by technical inspection and Engineer.

If the existing lifting devices are to be used for machine and equipment installation (e.g. when replacing the machines and equipment), they shall be safe and functional. The Employer is obliged to provide the contractor revision reports on all these devices. The contractor shall not start these works before they receive these revision reports from the Employer.

2.2.7. Pipes

2.2.7.1. General Requirements

All pipes and mounting parts selected upon this Contract shall comply with respective standards, shall be of round profile and uniform thickness, without deposits, crimpage, detritus and other faults and shall be constructed to suit the intended operation media, pressures and temperatures.

Pipes shall be delivered and installed completely with all flanges, couplings, suspension systems of joints, anchors, anchor bolts and screws, anchor fillets in concrete, expansion anchors, flange packing, flange bolts and nuts, pipe supports, wall fittings, blank flanges, joints, accessories and materials necessary for proper installation and operation of the pipe.

Pipes shall be arranged in such a way as to allow easy dismounting of the pipe and other items of machine equipment.

Expansion and dismounting connections shall have double flanges. Dismounting connections shall be able to withstand total stress load of the maximum pressure that shall appear in the pipes.

To allow easy dismounting of all pumps, elastic flange connections in both suction and exhaust pipe and arrangement of these connections in relation to building structures must be flexible.

All pipes shall be appropriately supported. If the pipe goes through a wall, bushing and connection flange shall also be supplied. Terminal outlet connection of the pipe shall correspond with the connection point of external delivery pipe.

03/12/18

Pipe distributions and their fixing shall be provided in such manner that does not transfer additional load on necks of devices, pumps etc.

Pipe routes shall be earthed in compliance with requirements of valid standards in order not to transfer static electricity between individual parts. Flange connection shall be shunted conductively within the meaning of valid standards.

After the laying/mounting is completed, all pipes shall be tested in accordance with valid regulations and requirements of valid standards with respect to operation medium. The contractor shall submit the scope and form of examining in writing to Engineer for approval. Testing procedure shall also include required safety measures during the pressure test. Report shall be written about test course and results. The report shall be confirmed by signature of all test participants. In the case of an unsuccessful test, repeating of the test including test conditions shall be agreed in writing.

Pipes of Ductile Iron

All cast iron pipes, fittings, valves, and other components of water supply systems must comply with EN 545 and ISO 2531. Inner and outer surfaces protection of the piping must comply with EN 545. Nominal inner diameters must comply with relevant regulations.

Material production and quality

Ductile iron, also known as nodular cast iron, nodular-graphite cast iron, is characterised by the content of nodular graphite in resulting cast pieces. Compared to flake-graphite cast iron it has higher tensile strength, high yield limit, and high ductility. An internationally accepted value for ductile iron density is 7,050 kg/m2.

Ductile cast iron pipes must be produced by one of the following procedures:

- Centrifugal casting to metal moulds with or without lining,
- Centrifugal casting to sand moulds,
- Casting to sand moulds,
- Casting to metal moulds.

Ductile cast iron fittings and accessories must be produced by one of the following procedures:

- Casting to sand moulds,
- Casting to metal moulds.

Pipes, fittings, and accessories must be fitted with fixed or loose flanges.

Pipes and fittings may be supplied with various joint types. Pipes and fittings with socket joints sealed with elastomeric sealing rings and flanged fittings are recommended to be used.

Pipes and fittings must comply with relevant regulations and must pass all specified tests. Pipes, fittings, and accessories must not have any defects preventing their correct use.

03/12/18

In order to ensure changeability of supplies from various sources, plus tolerances of plain end outer diameter of pipes and fittings, if measured peripherally in the place of joining, shall not exceed 1 mm.

Fittings such as elbows, tees and reduction pieces shall comply with respective standards. Thickness of their walls shall be at least the same as the thickness of walls of direct pieces.

Protective coatings

All pipes and fittings must be supplied with coatings/paints applied in the production plants. Inner and outer paints must comply with provisions of a relevant regulation, must dry quickly and adhere, and must not peel off. Inner coatings must not contain water soluble components or admixtures which could give water any off-flavour or odour following a reasonable pipe rinsing. Inner coating of piping supplying potable water or edible liquids must not contain any toxic components.

Protection against corrosion must comply with relevant regulations.

Pipes of Stainless Steel

All pipes and fittings within pumping stations and shafts shall be made of stainless steel.

Steel pipes shall be joined by welding or through flanged joints.

Material production and quality

Pipes and fittings must comply with relevant regulations and must pass all specified tests.

Steel pipes and fittings must be manufactured in the production plant. Oblong and spiral shapes must be made by automatic submerged arc welding, except pipes with small inner diameters.

Protective coatings

All pipes and fittings must be supplied with coatings applied in the production plants. Inner and outer coatings must comply with provisions of a relevant regulation

Welding

Welding shall be performed according to provisions of relevant regulations and EN ISO 6520-1, EN ISO 6520-2, EN ISO 6947, EN ISO 9692-2, EN ISO 9692-3.

The contractor shall submit a detailed description of the welding procedure complying with a relevant regulation. This procedure must contain all dimensions, combinations of materials to be joined, and all repair welds. The procedure shall be approved by Engineer.

All welding work must be executed by qualified welders and strictly in compliance with specified welding procedures.

03/12/18

Protection against corrosion

Inner and outer systems of corrosion protection must be applied in the production plants. Pipes and fittings must be supplied to the construction site with sufficient amounts of materials enabling protective systems of welded joints to be finished on the site.

Where required by a relevant regulation, galvanic protection against corrosion shall be applied.

Fittings such as elbows, tees and reduction pieces shall comply with respective valid standards. Thickness of their walls shall be at least the same as the thickness of walls of direct pieces.

Unless otherwise stated, flange connections shall have welded edge ring and swing flanges. Distance circle of bolt holes and number and size of bolts shall comply with the respective valid standard. Stainless, aluminium or plastic flanges with internal metal ring can be used as swing flanges. Swing flanges and jointing material of galvanized metals are not allowed for stainless pipe distributions.

Plastic Pipes

PVC piping

PVC pipes and fittings for pressure-less usage must comply with EN 1401-1. PVC pipes and fittings of pressure systems must comply with EN 1452-3. Pipes of min. PN 10 shall be used.

With the exception of flanges joints and where specified or approved by Engineer otherwise, the pipe joints must be flexible and sealed with rubber rings or sealing approved by Engineer, and must pass all specified tests.

The min. rigidity of all pipes and fittings must be SN 8 (8 kN /m^2).

Sealing rings must not affect the piping system and must not cause failures of testing sets as specified in provisions of a relevant regulation. Material for sealing rings must comply with EN 681-1.

Adhesive must not have adverse effects on the properties of pipes and fittings, and must not cause leakage of the system.

Joining pressure PVC piping systems: Pipes and fittings shall be joined through in-cut socket joints fitted with elastomeric sealing rings which are included in the delivery. With other piping systems they shall be connected through preassembled loose flanges made of ductile cast iron and elastomeric sealing rings of cast-iron flanged joints.

Polypropylene (PP) piping

Polypropylene pipes and fittings for pressure-less usage must comply with EN 1852-1. PP pipes and fittings of pressure systems must comply with relevant regulations. Pipes of min. PN 10 shall be used.

l 03/12/18

With the exception of flanges joints and where specified or approved by Engineer otherwise, the pipe joints must be flexible and sealed with rubber rings or sealing approved by Engineer, and must pass all specified tests.

The min. rigidity of all pipes and fittings must be SN 8 (8 kN /m^2).

Sealing rings must not affect the piping system and must not cause failures of testing sets as specified in provisions of a relevant regulation. Material for sealing rings must comply with EN 681-1.

Adhesive must not have adverse effects on the properties of pipes and fittings, and must not cause leakage of the system.

Joining pressure PP piping systems: Pipes and fittings shall be joined by thermal welding as specified in relevant regulations:

- butt welding,
- polyfusion welding.

Polyethylene (PE) piping

Pipes and fittings made of high-density polyethylene (HDPE) must comply with EN 13244 (pressure applications), EN 12666 (pressure-less applications). Pipes of min. PN 10 shall be used for pressure applications.

The min. rigidity of all pipes and fittings must be SN 8 (8 kN /m^2).

Joining pressure piping systems: PE pipes and fittings shall be joined by thermal welding as specified in relevant regulations:

- butt welding,
- polyfusion welding,
- electrofusion welding

Pipes of smaller inner diameter may be joined also through mechanical fittings. PE pipes and fittings of pressure systems must not be joined with adhesives.

Pipes used for pressure supply of potable water must comply with requirements of EN 12201.

Glass-fibre reinforced plastic (GRP) piping

Pipes and fittings made of GRP must comply with provisions of a relevant regulation and of EN 14364. Pipes of min. PN 10 shall be used for pressure applications.

The min. annular rigidity of all pipes and fittings must be SN 5,000, or 10,000 according to the pipe laying depth and loading.

Pipes must have straight faces, smooth outer surface, and constant outer diameter along their whole length, enabling them to be cut and joined in any position along the whole length without any special preparation of the cut-off face, except resealing exposed fibres. Pipes

08/12/18

shall be joined by methods and with materials specified by their manufacturer (generally with couplings on rubber rings).

Drain pipes

Plastic pipes complying with relevant regulations shall be used, with circular cross-section, enabling continual piping of required length to be formed. Pipes walls must be perforated. Smooth, flexible or coated flexible pipes are permitted to be used.

Material quality

All pipes and fittings must be transported, stored, handled, laid, and joined strictly in compliance with the manufacturer's instructions and recommendations to prevent any damages to the material and insulation of the pipes and fittings.

The storage method of material for horizontal piping on the construction site must prevent it from being damaged or contaminated inside.

Plastic pipes must be resistant to ultraviolet radiation.

The Contractor shall inform the manufacturers on climatic conditions on the work site and apply for instructions for storing these materials on the site. After being approved by Engineer, these instructions must always be complied with.

2.2.8. Valves and Cocks

Valves and other closing cocks shall be supplied in compliance with respective measures of valid standards and with certificates of quality.

Material construction of closing valves shall suit working conditions and the medium according to appropriate measures of standards – ductile iron at least GGG 40, external surface finish – heavy anti-corrosion protection with blue top paint, internal surface finish – epoxy resin sintering with minimum thickness of 250 micrometers according to GSK, fittings – full flow.

Valves and cocks shall have the same DN as the pipe to which they are mounted. They shall have flanges according to the appropriate standard and shall be able to withstand the same test pressures as the pipe on which they are installed.

Valves and cocks shall have identification marks and/or labels in compliance with respective standards.

Mounting and application of valves and cocks shall comply with instructions and requirements of manufacturers.

Relief valves shall be set on manufacturer's test stand or by an authorised organisation and shall be provided with a label stating the test/opening pressure. Relief valves shall be supplied with certificate as described above and, on top, with a report on setting the opening pressure.

2.2.8.1. Closing Valves

All closing valves shall comply with the respective standard.

l 03/12/18 f

Closing seat wedge shall be led throughout the whole length of the unit by means of leading catch on the closing valve body and groove in the wedge, or catch on the wedge and groove in the body. Where necessary, gearing shall be provided so that the required operation force applied by hand to handwheel rim does not exceed 250N.

Extended valve rods, headstocks and foot supports shall be installed at places which require them for normal operation. Extended valve rods for all valves controlled by servomotors shall be supplied with supporting tubes between the valve and headstock to absorb pressure in both directions of operation.

All handwheels, headstocks, foot supports, guide brackets and supporting tubes shall be at least of cast iron. Permanently immersed parts and parts that are to be installed in aggressive environment shall be made of stainless steel if allowed by material construction of the controlled valve.

Footers shall be provided for larger valves.

Water Supply Closings (Discs - Gate Valves)

Closings on water supply networks shall have replaceable stem seal under pressure (under operation).

Closing seat wedge shall be guided by means of groves in valve body and plastic spindles on the wedge. The wedge shall be rubber-coated by antibacterial rubber of EPDM on all its surface, including the hole for stem.

Material specification: body, bonnet, wedge: ductile iron min. GGG 40 with heavy anti-corrosive protection according to GSK, rubber-coating of the wedge: antibacterial EPDM rubber, stem: stainless steel DIN 1.4021, stem and seal nut: brass, connecting bolt of body and bonnet: stainless steel DIN 1.4305, stem guidance: high-slide and abrasion-resistant plastic.

Closings buried under the ground shall be controlled by ground telescopic kits (control extension piece and coupling – ductile iron, extension rod – galvanized steel, pin – stainless steel, protective tube and base plate – plastic). The control extension piece shall be compatible with closing and valve spanner.

2.2.8.2. Safety Backflow Valve

Safety backflow valve shall comply with the respective valid standard. The body shall be of cast iron with two flanges of heavy anti-corrosive protection according to GSK. Size of the valve shall comply with contractual drawings.

All safety backflow valves shall suit operation in horizontal direction if it is favourable in view of operation and maintenance.

Footers shall be provided for larger valves.

Backflow Valves in Deliveries

Valves shall be placed on individual branches of pump deliveries in water-pumping stations. Backflow valves prevent reversed flow of fluids in the pipes.

03/12/18

Flanged check valve with free flow. Construction length of the 48 EN 558-1 line. Closing segment is a ball which stays away from the current when the fluid flows. In the design with sinking ball.

Material specification: Material construction of the valves shall be resistant against the effect of sewage waters. Body and service bonnet: ductile iron GGG 40. Sealing: NBR. Ball: aluminium coated by EPDM or NBR. Bolts: stainless steel. Surface finish: heavy anti-corrosive protection – coating the bell by epoxy powder also on the inside.

2.2.8.3. Control Pressure Valves

Control pressure valves shall comply with respective valid standard. Unless otherwise stated, control valves intended for pipe distributions to reduce, maintain or release the pressure shall be provided with two flanges of ductile iron min. GGG 40.
The valves shall be appropriately dimensioned in order to regulate the flow and pressure difference required for application; their full capacity shall be greater than appropriate for accepting the desirable max. flow rate at minimum required pressure difference.

Connection of the control circuit and application of reference pressure shall be arranged as to fulfil the requirement on pressure reduction, pressure releasing or maintaining constant pressure. Pressure gauge shall be installed to indicate the pressure.

Automatic Hydraulic Control Valves in Water Reservoirs

Automatic hydraulic control valves shall be installed on inlets and shall automatically fill water reservoirs according to water table in reservoirs. In normal operation they shall only open / close according to hydrostatic pressure in tanks that shall be transferred to the valves by means of pipe outlet from discharge piping (i.e. independently of electric power).

Automatic hydraulic control valves shall perform the following functions:

- The valve shall control filling of water reservoir in floatless manner; if maximum water table is achieved, the valve shall close for 30 seconds. When the set minimum water table is achieved, the valve shall automatically hydraulically open and fill the water reservoir.
- The operating office shall be able to open / close the valve at any time despite the current level of water table. Independent control shall also be possible directly in situ.
- The valve shall be equipped by glycerine pressure gauge of stainless steel to measure the pressure at inlet to water reservoir with closing ball valve of stainless steel.
- The valve shall be equipped by binary indicator of position linked to central control system allowing the operator to control valve opening.
- The valve shall also perform the function of backflow valve – prevention of reversed current.

Material specification: Main single-chamber valve: casing and bonnet: ductile iron min. GGG 40 with heavy anti-corrosive protection according to GSK, replaceable seat and counterpart: stainless steel AISI-316, shaft: stainless steel AISI-316, shaft bearings: stainless steel AISI-303, rubber parts: EPDM, cover bolts: stainless steel AISI-303.

03/12/18

Control system: control valves and filters: bronze ASTM B62, internal parts: stainless steel AISI-303 / EPDM, solenoid valves: IP 68 with manual control, backflow valves: stainless steel AISI-316, control pipes and threads: stainless steel AISI-303/316.

2.2.8.4. Air Relief / Air Inlet and Gas Relief Valves

Safety and relief / inlet valves for air and gas shall comply with respective valid standard. Air and gas relief valves shall be provided with at least two orifice plates. Inlet flange shall have the face and hole in compliance with the respective standard.

The valves shall be rated appropriately to release gas from pipes or tanks without reducing the speed of filling or flow as a result of back flow. Air shall be able to escape sufficiently quickly to avoid excessive reduction of pressure in pipes while they discharge.

Valves shall be constructed in such a way that operational elements do not get in contact with waste water.

All safety valves for air and gas and the related insulation valves shall be shop tested and able to sustain the same test pressure as the pipe or tank on which they are mounted.

Combined Impact Relief / Inlet Valve on Water Supplies

This automated combined impact relief / inlet valve shall be installed in water reservoirs and valve shafts on water supply network for automatic air inlet and relief of pipes. The valve shall let in and out great amounts of air when filling and emptying the pipes as well as rather small amount of air under normal operation.

Closing valve (closing or ball closing) shall be installed in front of each relief / inlet valve.

Relief / inlet capacity: approx. 200 l/s.

Material and construction specification:

Air relief / inlet valves shall be provided in compact single-chamber design with massive cylindrical regulation floats (of HDPE) in tube-shape body made of stainless steel with cast iron ends with epoxy coating surface finish which shall be joined by means of stainless tie rods and nuts.

Air relieving and suction (relief / inlet) shall be controlled by snapping or relief of three control floats depending on the speed of flowing air on rubber seal. Nozzle shall have flat contact surface preventing damage to rubber sealing.

The valve shall include automatically working incorporated mechanism of „anti shock orifice" which reduces pressure growth at transitional actions or shocks caused by closing to the value of max. 1.5 multiple of rated operating pressure of the valve.

Entrance hole shall be equal to rated size of the valve (e.g. a DN 50 valve shall have the entrance hole of 50mm).

Sealing of the exhaust branch shall be provided with flat face of control float against O-ring (EPDM rubber) placed in groove around the exhaust branch.

03/12/18

Design of the valve shall ensure safety in the case of overpressure without explosive effects which are quite common when highly compressed air is being relieved. This feature shall be based on easily replaceable parts such as sealing, wads etc.

Air Relief / Inlet Gate Valve Sets on Water Supplies

To deaerate water supply pipes buried under the ground, automatic air relief and inlet gate valve set shall be used. The gate valve sets shall be installed directly on tee flanges facing upwards.

The set shall be equipped by automatic stop cone in entrance part to allow repairs under pressure (under operation).

Relief / inlet capacity: approx. 50 l/s

Material and construction specification:

Body and float of the automatic relief / inlet valve shall be resistant to corrosion (e.g. POM + bronze). The actual automatic relief / inlet valve in the ground shall be protected by a stand (cylinder) of stainless steel with HDPE cover. Connection flange and bottom part – ductile iron min. GGG 40 with heavy anti-corrosive protection according to GSK. Drainage of the set shall be ensured by drain fitting and HDPE pipe. Bolts, nuts and washers shall be made of stainless steel.

2.2.8.5. Throttles

Throttles shall comply with the respective valid standard and shall be provided with two flanges with metal or elastic bedding and body of grey or ductile iron. They shall be sealed when closed and their diameter shall not be less than rated size of the pipe.

Among stop valves, Employer's requirements include also inter-flange throttles with the design: body – ductile iron with anti-corrosive protection min. GGG 40, closing plate . stainless steel DIN 1.4301, sealing insert EPDM – if allowed by operating medium, control lever – aluminium or ductile iron.

2.2.8.6. Servo drives (actuators)

Where required, the valves shall be controlled by electric servo drives (actuators). The valves shall open with such speed that prevents unfavourable shocks in pipe distribution system when opening or closing the closing cock or valve. **Where required, the Contractor shall prove the proper opening or closing time by calculation.**

Ingress protection of actuator, including motor, shall be IP68.

Actuators shall be designed for valve operation to ensure proper function in accordance to EN 15714-2:2010 electric actuators for industrial valves - basic requirements.

Actuator settings shall be performed non intrusive via push-buttons at motor control without special tools or instruments (e.g. battery backed setting tool).

Torque-transmitting housings must be made of cast iron, except motor housing. No plastic parts of any type shall be used, except for electric / electronic components, operating knobs / levers, indicator mechanism and sealing elements as far as applicable.

03/12/18

Electric motor

Motors shall be specifically designed for valve-actuator operation, characterized by high starting torque, low stall torque and low inertia. Motors shall be totally enclosed non ventilated type (TENV). Motor-insulation must be in accordance with IEC 85 Class F (155° C). Motors must be protected by thermal monitoring device, which is embedded in motor windings.

Motors must be totally separated from lubricant-filled gearing of actuator, allowing replacement of motor without loss of lubricant regardless of mounting position.

Actuator motors must develop full torque when power is turned on. All motors shall be of high starting torque type to facilitate 'unseating' of the valve.

Actuators must be selected to provide sufficient torque required for safe valve operation. Actuator output torque must be available at 90 % of nominal voltage.

Actuator shall be capable of opening and closing the valve against full differential pressure within specified time on valve data sheet.

Limit and Torque Monitoring

No battery backed limit sensing shall be used to avoid actuator malfunction in case of power failure. Actuators shall have a hall sensor principle based absolute encoder for limit sensing with a resolution of 3° or better. Actuator shall not be equipped with a battery.

Torque sensing shall be of mechanical sliding worm principle with torque values independently setable for 'OPEN' and 'CLOSE' direction. No electronic torque sensing derived from motor current or piezo-electric torque sensing at worm shaft. Torque setting shall be possible for 40% to 100% of rated torque.

Motor and local controls

Integral motor controls shall be microprocessor based and include mechanically and electrically interlocked reversing contactors for ON-OFF duty.

Local controls shall consist of motor controls, push buttons OPEN-STOP–CLOSE–RESET, lockable selector switch LOCAL-OFF-REMOTE and LCD graphic display clearly visible under all lighting conditions with plain text and in world languages, diagnosis symbols, graphs. Indication lights, available in different color codes, showing status information such as end position open/close, torque fault in both directions and motor protection tripped.

It shall be possible to re-position local controls at every 90°, so that push buttons and indication lights will face the operator.

All control signals, communication signals as well as main power supply must be wired to a multi pin plug and socket for customer connection. Terminal compartment shall provide sufficient space to accommodate the possible maximum number of incoming wires. A minimum of three cable entries must be provided for motor power cable and digital / analogue inputs and outputs. Each cable entry shall be properly sealed by cable glands during site installation.

03/12/18

Each actuator shall provide an adequately sized internal and external connection for grounding.

Anti-condensation heater

In order to prevent condensation, a heater must be installed inside the actuator, suitable for continuous operation. Actuator must provide an alarm signal in case of failure of anti condensation heater.

Hand wheel

Actuators must be equipped with a hand wheel for manual operation. Clockwise operation of hand wheel shall cause clockwise movement of output drive. Hand wheel shall be clearly marked with an arrow and the word 'CLOSE'.

Under manual operation, hand wheel shall drive the worm shaft. Self locking shall be maintained in hand operation. Motor must be disengaged during manual operation. Hand wheel shall automatically disengage when the electric motor is energized.

Hand wheel must be sized allowing easy manual operation of output drive. The over torque indication shall be active in manual operation as well as motor operation, thus allowing a signal to be provided when the set-torque has been reached.

Bearings and gears

Bearings shall be of antifriction or self-lubricating type. Bearings shall not require any maintenance between general overhauls. Power gears shall be made from heat treated steel. Actuator gear housing shall be filled with an adequate quantity of lubricant. Re-lubrication between general overhauls shall not be required.

Painting and corrosion protection

Actuator corrosion protection shall fulfil the requirements of EN ISO 12944-2, classification of environments C4 with a specified salt spray test of 720h. Actuator painting must be performed in such a way, that no corrosion takes place under ambient conditions as specified. All outside screws or bolts shall be made of stainless steel. Actuators shall be corrosion protected with a primer coating and a two layer powder coating consisting of an epoxy coating and a polyurethane top coating with a total film thickness of at least 140µm.

2.2.8.7. Slide Gates

Slide gates (sluices) shall comply with the respective valid standard and shall be made of cast iron or stainless steel according to specifications in Employer's requirements.

All gates shall be equipped by handwheels or gear controlled motors. Handwheels shall be placed approx. 1.0m above the floor unless otherwise specified. In the cases described in Employer's requirements the handwheel shall be equipped by an extension piece (stand). If necessary, guide brackets shall be provided.

The sluices shall be waterproof if the slope and flow direction corresponds with the respective article of Employer's requirements and/or contractual drawings.

03/12/18

All materials used for sluice manufacturing shall comply with requirements of respective valid standards.

2.2.8.8. Filters on Water Supplies

Filters with cleaning flange and outlet drainer shall be used to remove possible mechanic impurities from water in front of water meters or regulation valves. Size of filter meshes up to DN 65 – 0.9 mm, up to DN 125 – 1.25 mm.

Material specification: filter body: gray iron GG 25 with heavy anti-corrosive protection according to GSK, mesh: stainless steel DIN 1.4301, outlet drainer: brass, bolts, washers and nuts: stainless steel DIN 1.4305.

2.2.8.9. Flanges and Universal Couplings Secured against Motion

Universal couplings secured against motion shall be used for mutual connection of free pipe ends of cast iron, steel, PVC, HDPE, GRP and concrete buried under the ground.

For transfers from free pipe ends to flange connections, flanges secured against motion appropriate for involved pipe materials shall be used.

Material specification: coupling (flange) body: ductile iron min. GGG 40 with heavy anti-corrosive protection according to GSK, sealing: EPDM, screws, bolts, nuts and washers: stainless steel.

2.2.8.10. Rubber Expansion Joints and Assembly Joints

Rubber expansion joints

In water supply network inside the building objects, rubber expansion joints made of material meeting the defined operation conditions shall be used for expansion and assembly joints.

Material specification: elastic rubber part: CIIR, flanges: stainless steel, aluminium or plastic reinforced by internal metal ring. Swing flanges and jointing material of galvanized metals are not allowed for stainless pipe distributions.

Assembly joints

The valve shall allow dismounting of the installed valve and pipes.

Material of the assembly joints shall be resistant to effects of water; to be fixed to delivery pipes by flanges.

Material specification: body: ductile iron GGG-40, sealing: asbestos-free, surface finish: anti-corrosive protection – coating the bell by epoxy powder also on the inside.

2.2.8.11. Pipe Saddles

To connect service branches within a reconstruction or when re-laying PE distribution water supply network, electric fittings of HDPE 100 shall be used – drilling T-pieces with a valve, extended branch and freely attached sleeve. Branching part shall be extended to allow repetitive welding of service branches.

Valves (gate valves) shall be controlled by telescopic gate valve sets for used T-pieces with a valve. Extension piece for control shall be compatible with gate valve and valve spanner.

03/12/18

Material specification

Pipe saddles for HDPE pipes: sleeve and closing body: HDPE 100, control stem: stainless steel, bolts, washers and nuts: stainless steel, rubber sealing: EPDM.

Pipe saddles for steel and cast iron pipes: sleeves: ductile iron min. GGG 40 with heavy anti-corrosive protection according to GSK, sliding gate / closing / : forged brass, bolts, washers and nuts: stainless steel, rubber sealing: EPDM.

2.2.9. Water Meters

Water meters shall be supplied in compliance with corresponding measures of respective standards and shall be provided with respective certificates and calibration reports. Water gauges shall comply with valid legislation and be verified by authorised measuring group (proved by respective report).

2.2.9.1. Induction Flowmeters

Induction flowmeters shall be supplied in compliance with corresponding measures of respective standards and shall be provided with respective certificates and calibration reports. Water gauges shall comply with valid legislation and be verified by authorised measuring group (proved by respective report).

Supplied magnetic induction flowmeters shall contain control unit with LCD display, rubber lining, stainless steel electrode, connecting cable of required length (from the flowmeter to switchboard), at least IP 67, power supply 230V AC or after loop, output 4-20mA, 2x 0/1, defined gauge.

2.2.10. Pumps and pumping stations

2.2.10.1. General

The design shall comply with all safety directives and requirements of relevant technical standards. All rotary pumps shall be of the same brand mark. In the case that options are offered, all of them shall be of the same brand mark.

Pumps with unlimited pressure (volume type) shall be equipped by a safety pressure-relief device.

Pumps that are not resistant against dry operation shall be protected against damage by suitable measures and equipped by sensors of overheating and moisture penetration to electromotor.

Submersible pumps for waste water shall have efficient sealing between spiral case and moving wheel. Submersible pumps shall be equipped by mechanical seals, shall be self-supporting, continuously hydrodynamic lubricated and shall have varnished sealing faces. Submersible pumps installed in wet chambers shall be power-supplied by special cables delivered together with the pump and suitable for wet installation and permanent placing in water. The wiring shall be sufficiently long to allow comfortable local manipulation with the pump without the need to disconnect from the terminal box.

03/12/18

Waste water pumps installed in dry chamber shall also have the possibility to be submersed in the case the station is flooded. They shall have efficient sealing between spiral case and moving wheel. Pumps shall be equipped by mechanical seals, shall be self-supporting, continuously hydrodynamic ally lubricated and shall have varnished sealing faces. Pumps shall be power-supplied by special cables delivered together with the pump and suitable also for wet installation and permanent placing in water. The wiring shall be sufficiently long to allow comfortable local manipulation with the pump without the need to disconnect from terminal box.

Only materials suitable in view of corrosion and abrasion shall be used. If other materials are used, electrolytic corrosion shall be prevented.

Submersed bearings of threaded pumps or vertical pumps installed in wet environment shall be lubricated by means of special lubricating device.

Chains and chuting bars of submersed pumps shall comprise part of the delivery and shall be made of stainless steel unless otherwise specified. Chains shall be calibrated in such manner that allows direct inserting to lifting device.

Water tightness: Pumps installed in dry environment shall be tested for tightness with the pressure by 100% higher than the operation pressure or by other suitable equivalent means according to respective standard.

Pipe connection: Pipe connection for pumps with the pressure up to 0.4 MPa shall have the flange in compliance with valid standards.

Balance: All rotating parts shall be dynamically balanced.

Operation: Pumps shall comply with all designed operation conditions.

Components: All components shall allow for major repairs and all replaceable parts shall be available at hand. The delivery shall also include maintenance and repair manual and other detail documents.

2.2.10.2. Waste Water Pumping Stations

Submersible sewage pumps

Pumps shall be designed as single-staged, rotary sewage pumps for wet chambers.

Pumps shall be equipped by two mechanical seals in tandem arrangement or by combined double cassette seal.

Pumps shall be provided by humidity sensors of electromotor winding or control space and by evaluating units.

Pumps shall be driven by three-phase induction motor equipped by bimetal heat protection. Motor ingress protection IP 68, heat insulation class F (155°C). Motor shall be connected to electric distribution by means of connection cable. The cable shall be sufficiently long to allow comfortable local manipulation with the pump without the need to disconnect from the terminal box. Motor shall be suitable for permanent or intermittent operation (minimum number of starts 15x/hour).

03/12/18

Type of moving wheel – sewage, open or half-open with permeability at least:

- 60mm (delivery DN 80 - 100),
- 100mm (delivery DN 125 – DN 400).

Pump shall be designed for vertical installation on duckfoot elbow including guiding rods. Installation on guiding rods shall allow dismounting, assembling and fixing of the pump to operational position while the tank is full without the need to discharge it in advance. Lifting chain and cables shall be secured during the operation in order not to interfere with the moving wheel. Lifting chain shall be terminated under the pump mounting cover or under duckfoot of lifting bracket.

The pump comprises also cast iron duckfoot elbow, mounting kit for the duckfoot elbow, guiding rods, upper holder of guiding rods and mounting kit for the upper holder of mounting rods.

Pumps shall be equipped by a washout valve which shall allow mixing of the sediment in pumping tank before the actual pumping starts, or by other suitable device ensuring regular self-cleaning of the pumping tank.

Material specification (unless otherwise stated in Employer's requirements):

- casing, duckfoot elbow, hydraulics – grey iron
- moving wheel – alloyed abrasion-resistant material
- shaft, rotor, guiding rods, anchor bolts, guiding rod holder – stainless steel
- mechanic seals – tungsten carbide (WC or TC)

Sewage pumps in dry design

Pumps installed in dry chamber shall also have the possibility to be submersed in the case pumping station is flooded. They shall be designed as single-staged, rotary sewage pumps.

Pumps shall be equipped by two mechanical seals in tandem arrangement or by combined double cassette seal.

Pumps shall be provided by humidity sensors of electromotor winding or control space and by evaluating units.

Pumps shall be driven by three-phase induction motor equipped by bimetal heat protection. Motor ingress protection IP 68, heat insulation class F (155°C). Motor shall be connected to electric distribution by means of connection cable. The cable shall be sufficiently long to allow comfortable local manipulation with the pump without the need to disconnect from terminal box. Motor shall be suitable for permanent or intermittent operation (minimum number of starts 15x/hour).

Motor shall have surface cooling up to the output of 7.5 kW, or independent cooling circuit for outputs above 7.5 kW.

Type of moving wheel – sewage, open or half-open with permeability at least:

- 60mm (delivery DN 80 - 100),

03/12/18

- 100mm (delivery DN 125 – DN 400).

Pump shall be designed for vertical or horizontal installation on base (base shall form a part of the pump).

Material specification (unless otherwise stated in Employer's requirements):

- casing, hydraulics – grey iron
- moving wheel - alloyed abrasion-resistant material
- shaft, rotor, guiding rods, anchor bolts, guiding rod holder – stainless steel
- mechanic seals – tungsten carbide (WC or TC)

2.2.10.3. Water Pumping (Delivery) Stations

The purpose of all pumping (delivery) stations is to increase operational pressure in water supply pipes. Pumping stations are designed as complete with full equipment including internal liner – shafts with lockable cover.

General description of pumping stations

Complete automatic pumping station with two fully stainless vertical pumps. Each motor shall be equipped by control (with various performance parameters) which includes frequency invertor, governor and control unit. The control shall be able to cover pressure losses in pipes by increasing the pressure in % of the set value of pressure. Each pump shall also have pressure sensor 0 – 16 bar. It means that all components shall have 100% backup. As a matter of course the pumps shall change the control function, have cascade connecting, automatic change-over etc.

Pumps shall be able to work in three basic modes: each pump independently, in cascade connection, in parallel operation (all pumps regulate together).

Pumping station shall further include dry operation monitoring (by means of pressure switch, conduction probe, set of water level electrodes or by software),electric switchboard with circuit breakers and main switch, pressure vessel with bag (PN 16),shared suction and delivery pipes, pressure gauges with stainless casing in shared suction and delivery pipes, stainless backflow valves and closing valves.

03/12/18

3. DETAILS OF TESTS REQUIRED

3.1. INTRODUCTION

Take-over of the construction within this Contract is conditioned by Employer's satisfaction that the Works or part of the Works were completed, tested, proved, they are functional and were implemented in compliance with tender documents requirements and Contract for Work. All tests shall be carried out in compliance with requirements of respective legislation and the most recent issue of valid standards in Montenegro, EN or ISO. The standard determining stricter requirements shall be considered binding.

In the case that the tests were carried out to Engineer's satisfaction and all certificates, curves etc. were checked, Engineer shall submit written approval with all tests; no device, material or other parts of the Works shall be incorporated into the Work unless such approval has been issued.

Engineer reserves the right to request the Contractor to cover all additional costs incurred due to Contractor's mistake when fulfilling these tests including the payment for certificates, curves, sub-deliveries etc. or costs incurred, in Engineer's opinion, due to insufficient care of the Contractor or sub-Contractor before the equipment was subjected to inspection or testing. If there is an unauthorised delivery, the Contractor may be requested to ensure return of such device to its manufacturer for checking and / or witnessed testing at his own expense.

The Contractor shall ensure that all sub-Contractors receive a copy of these Requirements.

Details of each testing method suggested for each element shall be submitted to Engineer.

It is considered that the tender price of the Contractor, despite the scope of specifications in individual bills, include costs on all tests including temporary works, mounting, materials, tools, storing, fuel and energy used in course of inspections and testing, sampling and laboratory analyses (e.g. on water-supply pipes) as well as costs on providing test certificates, approvals and opinions.

3.1.1. General Requirements on the Tests

The Contractor shall carry out all necessary tests to prove compliance with requirements of tender base documents and operation conditions.

The tests shall include especially:

- Testing of machine & technological and electrotechnical equipment in manufacturer's plant. Tests in manufacturer's plant shall be carried out on all incorporated equipment which shall meet the requirements and operation conditions. No equipment shall be delivered to the construction site without act of the appropriate authority or without the Engineer's approval that the tests do not have to be executed.
- Tests of all machine and electrotechnical equipment after it is incorporated and connected to control system (e.g. motors, transformers, generators, pumps, control panels, switchboards etc.).

l 03/12/18

- Water-tightness tests of gravity piping, shafts, chambers, pumping stations, tanks and all other building structures that need to be watertight.
- All other tanks intended to accumulate water shall be subjected to water-tightness testing.
- Air-tightness tests shall be carried out on all building structures where air-tightness is required.
- Gas-tightness tests shall be carried out on all building structures where gas-tightness is required.
- After the pipe distribution system is installed strength and tightness tests shall be carried out in the scope required by valid standards and regulations for the involved media.
- Pressure tests of all pressure pipes both inside and outside the buildings including the fittings and welded joints.
- Individual and complex testing shall be carried out on all machine and electrotechnical equipment and all parts of control systems in order to meet Engineer´s satisfaction and approval.

General conditions of the tests:

- General conditions valid for tests shall be applied unless other requirements related to special operation are stated in detail in these specifications.
- For non-homologated equipment the Contractor shall allow Engineer, upon his request, to participate in the equipment homologation.
- Specific tests and revisions required under this contract are specified below but if the component supplier has own process of standard tests and revisions they shall be carried out and copies of the test and revision reports shall be submitted to Engineer.
- The Contractor shall carry out extensive tests and revisions in order to prove that the equipment and its operation meet requirements of technical specifications. The Contractor shall prepare list of suggested tests and revisions including but not limited to those listed in detail in the remaining part of the text which shall be submitted to Engineer for approval. The list shall be modified if Engineer considers it necessary.
- The Contractor shall be responsible for organising tests of the whole equipment and shall notify Engineer of the dates on which the test execution is planned at least three weeks in advance. Unless otherwise stated, the Contractor shall be responsible for supply of water, energy and material required for the tests execution.
- In the case that a part of the equipment does not correspond with the specifications, the Contractor shall immediately adopt measures and replace the equipment by another one that complies with the specifications or undertake other steps that can be suggested by Engineer.
- If any component of the equipment does not pass the required tests, the tests shall be repeated in appropriate intervals and under the same situations and conditions. Any

03/12/18

same costs arisen to the Employer in relation to the repeated tests shall be deducted from the contract price.

- Even if Engineer informs the Contractor that he will not be present at a test, the Contractor shall carry out the testing under the same conditions that would prevailingly appear if Engineer was present. The Contractor shall send Engineer detail results of the tests in writing.
- The Contractor bears the risks and costs for all tests carried out by Engineer or the Contractor.

Employer's participation in testing:

- Before the tests commence, the Contractor shall elaborate test schedule which he shall submit to Engineer and the Employer. The Contractor shall execute all tests in compliance with the Control and Testing Plan.
- The Contractor shall announce the term of the machine equipment tests execution at least 7 days before the defined date to both Engineer and the Employer.
- The Contractor shall announce the date of piping tests at least 24 hours before the defined term.
- Apart from Engineer's presence, the Contractor shall also allow participation of the Employer. In the case that the Employer does not turn up at the defined place and time and unless Engineer orders otherwise, the Contractor can carry on with the tests.

3.1.2. Testing Materials and Equipment

The Contractor shall ensure all equipment required for the Work testing or he can execute the tests himself or ensure a skilled sub-Contractor with good reference for these works. The sub-Contractor shall be approved by Engineer.

Before each test starts, the Contractor shall provide Engineer a list of testing equipment and instruments that shall be used for the testing.

3.2. TESTS – CIVIL PART

3.2.1. Testing of the water and sewage reservoirs tightness

Water-tightness testing of all reservoirs and tanks (e.g. for pumping stations, sedimentation reservoirs, activation reservoirs, thickening tanks, digestion tanks, sludge storage tanks etc.) shall be carried out in compliance with the respective valid technical standards and legislation of Montenegro.

Leakage due to untightness shall be measured in compliance with national regulations.

If there are no national regulations, the Employer shall decide if and how shall the tests be carried out.

The tests shall be carried out before the reservoirs and tanks are put into operation. If the design prescribes application of a protective, insulation or other layer, the tests shall only be executed after the layers have been applied. The tests shall be carried out before the

l 03/12/18

reservoirs are back-filled. During the execution of tests, ground water shall be discharged from the excavation. Tests shall not be executed at the time when freeze is anticipated in order to prevent water freezing in the pumping station. All openings and passages shall be blinded. All equipment related to tightness which can affect results of the tests shall be installed before the tests commence. Tests shall be carried out by potable water or water from local sources of satisfying quality.

Testing water level shall be the highest level defined in the design.

Tightness testing of the reservoirs, chambers and shafts shall be carried out in 100 % scope.

All costs related to the above testing shall be paid by the Contractor including the costs on media, feeding pipe, pumps, energy etc.

3.2.2. Testing of gravity sewers and branch sewers tightness

Tightness testing of gravity pipes shall be executed in compliance with standards valid in Montenegro, European standards EN or system standards ISO. The standard determining stricter requirements shall be considered binding.

To test the tightness of gravity pipes incl. the branch sewers, manholes and inspection chambers European standard EN 1610 "Construction and testing of drains and sewers" is provided.

The standard does not apply to testing of internal sewerage, open sewers, pipe sewers with pressure and under-pressure flow and for large structures on sewers (e.g. storm tanks).

Sewer sections which have not been back-filled yet shall be tested. Pipes shall be protected against shifting, if necessary, the pipes may be partly or fully back-filled – however, the connections shall remain visible.

Tests can be executed by:

- Water, or
- Air

If the prescribed test cannot be executed by water or air (e.g. in the case of special profiles or after reconstruction), other test methods may be utilized to prove the tightness (e.g. testing by smoke). Combination of water and air testing is allowed, e.g. sewers may be tested by air and shafts including branch sewers by water.

The test method shall be determined by the Employer.

Testing by air (method "L")

Duration of pipe testing with the exclusion of manholes and revision chambers depends on the pipe diameter and the testing method. Air-testing of manholes and revision chambers is difficult to perform in practice. To avoid errors caused by testing equipment, suitable air-tight covers shall be used. Instruments used to measure pressure decrease shall allow measuring with the accuracy of 10 %.

03/12/18

Initial over-pressure by approx. 10 % higher than the required testing over-pressure p_0 shall be maintained for approx. 5 minutes. Then the pressure shall be set to testing pressure defined by the standard. The pipe complies when the pressure measured after the test decreases less than by the pressure difference defined by the standard (Δp).

Testing by water (method "W")

Preparation

Sewers shall be water-tightly closed on both sides of the tested section as well as in connecting points of gullies and sewer branches. Endings and elbows shall be sufficiently secured against the strengths arisen during testing. When filling the pipes, creation of air pockets shall be prevented in the tested section. That is why the sewers shall be filled slowly to allow discharging of air through sufficiently big air valve or through the shaft on the upper end of the pipe. Therefore enough time shall be reserved for preparation and execution of the test. The sewers shall also not be damaged by over-pressure or in result of water hammer.

Testing pressure

Testing pressure is the pressure equal/implied by filling the tested section up to the ground level by the manhole located down-stream (in exceptional cases up-stream) with the maximum pressure of 50 kPa and minimum pressure 10 kPa measured on the top of the pipe. Higher testing pressures may be prescribed for pipes designed to operate under higher pressures.

After the pipe is filed, conditioning (adjustment) may be required. One hour is usually sufficient; longer period may be required in dry climatic conditions.

Duration of the test

Prescribed duration of the test is (30 ± 1) minutes.

Variation of the pressure within the testing shall not exceed 1 kPa in comparison to the prescribed testing pressure.

Requirements on testing

The amount of water added during the testing in order to maintain the prescribed pressure shall be measured together with the hydrostatic pressure of water and the required testing pressure. Testing requirement is met if the amount of added water does not exceed:

- 0.15 l/m2 in 30 minutes for pipes
- 0.20 l/m2 for pipes including the manholes
- 0.40 l/m2 for manholes and revision chambers

related to the inner wetted surface.

Testing of individual connections

Unless otherwise stated, individual connections may be tested for pipes greater than DN 1000 mm instead of testing the whole piping. In these cases, unless otherwise stated, the

03/12/18

area representing 1 m of the pipe length is taken into account. Testing requirements are identical with those described above with the testing pressure of 50 kPa measured on top of the pipe (at the shaft).

Technical requirements

After the tests for water-tightness are terminated, testing water from the tested section of the sewer shall be safely discharged to avoid flooding or other damages to the down-stream section or to the water receiver or to avoid negative impact on the waste water treatment plant.

If the tests for water-tightness prove that the sewer does not comply with provisions of the standard, faults shall be removed after their cause is detected and the tests shall be executed again.

Test report shall be elaborated for each executed test for water-tightness according to the selected method and regardless on the test result.

Apart from the tests, the Contractor shall carry out monitoring of all gravity sewer networks comprising part of the Contract. The monitoring shall be provided by industrial camera to Engineer's satisfaction. If the monitoring proves implementation discordance with tender documents, the Contractor shall implement all required repairs on their own expense.

Tightness testing of gravity sewers and sewer branches shall be carried out in 100 % scope.

All costs related to the above testing shall be paid by the Contractor including the costs on media, feeding pipe, pumps, energy etc.

3.2.3. Testing of sewerage delivery pipes tightness

Tightness testing of all delivery pipes on the sewerage and delivery pipes of WWTP shall be carried out according to Montenegrin valid standards, EN or ISO.

See chapter 3.2.5. Pressure testing of water pipes.

3.2.4. Ovality testing

Pipe testing for ovality is carried out in order to detect deformation of pipes after the compacted back-fill is provided according to Employer's requirements and according to appropriate legislation of Montenegro.

Maintaining of circular cross-section is deduced from digital camera recording as it allows random execution of accurate check of connection deformations that might show the proved ovality.

Calculation of the pipe ovality is described in the European standard EN 13 508 "Conditions of drain and sewer systems outside buildings".

Calculation result is a value in percents stating by how many percents the cross-section is deformed compared to 100% state of the pipe (circular cross-section without any damage).

Measuring and subsequent calculation of the pipe ovality are conditioned by quality equipment of the company.

03/12/18

Pipe ovality is measured and calculated especially on plastic pipes.

Camera monitoring shall be carried out in the whole scope of implemented pipes.

3.2.5. Pressure testing of water pipes

Pressure tests shall be carried out within the meaning of the most recent issue of standards valid in Montenegro, EN or ISO. The strictest requirements shall be the binding ones.

European standard EN 805 "Water supply - Requirements for systems and components outside buildings" is binding for pressure pipe testing.

The subject of the EN 805 – apart from general requirements on outdoor water distribution networks – is their execution, testing and putting to operation.

Another European standard EN 806-4 "Specifications for installations inside buildings conveying water for human consumption - Part 4: Installation" defines the requirements and provides recommendations for mounting of indoor water distributions and pipes outside the buildings located within the premises according to EN 806-1, sets the conditions for putting it into operation, filling and pressure-testing of indoor water pipes and flushing and disinfection of water pipes.

Pressure tests of these pipes are a process limited in time examining correctness of the embedded pipes; alternatively, potential defects of the piping which could have appeared during transport or embedding to the ditch are detected.

Pressure tests are carried out depending on the type of device generating the pressure by:

- Water
- Air under water (pipes under the water table)
- Air

The testing is carried out according to the following procedure:

- Test preliminaries
- Filling the pipe
- Pre-testing
- Testing

3.2.5.1. Test Preliminaries

Identifying pipe section which shall be tested

Part of the pipe section which shall be tested depends on topography, pipe dimension, difference of levels, pipe type and other conditions. Maximum length of the selected part of tested pipe shall not exceed 500 m.

In the case of great difference of pipe levels, such pipe section shall be selected that testing in the highest point of the pipe reaches at least the working pressures. Test pressure in the lowest point of examined pipe shall not exceed 1.5 multiple of the working pressure value.

03/12/18

Pipe support and anchoring

Before the filling starts, pipe shall be supported at both ends. Sharp bends, endings, connecting sections and valves should be secured in concrete anchoring blocks within the pipe bedding.

Size and anchoring of the supports depend on horizontal forces affecting the connection part and on permissible specific pressure of surrounding soils.

Permissible reference load of the ground in the depth of 60 cm for various types of soils is listed in the following table:

No.	Type of soil	Permissible load
1.	Marshy bottom, mud	0.00 kp/cm^2
2.	Soft soil	0.25 kp/cm^2
3.	Sand	0.50 kp/cm^2
4.	Gravel and sand	0.75 kp/cm^2
5.	Firmly adherent gravel and sand	1.00 kp/cm^2
6.	Stone sand, shale, soft rock	2.50 kp/cm^2

Pipe support at ends shall only be removed in the last phase of support removal.

3.2.5.2. Filling the Pipe

Filling the pipe with water

Pipe shall be filled with clean water in order to remove all air. It is especially important in such topographies where the pipe gradient goes up and down in turns. Discharging of air is necessary as its potential presence in the pipe could negatively affect water flow and the pressure test results.

Setting the pump pressure

Pumps for the test shall be located in such places that allow the operators to safely manipulate with them. Safety of workers carrying out the actual pipe testing shall also be ensured.

Measuring the pressure

The pressure shall be measured by pressure gauges with the scale allowing readings of as small pressures as 0.1 kp/cm2.

Reference pressure gauge shall be mounted in the lowest point of tested pipe section. Main pressure gauge shall be placed in immediate proximity of the pump where the analysis is executed.

Group of assembly men shall be present while the pipes are tested for pressure. It is also required that all persons authorised to sign the report on executed pressure analysis shall participate in the testing.

03/12/18

For safety reasons, no one is allowed to be in the ditch of the tested pipe section during the testing.

3.2.5.3. Pre-testing

After the pipe or its part is filled, it shall be loaded with the working pressure. Discharge the possible remaining air through air valves. The pressure shall decrease while the air is being discharged and after the discharging is finished, it shall be raised back to the working pressure level.

Check all connecting points and remove possible defects; then repeat the pre-testing.

The pre-testing shall last 12 hours. Every 2 hours, the pre-testing pressure shall increase up to the working pressure.

The highest testing temperature is considered to be 20 °C.

With regard to the fact that the pipe volume increases during the first 12 hours of keeping the pipe under pressure, water shall be refilled.

3.2.5.4. Testing

Testing pressures

Testing pressures are defined for pipe analyses.

In the case of air testing or air testing under water, the testing pressure is pi = 0.6 p.

If tested by water, the testing pressure is pi = 1.5 p

where p is the testing pressure.

The following table shows permissible pressures for pipe analyses for various types of pipes:

Working pressures for pipes (bar)	**Permissible pressure for pipe testing (bar)**	**Permissible pressure for pipe testing (bar)**
	Testing by air or air under water	Testing by water
6.0	3.6	9.0
10.0	6.0	15.0
16.0	9.6	24.0

When tested by air, the pipe is considered air-tight if the tested pressure remains constant for the period of 1 minute.

When the test is carried out by air under water, the pipe is considered air-tight if the tested pressure remains constant for the period of at least 2 minutes and no bubbles form in the water.

Types of pipe tests

The term "pipe analysis" describes

- Partial testing
- Main testing

03/12/18

Examining a part with interconnections up to 500 m

- Before the actual testing starts, pre-testing shall be carried out
- The test starts 2 hours after the last increase of pressure in course of the pre-testing phase
- The test lasts 30 minutes for each subsequent 100 m long pipe section but not longer than for 2 hours
- Joints shall be examined in course of 2 hours
- After the joints of the pipe or its part are examined, the pipe or its part shall be loaded with working pressure (1.5 p for testing under water)
- The pipe is considered to be tight if the pressure decreases within the last 30 minutes without re-increasing
- Up to 0.2 kp/cm2 per 1 hour

Main testing

- The purpose of main testing is to test pipe joints between individual parts of the pipe. It also serves as a load test of the whole structure before it is handed over from the Contractor to the Employer.
- Permissible test pressure for the pipe main test is 1.3 multiple of the working pressure.
- Pipe testing lasts at least 2 hours.
- The testing terminates in the moment when it is stated that all joints between tested parts of the pipe are tight.

3.2.6. Pressure test recording

Pressure tests shall be documented in the log; notebook shall also be kept where the following data are recorded:

- Number and date of the record
- Structure
- Project
- Employer
- Executor of the works
- Responsible authority

3.2.6.1. Pipe Description

- Symbol of water, type, location
- Number and location of the examined part or the appropriate pipe
- Type of joint, connecting parts, joint number

03/12/18

3.2.6.2. Pipe Test Information

- Type of the test (short, partial, main)
- Place where the pressure gauges are installed and their static head
- Prescribed test pressure at the point of pressure gauge installation for pressure pre-testing and testing
- Permissible decrease of the pressure due to pipe expansion
- Recommended duration of the test
- Real pressure read on the pressure gauge
- Real duration of the test
- Declarations stated on pipes, connections and valves
- Repeating of the pressure test
- Comments on handing the pipe over at the main test

3.2.6.3. Notebook Annexes

- Draft or drawing of the examined part or the appropriate pipe
- Draft or drawing of longitudinal part or the appropriate pipe
- Note about the pipe and connecting part manufacturer

3.2.6.4. Signatures of Authorised Persons

- On behalf of the executor
- On behalf of the responsible authority

The Contractor is obliged to refund the Employer all costs incurred during the Trial operation due to the defects on machines or equipment supplied by the Contractor upon the presumption that they were handled in compliance with service regulations or with written instructions of the Contractor.

Costs incurred in course of the Trial operation and related to the Work operation such as the energy, media, Employer's (or operator's) labour, transportation and discharge of produced waste shall be at the expense of the Employer or operator. Other costs are at the expense of the Contractor.

Costs caused by the Contractor shall be at the expense of the Contractor.

Tightness testing of water distribution pipes shall be carried out in 100 % scope.

All costs related to the above testing shall be paid by the Contractor including the costs on media, feeding pipe, pumps, energy etc.

l 03/12/18

3.2.7. Disinfection of water supply pipes

After the water supply pipes are constructed and pressure-tested they shall be flushed and disinfected according to Employer's requirements and according to relevant legislation of Montenegro.

Pipe disinfection shall be carried out by dosing of disinfection agent in pre-determined sections of the completed Work. Length of tested sections and detail method of the disinfection shall be agreed with the operator.

All activities related to pipe disinfection comprise a part of Employer's works and shall be included in Tender Price. The works for which the Contractor is not authorised shall be ordered at an authorised person (i.e. sampling and laboratory testing).

The disinfection in accordance with the above mentioned instructions shall be carried out in 100 % of pipes.

All costs related to the above tests shall be charged to the Contractor including the cost of media, filling pipes, pumps, energy etc.

3.3. TESTS – MECHANICAL AND ELECTRICAL PART

3.3.1. Tests in Manufacturer's Plant

3.3.1.1. General

Testing of the works and equipments shall be executed on all devices which shall be delivered before dispatching from manufacturer's plant; if it is not possible, Engineer shall be informed. Engineer shall be informed at least 21 days in advance that these tests are going to take place in order to be able to participate in the testing if he considers it necessary. Price of the equipment testing in manufacturer's plant shall be included in the price of the equipment delivery.

In the case that Engineer decides to participate in the testing, all tests shall be carried out in mutually agreed terms within 7 days from the originally defined date and shall be performed at Engineer's presence and to his full satisfaction.

In the case that Engineer decides not to participate in the testing, the Contractor shall ensure that the tests will be provided by his testing laboratory to allow issuing of Report on executed tests.

Each element of the equipment which shall be fully tested shall be located in such place and tested in such manner that are as close as possible to the conditions on the construction site.

Detail descriptions of executed tests shall be included in appropriate control plans.

3.3.1.2. Electric motors

Type testing of each motor according to relevant technical standards shall be provided by the motor manufacturer. Before each motor is delivered to the construction site, it shall be subjected to regular checking test. Motors shall be equipped by performance type plate with the information complying with requirements of relevant standard.

03/12/18

3.3.1.3. Witnessed pump tests

The Contractor shall prove that guaranteed data regarding the performance, input in kW, total efficiency etc. listed in technical specifications are met by each pump unit. It shall also comply with all Engineer's requirements in view of mechanical reliability of the equipment and its ability to fulfil all required characteristics.

It is usually required that all electric motors really delivered within the equipment according to the Contract are tested in manufacturer's plant and the results regarding efficiency etc. achieved during the motor testing shall be used for calculation of the equipment total performance.

If alternate current (AC) of the required voltage is not available at manufacturer's plant, the equipment shall be tested in compliance with Contractor's standard or by means of a calibrated testing motor but the Contractor shall meet Engineer's requirement that the test data for his machine are accurate in order to be able to define precise efficiency of the equipment.

The tests shall comply with relevant technical standards. Tests of measuring and control devices (measuring of flow, pressure etc.) shall be carried out with instruments or devices with the accuracy at least one order higher than accuracy of the calibrated devices.

Electric instruments which should measure input to motors, voltage and supply frequency shall be calibrated by an independent test within 12 months before the test is carried out and verification of the calibration shall be available for checking throughout the testing period. Engineer shall have the possibility to replace Contractor's instruments by his own ones which have the appropriate certificates as mentioned above.

3.3.1.4. Hydraulic pressure tests

All fitting pieces, cocks, pipes and any other elements of the equipment in manufacturer's plant which are subjected to pressure shall be hydraulically tested for maximum operation pressure defined by relevant standards and the prove that these elements were tested shall be submitted to Engineer.

3.3.1.5. Materials and instruments

All materials used for equipment manufacturing and all instruments that comprise part of the equipment shall be soundly tested in manufacturer's plant. Engineer shall be informed about the planned tests in order to have the possibility to participate in them. If Engineer requires, the Contractor shall send him signed verification of the tests and provide him all requisites regarding these tests as well as verification that they were successfully executed.

3.3.1.6. Control panels and switchboards

Testing of control panels and switchboards in manufacturer's plant shall be carried out in compliance with the list of suggested tests and checks approved by Engineer. Individual elements as well as the whole system functioning shall be tested. If control interface cannot be used, simulated signals shall be utilized. Number of simulated signals shall be minimized.

l 03/12/18

3.3.1.7. ACSTP and SCADA

After creating the control algorithm of technology, application software of PLC and HMI, visualization of supervisory control and data acquisition (SCADA), and other application program functions shall be tested and demonstrated the full functionality of the system and compliance with the requirements contained in this Tender dossier.

SCADA testing shall focused besides other things on:

On individual structures:

- Testing of software for technology control and local visualization (control algorithms)
- Checking the functionality of each input / output of each PLC and speed of display PLC input / output status changes on the HMI
- Checking the functionality of the control algorithms and ability to correctly respond to all operating states of technology.
- Checking and diagnostics of data connection to the control center (check connection speed, connection capacity, response time, etc.).
- Checking and diagnostics of data connection with follow-up objects (check connection speed, connection capacity, response time, etc.).
- Checking of the control algorithms autonomy of individual objects - if the data connection to the dispatching is not available, the control algorithms shall control the technology based only on available informations (for example peer-to-peer communication with follow-up objects) or should safely put the technology out of operation.
- Control algorithms optimization and tuning to avoid unnecessary network traffic.

At the dispatching:

- Checking of completeness and functionality of individual objects visualization (display of all detailed and updated informations of individual devices, machines and measured values).
- Checking the functionality of graphic presentations of regulated devices and relevant process parameters, display of alarm and incident history, graphic display of historic and real-time trends.
- Checking the WEB server functionality.
- Checking the hardware functionality.

Training:

Contractor shall prepare a detailed manual, which shall include a detailed description of the work activities and procedures for workers with SCADA system at various work levels. In the manual shall also be given a detailed description of each feature and of all the controls of the program (program menu and toolbars).

Contractor shall prepare a detailed clear and graphic instructions for individual screens and visualization schemes editing and modifying, or the creation of new screens and visualization schemes.

03/12/18

Contractor shall perform detailed training for Employer's workers of all work levels who come into contact with SCADA system both in the field (at a remote structures) and in the office (an electro technician in the field, electro engineer, mechanical engineer, technologist, dispatcher, IT technician, manager etc.).

3.3.2. Testing on the construction site

General

The Contractor shall carry out all necessary tests on the construction site under operation conditions in order to verify compliance with specifications to Engineer's full satisfaction. At least the following tests and revisions shall be executed:

- **Individual tests** – tests of individual building structures, machines or equipment in the scope required to check their completeness, functions and properly provided assembly. They comprise a part of assembly works and are included in the Tender Price.
- **Preliminaries to complex testing** – works required for individual testing in order to allow complex testing. They shall be included in Tender Price.
- **Complex testing** – works required to test groups of machines and equipment in mutual connections to prove that the delivery is able to enter the trial operation. They shall be included in Tender Price.
- **Trial operation** – the Contractor shall prove to full Engineer's satisfaction that the whole complex of technology, treatment and number of other systems are able to work reliably and meet the required performance criteria. Technological process and performance of each device shall be assessed after the trial operation and if the equipment does not achieve the above parameters, the Contractor shall implement adequate measures in both construction and technological parts.

Test conditions

- All works, materials and equipment for testing on the construction site shall be ensured by the Contractor.
- 21 days before the tests on the construction site start, the Contractor shall issue all details and program of suggested tests to be approved, and allow Engineer 14 days to comment or approve them. If Engineer considers these tests insufficient to prove the appropriate state, additional tests shall be carried out upon his instructions and their execution shall be at the expense of the Contractor. Tests on the construction site cannot start unless Engineer provided written approval to them.
- Engineer reserves the right to be present at any test or commissioning and shall confirm his intention by approval (or reservation). Should the tests be witnessed by Engineer, the Contractor shall inform him 14 days in advance about the date and place of the test execution.
- The Contractor shall be responsible for program coordination of all parts on the construction site and for ensuring that all involved parties will be present during the testing.
- The Contractor shall ensure that operation of any existing equipment is not disturbed in any way. Final discharge from the new operation which would not meet the quality

l 03/12/18

standards will not be allowed. The Contractor shall be responsible for ensuring temporal pumps, cocks, pipes etc. necessary to meet this condition.

- When carrying out the tests, the Contractor shall be responsible for overall safety measures related to this equipment and shall ensure that none of the people will be directly or indirectly exposed to any danger.
- The Contractor shall ensure revision certificate for the whole electric equipment and wiring before individual testing.
- The Contractor shall provide a check list accompanied by results and types of executed activities in order to eliminate errors. This check list shall be signed by Engineer as verification of the test execution.
- If, according to Engineer's interests, the tests on the construction site are delayed without proper reason, he can instruct the Contractor in writing to prepare them. If the tests are not carried out within 10 days from receiving this notification, Engineer may start to execute them on his own. All costs related to execution of these tests shall be borne by the Contractor.

3.3.3. Individual Testing

All parts of the equipment shall be tested in-situ after installation. Individual testing comprises part of the assembly of technological equipment.

Revision of Machine Equipment

The Contractor shall subject each installation and each element of mechanic operation to revision in order to verify that they comply with the relevant specification, design, manufacturer's drawings and material and manufacturing standards.

As soon as the Contractor is content that the operation meets all requirements he shall invite Engineer to execute his own revision. Any faults detected within this revision shall be notified to the Contractor and remediated to Engineer's full satisfaction.

Revision of mechanic operation shall include but not be limited to the following items:

- Identification plates, sound fixing, no physical defects etc.,
- All warning tables, protective equipment and covers,
- All fixings and lockable devices,
- Installation of sealing wads and lubrication of cocks and small machine equipment, checking of rotary drives,
- Machine equipment and drivers setting,
- Pipes and supports,
- Surface protection,
- Manually executed functional tests.

03/12/18

Preliminaries to complex testing

- The Contractor shall ensure functional testing of the whole equipment in order to secure that it works correctly within the electro-mechanic activity before complex testing commences. Functional tests shall include checks of all protective equipment and calibration and setting of the equipment in order to comply with specific requirements on the construction site or meet the operation parameters. The purpose of these tests is to simulate control of the system. If control interface cannot be used, the Contractor shall request simulated signals to allow testing of individual sequences.
- After the tests and revisions of the equipment are finished successfully as stated in these specifications, the Contractor shall put the whole equipment into operation as it would work under full operation conditions before complex testing is carried out.

Pumping station

- Apart from demonstrating proper functioning and checking of each pumping system element, operation of the pump on the construction site shall be tested. Delivery of pumps shall generally be measured by the volume of fluid pumped from an inlet source. If this method cannot be used, it is allowed to carry out other measuring tests of the performance or flow-through tests.
- The Contractor shall carry out hydrostatic testing of all parts of piping before their final painting and covering of supportive plinths, pressing blocks etc.
- Pumping station shall not be put into use until the above mentioned tests are completed and appropriate certificates issued in compliance with valid regulations.

Air distribution system

- The Contractor shall carry out revision and test all distribution pipes, fittings and other elements.
- After mechanic installation, checking of horizontal installation shall be carried out with Engineer's participation; the reservoir shall be filled by clean water up to the upper edge of aeration elements.
- Further, the tightness of the aeration system shall be carried out while filling the reservoir by clean water up to the level of 200 mm above the upper edge of aeration elements.
- At the end even air distribution in whole volume of the acquitation shall be carried out.

Lifting devices

- The Contractor shall carry out revision and tests of all delivered lifting devices and confirm that they are safe and in compliance with relevant standards. Certificates for load tests shall be issued both for the Work and for the load tests in situ. The Contractor shall provide all necessary testing loads.
- Lifting devices shall not be put into use until the above mentioned tests are completed and appropriate certificates issued in compliance with valid regulations.

03/12/18

All the above individual tests shall be executed to Engineer's satisfaction before the complex tests commence.

3.3.4. Complex testing

Complex tests shall be carried out on completed Work or parts of the Work in compliance with valid standards and legislation of Montenegro. Terms, places and methods of the tests shall be approved by Engineer. Unless Engineer instructs otherwise (e.g. for operation reasons), complex testing shall last 72 hours of continuous operation with the use of substitute media (pure water) before the Acceptance Report is issued.

Before the Acceptance Report is issued, Employer's personnel may only operate the Work under Contractor's supervision and the Contractor shall be fully responsible for Work operation throughout the complex testing.

Scope and content of complex testing including requirements on cooperation between the Contractor and the operator shall be defined in the "Draft and Preliminaries to Complex Testing" elaborated by the Contractor. Details of the Draft of Complex Testing and Program of Complex Testing suggested by the Contractor shall be submitted to Engineer for approval six weeks before the tests commence. These documents shall apart from the above test report also include Service and Handling Regulations as well as the respective technical drawings and test results for the equipment signed by the Contractor and Engineer. Service Regulations shall be elaborated by Contractor's designer. The Contractor shall be obliged to provide the designer with all required documents.

During the complex testing the Contractor shall prove to Engineer's full satisfaction especially the following:

- The completed Work is in full compliance with Contract provisions including and any changes approved by the Employer and incorporated into the technological equipment and the materials are suitable for their intended use,
- The Work or parts of the Work are prepared for Trial operation in compliance with parameters prescribed by competent authority including the limits allowed throughout the validity of permit for temporal use of the construction. It is considered that biological line of the WWTP is successfully set into operation if the guaranteed efficiency of treatment is confirmed on 7 samples during 24 hours while these shall meet the quality determined by competent body for Trial operation. The Contractor is responsible for achieving the prescribed efficiency of treatment and for quality of materials and products incorporated in the Work in compliance with the Contract specifications.

Complex testing may not start until the whole Work or parts of the Work are properly prepared for such tests. Schedule of starting up individual technological units and complex testing schedule shall be included in work schedule.

Within the testing all parts of the equipment and materials shall be tested to prove their compliance with the specifications at both automatic and manual operation.

28/12/18

Engineer shall be present at all tests with the exception of cases when Engineer does not wish to participate in the testing. In such case the Contractor may carry on with the works and/or tests.

The Contractor shall collaborate with Engineer throughout the whole testing and shall provide Engineer all the information he requires. The Contractor shall submit to Engineer report on the course of complex testing. The report shall include at least: beginning and end of the tests, persons who were present at the tests and short description of the tests of each device.

In the case that during the tests in turns up that the Work, products, materials or quality of works do not comply with contractual requirements, the Contractor shall, at his own expense, ensure appropriate modifications or repairs as well as the repeated tests.

The Contractor shall ensure such course of the tests as to avoid serious pollution of the environment and especially recipients in consequence of the tests. In the occasional cases when it is proved to be impossible due to the operation reasons, the Contractor shall notify this fact to Engineer. The Contractor shall also ensure that no sludge, filtrate, condensate or other waste waters or substances are discharged to recipients in the consequence of testing procedures.

As a part of completing of the complex tests, the Contractor shall issue Service Regulations for Trial operation. These Service Regulations shall be submitted for approval to the Employer, operator and the competent authority including all annexes (e.g. description of ACSTP structure and algorithms) not less than 30 days before the Trial operation starts.

The costs related to all tests carried out during the individual and complex testing including the cost of equipment and operation of testing devices, regardless whether the tests were carried out at manufacturer's plant or on the construction site and including all media (energy, water, sludge, chemicals) shall be charged to the Contractor in compliance with provisions of the Contract terms.

3.3.5. Operators' training

Before the Trial operation the Contractor shall ensure training of operators in the scope required for operation of the Work put to Trial operation and including the OHS training. Specific record shall be taken about this training.

Training of Employer's (operator's) personnel shall be included in the offer. The goal of the training is to ensure that selected Employer's (operator's) workers acquire the necessary knowledge on the installed technology, operation and maintenance of all the equipment included in the project with the aim to secure proper long-term operation and maintenance of all parts of the Work. The training shall take place before the approval proceedings.

Contractor's training for each type of work shall generally cover: knowledge of the whole system and proper operation of the installed technology, operation and maintenance of machines and equipment, quality control and safety measures.

The training shall generally include introduction of all aspects of the systems operation as a whole and also introduction of all specific items of the equipment. The training shall be

l 05/12/18 b

provided on the particular equipment and shall include implementation of operation and maintenance programs described in the Service Regulations and in the Maintenance Manuals provided by the Contractor.

The training shall also focus on specific requirements of the operation though the instructions and introduction for various involved workers will differ with respect to their abilities; it shall be anticipated that the workers will require highlighting of different aspects.

All trainings shall be successfully completed and declared before the respective part of the Work is subjected to Trial operation. If, due to the work development and daily operation of the equipment and systems, it is required to put any of the systems or equipment to Employer's (operator's) operation before the works are completed, the Contractor shall be responsible for providing all necessary instructions and training to Employer's workers in such manner that they understand the technology and operation.

The Contractor shall provide training materials for everyone and audiovisual aids including the notes, diagrams, films and other training aids required to allow attendance of later repetitive courses for self-taught persons.

The costs related to operators' training including the preparation of training material shall be charged to the Contractor in compliance with provisions of the Contract terms and conditions.

3.3.6. Trial operation

Trial operation may only start after the relevant permits for Trial operation of the Work are received upon the Employer's request.

The Contractor shall demonstrate to full Engineer's satisfaction that the whole complex of constructions, machines and equipment, control systems and sub-systems and the technological process are able to work reliably and meet the required performance criteria. The subject shall not be considered fulfilled if the operation requires high amount of user's interventions necessary to achieve the required level of performance.

Trial operation of pumping stations and WWTP shall in accordance with the terms and conditions of the Contract for Work. Apart from the assessment, the Trial operation shall be ensured by Employer's operator. Assessment of the Trial operation shall be provided by the Contractor. The trial operation shall commence with the approval of the respective authority and shall be carried out in compliance with Service Regulations for Trial Operation elaborated by the Contractor and in compliance with the appropriate decision.

The Contractor shall be responsible for methodical control and supervision of the trial operation. In this period the Contractor shall provide the Employer (operator) the knowledge and technical support. Related costs shall be charged to the Contractor.

Before the trial operation starts:

- The Contractor shall ensure training of the operators in the scope necessary for operation of the Work entering to Trial operation including the OHS training. Specific record shall be taken about this training.

03/12/18

- The Employer shall ensure approval of the Service Regulations for Trial Operation and the Handling Regulations.

The Trial operation procedure shall be approved by Engineer and the Employer. The Contractor shall be responsible for methodical control of the Trial operation. The Trial operation control shall include especially:

- Elaboration of methodical instructions for control of the Trial operation for each activity,
- Visual inspection of the pumping station and WWTP at least once a week; after the pumping station starts up regular operation monthly visual inspections are acceptable,
- Issuing of written instructions for operation control outside the scope of the Service Regulations,
- Notification to the operator, Engineer and Employer in the case that the Service Regulations are not observed.

Apart from the above issues, the Contractor shall during the Trial operation:

- Prove that the Work complies with specified design and operation conditions. The Contractor shall leave on the construction site sufficient number of specialised technologists, engineers and technicians in case of potential modification implementation,
- Ensure skilled personnel to assist at the Work operation under both normal and emergency operation conditions (as possible) with the aim to define optimal operation of each element and to elaborate initial records of the Work operation for later use,
- Monitor and keep the records and notify Engineer of the problems that cannot be settled in situ; provide recommendation of the problem settlement. The Contractor shall be responsible for all repairs necessary to achieve faultless operation of the Work. All these acts shall be provided at Contractor's expense,
- Accept requirements and recommendations of modifications from the operator as well as complements to texts of Service and Handling Regulations, base documents for project of maintenance of facility Documentation and for the Service Regulations for permanent operation,
- Elaborate the assessment of Trial operation for needs of the operator and/or the Employer.

The Employer shall coordinate his activities in order to fully use Contractor's technical assistance and to respect that the rights of involved parties are not interfered. To control the process, the Employer shall use solely the supplied control system of technological processes and shall respect the intervals defined in Service Regulations when entering free values. All other authorised interventions to algorithms or to the amount and range of quantities throughout the Trial operation shall be executed by the Contractor. All interventions to algorithms or to the amount and range of monitored quantities executed by the Contractor throughout the Trial operation and approved by the Employer shall be carried out in cooperation with the Employer and special records shall be kept on them. Before the

l 03/12/18

actual Trial operation starts, the Contractor shall submit the procedure of the control system complex test and description of the algorithms and possibilities verified by their correctness. This test shall be carried out at least three times during the Trial operation. Throughout the Trial operation the Contractor shall implement all modifications to the control system required by the Employer.

Faults that appear during the Trial operation despite its compliance with Service Regulations and Contractor's technical assistance shall be removed by the Contractor within the guarantee for the Work. In the case of doubt about the achieved performance parameters of the machines and equipment and if these parameters have to be verified, the Contractor shall ensure all necessary equipment required for these performance measurements and immediately carry out the required tests.

Technological process and performance of individual devices shall be assessed and if necessary, adequate measures shall be adopted on Contractor's expense both in the construction and technological parts. The Contractor shall guarantee that the parameters are met. The Contractor shall also guarantee manufacturing quality of all parts of the Work in accordance with the Contract for Work.

Within the termination and assessment of the Trial operation the Contractor shall implement all changes and the corrected elaborate shall be issued as Service Regulations for permanent operation. The Service Regulations shall be submitted to the Employer and the operator for approval including all annexes (e.g. description of ACSTP structure and algorithms) not less than 30 days before the permanent operation starts.

Functionality of each technological node of the WWTP verifiable by chemical analysis shall be confirmed by a number of analyses executed under stabilised operation state.

Costs of the described activities are included in Contractor's Tender Price.

It shall be considered that the Contractor terminated Trial operation of the Work or part of the Work if the time defined for Trial operation in compliance with Contract provisions and permits issued by competent authority (incl. potential prolonging of the Trial operation) expires and the following conditions are met concurrently:

- Quality of the Work or part of the Work was proved in compliance with the Contract,
- The Work ran throughout the whole period of Trial operation without stopping of failures that would affect final quality of the Work. Possible faults were removed to Engineer's satisfaction,
- Service Regulations for permanent operation were completed upon the knowledge gained during the Trial operation and were approved by the Employer, operator and competent authority,
- The Contractor sent Engineer confirmed report on the results of all tests and on assessment of the Trial operation.

The Contractor shall be obliged to refund the Employer all costs arisen during the Trial operation due to the failure of machines or equipment delivered by the Contractor upon the

03/12/18

presumption that they were handled in compliance with Service Regulations or Contractor's written instructions.

Costs arisen during the Trial operation and related to operation of the Work such as energy, media, Employer's (or operator's) labour or disposal of generated waste shall be charged to the Employer or operator. Other costs shall be charged to the Contractor.

Costs arisen due to the fault of the Contractor shall be charged to the Contractor.

If the duration of the Trial operation of any part of the Work lasts after the deadline for notification of faults caused by the Contractor, the Engineer shall not hand over the Work Completion Report to the Contractor and the deadline for fault notification shall be prolonged by this time.

l 03/12/18

4. DETAILS OF ALL WORK REQUIRED TO ACHIEVE COMPLETION

4.1. PARTICULAR REQUIREMENTS – TECHNOLOGICAL PART

The Works shall comprise designing, construction and commissioning of the WWTP Danilovgrad, tertiary treatment and sludge management. The WWTP Danilovgrad shall be designed for a capacity of 12000 PE and shall be built for 6,000PE in the Stage 1.

List of buildings and facility - for the design and erection of all necessary works

- Connection on the inlet main collector for the capacity of 130 l/s on the site of the WWTP
- Facility for the coarse screens for the capacity of 130 l/s,
- Facility for the inlet pumping station for the capacity of 26,3 l/s,
- Facility for the fine screens for the capacity of 26,3 l/s,
- Grease and grit chamber for the capacity of 26,3 l/s ,
- Connection between the aerated grease and grit chamber and the biological unit for capacity of 26,3 l/s,
- Biological unit for the capacity of 6,000 PE,
- Discharge pipeline from the secondary settling tank to the effluent measuring channel for the capacity of 26,3 l/s
- Shaft and facility for the service water preparation
- Effluent measuring channel for the quality of treated water and capacity of 26,3 l/s
- Disinfection of treated water
- Return sludge pumping station for 6,000 PE,
- Excess sludge pumping station for 6,000 PE,
- Facility for sludge thickening for 6,000 PE,
- Facility for sludge dewatering for 6,000 PE,
- Sludge storage tank for 6,000 PE,
- Facility for septic sludge delivered by trucks, receiving tank volume of 16 m3
- Administration building with laboratory, workshop and garage,
- Internal sewage system with sewage and internal recycles from sludge treatment,
- Rainwater will be introduced into the drainage
- Transformer station for the WWTP capacity 12,000 PE,
- Power generator for 6,000 PE.

➢ Landscaping works

03/12/18

- Access road
- Construction related to utilities connections (electric power and water supply and others).
- Trial operation of the WWTP in duration of 365 days.
- Sludge disposal in the Trial operation period will be done by Employer.
- Obtainment of an Operation permit including all the required consents and documentation (such as: expert report on explosion safety, summary of fire safety procedures, production of project of maintenance of facility).
- Training of the WWTP staff.

The scope of Works shall also cover delivery of Plant, test on Completion including operational trials, Tests after Completion, remedying of any defects in the Works and training of future (Employer's) End Recipient's WWTP staff. All activities necessary to be performed in order to put the Works into normal operation and to deliver them to the Employer shall also be carried out. The Conditions of Contract, Price Schedule, such as included in this Tender Dossier, shall be read in conjunction with the Employer's requirements. Matters referred to, shown or described in any of the formers are not necessarily repeated in the latter.

4.1.1. Wastewater Treatment Process

The design of the wastewater treatment plant for the town of Danilovgrad is based on the nitrification and denitrification treatment processes with chemical precipitation of phosphorus. Wastewater treatment technology is designed as circulating activated sludge process with pre-denitrification tank.

4.1.1.1. Structures on the sewer network

The hydraulic sewer capacity is about 130 l/s. The sewerage network contains the following constructions:

- Connecting shaft
- Receipt of collected sludge
- gravel trap
- coarse, automatically cleaned screens
- combined sewer overflow
- sewage pumping station

Gravel trap and screens serves as mechanical pumping station protection. Their hydraulic capacity is maximal sewer flow capacity. Storm water flow rate greater than 26.3 l/s. overflowed from the overflow chamber into the river. Flow rate of 26.3 l/s is a maximal hydraulic capacity of WWTP.

l 03/12/18

Connection to the main collector

Connection sewer system and wastewater treatment plant will be using connecting shafts. Trunk sewer ends in the object of overflow/relief and switching-off chambers. in front of the waste water treatment plant.

This object has to fulfill two basic functions:

- Control of inflowing quantity of waste water for the value Qmax = 130 l/s. In the gate chamber a control gate valve is fitted destined for controlling inflowing quantity of waste water.
- This gate valve warrants inflow controlling and/or full closing the waste water treatment plant inlet (in case of a heavy failure – e.g. electric power drop-out).

As for spatial arrangement of the overflow/relief chamber. this one is divided into two parts – to the overflow/relief chamber itself and to a gate/closing chamber. Overflow/relief chamber has been resolved as an overflow/relief chamber with a front over fall. Gate/closing chamber will be provided with a throttle gate valve being controlled manually with a round bottom destined for concrete encasement. Overflow waste water is introduced by sewerage systems into the river. This system also creates a bypass sewer of WWTP. Shaft location will be specified in the tender documentation for the wastewater treatment plant. as well as for the sewage system.

Receipt of content of cesspools and septic tank

Inside the facility shall be installed a compact unit for sludge receiving. On the inlet pipeline a flow meter. pH and temperature measurement probe and an electromotor knife gate valve are installed. The contents of the septic reception basin are dosed ahead of gravel trap and coarse screen. Dosage is blocked during storm water flow of wastewater. The level measurement inside the basin is with hydrostatic level measurement.

Gravel trap

After connecting shaft the waste water will pass via a gravel trap. Gravel trap is mechanical protection WWTP equipment against rough substances heavier than water. This is a pit that should be provided with a cage trash racks being placed at the pit bottom. Gravel and other rough impurities flowing in together with influent waste water will be trapped there. Extraction of trapped material shall be realized with the aid of a portable hand-operated crane. Hydraulic capacity of gravel trap is 130 l/s.

Automatic coarse screen

Automatic coarse screen should be designed for 100 % storm water flow (130 l/s). Screenings from the coarse screens fall into the conveyor and finally moved into the container. Ultrasonic differential level meter located ahead of the screens and behind the screens control screens operation. There is one line of mechanically operated coarse screens with 80 mm gaps. Screens will be placed in inlet trough. Rackings and other extracted materials will be transported from the coarse screens to a container by a screw conveyer.

03/12/18

4.1.1.2. Pumping station and mechanical pre-treatment

The pumping station capacity and pre-treatment facility of WWTP will be designed according to wastewater production rate.

Pumping station

The pumping station will be resolved as a basement object designed for a slight equalising of the sewage water and for the pumping of the sewage water through the pre-treatment into the biological part of the treatment plant. The pumping station will be equipped with submersion sludge pumps. The number and the capacity of pumps are selected in order to achieve a uniform supply to the treatment plant. The pumps will be operated automatically in dependence on the water level in the pumping sump. The pumps are equipped with a through-flow regulation. All pumps should have frequency inverters. Level inside of the pumping station is measured with the ultrasonic level meter. Pumping station maximal hydraulic capacity is 26.3 l/s. Storm water flow over 26.3 l/s overflows into the river from pumping station.

Pumping station will be structurally designed for a wastewater flow corresponding of 6,000 PE flow. However. the pumps will be mounted only on the flow rate 26.3 l/s. which correspond to rainfall flow rate of 6,000 PE. Internal recycles will be less than 1% of WWF. Contractor shall propose its solution so that currently prevent sedimentation and sludge layer formation during dry weather flow.

Table 7: Required pumping station capacity

	Start-up capacity	Design capacity
	l/s	l/s
Average Dry Weather Daily Flow - ADF	6.8	10.4
Maximum Dry Weather Daily Flow - MDF	9.5	14.6
Maximum Dry Weather Hourly Flow - MHF	14.2	21.9
Wet Weather Flow - WWF	26.3	26.3

Table 8: Technical data of pumping station

Parameter	Unit	Value
Number of pumps (working + standby) *)	pcs	2+1
Operating range of the pump	%	50 - 100

**) recommended value, this value must be calculated by bidder*

Mechanical wastewater pretreatment

Complete wastewater pre-treatment prevents operational problems. such as blockages. wear and silting. Complete compact equipment consists of fine screens with screenings treatment. grit separation and classification and separation and removal of fat and grease. Required hydraulic capacity of a facility is 26.3 l/s (maximum design capacity). Maximum slot of screen is 6 mm. The screens will be equipped to press of screenings. The estimated production of screenings is calculated by bidder.

The sand trap will achieve the separation of sand from the conveyed wastewater. The estimated production of sand is calculated by bidder.

l 03/12/18

4.1.2. Biological treatment process

Wastewater from mechanical pre-treatment will be flowed into the biological step of WWTP. Wastewater treatment technology is designed as circulating activated sludge process.

4.1.2.1. Circulating Activated Sludge Process

This process is based on a biological principle as low-load activation with a partial aerobic sludge stabilisation. The activation tank is divided into a pre denitrification (anoxic) zone and circulating activated sludge process with intermittent aeration. In the denitrification zone. the raw sewage water is mixed with recirculated sludge from the bottom of secondary sedimentation tank resulting in the formation of activated mixture. Submersion horizontal agitators are used for stirring the activated sludge in the denitrification. The nitrification sections will be aerated by fine-bubble aeration elements. Circulated activated sludge tank is equipped submerged agitators too. From the nitrification section. the activation mixture flows into the secondary sedimentation tanks.

UV filter serves as tertiary treatment - outflow disinfection. Excess activated sludge will be thickened and storage in discontinues aerated tank. Aerobic stabilized excess activated sludge will be dewatered by centrifuge. Chemical precipitation of phosphorus is used to achieve required outflow concentration.

Predenitrification tank

Pre-denitrification tank ensures denitrification of oxidized forms of nitrogen contained in the return sludge. The denitrification tank inlets are mechanically pre-treated waste water and return sludge from the secondary sedimentation tank. Denitrification tank operates in anoxic conditions and is not aerated. It is only mechanically mixed. Mimimal hydraulic contact time must be higher than 1,9 hour during maximal flow rate and maximal flow of return sludge.

Circulating activated sludge tank

The circulating activated sludge facilities will be operated with the presence of oxic and anoxic zones or alternatively with cyclic aeration. This type of aeration tank is very suitable for fluctuating waste water pollution. respectively with gradually increasing quantities of waste water pollution. In case desing capacity must be total sludge age higher than 20 days. Maximal activated sludge concentration will be 5,5 g/l. In case using simultaneous precipitation of phodphorus must be chemical sludge production incorporated into activated sludge production.

The method of operation of the circulatory activation will be included in the offer.

Table 9: Activated Sludge Tanks

		Start up	Design capacity
Predenitrification tank			
Number of tanks *)	pcs.	1	1
Volume of one tank *)	m^3	300	300
Circulating activated sludge tank			
Number of tanks *)	pcs.	1	1

Volume of one tank *)	m^3	1 200	1 200
Intermittent aeration			
Oxic zone - time of aeration *)	hour	2	2
Anoxic zone – no aeration *)	hour	1	1
Activated sludge concentration *)	kg/m^3	4.0	5.5
Volumetric loading *)	kg BOD_5/m^3.day	0.156	0.240
Sludge load *)	kg BOD_5/kg.day	0.039	0.044
Return sludge flow rate *)	l/s	16.0	16.0
Total sludge age *)	day	21	20.0
Production of excess activated sludge including of sludge from chemical precipitation of phosphorus *)	kg/day	287	416
	m^3/day	35.9	37.8
Standard oxygen transfer rate (SOTR) *)	kg O_2/d	821	1 251
Required air flow *)	Nm^3/hour	685	1 042
Time of aeration *)	m^3/day	16	16

**) recommended value, this value must be calculated by bidder*

In case of intermittent aeration must air flow for aeration take into the consideration time of aeration and time of interrupted aerations.

Table 10: Technical data of aeration system

Parameter	Unit	Value
Number of blowers	pcs	1+1
Capacity of blower (Normal air flow rate)*)	Nm^3/hour	1 042
Water depth of diffusers *)	m	4.7
Specific standard oxygen transfer efficiency (SSOTE) *)	%m	5.7

**) recommended value, this value must be calculated by bidder*

Final Settling Tanks

The activated mixture from the circulating activated sludge tank will flow into the final settling tank, where the separation of sludge from the treated wastewater will take place. The wastewater will then be discharged into the recipient – Zeta River. Part of the settled activated sludge will be returned into the biological treatment facility and the remainder pumped to subsequent treatment as part of the sludge management process.

It is proposed to construct circulated final settling tank with parameters (for design inflow parameters):

SS loading per surface area at MHF	less than 6,0 kg/m2.hour
Sludge index	not lower than 150 ml/g
Minimal return sludge flow rate must be	16 l/s

03/12/18

Table 11: Secondary Settling Tank Parameters

		Start up	Design capacity
Number of tanks	pcs.	1	1
Tank diameter – minimal *)	m	12.5	12.5
Depth of tank – minimal *)	m	4	4

**) recommended value, this value must be calculated by bidder*

The removal of the settled sludge and scum can be either with radial bridge scraper or any other adequate functional system.

Return activated sludge pumping station

Return activated sludge pumping station shall consist of two pumps. of which one is operating and one is on standby and they should operate in alternate mode in order to achieve equal number of operating hours. On the pressure pipeline an electromagnetic inductive flow meter must be installed. Both pumps should have frequency inverters. Level inside of the pumping station is measured with the ultrasonic level meter.

Table 12: Technical data for the return activated sludge pumping station

Parameter	unit	value
Number of pumps (working + standby)	pcs	1+1
Maximum flow of pump *)	l/s	16
Operating range of the pump	%	50 - 100

**) recommended value, this value must be calculated by bidder*

Excess sludge pumping station shall consist of two pumps. of which one is operating and one is on standby and they should operate in alternate mode in order to achieve equal number of operating hours. On the pressure pipeline an electromagnetic inductive flow meter must be installed. All pumps should have frequency inverters. Level inside of the pumping station is measured with the ultrasonic level meter.

Table 13: Technical data for the excess sludge pumping station

parameter	unit	value
Number of pumps (working + standby)	pcs	1+1
Maximum flow of pump *)	l/s	5
Operating range of the pump	%	50 - 100

**) recommended value, this value must be calculated by bidder*

Chemical Phosphorus Precipitation

Chemical phosphorus precipitation unit will be added to the treatment process. The precipitation will be achieved through the addition of ferrous sulphate into inlet of the final settling tanks or into the inlet of the activated sludge tanks. The phosphorus precipitation will be simultaneous. Ferric sulphate (40% solution) will be dosed from the container or small ferric sulphate holding tank. Small membrane pump is used to dosing solution of ferric sulphate. Solution of ferrous chloride is possible to use too, but the dose of sodium chloride and ferric sulphate will not be the same.

The precipitant reservoir can be placed outdoors. under the roof. Reservoir is made with double walls due to safety reasons and each equipped with continuous level measurements.

03/12/18

three level switches (minimum. maximum. alarm) suction and discharge connections. Liquid P-precipitant is pumped from the auto cistern to the reservoirs by means of two chemical resistant pumps with the capacity of 15 m3/h (one in operation. second on standby). The flow of the P-precipitant is measured with electromagnetic inductive flow meter. Dosing of the P-precipitant will be in regards to the flow to the biological units.

Table 14: Technical data for the P-precipitant storage

parameter	unit	value
minimum reservoir volume *)	m^3	12
minimum number of reservoirs	pcs	1
minimum number of dosing pumps	pcs	1+1
Maximal dosing pump capacity *)	l/hour	7.0

**) recommended value, this value must be calculated by bidder*

UV disinfection of outflow

UV radiation in the on going process wastewater appears as microbiologically effective. certain technical and cost-saving way to reduce germs. The practice can be achieved by reducing the amount of UV radiation germs up to several orders of magnitude. The advantages of UV disinfection are many. including:

- immediate and reliable disposal of bacterial cultures without addition of chemicals
- photochemical reduction of undesirable substances
- no formation of THM or AOX
- no undesirable by-products
- no adverse taste or odour effects of the treated water
- no storage or dosing of disinfectant chemicals
- effectiveness of UV disinfection is dependent on the pH value of treated water
- needs no special reaction vessel or the corresponding time delay
- minimum space requirements of UV technology
- low investment and operating costs and high operational reliability and performance

The decisive criterion for the effectiveness of UV radiation is applied to determine the minimum dose for a given operating condition in the medium disinfected. The dose is defined as the product of intensity and duration of radiation exposure and gives in mJ/cm2. The minimum dose of UV light is 30 mJ/cm2 according to the type of media. Obviously dose is about 40 mJ/cm2 (400 J/m2).

The system is equipped with automatic wipers tubes UV emitters with long life lamp.

4.1.3. Sludge Treatment

The WWTP Danilovgrad sludge treatment facility will treat excess activated sludge and chemical sludge (after the incorporation of chemical phosphorus precipitation). which will be pumped from the system together with activated sludge. The estimated production of sand

03/12/18

provides bidders. The production of excess activated sludge must include sludge from chemical precipitation of phosphorus.

4.1.3.1. Sludge management - aerobic stabilisation of the excess sludge

An aerated tank will be used for the sludge stabilisation. The period of sludge accumulation in aerobic condition will guarantee a sufficient stabilisation of the sludge. Excess sludge is pumped from the return sludge pipe to the aerated excess sludge stabilization tank. The excess sludge is thickened by sedimentation and decantation during the interruption of aeration in the sludge stabilization tank. Before each sludge discharge from sludge activation tank. the aeration in tank of sludge stabilization is stopped. the sludge settling and thickening is (about 3-4 hours). Sludge storage tank must have aeration system for additional sludge stabilization. ultrasonic level measurement. emergency overflow. three level switches minimum. maximum. alarm). a manual and an electromotor knife gate valve for emptying to the dewatering.

Afterwards. the submersion pump will pump the sludge water back to the treatment process and the sludge pump will be discharged excess sludge from the return sludge pipes. The aerobic stabilisation of sludge will assure a totally smell-free operation of the sewage water treatment plant. The stocked condensed sludge (approximately 2 - 3%) will be de-watered with help of polymer flocculation agent in a centrifuge device and brought away for the agricultural exploitation (it is aerobe stabilised). Stabilised sludge holding tank is used for equalizing sludge before its dewatering.

Table 15: Circulating activated sludge tank - balance of excess sludge

		Start up	Design capacity
Capacity of the treatment plant	PE	3 900	6 000
Volume of the aerobic stabilisation excess sludge tank *)	m^3	350	350
Production of excessive sludge *)	kg/d	287	416
	m^3/day	26.1	37.8
Loss of mass by sludge stabilization *)	%	10	10
Quantity of stabilised sludge *)	kg/d	258.3	374.4
Concentration of stabilised sludge *)	%	2.5	2.5
Volume of aerobically stabilized sludge *)	m^3/d	10.3	15
Hydraulic retention time *)	days	33.9	23.4
Blower capacity *)	Nm^3/hour	550	550

**) recommended value, this value must be calculated by bidder*

4.1.3.2. Excess sludge thickening

Mixture of excess activated sludge and sludge from chemical precipitation of phosphorus is aerobically stabilized in a separate tank. Aerobic stabilization tank is intermittently aerated. Thickening of aerobic stabilized sludge takes place by the sedimentation way during aeration shutdown. Offset water from the tank is then discarded.

03/12/18

4.1.3.3. Aerobic stabilised sludge holding tank

Aerobically stabilized sludge is accumulated in a mechanically mixed holding tank. Minimal volume of tank is 60 m3.The tank's capacity must be sufficient to hold a 4 days production of thickened sludge. Aerobically stabilized sludge is pumped from a storage tank for sludge dewatering.

4.1.3.4. Sludge Dewatering

The produced aerobically stabilized sludge will be dewatered using a centrifuge. During Stage I. only the stored sludge will be dewatered. The centrifuge will be preceded by a mixing tank with an approximate volume of 60 m3.

Table 16: Dewatering of aerobic stabilised sludge

		Start up	Design capacity
Mass of aerobically stabilized sludge *)	kg/day	258.3	374.4
Volume of aerobically stabilized sludge *)	m^3/day	10.3	15.0
Volume of sludge for 5 days operation of dewatering	m^3/day	14.5	21.0
Flocculent dosing – maximal value *)	kg/t	10	10
Flocculent consumption *)	kg/day	2.58	3.74
	kg/year	943	1 367
Dewatered sludge dried solid content	%	25	25
Balance of dewatered sludge *)	kg/day	1 033	1 497,5
	t/year	377,1	546,6

**) recommended value, this value must be calculated by bidder*

Sludge from the sludge storage tanks is pumped with two progressing cavity pumps. of which one is operating and one is on standby and they should operate in alternate mode in order to achieve equal number of operating hours. All pumps and motors of the centrifuge should have frequency inverters. Pipeline to the centrifuge must be equipped with a flow meter. Design of centrifuge:

Weekly operation time	5 days
Daily operation time (including start and washing of the centrifuge)	5 hours
Minimum final dry matter content (only with polyelectrolyte adding)	25 %

Table 17: Technical data for the sludge dewatering

Parameter	unit	value
Daily sludge production *)	kg/d	374.4
Daily sludge production *)	m^3/d	15.0

03/12/18

Weekly operation time	d	5
Daily sludge production (operation time 5 days per week) *)	kg/d	524.1
Daily sludge production (operation time 5 days per week) *)	m^3/d	21.0
Daily operation time (including start and washing of the centrifuge)	h	5
Minimum number of centrifuges	-	1
Flow of centrifuge appr.*)	m^3/h	5
Maximal dry solid amount *)	kg/h	135
Minimum final dry matter content (only with polyelectrolyte adding)	%	25
Sludge feeding pump capacity *)	m^3/h	2 - 6
Minimum number of sludge feeding pumps	-	1+1
Number of dewatered sludge containers *)	-	2
Volume of the container *)	m^3	4

**) recommended value, this value must be calculated by bidder*

The dewatered sludge will be transported for further treatment

4.1.4. Common requirements of WWTP

Treatment technology has except sludge management and mechanical pretreatment of waste water requirements for additional devices. such as alternative source of electricity. service water preparation. analytical monitoring of wastewater treatment process etc.

4.1.4.1. Required technological dimensioning of the plant

Dimensioning of the primary + secondary + tertiary treatment at the WWTP Danilovgrad shall be conducted in accordance with the ATV-DVWK standards (ATV-DVWK-A 131 E standard. May 2000) for dimensioning of single-stage plants with active sludge.

The offer must include a calculation of the main technological volumes, determination of sludge production and design of chemical precipitation of phosphorus and other technological parameters. The calculation will be carried out according to the Directive ATV-DVWK-A 131. On the basis of own calculation, bidder guarantees the technological treatment process and the required effluent quality.

The following specification is the minimum requirement. The Tender must include all the necessary equipment and accessories for normal and safe operation. This includes fastening, support, anchoring and sealing material, grids, railings, weirs, brackets, guiding tubes, chains, steel rope wires, winches, servicing rails, lifting equipment, ladders, cage ladders, platforms, trolleys..., all made in accordance with general requirements.

03/12/18

4.1.4.2. Diesel generator

Diesel generator is requested as a substitute to power supply. Diesel generator will be supply electric power for WWTP operation at the time of power outage. Sludge management will not be supplied with electricity from diesel generator.

4.1.4.3. Service water preparation

Treated waste water. defined as service water. should be used as wash water for the equipment such as coarse and fine screens. spiral conveyers. spiral presses. centrifuge etc. After the effluent measuring shaft single vane impeller submersible pumps pump water through two automatic in-line filters (maximum 50 micrometres). installed with all the necessary fitting and valves. into the reservoir. made of PP. equipped with overflow. cover. automatic supplemental filling with potable water. continuous level measurement and three level switches. placed inside the structure for service water preparation. A set with two pressure boosting pumps and expansion vessel raises the pressure. which is necessary for the washing of individual equipment (approximately 5 bar).

4.1.4.4. Influent and effluent waste water monitoring

The operator must ensure sampling of inflowed wastewater. treated waste water. concentration of mixed liquor etc. Samples must be analyzed by an accredited laboratory. The number of the samples is minimal 1 times monthly. During the start-up of WWTP operation we recommended to make samples analyses weekly.

Sampling profiles:

- Inflowed wastewater – pH, COD, BOD5, SS, VSS, NKj, Ptot
- Treated wastewater – pH, COD, BOD5, SS, VSS, Ntot, N-NH4, N-NO3, Ptot
- Mixed liquor in activated basin – Imhoff, SS, VSS
- Return and excess sludge – SS, VSS
- Stabilized sludge – SS,VSS
- Dewatered sludge - TS, VTS, SS, VSS

Flow measurement:

- Outflow of treated water
- Return sludge
- Excess sludge
- Flow to the sludge dewatering
- Dose of phosphorus precipitation agent
- Dose of solution of organic flocculant

Installation of online analysers is not proposed.

l 03/12/18

4.1.4.5. Waste water sludge monitoring

Sludge is the result of treatment and is directly in the function of treatment level and technology. The quality of sludge should be analysed regularly to prevent possible hazardous impacts on the environment. Sludge should be managed in accordance with the regulations „PRAVILNIK o bližim uslovima koje treba da ispunjava komunalni kanalizacioni mulj. količine. obim. učestalost i metode analize komunalnog kanalizacionog mulja za dozvoljene namjene i uslove koje treba da ispunjava zemljište planirano za njegovu primjenu", "Official Gazette no. 89/09 of 31 December 2009".

The monitoring programme involves the following indicators:

- Quantities of the processed sludge;
- Mass of dry substance;
- Concentration of total N (mg/kg DS.);
- Concentration of total P (mg/kg DS);
- Concentration of total K (mg/kg DS);
- Concentration of Cd (mg/kg DS);
- Concentration of Pb (mg/kg DS);
- Concentration of Cr (mg/kg DS);
- Concentration of Zn (mg/kg DS);
- Concentration of hazardous organic substances (PCB,. HCH, etc.) (µg/kg DS)

4.1.5. Disposal of sewage sludge

Requirements for sewage sludge disposal are described in Sl. List CG 89/2009 from 31.12.2009. The Regulation. which specifies the use of sludge is called "Pravilnik o bližim uslovima koje treba da ispunjava komunalni kanalizacioni mulj. količine. obim. učestalost i metode analize komunalnog kanalizacionog mulja za dozvoljene namjene i uslovima koje treba da ispunjava zemljište planirano za njegovu primjenu". Variants of utilization sludge are included in Article 7 of Regulation. There are three possibilities of disposal of stabilized sewage sludge as follows:

1. Treated municipal sewage sludge can be used in agriculture for the purposes stipulated by the Law on Waste Management if:
   - dewatered stabilized sludge meets the quality A or B from point b of Annex 1 of this Regulation;
   - it contains heavy metals which annually does not exceed the amount referred to in point c of Annex 1 of this Regulation. unless the content of nitrogen and phosphorus in the soil is not a limiting factor ;
   - total amount of nitrogen entered with the application of treated sewage sludge does not exceed 250 kg / ha per year . or 170 kg / ha per year if treated sewage sludge is applied to the soil vulnerable to nitrates and meets the optimal needs of crops ;

03/12/18

- meets the percentage of dry substance from the point b of Annex 1 of this Regulation .
- if the land on which it is applied meets the quality from point a of Annex 1 of this Regulation.

2. Treated municipal sewage sludge is used on the green areas in parks if:
   - meets the minimum quality B from point b of Annex 1 of this Regulation; meets the percentage of dry substance from the point b of Annex 1 of this Regulation;
   - If the land on which it is applied meets the quality from point a of Annex 1 of this Regulation.
3. Treated municipal sewage sludge is used for land re-cultivation in landfills. tailings and mining areas if:
   - meets the minimum quality C from point b of Annex 1 of this Regulation;
   - meets the percentage of dry substance from the point B of Annex 1 of this Regulation.

At present. WWTP Danilivgrad not exist. therefore we do not know the quality of its sludge. We also do not know soil composition in field. where will be applied dewatered sludge.

In Danilovgrad is not industry. therefore we do not expect the production of highly contaminated sewage sludge. Therefore. we expect the maximum sludge contamination by point C. according point b. Annex 1 of the Regulation.

Due to the uncertain composition of sludge (sludge do not exsist). we propose to use stabilized and dewatered sludge from WWTP Danilovgrad for reclamation of landfill. It is necessary to dewatered sludge to minimal concentration 25% of dry matter.

ANNEX 1 of Regulation

a) Limit values for concentrations of heavy metals in the soil on which they are used TREATED MUNICIPAL SEWAGE SLUDGE

Heavy metals	allowed content of heavy metals in soil are expressed in mg / kg dry matter of a representative soil sample		
pH soil u 1 M dilution KCl-a	5.0 <pH 6.0	6.0<pH<7.0	pH>7.0
Zn	100	150	200
Cu	40	50	100
Cr	50	75	100
Pb	50	70	100
Ni	30	50	70
Cd	0.5	1	1.5
Hg	0.2	0.5	1

03/12/18

b) LIMIT VALUES FOR CONCENTRATIONS OF HEAVY METALS AND ORGANIC POLLUTANTS. THE CONTENT OF PATHOGENIC ORGANISMS AND DRY MATTER CONTENT IN THE PROCESSED MUNICIPAL SEWAGE SLUDGE THAT IS USED

1. Allowable heavy metal content is expressed in mg / kg dry matter of the sample treated municipal sewage sludge quality A. B and C

Heavy metals	quality (Q)		
	A	B	C
Zn	600	1200	2500
Cu	300	600	1000
Cr	100	250	1000
Pb	120	200	750
Ni	60	100	300
Cd	5	10	20
Hg	5	10	16

2. The allowed content of organic pollutants in treated municipal sewage sludge quality A and B

ORGANIC COMPOUNDS	allowable concentrations (mg / kg dry matter)
PAH (policiklični aromatični ugljovodonici)	6
PCB (polihlorni bifenili)	0.2-0.8*

*0.2 for agriculture. 0.2-0.8 for green areas in parks

3. Pathogens organisms

Treated municipal sewage sludge quality A and B does not contain pathogenic organisms

.4. The percentage of dry matter in the sludge

Plants for water treatment products processed municipal sewage sludge with a minimum percentage of 25% DM (dry matter) suitable for further processing to achieve:

- 50% SM for use in agriculture. the green areas in parks;
- 35% SM for use as a covering layer in landfills or landfill reclamation. barren land and mining areas.

Sewage sludge with 25% DM is used on the land only if the sewage sludge can be applied mechanically (ie by using fertilizer or in the case of soil remediation. using bulldozers and similar equipment) and process immediately enter into the soil.

c) Limit values for amounts of heavy metals ANNUAL CAN ADD THE LAND ON WHICH APPLIES TREATED MUNICIPAL SEWAGE SLUDGE QUALITY AIB. based on the 10-year average (kg / ha / year)

03/12/18

parametric	The limit values
Zn	30
Cu	12
Cr	-
Pb	15
Ni	3
Cd	0.15
Hg	0.1

Maximum allowable amount treated municipal sewage sludge which can be applied to the soil depends on the following parameters: percentage of available nitrogen in the sludge. the concentration of heavy metals in the sludge and in the soil. the percentage of dry matter in the sludge. Sludge type and soil type.

4.2. PARTICULAR REQUIREMENTS – CIVIL PART

4.2.1. Current situation

Currently, wastewaters are drained directly into the Zeta river. The town of Danilovgrad has no wastewater treatment plant. Separate sewer systems exist in individual parts of the town. Sewage water is discharged into the river in several places.

4.2.2. WWTP location

The Danilovgrad WWTP shall be located in a meander of the Zeta river, northeast of the town centre. Currently, areas in the meander are used as pastures and fields. The riverbanks are covered with trees and bushes. The plots in question are accessible along an unpaved road running through the middle of the whole meander. The maximum area assumed to be used for the WWTP construction is 9,600 m^2. Plots for the WWTP construction shall be provided by the Employer. Costs of the purchase or lease of the plots concerned shall be covered by the Employer. The minimum protection zone of the WWTP from buildings shall be 150 m. All important WWTP structures and equipment must be protected against a hundred-year flood.

Prior to the design works commencement, detailed engineering-geological and hydro-geological surveys shall be performed. A high groundwater level is expected. Structures and tanks must be protected against flooding at increased water level occurrence and when the tanks are empty.

4.2.3. Design and construction conception

The WWTP shall be designed as unattended with fully automatic operation.

03/12/18

The WWTP is designed to be divided into three basic units: coarse and fine mechanical pre-treatment, biological treatment, and sludge treatment.

The coarse mechanical pre-treatment and sludge treatment shall be designed as a single-line system. The fine mechanical pre-treatment and biological treatment shall be designed as a double-line system, i.e. one separate line for the capacity of 6,000 PE shall be designed and constructed for Stage 1 and another, identical, line for the capacity of 6,000 PE shall be designed for Stage 2 (12,000 PE in total). The design must "consider the fact that the WWTP will be constructed in two stages. All structures and equipment constructed within Stage 1 must be fully utilisable for the construction of stage 2. The spatial arrangement of the structures and equipment must allow trouble-free construction of structures and installation of equipment within Stage 2. The biological treatment design must take into account the following operation requirements:

Rules for Stage 1

- One separate line shall be constructed within Stage 1.
- A bypass of pre-denitrification tank, circulated activated sludge tank, and final settling tank structures shall be constructed to allow temporary shutdown of the structures.
- Trouble-free construction and connection of the second line without a shutdown shall be allowed.

Rules for Stage 2

- One separate line shall be constructed within Stage 2.
- Trouble-free construction and connection of the second line without a shutdown shall be allowed.
- Equal division of wastewaters into two lines shall be ensured.
- The bypass of the pre-denitrification tank, circulated activated sludge tank, and final settling tank structures shall be maintained.
- The design shall allow cross-connection of structures of the first and second biological lines (pre-denitrification tank, circulated activated sludge tank, and final settling tank). This will ensure high variability of operation and possible shutdowns of either biological line without treatment parameters being worsened.

The design of the WWTP spatial arrangement shall take into consideration the territorial (areal) reserve for the future extension of the WWTP for the capacity of 18,000 PE (Stage 3).

All building structures, constructions, and tanks shall be designed and with the minimum lifetime of 50 years. Therefore, concrete of corresponding classes and other construction materials with corresponding lifetime shall be used. All concrete and reinforced-concrete structures in contact with wastewater must be water-resistant and resistant to chemical effects. Concrete used in exterior must be frost-resistant. The types of concrete and their protection shall be specified upon the engineering-geological and hydro-geological surveys and soil and groundwater aggressiveness results. Construction and dilatation joints between individual sections of structures shall be waterproof.

03/12/18

The foundation of structures, including the foundation bottom draining, underbed layers design, and sheeting of excavation pits for tanks and buildings, shall be designed upon the results of the engineering-geological and hydro-geological surveys.

Seismic activities occurring in the area shall be considered in the designing of structures.

4.2.4. Description of individual structures

Dimensions and other parameters of structures designed must be based on the required WWTP process parameters. Occupational health and safety shall be ensured in all structures and facilities. Safe access must be provided to all spaces for carrying out revisions, cleaning, repairs, and other work related to the WWTP operation.

The "tank capacity" always describes the hydraulic capacity, i.e. the volume of water in the tank.

Thin-walled steel elements, such as railings, grates, grate frames, ladders, etc., located in exterior or above water level shall be made of stainless steel of the required quality, or of composite materials.

Thick-walled steel elements, such as girders, thick-walled pipes, etc., located in exterior or above water level shall be hot-dip galvanised or provided with a high-quality coating.

Steel covers shall me made of stainless steel of the required quality or hot-dip galvanised, or of composite materials.

4.2.4.1. Overflow/closing chamber

The connecting structure on the border of the design sewerage and the WWTP shall be a sewer shaft located in a place with coordinates X = 6 591 573.20; Y = 4 712 845.64, with the estimated relative depth of the level line 3.5 m below the existing formation level. From there, the connecting piping shall run into the overflow/closing chamber.

This structure shall be designed as an overflow structure with either front or side overflow which will allow diversion of rainwater discharges exceeding 130.0 L/sec through the WWTP bypass and outfall piping to the Zeta river. The structure shall include a valve for regulating the flow or closing the WWTP inflow completely. Further, the structure shall include coarse screens and scumboard to prevent coarse impurities, floating substances, oil substances, and fats from entering the river or the rainwater mechanical treatment equipment on the overflow.

The structure shall be designed as an open, reinforced-concrete monolithic structure made of water-resistant concrete. It shall include locksmith's products (railings, grates, ladders).

4.2.4.2. Gravel trap

The structure shall serve for trapping coarse impurities pushed along the bottom or carried above the bottom of the inflow sewer. It shall be designed for the maximum WWTP inflow including rainwater. It will serve as protection of subsequent equipment and machinery. The building part shall allow the installation of machinery for the deposited material collection. This material shall be transferred directly to a container. The structure shall include a

1 03/12/18

draining area of the container. Trouble-free handling of the container must be ensured. The container removal shall be carried out with a truck.

The structure shall be designed as a reinforced-concrete monolithic structure made of water-resistant concrete in the shape of a trough with a depression. The depression bottom shall be protected along its whole height with sheet steel. The hard-surface area for the container shall be made of concrete, drained to the internal sewage system. The machinery for the deposited material collection shall have a concrete foundation. The structure shall include locksmith's products (railings, grates).

4.2.4.3. Coarse screen

The designed structure shall protect pumps by collecting coarse impurities. The pore width will depend on the type of the pumps designed for the pumping station. The structure shall be designed for the maximum WWTP inflow including rainwater. The building part shall allow the installation of screen machinery with automatic removal of collected impurities. Impurities shall be automatically transferred to a container. The structure shall include a draining area of the container. Trouble-free handling of the container must be ensured. The container removal shall be carried out with a truck.

The structure shall be designed as a reinforced-concrete monolithic structure made of water-resistant concrete in the shape of a channel. The hard-surface area for the container shall be made of concrete, drained to the internal sewage system. The structure shall include locksmith's products (railings, grates, shelter above the screen).

4.2.4.4. Sewage collection tank

The structure shall serve for collecting sewage from septic trucks collected from cesspits and septic tanks. The building part shall include a water-resistant, covered collection tank of required capacity. The tank shall be filled only through an automatic station for receiving sewage waters, appropriately equipped for measuring pH, conductivity, and temperature, and for automatic sampling. Tank emptying shall be controlled automatically. The tank runoff shall empty before the gravel trap and coarse screen; the whole content of the tank shall be designed to be discharged by gravity. The tank shall include a stirrer for homogenizing the content, valve for discharging the tank content, and ultrasound probe. A stirrer hoisting mechanism, valve control stand, and automatic station for receiving sewage water shall be located on the tank ceiling. The building part shall allow the installation of machinery. The tank shall be accessible for septic trucks.

The structure shall be designed with parameters sufficient also for the planned scope of Stage 2.

The structure shall be designed as a closed, reinforced-concrete monolithic structure made of water-resistant concrete. The structure shall include locksmith's products (lids, step irons, handles).

4.2.4.5. Pumping station with overflow

The structure shall serve for pumping wastewater to the fine mechanical pre-treatment and biological treatment in the maximum quantity of 26.3 L/sec in Stage 1 (6,000 PE) and of 52.6

03/12/18

L/sec in Stage 2 (12,000 PE). Discharges exceeding the maximum pumped quantity shall be diverted (overflowing) through the WWTP bypass and outfall piping to the Zeta river.

Structurally and technologically, the structure shall be prepared for Stage 1 and it shall allow pumps to be installed as required by the manufacturer. The pumping station shall be water-resistant. The wastewater pumped shall be distributed to two separate lines for Stage 2. Trouble-free construction and connection of the pumping station for Stage 2 without a shutdown shall be allowed.

Further, the structure shall include a scumboard to prevent floating substances, oil substances, and fats from entering the river or the rainwater mechanical treatment equipment on the overflow.

The structure shall be designed as a closed, reinforced-concrete monolithic structure (chamber) made of water-resistant concrete. The structure shall include locksmith's products (lids, ladders, handles).

4.2.4.6. Fine mechanical pre-treatment

A double-line arrangement of the structure is designed; one separate unit shall be installed within Stage 1 (6,000 PE). Another, identical, unit shall be installed within Stage 2.

A compact unit shall be designed for each line, consisting of a rotary fine screen, aerated gravel trap, and floating impurities (fats) trap. The unit shall be designed for the maximum flow of 26.3 L/sec. Screenings shall be collected and removed, together with fats, by a conveyor with an integrated press. Organic impurities shall be washed from trapped sand; the sand shall be removed by a conveyor to a separate container. Air shall be supplied by an integrated compressor. The unit operation shall be fully automatic, with personnel required only for occasional emptying of the container. Trouble-free handling of the container must be ensured. The container removal shall be carried out with a truck.

The structure shall be designed as a reinforced-concrete monolithic slab (foundation) made of water-resistant concrete. The hard-surface area for the container shall be made of concrete, drained to the internal sewage system. The structure shall include a reinforced-concrete valve chamber on the bypass piping, and locksmith's products (shelter).

4.2.4.7. Flow distribution structures

Structures for equal distribution of wastewater to two separate lines of the biological treatment shall be designed. The wastewater shall be distributed by gravity, with a perfect overflow including an adjustable overflow crest. The structures shall include valves. Tanks in both lines (pre-denitrification tank, circulated activated sludge tank and final settling tank) of the biological treatment shall be cross-connected. Emergency bypass of the tanks shall be provided as well.

The structures shall be designed as reinforced-concrete monolithic structures made of water-resistant concrete with a central cylinder and partition walls. The structure shall include locksmith's products (railings, grates, ladders).

03/12/18

4.2.4.8. Pre-denitrification tanks

Two separate, identical denitrification tanks shall be designed. One tank shall be realised within Stage 1. The following description applies to one tank. Return sludge from the final settling tank shall be dosed into this tank. The tank shall be mechanically stirred and its construction must allow the installation of stirrers specified by the manufacturer. An overflow crest shall be designed on the runoff, allowing even discharge of wastewater to the circulating activation.

The structure shall be designed as a reinforced-concrete monolithic tank made of water-resistant concrete. The structure shall include locksmith's products (railings, stairs, ladders).

Assumed tank parameters	Stage 1 1 line – 6,000 PE	Stage 2 2 lines – 12,000 PE
Pre-denitrification tank		
Number of tanks	1 tank	2 tanks
Tank capacity *)	300 m3	600 m3
Tank water depth *)	5 m	5 m
Tank surface area *)	60.0 m2	120.0 m2

**) recommended value, this value must be calculated by bidder*

4.2.4.9. Circulating activated sludge tanks

Two separate, identical circulating activated sludge tanks shall be designed. One tank shall be realised within Stage 1. The following description applies to one tank. The tank shall be mechanically stirred and aerated, and its construction must allow the installation, operation, and maintenance of machinery required by the technology used and the manufacturer. The shape of the tank and inner partition walls shall be adapted to the most favourable hydraulic water flow. A runoff shaft with an overflow crest (window) shall be designed on the runoff, allowing even discharge of the activated mixture to the final settling tanks.

The structure shall be designed as a reinforced-concrete monolithic tank made of water-resistant concrete, including reinforced-concrete walkways and beams. The structure shall include locksmith's products (railings, grates, stairs, ladders).

Assumed tank parameters	Stage 1 1 line – 6,000 PE	Stage 2 2 lines – 12,000 PE
Circulating activation		
Number of tanks	1 tank	2 tanks
Tank capacity *)	1,200 m3	2,400 m3
Water depth in the tank *)	5 m	5 m
Tank surface area *)	240 m2	480 m2
Number of tanks	1 tank	2 tanks
Corridor width *)	5 m	5 m
Water depth *)	5 m	5 m

03/12/18

Total width (excl. walls) *)	10 m	10 m
Length of straight part of the tank *)	16.15 m	16.15 m
Total length of the tank *)	26.15 m	26.15 m

**) recommended value, this value must be calculated by bidder*

4.2.4.10. Final settling tanks

Two separate, identical final settling tanks shall be designed. One tank shall be realised within Stage 1. The following description applies to one tank. A circular tank shall be designed for the activated sludge separation. Water shall flow into the tank through a flow distribution structure to the centre of the tank. Settled water shall be collected in a discharge gutter with an adjustable overflow crest, located around the tank perimeter. Then it shall run off through the window of the runoff shaft to the UV outflow disinfection structure. The tank construction must allow the installation of machinery for automatic raking of the bottom and the water level. The collection of floating impurities and their discharge to the WWTP sewerage shall be provided. Settled sludge shall be collected in the central tank from where it shall be removed through piping to the sludge pumping station.

The structure shall be designed as a reinforced-concrete monolithic tank made of water-resistant concrete. The structure shall include locksmith's products (grates).

Assumed tank parameters	Stage 1 1 line – 6,000 PE	Stage 2 2 lines – 12,000 PE
Final settling tank		
Number of tanks	1 tank	2 tanks
Tank diameter *)	12.5 m	12.5 m
Average water depth in the tank *)	4 m	4 m
Tank surface area *)	122.7 m2	245.3 m2
Tank capacity *)	491 m3	982 m3
Return sludge *)	16 L/sec	2 x 16 L/sec

**) recommended value, this value must be calculated by bidder*

4.2.4.11. UV outflow disinfection structure

The structure shall be designed as a single-storey building with a saddle roof. The structure shall include two reinforced-concrete channels in which two separate UV disinfection units shall be installed. Even distribution of treated water to two channels shall be ensured for Stage 2; as well as a shutdown of either of the two corridors. The whole structure is designed to be built and one unit installed within Stage 1. A space behind the UV outflow disinfection shall be reserved for automatic sampling from the channels, or for other measuring devices.

4.2.4.12. Measuring flumes

At least two flow measuring structures are designed to be installed. One measuring flume shall be installed on the storm-water overflow piping behind the overflow/closing chamber, or behind the overflow station. The other measuring flume shall be installed on the treated

03/12/18

water runoff at the end of the process. Parshall measuring flumes are recommended to be used due to their reliability and a wide range of flow rate.

The structure shall be designed as an open, reinforced-concrete flume made of water-resistance concrete, in which the measuring profile shall be installed. The structure shall include locksmith's products (railings, step irons).

4.2.4.13. Return and excess activated sludge pumping station

A building structure containing pumps for return and excess activated sludge shall be designed. The structure should be located close to the final settling tanks. One pumping station is designed to be used for both final settling tanks. Structurally, the structure built within Stage 1 shall be prepared also for Stage 2, technologically only for Stage 1.

The structure shall be designed as a single-storey building with a saddle roof, with an underground section containing the sludge machinery-room and two sludge sumps. The aboveground section of the building shall contain the upper part of the sludge machinery-room (connected to the lower part in a ceiling-less space). A switch room shall be located in a separate aboveground section of the building.

The underground sludge sumps, underground parts of rooms and foundations, foundations for technological equipment, cable troughs, supporting floor slabs, and other supporting concrete parts of the aboveground section are designed to be made of reinforced-concrete. The upper section ceiling shall be designed either from standard reinforced-concrete prefabricated hollow panels or in the form of a monolithic reinforced-concrete structure. The sludge sumps shall be covered with a monolithic reinforced-concrete ceiling slab.

The walls shall be built either from perforated bricks of a complete bricklaying system or from a material of similar properties.

The roof supporting structure shall be formed by a system of wooden prefabricated truss girders with longitudinal wind bracing, or by another structure of suitable properties.

Standard internal plaster, lime-cement external plaster; industrial-grade, epoxy-based poured floor or cement grout with a dust-prevention coating; walls provided with industrial ceramic cladding; plastic windows, steel doors.

The structure shall include locksmith's products (railings, lids, covers, walkways, stairs, girders, etc.).

4.2.4.14. Dosing of phosphorus precipitant

The building structure includes a foundation slab for the precipitant tank and offtake point. The tank shall be included in the technology delivery. The area under the tank must be provided with a leakage basin.

The structure shall be designed with parameters sufficient also for the planned scope of Stage 2.

The structure shall be designed as a reinforced-concrete monolithic slab (foundation) made of water-resistant concrete. The structure shall include locksmith's products (grade).

03/12/18

4.2.4.15. Blower house

The structure, in which blowers of circulating tanks are to be placed, shall be designed as a single-storey building with a saddle roof. The building must ensure safe operation and maintenance of the blowers. It shall be divided into a blower room and a switch room. The building shall be fitted with equipment for handling the blowers (their assembly and disassembly). The air intake shall be located on the northern part of the building. The blower room shall be clad with noise insulation to prevent the maximum permissible noise level from being exceeded at the WWTP premise border. A heating/cooling system shall be designed in the building to allow the operation at extreme temperatures and at the maximum loading of the blowers.

Structurally, the structure built within Stage 1 shall be prepared also for Stage 2, technologically only for Stage 1.

Building foundations, foundations for technological equipment, cable troughs, supporting floor slabs, and other supporting concrete parts of the building shall be made of reinforced-concrete. The ceiling shall be designed either from standard reinforced-concrete prefabricated hollow panels or in the form of a monolithic reinforced-concrete structure.

The walls shall be built either from perforated bricks of a complete bricklaying system or from a material of similar properties.

The roof supporting structure shall be formed by a system of wooden prefabricated truss girders with longitudinal wind bracing, or by another structure of suitable properties.

Standard internal plaster, lime-cement external plaster; reinforced-concrete floor with mineral filling and dust-prevention coating; plastic windows, steel doors.

The structure shall include locksmith's products (lids, covers, etc.).

4.2.4.16. Operation building

The structure shall be designed as a single-storey building with a saddle roof. It shall serve as the control and administrative building, providing facilities for the total of 11 persons. The building shall contain a control room with a view of the WWTP structures, office, meeting room, clean and dirty changing rooms, daytime room, washroom and toilet, and a room for handling samples with basic laboratory equipment. The building shall be thermally insulated with residential rooms heated to the min. of 20 °C, or according to valid regulations.

The structure shall be designed with parameters sufficient also for the planned scope of Stage 2.

Foundations, supporting floor slabs, and other supporting concrete parts of the structure shall be made of reinforced-concrete. The ceiling shall be made either from standard reinforced-concrete prefabricated hollow panels or in the form of a monolithic reinforced-concrete structure.

The walls shall be built either from perforated bricks of a complete bricklaying system or from a material of similar properties.

03/12/18

The roof supporting structure shall be formed by a system of wooden prefabricated truss girders with longitudinal wind bracing, or by another structure of suitable properties.

Standard internal plaster, lime-cement external plaster; floors with industrial ceramic skid-proof tiles or PVC; walls with ceramic cladding; plastic windows, steel doors.

The structure shall include locksmith's products (lids, covers, etc.).

4.2.4.17. Garage

The structure shall be designed as a single-storey building with a saddle roof. The building shall provide parking space for one truck, two passenger cars and separate location of mobile backup power supply including the necessary equipment. The building shall be heated to the min. of 5 °C, or according to valid regulations.

The structure shall be designed with parameters sufficient also for the planned scope of Stage 2.

Foundations, supporting floor slabs, and other supporting concrete parts of the structure shall be made of reinforced-concrete. The ceiling shall be made either from standard reinforced-concrete prefabricated hollow panels or in the form of a monolithic reinforced-concrete structure.

The walls shall be built either from perforated bricks of a complete bricklaying system or from a material of similar properties.

The roof supporting structure shall be formed by a system of wooden prefabricated truss girders with longitudinal wind bracing, or by another structure of suitable properties.

Standard internal plaster, lime-cement external plaster; mesh-reinforced concrete floors with filling, resistant against abrasion, mechanical damages and dustiness; plastic windows, steel doors; automatic, electrically-driven sectional garage doors with thermal insulation and integrated openings.

The structure shall include locksmith's products (ventilation grilles, etc.).

4.2.4.18. Warehouse

The structure shall be designed as a single-storey building with a saddle roof. The building shall provide safe storage of tools, machines, and material used for the WWTP operation, repairs, and maintenance. The net storage area must correspond to the minimum requirements and must be kept dry and clean. The warehouse shall include a space for storing acids and alkalis. The building shall be thermally insulated, ventilated, and heated to the min. of 10 °C, or according to valid regulations.

The structure shall be designed with parameters sufficient also for the planned scope of Stage 2.

Foundations, supporting floor slabs, and other supporting concrete parts of the structure shall be made of reinforced-concrete. The ceiling shall be made either from standard reinforced-concrete prefabricated hollow panels or in the form of a monolithic reinforced-concrete structure.

03/12/18

The walls shall be built either from perforated bricks of a complete bricklaying system or from a material of similar properties.

The roof supporting structure shall be formed by a system of wooden prefabricated truss girders with longitudinal wind bracing, or by another structure of suitable properties.

Standard internal plaster, lime-cement external plaster; floors with industrial ceramic skid-proof tiles; walls with ceramic cladding; plastic windows, steel doors.

The structure shall include locksmith's products (lids, covers, etc.).

4.2.4.19. Aerobic stabilisation of excess sludge

The structure shall consist of two parts: a reserve tank for sludge stabilisation and a machinery-room.

Aerobic stabilisation of excess sludge takes place in the reserve tank. The tank shape must enable its content to be stirred, a cylindrical shape is recommended. The tank shall be insulated.

The structure shall be designed with parameters sufficient also for the planned scope of Stage 2.

The structure shall be designed as a reinforced-concrete monolithic tank made of water-proof concrete. The structure shall include locksmith's products (railings, ladders, girders, etc.).

The machinery-room shall be located close to the reserve tank, in a single-storey building with a saddle roof. The building is assumed to include also a machinery-room for mechanical sludge dewatering and a switch room. The machinery-room shall contain machines and valves used for the control of the reserve tank operation. The building shall be thermally insulated, ventilated, and heated to the min. of 10 °C, or according to valid regulations.

Assumed tank parameters	Stage 1 1 line – 6,000 PE	Stage 2 2 lines – 12,000 PE
Aerobic stabilisation of excess sludge		
Number of tanks	1 tank	1 tank
Tank capacity *)	350 m3	350 m3

**) recommended value, this value must be calculated by bidder*

4.2.4.20. Aerobic stabilised sludge mixed holding tank

The structure shall be designed as a tank for collecting aerobic stabilised sludge. The tank shall be located close to the mechanical sludge dewatering machinery-room. The tank shape must enable its content to be stirred with stirrers, a cylindrical shape is recommended. The tank shall be insulated.

The structure shall be designed with parameters sufficient also for the planned scope of Stage 2.

The structure shall be designed as a reinforced-concrete monolithic tank made of water-proof concrete. The structure shall include locksmith's products (railings, ladders, girders, etc.).

03/12/18

Assumed tank parameters	Stage 1 1 line – 6,000 PE	Stage 2 2 lines – 12,000 PE
Pre-dewatering activated stabilised sludge mixed holding tank		
Number of tanks	1 tank	1 tank
Pre-dewatering activated stabilised sludge mixed holding tank *)	60 m3	60 m3

*) *recommended value, this value must be calculated by bidder*

4.2.4.21. Mechanical sludge dewatering

A machinery-room for the mechanical sludge dewatering shall be designed. The structure shall be designed as a single-storey building with a saddle roof. The building shall be thermally insulated. The machinery-room shall be ventilated and heated to the min. of 10 °C, or according to valid regulations. The building shall include a separate switch room, separated from the machinery-room, with an independent ventilation system. The machinery-room shall contain machines for sludge dewatering; its structure shall allow the installation of conveyors. The design assumes mechanical-technological equipment for mechanical sludge thickening to be added within Stage 2. A hard-surface area for a container shall be built next to the building. The spatial arrangement and orientation of the building shall allow trouble-free handling of the container with a truck. The building shall also include a separate room to hold the aerobic sludge stabilisation machinery-room. A heating/cooling system shall be designed in the building to allow the operation at extreme temperatures and at the maximum loading of the machinery.

Structurally, the structure built within Stage 1 shall be prepared also for Stage 2, technologically only for Stage 1.

Foundations, cable troughs, foundations for technological equipment, supporting floor slabs, and other supporting concrete parts of the structure shall be made of reinforced-concrete. The ceiling shall be made either from standard reinforced-concrete prefabricated hollow panels or in the form of a monolithic reinforced-concrete structure.

The walls shall be built either from perforated bricks of a complete bricklaying system or from a material of similar properties.

The roof supporting structure shall be formed by a system of wooden prefabricated truss girders with longitudinal wind bracing, or by another structure of suitable properties.

Standard internal plaster, lime-cement external plaster; reinforced-concrete floor slab with mineral filling and dust-prevention coating; walls with ceramic cladding; plastic windows, steel doors.

The structure shall include locksmith's products (lids, covers, platforms, railings, girders, etc.).

The hard-surface area for the container shall be made of concrete, drained to the internal sewage system.

03/12/18

4.2.4.22. Mechanical sludge thickening

The mechanical sludge thickening machinery-room shall be realised within Stage 2 of the construction; structurally it shall be prepared within Stage 1. The mechanical-technological equipment shall be located in the mechanical sludge dewatering machinery-room.

4.2.4.23. Dewatered sludge storage site

The structure shall serve as a reserve temporary storage site of dewatered sludge prior to its disposal.

The structure shall be designed with parameters sufficient also for the planned scope of Stage 2.

The structure shall be designed as a reinforced-concrete monolithic structure with a handling area, made of water-resistant concrete, consisting of the bottom (reinforced-concrete slab) and reinforced-concrete supporting walls from three sides, covered with a saddle roof.

The structure shall include locksmith's products (girders, etc.).

4.2.4.24. Construction wiring

Basic specifications

Supply voltage:	3+PEN, 50 Hz, 400/230 V/TN-C-S 1+N+PE, 50 Hz, 230 V/TN-S
Protection against dangerous contact with non-live parts:	Basic: automatic disconnection from the source Additional: current protector, supplementary bonding
Protection against dangerous contact with live parts:	Insulation, covers
Power supply level:	3 (1-measuring and regulation, data transfer)

The structure includes:

- Construction wiring,
- Electronic security,
- Construction wiring switchboards,
- Earthing system.

Main power distribution system

The main construction switchboard shall be installed in the LV switchboard and supplied from the main LV switchboard. The main construction switchboard shall supply secondary construction switchboards located in individual structures. Cabling shall be made of CYKY cables, of H03VV-F type LV cords 0.4 kV from transition boxes (if not part of the equipment delivery), and for M&R either CYKY cables for the supply of equipment and JYTY, SYKFY or TCEKFY shielded cables. All cables shall have a copper core and a cover resistant to flame spreading. Cables in structures shall be laid in the main routes in galvanised-steel wire cable

03/12/18

troughs, branches to individual pieces of equipment shall be laid in protection pipes. M&R cables shall be laid separately from LV power cables.

Artificial lighting

Artificial lighting shall be provided with fluorescent lights located according to the layout. The lights shall be controlled with switches placed by entrance doors to the rooms. The intensity of lighting in individual rooms shall be designed in compliance with a valid technical standard for artificial lighting.

Socket wiring

Socket boxes with 230 and 400 V sockets shall be installed in individual rooms of the building structures. LV switch rooms shall be fitted with 230 V/16 A sockets. The control room shall be fitted with 230 V/16 A sockets with grade III overvoltage protection. Rooms specified as washrooms, showers, etc. supplementary bonding shall be made, and socket and lighting circuits shall be protected with current protectors with 30 mA tripping current. Wiring shall be made with CYKY cables.

Air-conditioning

The construction switchboard shall supply fans and the air-conditioning system. Fans shall be controlled with room thermostats, hygrostats, or switches; the air-conditioning system with its own heat sensors. Wiring shall be made with CYKY cables.

Heating

Spaces concerned shall be heated with electrical convector heaters with integrated thermostats, or with electrical radiant ceiling panels, activated upon temperature set on an external thermostat. Input of the thermostats shall be determined upon the calculation of thermal losses of the heated structure. Wiring shall be made with CYKY cables. The convector heaters shall be placed according to the layout of individual structures.

Structure security

Security and emergency alarm system (SEAS)

The SEAS must be designed to provide both envelope and spatial protection of structures. The SEAS serves for signalling unauthorised access to guarded structures. Structures shall be secured with passive infrared motion detectors and magnetic contacts. The detectors shall be connected to individual loops which are connected to a terminal box of the SEAS switchboard. Local alarm signalling with an exterior backed-up siren and remote transmission from the control system through a radio modem is designed. The switchboard is supplied from a code keyboard located behind the entrance door of each guarded structure. The alarm switchboard shall be located in the operation building personnel room.

The alarm switchboard shall be supplied from the construction wiring switchboard. The terminal is protected with a circuit breaker a provided with the "SEAS – do not turn off!" sign. The switchboard is backed up with an accumulator of the min. capacity 7 Ah, located inside a box in the switchboard. The accumulator is of a hermetic type, maintenance-free for at least

03/12/18

3 years and permanently recharged. SEAS outlet with an unauthorised access signal shall be brought through a copying relay to the control system terminals in the M&R switchboard.

Lightning conductor

External lightning protection

The decision on the protection of the construction or a utility line against lightning, as well as the selection of protective measures, must be made in compliance with relevant standards. The following procedure must be observed:

- Identification of the structure to be protected and its characteristics,
- Determination of all types of losses,
- Evaluation of the protection necessity,
- Evaluation of protection cost efficiency.

The WWTP structures shall be categorised according to a relevant standard and the lightning conductor shall be designed upon the level of the permissible risk determined. Most of the WWTP structures will fall into LPS III class for which the rolling ball radius of 45 m and α = 70° are determined, related to the location of the lightning conductor on the structure top. An auxiliary conductor made of Ø 8 mm FeZn wire shall be used for external LPS. Large metal objects (gutters, ladders, exhaust heads, etc.) shall be connected to the lightning conduction system. A protected structure shall be fitted with leads made of Ø 8 mm FeZn wire, running on the structure surface. Each lead is connected, through a test terminal, to earthing outlets made of Ø 10 mm FeZn wire. In specific cases (ventilation exhaust piping with an exhaust fan, aerial mast, etc.), a distant lightning conductor shall be used.

A terminal box of the main bonding and the switchboard shall be connected to the earthing system. Connections in the ground shall be made with corrosion resistant terminals. The lightning protection shall be provided in compliance with a valid technical standard.

Internal lightning protection

This includes equipotential bonding against lightning and equipment overloading protection.

Earthing and bonding

The WWTP earthing system shall be made with an earth strip FeZn 30x4 mm laid in the foundations of the newly built structures and to trenches for external cable routes. The total resistance of the earthing system is assumed to be equal to or higher than 5 ohm. Earthing points of all switchboards, shielding of all M&R cables, and all external ground terminals of field instrumentation devices shall be connected to this earthing system.

Internal spaces shall be provided with equipotential bonding of the structure to prevent potentials from equalising. This includes interconnection of all steel structures, piping, electrical devices, air-conditioning, etc. The equipotential bonding busbar shall be conductively connected with the WWTP earthing system.

Main bonding shall be made, serving for the equalisation of potentials between the wiring protective conductor and metal parts of the structure and technology (conductive parts of

03/12/18

machines and other equipment incl. piping leading in and out of the structure). The bonding shall be made with conductors of a given cross-section, connected to steel structures with terminals placed around piping or below flange bolts.

Overvoltage protection

The structure is protected with overvoltage protectors. Overvoltage protection of grades I and II shall be located in the main and secondary construction switchboards.

Environmental impacts

Works specified in this structure, as well as operation of the electrical equipment designed within this structure, have no negative impacts on the surrounding environment, thus no special measures are required.

Occupational health and safety

Electrical equipment must be made in compliance with valid technical standards.

Electrical equipment may be put into permanent operation only upon gaining a positive result of the initial revision confirmed in written in the revision report.

Works related to this structure require no special safety measures beyond established practice and have no negative impacts on workers' health.

4.2.4.25. Heating

All buildings and machinery-rooms within the WWTP shall be heated according to the requirements of the machinery and equipment producers and the operator. Heating must allow year-round operation even at extreme temperatures and conditions. Places with assumed permanent or long-term stay of the personnel shall be heated to the min. of 20 °C, or according to valid regulations.

4.2.4.26. Sanitary system

Internal distribution of potable water for hygienic purposes, service water for machinery, and draining of floors and rooms shall be designed in the structures. The internal sewage system shall open to the WWTP sewerage. Rainwater from the roofs shall be drained to the sewage system, or to unpaved areas. Standard sanitary fixtures according to European customs shall be designed. Electric tankless water heaters shall be designed for water heating. Every connection in all structures shall be fitted with a main closure and a backwater valve. Outlet valves for hoses to be used for rinsing floors shall be designed.

4.2.4.27. Air-conditioning

For structures without sufficient natural ventilation, a forced ventilation/air-conditioning system shall be designed according to the purpose of the structures and requirements of the technology manufacturers. The system shall allow year-round operation even at extreme temperatures and conditions.

In the mechanical sludge dewatering and aerobic sludge stabilisation structure the air-conditioning system shall include air deodorising ensuring the removal of odours from the air

03/12/18

discharged to the surrounding outer environment. Particularly limits set by the EIA, which forms an integral part of the WWTP design and construction, shall be observed.

4.2.4.28. Water distribution system

Potable and service water distribution system shall be designed for the WWTP premises. The source of potable water shall be the existing supply system of the town of Danilovgrad. A connection running along an existing unpaved road to the WWTP shall be designed. The connection shall include a measurement shaft. The in-compound potable water distribution system shall supply all main structures; it shall be used for hygienic purposes and operation of those technological equipment and machinery which are required to use potable water. The distribution system shall be designed to meet hygienic and technological requirements.

The source of service water shall be treated water from the WWTP effluent obtained from behind the UV outflow disinfection structure, or a well within the WWTP premises. An offtake shaft with collection space and automatic pressure station shall be designed. The service water distribution shall be designed according to the operational requirements and needs of technological equipment and machinery supplied. Alternatively, potable water may be used as the source of service water.

A fire-fighting water source shall be provided in compliance with relevant regulations.

The Contractor shall be responsible for the piping material design; however, PEHD or ductile cast iron pressure pipes are recommended to be used.

4.2.4.29. Architectonic design

The project shall include an overall architectonic design of the WWTP. The final design of the WWTP shall be approved by the Employer. The architectonic design shall correspond to the industrial character of the structure, its priority being the maximum functionality of the structures and equipment.

4.2.4.30. Transformer station

A prefabricated, kiosk-type transformer station shall be designed, delivered turnkey within the electrical part. Excavation and foundation works shall be dealt with in the building part.

4.2.4.31. Connecting piping and flumes

This building structure includes piping and flumes connecting individual WWTP tanks and structures of the water line, including bypasses. It covers discharge piping to the Zeta river, incl. the outfall structure. The WWTP shall have one discharge piping and one outfall structure. The structure further includes all necessary shafts and valves. The design must allow trouble-free construction in Stage 2 without WWTP shutdown and further investments.

Reinforced-concrete monolithic structures shall be designed.

The Contractor shall be responsible for the piping material design; however, glass-reinforced plastic, plastic or ductile cast iron pressure pipes are recommended to be used (pressure pipes for pressure flow).

03/12/18

4.2.4.32. Sludge piping

The structure consists of piping for transporting sludge from the technological process; including all necessary shafts, flow distribution structures, and valves. The design shall take into consideration other utility lines. Further, the design must allow trouble-free construction in Stage 2 without WWTP shutdown and further investments.

Reinforced-concrete monolithic structures shall be designed.

The Contractor shall be responsible for the piping material design; however, glass-reinforced plastic, plastic or ductile cast iron pressure pipes are recommended to be used.

4.2.4.33. Air piping

Piping for supplying air from the blower house to the activated sludge tanks and from the machinery-room to the aerobic sludge stabilisation tank shall be designed. The piping shall be resistant to high temperatures and shall run underground. Noise and vibration transmission from the blowers shall be eliminated. The design shall take into consideration other utility lines. Further, the design must allow trouble-free construction in Stage 2 without WWTP shutdown and further investments.

The Contractor shall be responsible for the piping material design; however, glass-reinforced plastic or stainless steel pressure pipes are recommended to be used.

4.2.4.34. Sewage system

A combined sewage system shall be designed for the whole WWTP premises. It shall serve for removing sewage from all operational complexes incl. sludge liquor; collecting rainwater from communications, hard-surface areas, and roofs; collecting sewage from sanitary facilities. The sewage system shall open to the treatment process beginning, before the coarse screen. Shafts for inspecting and cleaning the system shall be designed in bending points or as required. The design shall take into consideration other utility lines. Further, the design must allow trouble-free construction in Stage 2 without WWTP shutdown and further investments.

The Contractor shall be responsible for the piping material design; however, plastic pipes (PP, PVC) are recommended to be used.

Rainwater shall be disposed of within the WWTP premises by sinking into the ground.

4.2.4.35. Cable lines

Cable routes made of plastic protection pipes laid in the ground and connecting all operating structures shall be designed for cable lines. Cables of heavy current and light current distribution, M&R cables, and exterior lighting cables shall be laid in these routes. Reinforced-concrete monolithic, water-resistant shafts for inspecting and repairing the cable routes shall be designed in bending points or as required. A conductor allowing identification shall be laid into the trench. Routes running under communications and hard-surface areas shall be dimensioned for loading from trucks. An earthing set shall be included. The design shall take into consideration other utility lines. Further, the design must allow trouble-free construction in Stage 2 without WWTP shutdown and further investments.

03/12/18

4.2.4.36. Exterior lighting

Lighting for basic orientation within the WWTP premises shall be designed, with discharge tube or LED lights, 230 V, located on hot-dip galvanized masts. Exterior lighting shall be supplied from the main construction switchboard and controlled in an automatic mode by a light relay completed with a switching clock or manually from the switchboard. Cabled between the lights shall run either together with cable routes or separately.

4.2.4.37. Communications and hard-surface areas

A hard-surface communication (asphalt or concrete, min. width 4 m, lined with kerbs) shall be designed to provide access to every important operating structure. The communications shall be drained through storm inlets or to open terrain. The communications shall be suitable for trucks. These structures shall include hard-surface areas around structures and car parks. A new access communication to the WWTP premises shall be designed in the place of the existing unpaved road, connected to the Danilovgrad road network.

Staircases with railings and pavements from concrete interlocking pavers shall be designed for pedestrians.

4.2.4.38. Landscaping

This part shall include landscaping, necessary filling and backfilling of structures, topsoil spreading, grassing and planting. Prior to the construction commencement it is necessary to remove the cultural layer, which shall be reused for re-cultivation.

4.2.4.39. Fencing

The WWTP premises shall be fenced off from all sides to prevent unauthorised access. There will be one entrance gate and one door located towards the outfall structure. The main gate shall consist of a gate for trucks and a wicket for pedestrians. The gate shall be automatic with remote control. The fencing shall be made of plastic-coated wire mesh with the min. height of 1.8 m and steel, plastic-coated pillars anchored to prefabricated footings.

4.3. PARTICULAR REQUIREMENTS – MECHANICAL PART

4.3.1. Recapitulation of existing situation and required scope of works

The new WWTP Danilovgrad shall be built "on a greenfield site".

The construction of the new WWTP is planned to be realised in two stages:

Stage 1 – construction of WWTP for the capacity of 6,000 PE

Stage 2 – completion of construction of WWTP for the capacity of 12,000 PE

4.3.2. Required technical design

The WWTP shall be designed as unattended with fully automatic operation.

The WWTP shall be divided into three basic units: coarse and fine mechanical pre-treatment, biological treatment, and sludge treatment.

03/12/18

The mechanical-technological part of the Danilovgrad WWTP must consist at least of the following technological units – mechanical and electrical engineering units:

Mechanical Treatment

Biological Treatment

Sludge Treatment

Sludge Dewatering

4.3.2.1. Mechanical Treatment

For detail information on tanks and building structures related to this technological unit see the building part.

For detail information on technological parameters of this technological unit see the technological part.

The technological unit must include at least the following:

- Gravel trap
- Mechanically scraped coarse screen
- Equipment for receiving collected sewage waters
- Inlet pumping station in the WWTP
- Compact equipment with fine screen and gravel/grease trap

The overflow/closing chamber located on the WWTP inflow shall contain an electrically driven closing device for the flow regulation of complete closure of the WWTP inflow. The structure shall further contain a scumboard to prevent floating substances, oil substances, and fats from entering the river or the rainwater mechanical treatment equipment on the overflow.

Gravel trap shall be designed for trapping coarse impurities pushed along the bottom or carried above the bottom of the inflow sewer. It shall be designed for the maximum WWTP inflow including rainwater. It will serve as protection of subsequent equipment and machinery. The building part shall allow the installation of machinery for the deposited material collection. This material shall be collected by a revolving grab and transferred directly to a container placed on a railway cart. Trouble-free handling of the container must be ensured. The container removal shall be carried out with a truck.

Mechanically raked coarse screen shall protect pumps of the inlet pumping station by collecting coarse impurities. The pore width will depend on the type of the pumps designed for the pumping station. The screen shall be designed for the maximum WWTP inflow including rainwater. The building part shall allow the installation of screen with automatic raking of collected impurities. Impurities shall be automatically transferred to a container placed on a railway cart. Trouble-free handling of the container must be ensured. The container removal shall be carried out with a truck.

03/12/18

Equipment for receiving collected sewage waters shall be located in a new structure serving for removing sewage waters from septic trucks collected from cesspits and septic tanks. The building part shall include a water-resistant, covered collection tank with the operating capacity of 16 m^3. The tank shall be filled only through an automatic station for receiving sewage waters, appropriately equipped for measuring pH, conductivity, and temperature, and for automatic sampling. Tank emptying shall be controlled automatically. The tank runoff shall empty before the gravel trap and coarse screen; the whole content of the tank shall be designed to be discharged by gravity. The tank shall include a stirrer for homogenizing the content, valve for discharging the tank content, and ultrasound probe. A stirrer hoisting mechanism, valve control stand, and automatic station for receiving sewage water shall be located on the tank ceiling. This station shall be installed in a separate, heated container and equipped with a system for automatic registration of the discharged sewage water quantity.

Inlet pumping station of the WWTP shall serve for pumping wastewater to the fine mechanical pre-treatment and biological treatment in the maximum quantity of 26.3 L/sec in Stage 1 (6,000 PE) and of 52.6 L/sec in Stage 2 (12,000 PE). Discharges exceeding the maximum pumped quantity shall be diverted (overflowing) through the bypass and WWTP outfall piping to the Zeta river.

Structurally and technologically the structure shall be prepared for Stage 1 and must allow pumps to be installed according to the manufacturer's requirements. The pumping station shall be fitted with at least 3 pumps (2+1). The pumps shall be activated upon the level in the intake pit. Their operation shall be controlled by frequency converters to a constant level in the intake pit. The pumps shall be installed and disassembled with the use of a small crane with manual travel and lift. An induction flowmeter shall be installed on joint delivery piping, for measuring the wastewater inflow to the WWTP. The structure shall also include a scumboard to prevent floating substances, oil substances, and fats from entering the river or the rainwater mechanical treatment equipment on the overflow.

Compact equipment with fine screen and gravel/grease trap

This structure shall be designed as a double-line system; one separate unit shall be installed within Stage 1 (6,000 PE). Another, identical, unit shall be installed within Stage 2.

A compact unit shall be designed for each line, consisting of a rotary fine screen, aerated gravel trap, and floating impurities (fats) trap. The unit shall be designed for the maximum flow of 30 L/sec. Screenings shall be collected and removed, together with fats, by a conveyor with an integrated press to a separate container placed on a railway cart. Organic impurities shall be washed from trapped sand; the sand shall be removed by a conveyor to a separate container placed on a railway cart. Air shall be supplied by an integrated compressor. The unit operation shall be fully automatic, with personnel required only for occasional emptying of the containers. Trouble-free handling of the containers must be ensured. The container removal shall be carried out with a truck.

List of the main technological equipment required:

Gate with electric drive on the inflow

Gravel trap machinery, rotary with a hydraulic grab

03/12/18

Mechanically scraped coarse screen – max. pore width 80 mm (acc to the type o pumps in the inlet PS)

Gravel container chassis with electric drive – min. loading capacity 9 t

Screenings container chassis with electric drive – min. loading capacity 9 t

Containers with draining for gravel trap and coarse screen screenings 2+1 (min. 5 m^3)

Automatic station for receiving collected sewage waters with registration and measuring

Stirrer in the collected sewage water tank incl. a small crane

Draining closure of the sewage water tank with electric drive

Pump for emptying the sewage water tank

Compact equipment with fine screen and gravel/grease trap

Inlet PS pumps – min. 3 pumps connected 2+1 (installed reserve)

Hoisting device for the inlet PS – min. lifting capacity 1,600 kg

Electrical closing devices on pump delivery piping

Pump for soaks and for filling-up the inlet PS tank

Fine screen screenings container chassis with electric drive – min. loading capacity 9 t

Sand container chassis with electric drive – min. loading capacity 9 t

Containers with draining for fine screen screenings and sand, 2+2 (min. 5 m^3)

Compact unit with fine screen and gravel/grease trap

Piping incl. all necessary valves, electric valves and accessories

Other equipment not listed above, required for this PS (technological unit) according to the Contractor's technical design

4.3.2.2. Biological Treatment

For detail information on tanks and building structures related to this technological unit see the building part.

For detail information on technological parameters of this technological unit see the technological part.

The technological unit must include at least the following:

- Flow distribution structure before denitrification
- Denitrification tanks
- Technological equipment of circulating activated sludge tanks
- Blower house and air distribution
- Flow distribution structure before the final setting tanks
- Final settling tanks

03/12/18

- Return and excess activated sludge pumping station
- Dosing of phosphorus precipitant
- UV outflow disinfection structure
- Measuring flume on the WWTP outflow
- Automatic pressure station (ATS) of service water

Flow distribution structures

Structures for equal distribution of wastewater to two separate lines of the biological treatment shall be designed. The wastewater shall be distributed by gravity, with a perfect overflow including an adjustable overflow crest. The structures shall include manually controlled valves, allowing the tanks in both lines (pre-denitrification tank, circulated activated sludge tank and final settling tank) of the biological treatment to be cross-connected. Emergency bypass of the tanks shall be provided as well.

Pre-denitrification tanks

Two separate, identical denitrification tanks shall be designed. One tank shall be realised within Stage 1. Return sludge from the final settling tank shall be dosed into this tank. The tank shall be mechanically stirred with submersible stirrers. An overflow crest shall be designed on the runoff, allowing even discharge of wastewater to the circulating activation.

Circulating activated sludge tanks

Two separate, identical circulating activated sludge tanks shall be designed. One tank shall be structurally realised and technologically equipped within Stage 1. The tank shall include a denitrification section, stirred mechanically with submersible stirrers, and a nitrification section, aerated with aeration elements. Air distribution piping shall be made of a stainless material. A runoff shaft with an overflow crest (window) shall be designed on the runoff, allowing even discharge of the activated mixture to the final settling tanks.

Final settling tanks

Two separate, identical final settling tanks shall be designed. One tank shall be structurally realised and technologically equipped within Stage 1. The following description applies to one tank. A circular tank shall be designed for the activated sludge separation. Water shall flow into the tank through a flow distribution structure to the centre of the tank. Settled water shall be collected in a discharge gutter with an adjustable, stainless overflow crest, located around the tank perimeter. Then it shall run off through the window of the runoff shaft to the UV outflow disinfection structure.

Machinery for automatic raking of the bottom and the water level shall be installed. The collection of floating impurities and their discharge to the WWTP sewerage shall be provided. Settled sludge shall be collected in the central tank from where it shall be removed through piping to the sludge pumping station.

05/12/18

UV outflow disinfection structure

The structure shall be designed as a single-storey building with a saddle roof. The structure shall include two reinforced-concrete channels in which two separate UV disinfection units shall be installed. Even distribution of treated water to two channels shall be ensured, as well as a shutdown of either of the two corridors. The whole structure is designed to be built and one UV disinfection unit installed within Stage 1. A space behind the UV disinfection shall be reserved for the installation of automatic sampling from the channels or other measuring devices.

Measuring flumes

At least two flow measuring structures are designed to be installed. One measuring flume shall be installed on the storm-water overflow piping behind the overflow/closing chamber. The other measuring flume shall be installed on the treated water runoff at the end of the process. Parshall measuring flumes are recommended to be used due to their reliability and a wide range of flow rate. The structure shall be designed as an open, reinforced-concrete flume made of water-resistance concrete, in which the measuring profile shall be installed.

Return and excess activated sludge pumping station

A building structure containing pumps for return and excess activated sludge shall be designed. One pumping station is designed to be used for both final settling tanks. The structure built within Stage 1 shall be structurally prepared also for Stage 2, but technologically equipped only for Stage 1.

The structure shall be designed as a single-storey building with an underground section containing the sludge machinery-room and two sludge sumps. Submersible pumps of return and excess activated sludge shall be installed in the sumps. Thus, each sump shall contain at least 2 return sludge pumps (1+1) and 1 excess sludge pump. Their operation shall be controlled by frequency converters upon the required quantity of return sludge from the WWTP control system. The pumps shall be installed and disassembled with the use of a small crane with manual travel and lift. An induction flowmeter for measuring the quantity of pumped return sludge shall be installed on joint return sludge delivery piping. Another induction flowmeter shall be installed on the excess sludge delivery piping.

Dosing of phosphorus precipitant

The building structure includes a foundation slab for the precipitant tank and offtake point. The technological part includes a fully equipped double-walled tank with a capacity sufficient for at least 30 days of operation, and an automatic dosing station for dosing either to the pre-denitrification tanks or to the outflow from the activation tanks. The station shall include at least 3 pumps (2+1) and all necessary equipment for a fully automatic operation. The dose shall be set automatically upon the requirements received from the WWTP control system.

Blower house

The structure, in which blowers of circulating tanks are to be placed, shall be designed as a single-storey building with a saddle roof. The building shall be divided into a blower room and a switch room. The building shall be fitted with equipment for handling the blowers (their

03/12/18

assembly and disassembly). An air-conditioning system shall be installed in the building to allow trouble-free operation of the blowers even at extreme temperatures and at the maximum loading of the blowers. Capacity blowers fitted with noise covers shall serve as the source of air for the activation tanks. Air flow shall be controlled automatically upon the requirements received from the WWTP control system. The blowers shall be fitted with frequency converters. At least 2 blowers shall be installed for line 1 (1+1). The air distribution piping within the structure shall be made of stainless steel and thermally insulated. Valves with electrical drives shall be installed on the delivery piping from the blowers to allow automatic alternation of the blowers.

Automatic pressure station of service water

A new automatic pressure station with equipment shall serve as a source of service water for the WWTP. The minimum output pressure of 6 bar is required for the delivery from the station. The ATS output shall be dimensioned to cover all technology requirements according to the Contractor's technical design. The station shall be equipped with its own automatic control of pumps with frequency converters. A filter with a bypass shall be installed on the station delivery piping. The station must be designed to allow it to use both treated wastewater from the WWTP discharge and water from the well located within the WWTP premises as a source of service water.

List of the main technological equipment required:

Gates with both manual and electrical drives

Stirrers of the pre-denitrification ranks, incl. small cranes

Stirrers of denitrification tanks, incl. small cranes

Aeration elements of the activated sludge tank with accessories

Blowers with accessories

Final settling tank machinery

Tank and dosing of phosphorus precipitant

Return sludge pumps – min. 2 pumps connected 1+1 (installed reserve)

Excess sludge pumps – min. 2 pumps (1 pump as stock reserve)

Hoisting device for the return and excess sludge PS – min. lifting capacity 1,600 kg

Electrical closing devices on pump delivery piping

Electrical closing devices on blower delivery piping

Pump for soaks and for filling-up the return sludge PS tank

Equipment for UV disinfection of biologically treated wastewater

Piping incl. all necessary valves, electric valves and accessories

Other equipment not listed above, required for this PS (technological unit) according to the Contractor's technical design

l 03|12|18 Ž

4.3.2.3. Sludge Treatment

For detail information on tanks and building structures related to this technological unit see the building part.

For detail information on technological parameters of this technological unit see the technological part.

The technological unit must include at least the following:

- Storage tank for aerobic sludge stabilisation
- Aerobic sludge stabilisation machinery-room

Storage tank for aerobic sludge stabilisation

The storage tank shall serve for the aerobic stabilisation and gravity thickening of excess sludge. The tank shape must enable its content to be stirred, a cylindrical shape is recommended. The tank shall be insulated. Excess sludge from the return and excess activated sludge pumping station shall be pumped periodically into this tank. The operating capacity of the tank shall be aerated with aeration elements, or stirred periodically with stirrers. A separate blower shall serve as the source of air for the aeration element. Air distribution piping must be made of a stainless material.

Aerobic sludge stabilisation machinery-room

The machinery-room shall be situated in a single-storey building with a saddle roof built close to the storage tank. This building shall be designed to include also the mechanical sludge dewatering machinery-room and switch room. The aerobic sludge stabilisation machinery-room shall hold machinery and fittings for the control of the storage tank operation, and blowers for aerobic stabilisation. The machinery-room shall be fitted with equipment for handling the blowers (their assembly and disassembly). An air-conditioning system shall be installed in the building to allow trouble-free operation of the blowers even at extreme temperatures and at the maximum loading of the blowers. Capacity blowers fitted with noise covers shall serve as the source of air for the aerobic sludge stabilisation tank. Air flow shall be controlled automatically upon the requirements received from the WWTP control system. The blowers shall be fitted with frequency converters. At least 2 blowers shall be installed (1+1). The air distribution piping within the structure shall be made of stainless steel and thermally insulated. Valves with electrical drives shall be installed on the delivery piping from the blowers to allow automatic alternation of the blowers.

List of the main technological equipment required:

Stirrers of the aerobic sludge stabilisation tank incl. small cranes

Pumps from the tank into the homogenisation tank – at least 2 pcs connected 1+0 warehouse reserve)

Hoisting device for the aerobic sludge stabilisation machinery-room – min. lifting capacity 1,600 kg

Aeration elements of the aerobic sludge stabilisation tank with accessories

03/12/18

Blowers with accessories

Electrical closing devices on sludge piping

Electrical closing devices on air piping

Pump for soaks in the machinery-room

Piping incl. all necessary valves, electric valves and accessories

Other equipment not listed above, required for this PS (technological unit) according to the Contractor's technical design

4.3.2.4. Sludge Dewatering

For detail information on tanks and building structures related to this technological unit see the building part.

For detail information on technological parameters of this technological unit see the technological part.

The technological unit must include at least the following:

- Sludge homogenisation tank
- Mechanical sludge dewatering automatic line

Sludge homogenisation tank

The tank shall hold aerobically stabilised sludge before it is mechanically dewatered. The tank shall be located close to the mechanical sludge dewatering machinery-room. The tank shape must enable its content to be stirred with stirrers, a cylindrical shape is recommended. The tank shall be insulated.

Mechanical sludge dewatering automatic line

The mechanical sludge dewatering shall include a machinery-room holding a complete, fully automated line of mechanical sludge dewatering, consisting at least of a macerator, spindle pump for feeding sludge to the centrifuge, decantation centrifuge with accessories (incl. service platform), flocculant preparation and dosing device, screw conveyors of dewatered sludge from the centrifuge to a container, and service water flushing system for the whole line. The machinery-room shall be fitted with a device for handling the equipment (assembly and disassembly). Dewatered sludge shall be transferred from the centrifuge by the screw conveyors directly to the container placed on a railway cart. Trouble-free handling of the container must be ensured. The container removal shall be carried out with a truck.

List of the main technological equipment required:

Homogenisation tank stirrer, incl. a small crane

Macerator

Spindle pump for feeding sludge to the centrifuge (1+1 stock reserve)

Decantation centrifuge with accessories

Flocculant preparation and dosing device

ℓ 03/12/18

Dewatered sludge screw conveyors

Electrical closing devices on sludge piping

Electrical closing devices on flushing water piping

Dewatered sludge container chassis with electric drive – min. loading capacity 9 t

Hoisting device for the sludge dewatering machinery-room – min. lifting capacity 1,600 kg

Containers for dewatered sludge 1+1 (min. 5 m^3)

Piping incl. all necessary valves, electric valves and accessories

Other equipment not listed above, required for this PS (technological unit) according to the Contractor's technical design

4.3.3. Requirements on machinery and equipment of mechanical and electrical engineering units (PS)

Each PS must be delivered as a complete unit capable of a permanent safe and reliable operation. The delivery shall include especially equipment assembly, activation, and testing, personnel training, coordination of progress of all works, conducting inspection tests incl. elaboration of an inspection report.

The machinery and equipment must be selected with respect to effects of the environment in which they are to be installed. This applies especially to the selection of electric drives and other electric devices forming their parts.

All devices installed in exterior must be capable of a normal operation to -25 °C. They must be endure without any damages extreme frosts with temperature dropping even lower.

4.3.3.1. Requirements on the main machinery and equipment

Submersible sludge pump
Function: pumping wastewaters, rainwater or return sludge
Characteristics:
A submersible sludge pump for pumping wastewaters with a high content of abrasive solids and fibrous substances. To be installed in the wet chamber.
Design standard – grey cast iron
Parameters:
Output: acc. to the Contractor's specific design
Delivery pressure: acc. to the Contractor's specific design
Throughput: min. 90 mm
Installation: wet chamber
Medium:
1) Wastewater with a high content of abrasive solids and fibrous substances
2) Activated sludge with total dried solid content concentration 5.0 to 11 kg/m3
Max. operating water temperature: 20 °C
Interval of pH values: 5.5 - 11
Pump accessories:
Rest bend – grey cast iron
Stainless-steel parts - rest bend assembly set, guide bars, upper holder of guide bars, upper holder assembly set, suspension chain min. 6 m long, and chain hanger
Plastic parts: cable hanger and cable clamps, min. 15 m of cable

03/12/18

Motor: 400 V, 50 Hz
The motor shall be supplied incl. thermal detectors in the stator winding, seal leakage detector, and evaluating DI module of the seal leakage detector.
The motor shall be of the so-called flood design, i.e. the pump can work as submersible or with permanently exposed electromotor without the motor requiring additional cooling (it has its own cooling).

Dry chamber sludge pump
Characteristics:
A sludge pump for pumping wastewaters with a high content of abrasive solids and fibrous substances, incl. return, excess, and digested sludge. To be installed in the dry chamber.
Design: standard – grey cast iron
Parameters:
Output: acc. to the Contractor's specific design
Delivery pressure: acc. to the Contractor's specific design
Throughput: min. 60 mm
Installation: dry chamber
Medium:
1) Wastewater with a high content of abrasive solids and fibrous substances
2) Activated sludge with total dried solid content concentration 5.0 to 11 kg/m3
3) Thickened secondary sludge, dried solid content concentration 4-6 %
Operating temperature: 20–40 °C
Max. sludge temperature 50 °C, possible occurrence of abrasive solids
Max. machinery-room operating temperature: 40 °C
Interval of pH values: 5.5 - 11
Pump accessories: pump stand, 15 m of cable
Materials:
Generally, all parts of the equipment must be made of materials resistant to the effects of the environment in which they are installed.
Pumping unit, runner: standard – grey cast iron
Pump stand: grey cast iron
Anchoring and fastening material: stainless steel
All stainless-steel structures shall be pickled and passivated.
Motor: 400 V, 50 Hz
The motor shall be supplied incl. thermal detectors in the stator winding, seal leakage detector, and evaluating DI module of the seal leakage detector. Electromotor with its own cooling

Single-spindle horizontal sludge pump
Medium:
1) Collected sludge with total dried solid content concentration up to 8 %
2) Secondary biological sludge from final settling tanks
3) Thickened secondary sludge with dried solid content concentration 4-6 %
Operating temperature: 20–30 °C
Max. sludge temperature 40 °C, possible occurrence of abrasive solids
Interval of pH values: 5.5 - 11
Parameters:
Output: acc. to the Contractor's specific design
Delivery pressure: min. 6 bar
The motor shall be equipped with thermistors in the stator winding and designed to be controlled by a frequency converter.
Accessories: overpressure and dry run protection (manometer, membrane, pressure switch)

03/12/18

Submersible sludge stirrer
Location: collected sewage water tank, pre-denetrification tank, homogenisation tank
Description:
Medium:
1) Wastewater with a high content of abrasive solids and fibrous substances.
2) Collected sludge without coarse pre-treatment, total dried solid content concentration up to 8 %
3) Activated sludge with total dried solid content concentration 5.0 to 11 kg/m3
3) Thickened secondary sludge with dried solid content concentration 4-6 %

Max. operating water (sludge) temperature: 30 °C
Interval of pH values: 5.5 - 11

Structural design:
A submersible unit to be installed on a lowering device (guide bars), turning horizontally and lockable in any position
Motor: 400 V, 50 Hz
Accessories:
-10 m long cable, thermal detectors in the stator winding, and seal leakage detectors
- Evaluating DI module of the seal leakage detector
- Guide bars – stainless steel (incl. anchoring)
- Portable hoisting device for the stirrer disassembly
- Anchoring material
Materials:
Generally, all parts of the equipment must be made of materials resistant to the effects of the environment in which they are installed.
Stirrer body: stainless steel
Propeller: stainless steel
Guide bars: stainless steel
Fastening/anchoring material: stainless steel
All stainless-steel structures shall be pickled and passivated.

Submersible low-speed stirrer in activated sludge tanks
Location: denitrification sections of circulating activated sludge tanks
When the stirrer location is designed, denitrification construction design (tank dimensions, location of bridges and service walkways, flow direction in the tanks, activation elements area) must be taken into account.
Medium: activation mixture with concentration 2.8 – 5.5 kg/m3
Operating temperature range: 8-22 °C
Interval of pH values: 6-8
Structural design:
A submersible unit to be installed on a lowering device (guide bars), turning both horizontally and vertically and lockable in any position
A footing for a portable hoisting device (crane) shall be installed for each unit. Both the footing and the crane are part of the stirrer delivery.
Required activated sludge flow rate: 0.28 m/sec in any place of the tank
Propeller diameter: min. 2 m
Propeller revolutions: max. 40 rev./min.
Motor: 400 V, 50 Hz
Accessories: 10 m long cable, thermal detectors in the stator winding, seal leakage detectors, evaluating DI module of the seal leakage detector, individual signalling relay, concrete pedestal, activation device, stainless-steel anchoring material

03/12/18

Materials:
Generally, all parts of the equipment must be made of materials resistant to the effects of the environment in which they are installed.
Stirrer body: glass-reinforced plastic with protective sprayed coating against wastewater and sludge, preventing organic particles from adhering to the surface
Submersible unit, guide bar: stainless steel
Fastening/anchoring material: stainless steel

Aeration grates of the circulating activated sludge tanks
Function: activated sludge tank aeration
Location: circulating activated sludge tank
Type: aeration grate with fine-bubble elements with an elastic membrane
The membrane shall be made from a highly-flexible and slow-aging material with the min. expected lifetime of 8 years.
Parameters: activation mixture with concentration (SOTR) = **min. 1,250 kg/day**
Detailed technological parameters of activation: see Technological part of this report.
Medium: activation mixture with concentration 2.8 – 5.5 kg/m^3
Operating temperature range 8-22 °C
Interval of pH values: 6-8

Delivery scope:
The aeration system delivery must include all the below-listed components located below the tank water level:
- Complete delivery of aeration elements
- Anchoring, fastening, and assembly material of the elements
- Complete delivery of air distribution piping incl. distribution system draining (if required by the aeration system designed)

Activation blower with noise cover
Location: blower house
Parameters:
Machinery-room temperature: max. 35 °C
Supplied air quantity: acc. to the Contractor's design
Blower parameters are based on the aeration system for the activation tanks. Blower output (Q) shall be specified by the Contractor upon the air quantity required for the activation tanks, determined by the aeration system supplier. Blower overpressure (Δp) shall be determined upon the sum of the water depth in the tank, pressure losses specified by the aeration system supplier, and pressure losses in air distribution piping to the activation tanks.
Blower revolutions (controlled by a frequency converter), which equals to the quantity of supplied air, shall be determined upon the oxygen demand to the aeration tanks.
The electromotor shall be adjusted for the revolution regulation by a frequency converter. The converter's required parameters shall be specified by the blower supplier in the bid and, subsequently, a particular type of the frequency converter shall be selected according to the blowers and included in the heavy current delivery.
Motor 400 V, 50 Hz
Delivery scope:
- Blower
- Electromotor
- Belt transmission
- Suction damper and filter with clogging indication
- Delivery damper

l 03/12/18

- Backflow valve
- Delivery manometer
- integrated start-up and safety valve
- Stainless compensator
- Measuring
  - temperature on blower delivery – continually
  - temperature inside blower cover – continually
  - pressure on blower intake – continually
  - pressure on blower delivery – continually
- Noise interior cover and ventilation system

Max. noise level 1 m from the cover: 70 dB

Mechanical gravel trap unit

Function: collection and removal of gravel from the WWTP inflow

The unit shall include a switchboard from which the unit shall be controlled. The delivery shall also include voltage-less contact (indication to the control room of the unit being handled).

The unit shall consist of at least the following parts:

- Electrically driven revolving boom
- Mobile pulley block with electrical lift and travel
- Hydraulic double-bucker grab
- Hydraulic unit
- Supporting pillar, incl. anchoring
- Distribution box and control panel mounted on the pillar
- Hydraulic hoses from the grab to the unit on a winding drum
- Required cabling

Parameters:

- Min. grab capacity 0.1 m^3
- Min. pillar height 4,000 mm
- Min. boom length 3,500 mm
- Min. loading capacity 500 kg
- Min. action radius 260°
- Hydraulic drive 400 V, 50 Hz
- Electrically-driven turning boom 400 V, 50 Hz
- Pulley block with electrically-driven boom travel 400 V, 50 Hz
- Min. lift 8 m (acc. to the Contractor's specific design)

The unit shall be made of class 11 steel and provided with surface protection (galvanised + coating). The unit shall be located in exterior. Collected gravel shall be loaded to a container.

Mechanically scraped coarse screen

Location: in the channel behind the gravel trap

Function: collection of coarse impurities entering the inlet PS

The screen shall include a switchboard from which it shall be controlled, incl. the water level measuring. The switchboard must be fitted with an automatic control device with industrial-protocol communication.

Flow Q: min. 130 L/sec

Pore width: max. 80 mm (acc. to the throughput of the inlet PS pumps)

Channel width: acc. to the Contractor's design

Channel depth in the place of installation: acc. to the Contractor's design

Max. level: acc. to the Contractor's design

Incline: approx. 65°

03/12/18

Scraping speed: approx. 7.5 m/min
Discharge height above the ground: min. 1,900 mm
Electric drive: 400 V; 50 Hz
A container placed on a railway cart shall be situated below the screen discharge.
Exterior design – the screen shall be insulated.
Intended for permanent operation up to -25 °C
Material: stainless steel 17240

Tripping container for screenings, sand and gravel
Function: for screenings collected by the coarse and fine screens, gravel collected by the grab, and sand from the gravel trap
Capacity: min. 5 m^3
Design: 4 suspension eyes for lifting it to a truck with chains and a lever mechanism. A particular type and design of the containers must be approved by the WWTP operator

Electrically-driven railway cart under the container
Function: handling the containers with screenings collected by the coarse and fine screens, gravel collected by the grab, and sand from the gravel trap
Loading capacity: min. 9,000 kg (or more according to the number of containers)
Platform equipment: electric drive in both directions, handbrake, 2 wedges for each platform for securing its position, possible manual drive.
Material: structure – hot-dip galvanised class 11 steel, all pivoting parts (except for the wheels) and mechanisms (brake spindle, etc.) – 17240 stainless steel
Input: max. 1 kW, 400 V, 50 Hz

Minimum required accessories:
- Control switchboard to which a cable from the winding drum placed on the cart shall be connected. When the cart is moving, a yellow beacon is on and discontinuous alarm sounds. End switches shall be installed on the cart. The cable connecting the cart with the switchboard is part of the delivery.
- Rails incl. stops and footings (the rails shall be let in the floor).
- Anchoring material

Station for receiving collected sewage waters
Location: in a heated container (part of the station delivery)
Function: receiving septic trucks, identifying customers, checking the truck content
Medium: collected sewage waters with total dried solid content concentration up to 8 %
Operating temperature range: 7-30 °C
Interval of pH values: 6-10
The station shall include:
- Switchboard with all functions for automatic operation of the unit, identification and registration of customers. The switchboard must be equipped with an automatic control device with industrial-protocol communication.
- Registration units for the receiving, allowing documents on the arrival and quantity of discharged wastewater to be printed
- 1 electrically-driven gate valve controlled by customers' magnetic cards, by the evaluation system of the unit (acc. to the wastewater quality), and from the WWTP control system (e.g. reaching the maximum level in the reserve tank)
- 1 electrically-driven valve – flushing service water piping

l 03/12/18

- Induction flowmeter
- pH measuring, with the gate valve automatically closing when the set value is exceeded.
- Conductivity measuring
- Temperature measuring
- Automatic sampling device (capacity - 24 samples)
- Piping incl. fittings, accessories, and anchoring material (the piping shall include a DN 100 rapid coupling for connection to septic trucks, main manual closing device from outside the structure, complete equipment of the station interior incl. service water piping, piping passing through passages into a retaining tank)
- Insulation and heating of exterior piping
- Insulated and heated container (approx 3,000 x 2,435 x 2,800 mm)

Material: 17 240 stainless steel
Max. total input. 7 kW, 400 V, 50 Hz, out of which approx. 2 kW heating (el. convector)

Function description:
After a truck is connected and customer's card inserted, the gate valve into the reserve tank shall open. If the wastewater quality does not meet the specified parameters, the gate valve shall be immediately closed (blocked). The gate valve must be unblocked manually or from the WWTP control room. The gate valves must be designed with a short closing time (max. 15 sec). The gate valve on the retaining tank piping shall be opened locally from the switchboard, or remotely from the WWTP control room. The gate valve must be blocked from the max. level in the retaining tank and unblocked upon the level lowering. All measured data and failures shall be transmitted to the control room. The electrically-driven gate valve shall be controlled from the control room.

Upright double-walled plastic tank with ferric sulphate dosing station
A) Upright double-walled plastic tank with a flat bottom and conic lid
Location: concrete area next to the activation tanks
Min. capacity: 28 m^3, material: PE-HD
Chemicals: 40% ferric sulphate (density 1.56 kg/dm^3)
Accessories:
Inspection manhole, ventilation, filling piping, level mechanical indication (floating system) with two adjustable level contacts of the minimum level, overflow to an external tank, filling piping with a bayonet connection for tankers, ball valve, dosing pump intake incl. connection with a reserve tank and dosing unit, retaining basin, material PE (PP), rain-protection edge, tank leakage detector incl. light and acoustic signalisation, anchoring material, other required accessories
Ladder leading to the tank including:
- Work platform with safety railing (above the tank)
- Safety cage along the vertical section of the ladder

B) Exterior cabinet-type station for dosing 40% ferric sulphate (density 1.56 kg/dm^3)
Location: concrete area next to the plastic tank
Parameters: acc. to the Contractor's design, max. back pressure approx. 6.5 bar
Manual control with analogue current signal 4–20 mA, 230 V/ 50 Hz voltage
Membrane dosing pump: 2 pcs (1 pc – stock reserve)
Accessories:
- Safety valves, pulse dampers, back-pressure valves, piping and fittings set inside the cabinet, cabinet, distributor, injection valves

03/12/18

Final settling tank machinery
Type: Final settling tank machinery for a tank of the min. diameter of 12.5 m, min. water depth at the edge of the tank 4 m, steel central pillar. The tank shall be provided with a concrete discharge gutter (building delivery)

Required input parameters:

1. Concentration of undissolved substances on the tank discharge: p/m = 10/30 mg/L, where "p" is the permissible concentration for analyses of mixture samples of discharged wastewaters, and "m" is the maximum permissible concentration for analyses of plain samples of discharged wastewaters.

2. In order to prevent diluting of the discharged return sludge, appropriate density flow in the tank must be provided, or suitable equipment installed: concentration of discharged return sludge from the tank shall not be less than 8.0 kg/m^3.
The Contractor shall design the capacity and dimensions of the flocculation cylinder, shape of direction deflectors, disposal method of floating sludge from the flocculation cylinder and from the level inside the tank, and method of travel with trouble-free winter-time operation.

Structural design:
Travel bridge equipment:
Travel bridge: hot-dip galvanised class 11 steel
Central pillar: stainless steel
Raking device of the tank bottom and level suspended on the travel bridge: 17240 steel
Railing: stainless steel
Grates: composite material
Bridge travelling on a full rubber wheel with a side drive, winter-time operation ensured (scraper, brush, etc.)
Bearings: class 11 steel + coating
Annular collector
Overflow crest and gutter cleaned with an electrically-driven rotary brush
Complete wiring of the tank bridge incl. a complete switchboard for the equipment installed (supplied from the annular collector – 400 V/50 Hz) and cable routes from the switchboard to individual devices and to the annular collector in the centre of the bridge. Signals (remote travel control, combined failure, travel operation, rotary brush operation) and command for remote activation of the bridge operation shall be brought from the switchboard to the annular collector. The switchboard shall be made of plastic with a roof. The bridge shall be equipped with lighting (of the bridge and the tank).
The detector indicating the bridge travelling over a monitored spot is not part of the delivery (the bridge shall be fitted only with a stop).
Min. protection: IP 55, IP 54/20 for the switchboard
Switchboard input: max. 2 kW, 400 V/50 Hz
Other equipment of the final settling tank:
Scumboard, overflow crest, anchoring material: 17240 steel
Feeding piping of min. DN 500: 17240 steel
Electric cable protection tube: 17240 steel
Inflow cone: 17240 steel
Flocculation cylinder: 17240 steel
Directing cylinder: 17240 steel
Floating impurities collection and piping (incl. equipment for automatic flushing of the piping with treated wastewater every time the floating impurities are collected) – stainless steel
Ladder mounted on the travel bridge
All welds of 17240 steel items: pickled welds (acc. to valid standards)

l 03/12/18

Scumboard design: in the place of the floating impurities collection the scumboard shall reach 500 mm below the water level, gradually at 30°, in the section starting 1 m before the leading part of the floating impurities discharge and ending 1 m behind the end of the floating impurities discharge.
Material:
Details on materials of individual parts of the unit are given in "Structural design".
All stainless-steel structures shall be pickled and passivated.

Compact unit with fine screen and sand/fat trap
Location: under a shelter in an open area
Inflow to mechanical pre-treatment: Q max: 30 L/sec
- Required screen pore width: max. 6 mm
Description:
The compact unit consists of a rotary screen and elongated aerated trap of sand and floating impurities (fats). Screenings are collected and removed, together with fats, by a conveyor with an integrated press. Trapped sand is shifted by a horizontal screw conveyor against the flow direction to a collection place, while organic substances are washed out from the sand. From the collection place the sand is removed by an inclined screw conveyor. Air for the sand trap is supplied by an integrated compressor (part of the unit).

Parameters:
Compact unit
Design: exterior with heated aboveground part for year-round operation at -25 °C, inc. a rotary screen with an integrated dewatering of screenings (minimum required input dried matter of screenings 40 %), elongated aerated trap of sand and fats with a compressor, complete control and electric switchboard with automatic control of the unit operation on the principle of different levels
Material: stainless steel (corresponding to ČSN 17 247)
Parameters: Qmax = 30 L/sec
Pore width: e = max. 6 mm (rotary screen)

The integrated unit includes the following conveyors:
Screw conveyor for screenings and fats removing dewatered screenings together with fats from the rotary screen to a container.
Min. Ø screw 250 mm
The conveyor shall be fitted with a discharge with approx. a 2 m long swing chute (adjusted at installation), made of class 17 steel.
Design: for exterior (insulated with a heating cable).
Incl. supports and anchoring material

Screw conveyor of sand removing dewatered sand from the sand trap (part of the compact unit) to a container.
Min. Ø screw. 250 mm
The conveyor shall be fitted with a discharge with approx. a 2 m long swing chute (adjusted at installation), made of class 17 steel.
Design: for exterior (insulated with a heating cable).
Incl. supports and anchoring material

Requirements on the switchboard:
Location: next to the compact unit
Power supply: with a cable from appropriate technological distributor
Design: plastic switchboard resistant to UV radiation

03/12/18

Voltage: 3+PEN, 400/230 V, 50 Hz ~, TN-C
1+PEN, 230 V, 50 Hz ~, TN-C
2 24 V DC PELV
Min. protection: IP 54/20
Minimum switchboard equipment:
- Outlets for the supply and control of technology
- Main switch
- Internal heating, ventilation, and lighting
- Automatic or manual mode control
- Failure signalling and reporting
- Power consumption measuring
- Operating hours counter
- Incl. frequency converters
- Design: cabinet-type switchboard
- In case of a failure, all conditions are provided for a safe automatic shutdown of the technological equipment
- Incl. a local control system
- Application software for the whole line
- Communication card for industrial-protocol communication with the WWTP control system

The delivery must include all connection cables between the switchboard and the unit.

Automatic service water pressure station
Function: supplying the WWTP with service (operating) water. Biologically treated wastewater from the WWTP discharge shall be used for this purpose.
Parameters: Q acc. to the Contractor's specific design, p_{min} = **6 bar** (activating pressure)
Description: The unit shall be situated in a separate structure. Intake piping shall open to a treated wastewater discharge channel behind the final settling tanks (behind the UV outflow disinfection structure). The intake piping incl. a suction basket is not part of the machinery delivery (construction delivery).
The station must be capable of working even with a negative pump lift.
The automatic station shall include at least the following:
- Three pumps and complete accessories, incl. the switchboard
- 10 bar pressure vessel with the min. capacity of 1,000 litres
- Dry run protection – electronic protection in the control box (blocking the pumps when intake piping and pumps are filled with air and output decreases). Level measuring shall be also installed in the intake pit (not included in the station delivery), which shall send a signal through the control system when the level drops below the minimum level, and the station will be deactivated.
- Filter on the delivery with the required filtering selectivity of 200 micron
- All other necessary accessories

Mechanical sludge dewatering automatic line
Description:
Dewatering of stabilised sludge from the municipal WWTP with the addition of a suitable flocculant type which shall be put to a test when the unit is put into operation.

Parameters:
Weight of stab. sludge dried solid content to be dewatered: 375 kg/day
Total design input dried solid content: approx. 20 kg/m^3

03/12/18

Total input dried solid content range:	15–30 kg/ m^3
Stabilised sludge volume:	21 m^3/day
Organic substance content in stabilised sludge:	approx. 70 %
Stabilised sludge temperature:	3–25 °C
Line operating output (recommended):	**4-6 m^3/hr**
Total output dried solid content:	**min. 25 %**
Flocculant consumption:	max. 10 kg/ton dried solid content

Minimum required scope of the delivery:

1 pc **Decantation centrifuge**

1 pc **Dewatering line control panel**
Provision of automatic operational of the dewatering line in the automatic or manual modes, incl. start-up and shutdown of all parts of the line, flushing, failure detection, and operation statuses indication
Start-up panel (motor switchboard):
- Main switch, fuses, ammeter
- Control system
- Activity indication
- Separated switchboard cooling – air/air exchanger preventing the hydrogen sulphide effects
- Switchboard cabinet
- Dewatering line safety shutdown
- Frequency converter for centrifuge activity/regulation
- Frequency converter for the feeding spindle sludge pump
- Frequency converter for the flocculant pump

The switchboard (line's control automatic device) shall be connected to the superior WWTP control system through Profibus DP communication.

1 +1 pc (stock reserve)
Single-spindle horizontal sludge pump
Flow: acc. to the Contractor's specific design
Delivery pressure: min. 3 bar
Material:
body and flanges: grey cast iron acc. to DIN 0.6025
rotating parts: chrome steel acc. to DIN 1.4021
rotor: quenched tool steel acc. to DIN 1.2436
stator: SBBPF (perbunan)
Drive: 400 V, 50 Hz. The motor shall be equipped with thermistors in the winding (3 PTC) and designed to cooperate with the frequency converter.

1 pc **Overpressure pump protection**

1 pc **Macerator**
Working substance: stabilised sludge with 1.5-3 % dried solid content, average 2.0 %, temperature 3-40 °C
Flow: acc. to the Contractor's specific design
Motor: 400 V, 50 Hz

03/12/18

1 pc **Electrically-driven inter-flange closing knife gate valve**
DN150/ PN10
Max. closing time 20 sec
Possible manual control, position indicator

1 pc **Automated flocculant station**
In block arrangement. Complete equipment for the preparation and dosing of the flocculation solution with automatic process control.
Output: acc. to the Contractor's specific design

Main parts:

- Preparation tank
- Storage tank
- Flocculant dosing device with a heated heating cable
- Flocculant storage container
- Slow-speed stirrers
- Control switchboard, power and communication connection to the main switchboard
- Data transfer: operation and combined failure, loose flocculant minimum, prepared flocculant minimum, (further transfer to the control system)
- Electromagnetic valve, pressure switch, and pressure regulator
- Connection cables between the flocculant automatic station switchboard and connected devices of the flocculant automatic station
- Limit measuring of the loose material container level
- Limit measuring of the dissolved flocculant level

1 pc **Flocculant station service platform**
Platform min. 600 x 600 mm, stairs and railings, stainless steel (AISI 316)

1 pc **Single-spindle horizontal flocculant dosing pump**
Flow: acc. to the Contractor's specific design
Delivery pressure: min. 3 bar
Material:
body and flanges: grey cast iron acc. to DIN 0.6025
rotating parts: Cr-Ni-Mo stainless steel acc. to DIN 1.4571
rotor: Cr-Ni-Mo stainless steel acc. to DIN 1.4571
stator: EPBPF (EPDM, ethylene propylene)
Drive: 400 V, 50 Hz. The motor shall be equipped with thermistors in the winding (3 PTC) and designed to cooperate with the frequency converter

1 pc **Induction flowmeter** for measuring the input sludge quantity
Connection: min. DN 40, PN 16
Lining: rubber
Power supply: 230 V, 50 Hz

1 pc **Induction flowmeter** for measuring the dosed flocculant quantity
Connection: min. DN 25, PN 16
Lining: PFA
Power supply: 230 V, 50 Hz

l 03/12/18

1 pc **Dewatered sludge screw conveyor – inclined**

Removal of dewatered sludge from the centrifuge to a container

Medium:	dewatered sludge, 25-35 % dried solid content, temp. 5–40 °C
Quantity:	acc. to the Contractor's specific design
Length	min. 6 m (acc. to the Contractor's specific design)
Inclination:	approx. 15°
Chute width:	min. 260 mm
Material:	chute – stainless steel with plastic lining
	spindle-less screw – class 11 steel
Drive:	400 V, 50 Hz

External part of the conveyor must be provided with thermal insulation and a heating cable.

Accessories:

- Collecting hopper
- Flexible connection to the solids output from the centrifuge
- Supports
- Inspection lid

1 pc **Electromagnetic valve on service water piping**

For flushing the centrifuge
Working pressure 0–1 MPa

1 pc **Electromagnetic valve on service water piping**

For flushing the dewatered sludge screw conveyor
Working pressure 0–1 MPa

1 pc **Service platform for the centrifuge**

If required, dimensions shall be determined by the Contractor.
Stairs and railings, material – stainless steel (AISI 316)

1 set **Flexible connection**

Incl. stainless-steel fasteners

- Between the centrifuge (dewatered sludge output) and the channel conveyor
- On the filtrate output from the centrifuge – incl. sampling fittings
- On the sludge input to the centrifuge
- On the flushing water inlet to the centrifuge
- On the flushing water inlet to the sludge screw conveyor
- On the flocculant input to the centrifuge

1 set **Other items**

Description: all other items not listed above and necessary equipment and works for the realisation of the fully automatic line of the mechanical sludge dewatering.

Quantity: 1 complete line

Piping, valves and auxiliary construction material for individual PS's

Description:

The piping is designed for the transport of individual operation media within the technological units.

Structural design:

The piping shall be welded; assembly joints shall be flanged or threaded. The location of valves, flowmeters, and fittings, and the connection to pumps and equipment shall be determined by the Contractor upon the Contractor's design documentation.

03/12/18

Materials:
Generally, all parts of the equipment must be made of materials resistant to the effects of the environment in which they are installed. All piping within the Danilovgrad WWTP shall be made of class 17 stainless steel. Service and potable water piping shall be made of plastic. Service water piping in the automatic station structure shall be made completely of class 17 stainless steel. All stainless-steel structures shall be pickled and passivated.

Delivery scope:
This item includes the delivery and assembly of complete piping (incl. valves), adequate surface finishes, appropriate tests, and all other works and costs required for its installation and putting into operation.

A) Class 17 stainless steel piping (17 240)
Min. pipe wall thickness:

Air piping up to DN150	– 2 mm
Air piping over DN150	– 3 mm
Water, sludge piping up to DN150	– 3 mm
Water, sludge piping over DN150	– 4 mm

Includes: Piping, flanges, flange joints, fittings, bends, reducing pieces, T-pieces, compensation pipes, pipe supports, auxiliary construction material, anchoring material, and other material not listed above

B) Plastic piping (PP, PVC)
Includes: Piping, flanges, flange joints, fittings, bends, reducing pieces, T-pieces, compensation pipes, pipe supports, auxiliary construction material, anchoring material, adhesives, and other material not listed above

C) Fittings:
Suction baskets
Filters
Piping noise dampers
Locking adjustable connectors
Closing knife gate valves – always to be used on sludge!
Closing valves
Backflow valves
Backflow ball valves
Ball cocks
Three-way valves
Other small fittings

D) Labels and tapes indicating a medium and its flow direction in the piping
Piping shall be marked with labels from self-adhesive foil, indicating the type of medium and its flow direction. The minimum size of the labels is 52 x 190 mm. The labels shall be made as either one-way or two-way according to the flow direction of the medium.

Coatings
Scope: all coatings required for the Work realisation
Description:
Piping and equipment made of class 17 steel, galvanised steel, and plastic shall not have any surface finished. If necessary, coatings of machinery with factory-applied surface finish

l 03/12/18

shall be repaired. Piping, structures, and equipment made of class 11 steel shall be provided with surface finish (coating) as specified below. Thermally insulated piping shall be provided with a coating consisting of a primer and interlayer.

Environment – underwater
Coating system A

Surface preparation:	sandblasting to SA 2.5 level or mechanical derusting to ST 3 level (acc. to ISO 8501)
Prime coat:	100 µm, 1-2 layers, epoxy coating with high solids content
Top coat:	250 µm, 1-2 layers, epoxy tar hardened with polyamide

Environment - exterior, inside buildings
Coating system B

Surface preparation:	sandblasting to SA 2.5 level or mechanical derusting to ST 3 level (acc. to ISO 8501)
Prime coat:	100 µm, 1-2 layers, epoxy coating with high solids content
Interlayer:	shade similar to the top coat, 80 µm, 1-2 layers, epoxy coating with high solids content.
Top coat:	shad acc. to the medium, 50 µm, 1 layer, aliphatic polyurethane, high-gloss top coat

The thickness of individual coating layers shall be checked by a non-destructive method with the use of a coating thickness measuring instrument.

Thermal insulation
Basic requirements on insulation:
All equipment and piping installed in exterior must be capable of normal operation at temperature as low as -25 °C. At the same time, they must withstand extreme frosts below the given temperature without being damaged. Equipment and piping, in contact with which the personnel may get burnt, must also be insulated.

Minimum required scope of insulation:

A) Equipment to be thermally insulated:
- Mechanical pre-treatment compact unit incl. removal conveyors
- Screw conveyor for transporting screenings and fats
- Screw conveyor for transporting sand
- Station for receiving collected wastewaters
- Ferric sulphate dosing station
- Screw conveyor for dewatered sludge (external part)

B) Thermally insulated piping:
- Inflow and outflow piping from compact units of the mechanical pre-treatment automatic line, incl. the heated cable
- Air distribution piping in the activation blower house

03/12/18

Minimum required thickness of insulation:

DN [mm]	Min. size [mm]
up to DN 20	≥ 20
DN 20 to DN 35	≥ 30
DN 40 to DN 80	≥ DN
DN 100	≥ 80
over DN 100	≥ 80

C) All other items not listed above which should be insulated
- To meet the requirements of occupational health and safety acc. to valid regulations.

4.4. PARTICULAR REQUIREMENTS – ELECTRICAL AND SCADA PART

4.4.1. Recapitulation of existing situation and required scope of works

The new WWTP Danilovgrad shall be built "on a greenfield site".

The construction of the new WWTP is planned to be realised in two stages:

Stage 1 – construction of WWTP for the capacity of 6,000 PE

Stage 2 – completion of construction of WWTP for the capacity of 12,000 PE

4.4.2. Common requirements on electrotechnical works

4.4.2.1. Basic technical data

Power distribution system

Power distribution system shall operate at the following voltages:

High voltage (HV):

3 35 kV AC, 50 Hz

3 22 kV AC, 50 Hz

3 10 kV AC, 50 Hz

Low voltage (LV):

3+PEN, 400/230 V AC, 50 Hz, TN-C

3+PEN, 400/230 V AC, 50 Hz, TN-C-S

3+N+PE, 400/230 V AC, 50 Hz, TN-S

1+N+PE, 230 V AC, 50 Hz, TN-S

03/12/18

Extra low voltage (ELV):

- 2 24 V AC SELV, PELV
- 2 12 V AC SELV, PELV
- 2 24 V DC SELV, SELV
- 2 12 V DC SELV, SELV

4.4.2.2. Standards

Used materials and the design of construction parts as well as the final supplied equipment shall comply with valid Montenegro standards, EN's and ISO standards, or with specifications of CENELEC. The standard or specification with the most strict requirements shall be the binding one.

4.4.2.3. Protection for safety - Protection against electric shock

Protection against electric shock shall be designed in compliance with the requirements of IEC 60364-4-41.

4.4.2.4. Protection against atmospheric and operating overvoltage

Protection against atmospheric and operating overvoltage shall be designed in compliance with EN 62305-1 to EN 62305-5 standards.

Protection against lightning stroke into aboveground parts of structures shall be designed within the electrical installation of civil part. It shall consist of equipped and random interceptors. The interceptors shall be connected to the earthing system.

Protection against overvoltage shall consist of overvoltage protectors of LPT1 to LPT3 classes situated in individual switchboards and at protected devices.

4.4.2.5. Power Factor Correction

Reactive energy correction shall be shared for the whole WWTP incl. electrical installation of civil part, in the form of an automatically operated compensating switchboard.

4.4.2.6. Earthing and equipotential bonding

Earthing

A joint earthing system shall be constructed within the WWTP premises, consisting of earthing of individual structures. Earthing devices of individual structures shall be interconnected, thus forming a network covering the whole WWTP.

Earthing of individual structures shall be made with foundation and perimeter earth devices or their combination. The earthing shall serve also as protection against lightning.

The foundation earth device shall be made of galvanised-steel strip with the min. profile of 120 mm^2, laid in foundations of selected structures; the perimeter earth device all be made of galvanised-steel strip with min. profile of 120 mm^2, laid in ground.

Earth inlets shall be connected through test terminals to allow the earthing system resistance to be measured.

03/12/18

The earthing system shall be made in compliance with IEC 60364-5-54.

Equipotential bonding

A new main protective bus-bar shall be mounted on the wall inside each structure.

A protective terminal block (bus-bar) of switchboards, earth inlet of a new earthing system, and main equipotential bonding shall be connected to this bus-bar.

The structure shall be earthed with a new earthing system. This system shall be made with an earth strip FeZn 30x4 mm laid in a trench around the pumping station structure (approx. 1 m from the structure). The peripheral earthing shall be completed with another earth connector - an earth strip FeZn 30x4 mm laid in a trench of the LV connection, approx. 25 m from the structure.

The main equipotential bonding shall be made with an earth strip FeZn 30x4 mm laid around the structure perimeter, on supports in the walls. All metal pipes inside the structure, metal structural parts, if within reach at normal usage, and metal concrete reinforcement (if accessible and reliably connected) shall be connected to this strip.

Supplementary equipotential bonding shall include all non-live parts of fixed devices accessible to touch and foreign conductive parts incl. main metal concrete reinforcement (if feasible). The equipotential bonding system must be connected with protective conductors of all devices including sockets.

Equipotential bonding shall be made in compliance with IEC 60364-4-41 and IEC 60364-5-54.

4.4.2.7. External influences

Within the project preparation, the Contractor shall provide the elaboration of the "Report on identification of external influences", containing the identification of external influences occurring in individual spaces. The identification of influences shall be performed in compliance with IEC 60364-5-51.

All electrical devices shall be designed and supplied to comply with external influences in the place of installation, both in terms of their proper functioning and providing reliability of safety measures.

4.4.2.8. Construction of electrical installation

The whole electrical installation shall be realised according to valid standards. The ingress protection rating of electrical appliances, switchboards, and devices must comply with external influences and qualification level of personnel providing operation and maintenance of electrical equipment.

The ingress protection rating (IP) of electrical instruments and equipment must meet requirements give by external influences according to IEC 60364-5-51.

The minimum required ingress protection rating of electrical instruments and equipment:

In spaces with AD1 occurrence - IPx0

03/12/18

In spaces with AD2 occurrence - IPx2

In spaces with AD3 occurrence - IPx3

In spaces with AD4 occurrence - IPx4

In spaces with AD5 occurrence - IPx5

In spaces with AD6 occurrence - IPx6

In spaces with AD7 occurrence - IPx7

In spaces with AD8 occurrence - IPx8

In spaces with AE1 occurrence - IP0x

In spaces with AE2 occurrence - IP3x

In spaces with AE3 occurrence - IP4x

In spaces with AE4 occurrence - IP5x, IP6x

In spaces with AE5 occurrence - IP5x, IP6x

In spaces with AE5 occurrence - IP6x

In exterior - IP54

Cable passages through walls, floors, ceilings into various spaces shall be sealed against water penetration and with a fire partition.

4.4.2.9. Description of control

The construction of all devices shall enable them to be operated in both manual and automatic modes. The operation mode selection switch and control and signalling elements shall be located on the control box situated close to the equipment.

4.4.2.10. Required cabling design

Electrical installation of the HV level (35 kV, 22 kV, 10 kV) shall be made with single-core cables with copper or aluminium core, bare exterior lines with steel AlFe ropes.

Electrical installation of the LV level (400 V AC, 230 V AC) shall be made with cables with copper or aluminium core and plastic cover – power cables with core profiles up to 16 mm^2 shall be always with copper cores, cables with core profiles over 25 mm^2 may be with copper or aluminium cores. Cables for drives supplied from frequency converters shall be shielded of concentric. Signal and control cables shall be of a shielded type with copper cores and plastic cover.

Electrical installation of the ELV level (up to 24 V AC/DC, 12 V AC/DC) shall be made with cables with copper cores and plastic cover. Communication cables shall be with twisted pairs.

Communication cables for communication between individual PLC's and between PLC and the dispatching centre shall be with optical fibres, with at least two reserve fibres in each cable.

l 03/12/18

As regards the PLCs installed in one building object it is permitted to establish communication also via metallic cables, providing that the baud rate is adequate.

Cables of the LV level (400 V AC, 230 V AC) must be laid separately from cables of the ELV level (up to 24 V AC/DC, 12 V AC/DC) in separate pipes, protection pipes, and troughs, or in one trough and separated with an earthed metal partition.

Cables of the "Heavy current distribution" part shall be laid separately from cables of the "Instrumentation ad Control (I&C)" and "Automatic control of technological processes (ACTP)" parts in separate pipes, protection pipes, and troughs.

Inside the structures, the cables shall be laid in galvanised-steel cable troughs coated with plastic lacquer, in an environment with increased aggressiveness in stainless-steel troughs. Outside the structures, the cables shall be laid in stainless-steel cable troughs.

From troughs to individual devices the cables shall be laid in flexible or rigid plastic wiring conduits resistant to UV radiation.

In the ground the cables shall be laid in protection pipes, exceptionally directly in the ground. These cable routes shall be made from plastic corrugated double-walled rigid and flexible protection pipes fixed with spacing holders. The minimum inner diameter of the protection pipes must be 100 mm. Under communications the protection pipes shall be concrete-encased. In route bends and in sections longer than 25 m cable shafts shall be installed.

In devices with their own cable (e.g. submersible pumps) this cable shall end in the terminal box located close to the device.

All passages of cables and cable routes shall be sealed against penetration of contaminants, water, and moisture. In spaces containing gas as a medium, passages shall be gastight. In boundaries of two fire compartments cables shall be sealed with fire stoppers.

All steel supporting structures of cable routes must be protected against corrosion by hot-dip galvanising and plastic coating.

4.4.2.11. Cable troughs

Within technology and the WWTP premises cables shall be laid in cable troughs.

Cable troughs shall be made of non-perforated or perforated sheet-steel, fitted with lids, mounted to assembly profiles, supports and cantilevers.

Troughs shall be provided with inner partitions to separate cables of different voltage levels.

Individual parts of the cable troughs shall be made of galvanised sheet-steel. All troughs must be free of sharp edges which could get in contact with conductor insulation. Any screws and other fastening elements must be prevented from damaging insulated conductors or cables. Connecting individual parts together shall be made with couplers and bolts with fan-shaped washers placed below bolt heads and below nuts.

Cable troughs and lids shall be shortened to non-standard lengths during assembly by shearing and cutting. Horizontal sloping of a cable route shall be made by notching a trough sidewall to create the necessary route direction. Sharp edges formed in this way must be

03/12/18

freed of sharp burrs and then coated with anticorrosion protection of the cut section by a zinc spray and hemmed with an edge protector.

Diversion of a cable from the route shall be made by cutting-open or interrupting a trough, with subsequent hemming with an edge protector, or by using a cable terminal, or by running the cable out of the trough without a lid.

In order to ensure sufficient resistance to corrosion regarding considerable environment aggressiveness, cable troughs (all parts incl. lids) intended for interior assembly shall be **made in the form of galvanised-steel troughs coated with powder lacquer** (not only on their outside, but completely). Cable troughs (all parts incl. lids) intended for exterior assembly shall not be made of galvanised steel, but **completely of austenitic chromium-nickel stainless steel** (AISI304).

4.4.2.12. Wiring conduits

Flexible or rigid plastic pipes with min, medium mechanical resistance, intended for installation on the surface and below plaster, suitable also for assembly inside hollow walls, partition walls, and concrete. Resistant to UV radiation.

Flexible or rigid steel pipes with high mechanical resistance, hot-dip galvanised, with high resistance to corrosion – category 4.

4.4.2.13. Relocation of MV power line

Relocation of the existing overhead MV power line to be lead above the future WWTP site shall be the responsibility of the Employer. The relocation is to be carried out in accordance with the requirements of the power distribution utility.

4.4.2.14. Connection to MV power distribution mains

The WWTP shall be linked via a MV overhead line to the 10 kV power distribution mains situated in a close vicinity to the future worksite area. The connection point is to provide for adequate power output. The line shall be **dimensioned in a way to meet the loads specified for the Stage 2 of the WWTP construction works.** The overhead line will be terminated at a power line support pole. The pole will incorporate a cable down-lead with a switch disconnector. A MV cable from the pole will be brought into a new substation. The latter is an above-ground iron-concrete monolithic or bricked structure with at least three rooms servis to accomodate MV switching station, cubical type switchboard and LV substation.
The connection to the MV distribution mains shall meet the requirements of the power distribution utility.
Requirements on the technology part of the substation - see the "Technology part"
Requirements on the design of the MV line and cabling system - see "Required Cabling Design"

03/12/18

4.4.3. Requirements on "Transformer station"

A new transformer station shall be constructed for supplying the WWTP with electric power.

4.4.3.1. Building part

The new transformer station shall be an aboveground reinforced-concrete monolithic or masonry structure, divided inside to at least three rooms: HV-switchboard room, transformer vault, and LV-switchboard room.

The transformer station shall be equipped with electrical installation of civil part, including interior and exterior lighting, socket wiring, earthing and equipotential bonding, and lightning conductor.

4.4.3.2. Technological part

The technological part of the transformer station shall consist of a HV switchboard, transformer, LV switchboard (WWTP main distribution switchboard), and connecting cables.

The technology part shall include also invoicing metering of consumed electric power. The electric meter switchboard connection shall be executed in compliance with the distribution company requirements.

HV switchboard, LV switchboard (WWTP main distribution switchboard), connecting cables and Transformer shall be dimensioned to load in Stage 2 of the WWTP construction.

The HV-switchboard shall be a high-voltage distribution switching block with SF6 technology, from one of the world leading manufacturers.

LV-switchboard (WWTP main distribution switchboard) requirements – see "Main supply distribution".

The technology part shall include also equipotential bonding of technological devices.

4.4.4. Requirements on "Main supply distribution"

4.4.4.1. WWTP main distribution switchboard

The transformer output shall be drawn into the WWTP main distribution switchboard.

The WWTP main distribution switchboard shall be dimensioned to load for Stage 2 of the WWTP construction.

On the switchboard inlet shall be multifunctional digital apparatus for operating measuring electric parameters (voltage: U1, U2, U3, U12, U23, U13; current: I1, I2, I3; power: P, Q, S (kW, kVAr, kVA); frequency f; consumption E (kWh, kVArh)) and indicating them on the display and transmitted to the SCADA system.

The main distribution switchboard shall include outlets for switchboards deployed in the area of WWTP.

4.4.4.2. Automatic Power Factor Correction

Fully automatic power factor correction is required.

03/12/18

If frequency converters are used, the correction must be protected against the effects of higher harmonics.

4.4.4.3. Main power supply cables

Output from the WWTP main distribution switchboard shall be transmitted to switchboards deployed in the area of WWTP through main power supply cables.

These cables shall be plastic with copper or aluminium cores.

4.4.5. Requirements on "Heavy current distribution"

The WWTP technology shall be divided to relatively separate technological parts with bonds between each other. Each such separate technological part or group of technological parts shall be connected from a separate technological power switchboard.

4.4.5.1. Power switchboards

The power switchboard inlets shall contain a multifunctional digital apparatus for operating measuring electric parameters (voltage: U1, U2, U3, U12, U23, U13; current: I1, I2, I3; power: P, Q, S (kW, kVAr, kVA); frequency f; consumption E (kWh, kVArh)) and indicating them on the display and transmitted to the SCADA system.

The technological switchboards shall contain outlets for connecting and controlling individual drives.

The switchboards shall be located in switchboard rooms, with the minimum protection of IP40, after door opening with min. IP20.

4.4.5.2. Frequency converters

Frequency converters shall be located in the power switchboards or on the switchboard room walls.

Frequency converters shall be controlled trough an industrial communication protocol.

Frequency converters for supplying drives without installed reserve shall be equipped with a bypass.

Each drive shall be connected to its own converter. One converter must not be used for connecting more than one drive (not even when one of them is a reserve drive).

Suppressing filters and commuting chokes shall be installed on the frequency converters supply. Motor chokes shall be installed on outlets from the frequency converters. Drives shall connected to the converters with plastic shielded cables with copper cores.

Frequency converters shall be fitted with communication cards for communication with a superior control system.

Frequency converters shall be fitted with operator' panel for local displaying and entering parameters.

All frequency converters shall be from one manufacturer, from one type range if possible.

03/12/18

Required minimum technical parameters

- Frequency converters shall be supplied including accessories and inlet (network) choke, input EMC filter of min. class A, intercircuit DC choke, and outlet sine filter or motor choke.
- Four-quadrant frequency converters shall always be used.
- The minimum efficiency of the converters shall be 97.5% at nominal current and voltage.
- Electrically separated power and control circuits, printed circuit boards lacquered.
- Motor protection: thermal protection based on continual calculation of I2t with respect to actual running speed, saving motor temperature conditions upon frequency converter being switched off, protection against output phase outage, thermal insulation with the use of PTC sensors in the motor winding.
- Minimum protection IP20 when installed inside a switchboard, IP40 when installed on switchboard room wall.

4.4.5.3. Soft starters

Soft starters shall be located in power switchboards or on switchboard room walls.

Soft starters shall be controlled with an industrial communication protocol.

All soft starters must be equipped with a bypass.

Each drive shall be connected to its own soft starter. One soft starter must not be used for connecting more than one drive (not even when one of them is a reserve drive).

Soft starters shall be fitted with communication cards for communication with a superior control system.

All soft starters shall be from one manufacturer, from one type range if possible.

Required minimum technical parameters

- Electrically separated power and control circuits, printed circuit boards lacquered.
- Minimum protection IP20 when installed inside a switchboard, IP40 when installed on switchboard room wall.

4.4.5.4. Secondary switchboards

Secondary switchboards shall provide the supply and control of technological devices delivered as a unit.

Switchboards shall be included in the equipment delivery, they shall communicate with the WWTP control system through an industrial communication protocol.

If a secondary switchboard is not located directly on the device or close to it, a control box shall be installed close to the device.

ℓ 03/12/18

Switchboards placed within the technology shall be plastic, with the minimum protection of IP54, after door opening with min. IP20.

4.4.5.5. Control boxes

control boxes shall be located close to the devices.

Required minimum technical parameters

- Plastic control box resistant to UV radiation
- Minimum protection: IP 55/20
- Control boxes situated outside shall be sheltered with a protective roof.

4.4.5.6. Backup power supply

Backup power supply must be provided to be used when outage of supply from HV connection or breakdown in the transformer station occur.

The backup power supply output must ensure at least limited operation of the WWTP technology when water flow through the WWTP is ensured and activated sludge is kept alive.

The backup power supply output shall ensure full operation of the WWTP technology, as well as after the transfer to PS Mareza full operation of the PS Mareza (equipped with one pupm Jastrebac VPN 250 – 2/R, Pn=132kW, rpm=1450 min-1).) The backup power supply must be capable of maintaining this operation permanently for an unlimited time.

The backup power supply shall be mobile, fitted on a carriage homologated for public communications.

Preparation of the backup power supply, its connection to the WWTP power network, and putting into operation must be fully automatic or performable by one person. Its operation after being started must be fully automatic.

4.4.6. Requirements on "Instrumentation and Control (I&C)"

Instrumentation for measuring non-electric quantities shall be installed in the WWTP technology. Measured values shall be displayed on converters in the places of measuring and transmitted to the SCADA system.

The WWTP technology shall be divided to relatively separate technological parts with bonds between each other. Instrumentation from each such separate technological part or group of technological parts shall be connected from a separate control switchboard).

The instrumentation supply shall be backed-up from the UPS with the minimum backup time of 120 minutes.

All the below-described devices are expected to be situated directly within the technology and are required to operate long-time reliably in local conditions. The following conditions are usual for the WWTP technologies:

- Ambient temperature: -25 to +40 °C,
- Wastewater and sludge temperature: 0 to +60 °C

03/12/18

- High humidity, in winter risk of vapour condensation in instruments
- Aggressive vapours of various concentrations present in structures with the occurrence of wastewater and sludge in all treatment stages,
- All instrumentation must be dismountable and serviceable without the necessity to stop or reduce the technological process,
- All instrumentation, evaluation units, controllers, and display units located in exterior must be provided with a protective shelter against atmospheric conditions.

Water level measuring

Continual water-level measuring shall be performed preferably with contactless instrumentation – e.g. ultrasound detectors or radar detectors. If contactless measuring cannot be used, contact measuring shall be used instead, e.g. with tensometers.

Limit water levels measuring shall be performed with floating and capacitance detectors. The minimum level shall block the pump operation, the maximum level shall signal an emergency water level.

Flow measuring

Measuring of water and sludge flow in piping shall be performed preferably with inductive flow meters shall, alternatively other devices may be used, e.g. ultrasound flow meters.

Measuring of flow in open troughs and channels shall be performed preferably with ultrasound detectors placed on measuring weirs and overflows, alternatively other instrumentation may be used, e.g. ultrasound flow meters.

Measuring of gas flow in piping shall be performed with vortex flow meters, thermal flow meters, and mass flow meters, alternatively other instrumentation may be used, e.g. ultrasound flow meters.

Measuring of flow on run-off must be performed as invoicing measuring.

Temperature measuring

Temperature measuring shall be performed with resistance detectors Pt 100 placed in pits, with an integrated transducer for output 4-20 mA.

Pressure measuring

Continual measuring of pressures shall be performed with pressure tensiometers with 4-20 mA output. Limit pressure values shall be measure with pressure switches.

Water analysis

The following principles and technologies shall be used for water analysis, if performed:

Measuring of oxygen concentration (O2) – submersible optical-based digital probes shall be used for measuring oxygen concentration. The probes shall include measuring of water temperature.

03/12/18

Measuring of nitrates concentration (N-NO3) – submersible photometric-based digital probes shall be used for measuring the concentration of nitrates.

Measuring of suspended solids concentration (TS) – submersible optical digital probes shall be used for measuring the concentration of suspended solids in aeration tanks.

Measuring of ammonia nitrogen concentration (N-NH4) – stationary analysers shall be used for measuring the concentration of ammonia nitrogen.

Measuring of phosphorus and phosphate concentration – stationary analysers shall be used for measuring the concentration of phosphorus and phosphates.

Measuring of water/sludge interface – ultrasound probes shall be used for measuring the water/sludge interface in secondary settling tanks.

Measuring of sludge concentration (SS) – optical-based digital probes to be installed inside piping shall be used for measuring the sludge concentration.

Automatic sampling – for automatic sampling, stationary samplers with vacuum collection system shall be used, freely programmable, with the number of collection bottles acc. to relevant legislation (replacement of bottles in the sampler 1x in 24 hours), bottle volume min. 1 l. The sampler must be equipped with independently regulated cooling and heating. Sampling control: acc. to time and event and manual sampling; flow sampling. At least one separate sampler on inflow and one separate sampler on WWTP outflow are required.

All probes and analysers for water analysis shall be connected to digital controllers which shall be connected to the SCADA system of the WWTP through industrial communication.

4.4.6.1. Control switchboards

Instrumentation of relevant technological unit or a group of technological units shall be connected from individual control switchboards.

Control switchboards shall also include a programmable logic controller (PLC) of the "Automatic control of technological processes" part.

The switchboards shall be situated in switchboard rooms, their minimum protection shall be IP40, after door opening min. IP20.

4.4.6.2. Overvoltage protection boxes

Individual instrumentation devices installed within the technology shall be protected with overvoltage protection boxes located at these devices.

The overvoltage protection boxes shall contain power line overvoltage protection, signal line overvoltage protection, and communication line overvoltage protection.

Required minimum technical parameters

- Plastic control box resistant to UV radiation
- Minimum protection: IP 66/20
- Control boxes situated outside shall be sheltered with a protective roof.

03/12/18

4.4.7. Requirements on "Automatic control of technological processes"

The WWTP technology system control shall be fully automated.

The automatic control of technological processes shall be made as a distributed multiprocessor system with interbonding between individual processors. These bonds shall be realised by mutual communication between individual processors.

The control system shall consist of programmable logic controllers (PLC) on the process level, and a dispatching computer with SCADA environment on the superior level.

4.4.7.1. New control room (dispatching centre) of the WWTP

The dispatching control of the Danilovgrad WWTP will include:

- All technology equipment and technology units which the WWTP consists of the WWTP
- All measuring points, measuring and control points and control points situated within the framework of the WWTP

Delivery includes: Mounting, connection, testing and debugging electric equipment.

Concept of dispatching control

The system of dispatching control will consist of two subsystems:

Process level

Programmable logic controllers shall be installed on the process level, programmable from the superior level.

Programmable logic controllers

The programmable controllers shall be of a modular design – each controller shall be fitted with its own source, processor, and peripheral units (cards of digital and analog inputs and outputs) inserted in the frame. Actuating devices and power elements shall be connected to output digital cards through cut-out relays, other signals and measured quantities shall be connected through overvoltage protection.

Each PLC will be fitted with a touch screen graphic panel of human machine interface (HMI), min. 12", enabling visualisation and control of individual technological devices, or a colour display with functional buttons. The PLC will support data logging in a database. Access to the data will be through a PC based application software delivered together with the PLC. Part of the delivery will be the "Development SW for PLC" and "Development SW for the HMI panel".

Controllers shall be equipped with the Ethernet communication interface for connection with other PLC and with the superior level. Controllers shall be equipped with a communication interface for industrial communication, for connection of frequency converters, MaR detectors, and PLC delivered as part of the technological equipment.

03/12/18

The PLC supply shall be backed-up from the UPS, with the minimum backup time of 180 minutes.

Control switchboards

PLC shall be installed inside control switchboards of individual technological units or a group of technological units.

The switchboard doors shall be provided with an HMI touch panel through which data can be entered to technological formulas for the control of a given part of the technology.

The switchboard doors shall include a HMI touch panel to be used for data entry into technology formulas for the control of a specific part of the technology equipment.

Subsystem of Central Control

The central control subsystem is based on a SW platform adapted for the control of a distributed system and the integration of SCADA application, for real-time industrial database and the server services (web portal). (SCADA programming – software for technology visualization, control and coordination, including establishing communication links).

The SW components shall run on four computers, two backup (redundant) servers (with one of them serving a "hot backup"), and two operator workstations. The HW structure designed in such a way provides for high reliability and the necessary redundance in terms of communication links and protection of archived data.

The SCADA application SW shall be capable of graphical presentation of the regulated equipment and be able to display the relevant process parameters, alarms and incident history, to graphically display both historical and real-time trends. The database shall include an integrated software tool to enable access and creation of messages on archived data.

Data archiving shall be done using industrial database SW with an autonomous mechanism for data logging depending on various criteria.

A software application shall be used to mediate communication between field devices (PLC) and the SCADA application.

Furthermore, a WEB server shall be used to enable the creation and displaying of web reports with real-time or archived data. The computers with the WEB client shall have access to the reports.

Communication between the various means at the control centre and remote worksites shall run through an industrial GSM router integrating the functions of firewall and switch in a single device.

The dispatching centre shall be provided with graphic output: network laser colour printers with scanners for printing: A4, A3+, min. 600 dpi, scanner, copier with automatic feeder, Ethernet, and industrial type of Ethernet switch with 12 ports.

The UPS shall be provided with auxiliary batteries to ensure unlimited operation of the server, switch, operator workstations and the router for at least 2 hours.

03/12/18

Visualisation SCADA system

The dispatching centre shall be equipped with an advanced system providing graphic visualisation of the whole technology condition, fault condition reporting, data and event archiving. Further, individual schemes, diagrams, trends of measured and operational quantities, etc. may be visualised graphically.

The program equipment shall be built on the SCADA/HMI system, installed on two servers and two operator's consoles, and shall work in a full redundancy mode.

Authorisation for access to the system shall be divided to several levels with various rights. Every operator may have his/her own login name, password, and set of permitted activities and rights.

The following are the main functions of the SCVADA system:

- Automatic on-line data acquisition from telemetric devices
- Pre-procesing of signals
- Display of important data in database in structured and classified manner
- Reports generation
- Possibility of identification and signalling of alarm systems

The system´s concept will provide for centralization or distribution of the subsystem to several hardware units.

For reliable operation, functions with appropriate redundancy will be planned which means that a failure of one of these functions on main station will not cause stopping the remote supervision process.

Modules used for communication with other subsystem or redundant unit have to utilize standard mechanisms for communication through programs which can be implemented locally or through LAN. Access of a customer must be enabled by password system.

SCADA application shall be based on software platform with unique structure i.e. client-server integrating subsystem/module of the following:

- information acquisition
- processing and monitoring alarm and occurrence
- control and management functions
- information record
- customer management
- information display
- creating and web base distribution of reports

09/12/18

Subsystem for information acquisition

Subsystem has to provide data acquisition from supervised facilities according to different standard protocols, periodically or per some occurrence.

Subsystem for processing and monitoring alarm and occurrence

The possibility of alarm classification is required in terms of priority and their storage in predefined base which has the option of creating chronological reports.

Subsystem for activation of information

Relevant process values have to be recorded in real-time database, periodically, at request, or per occurrence; module has to provide data storage for immediate access, for off-line analysis as well as for their permanent recording in backup unit. Each record has to be accompanied with suitable timing. System has to support the existence of independent buffer for disasters with the possibility of replication of data into real-time base. Access to recorded data has to be possible from all client stations.

Subsystem for customer management

Access of a customer must be defined by password system with hierarchical structure of privileged customers.

Subsystem for information display

This subsystem must have exact location of facilities, hierarchical structure of display, advanced dynamic presentations, possibility of usage of graphic symbols, menu, dialogue of windows and video links; also they have to be chronologically supported and real-time trend displays of analog values. Trend displays have to support mechanism of trends and scroll on time line, as well as field which display current value dependent on position of cursor.

Alarm display has to contain scroll list of alarms; reports must state information on present operator, time of occurrence of alarm situation, time when it was identified and confirmed action as well as time when normal situations is established. Authorized customers have to provide by set up of alarm value through graphic object/interface within the application.

Subsystem for creation and web base presentation of reports

Subsystem provides access to real-time database and creation of various template reports in standard office environment. Reports can be generated at request, per occurrence or periodically. It is needed to foresee presentation of reports through web-portal being integral component of software platform.

Algorithms of technology control

The project of technology control algorithms shall include a detailed description of the operational method of individual technological devices, conditions of their starting/stopping, operation control parameters, mutual blocking conditions, etc.

03/12/18

The algorithm control project shall serve as the basis for the creation of an application software and visualisation.

The algorithm control project shall be submitted to the operator after the trial operation completion.

4.4.8. Requirements on "WWTP SCADA system"

SCADA - Supervisory control and data acquisition.

A dispatching centre shall be built for supervisory control and data acquisition from individual devices of the WWTP.

4.4.8.1. Supervisory control conception

The supervisory control shall consist of two subsystems.

Subsystem for data collection and local control

This subsystem shall consist of several devices situated in technology: local PLC and feeding system with UPS.

- Each PLC shall be fitted with a suitable HMI device – a colour touch panel or colour panel with functional keys. The PLC shall support data logging in a database accessible through a PC software application delivered together with the PLC.
- UPS shall be in an industrial version, equipped with relay outputs enabling remote monitoring: indication of a failure, battery power drop, and supply voltage loss.

Supervisory control subsystem

The supervisory control subsystem shall be based on a software platform adapted to the control of a distributed system and integration of a SCADA application, industrial real-time database, and server services (web portal).

Software components shall be installed to four computers, two servers and two operator work stations. The hardware structure designed in this way ensures high reliability and redundancy in terms of communication links and protection of archived data.

The software SCADA application shall provide graphic presentations of regulated devices and relevant process parameters, display of alarm and incident history, graphic display of historic and real-time trends. The database shall include an integrated software tool enabling access and creation of messages upon archived data.

An industrial database software with an autonomous mechanism of data logging according to various criteria shall serve for data archiving.

A software application mediating communication between devices in the field (PLC) and SCADA application shall be utilised.

Further, a WEB server shall be used, enabling the creation and display of web reports with real-time or archived data. Computers with a WEB client installed then shall have access to these reports.

l 05/12/18

4.4.8.2. Data transmission concept

The WWTP dispatching (control room) shall be located in an administrative building of the Danilovgrad WWTP. The control room will include two servers, a GSM router, two operator workstations with LED monitors (having a size of at least 24" diagonal, a LED IPS panel with 1920x1200 resolutions – 3 pcs), a wall installed monitor for co-ordination purposes (large monitor for SCADA and GIS, LED IPS videomonitor for wall mounting, of at least 55" diagonal, and the resolution of at least 1920x1080, narrow bezel design – 1 pc, UPS for power supply to the whole system and accessories.

Engineering solution used for data transmission

At the engineering level the communication will proceed using data transmission via the mobile operator network. Each object incorporated in the control systém (reservoirs, pumping and repumping stations, measuring points, measuring and control poins and control points within the water supply systém) will be equipped with a router to provide for data transmission via GSM/GPRS/EDGE/UMTS, and a control room (control centre) with router to provide for data transmission via GSM/GPRS/EDGE/UMTS/HSDPA.

The GSM/GPRS/EDGE/UMTS industrial router will be connected to a local PLC installed in the respective building object. The interconnection to PLC will utilize Ethernet protocol. The router and the PLC connected will be supplied with power from an UPS which shall ensure unlimited operation of the connected equipment for at least two hours.

The GSM/GPRS/EDGE/UMTS/HSDPA high-speed router in industrial design will be connected via the Ethernet to a local computer network (consisting from switch, Ethernet, server and two operation workstation). The server, switch, operator workstation and router will be powered from one or more UPS. The UPS will be equipped with auxiliary batteries capable to provide power to the connected equipment for at least two hours.

Server

The WWTP dispatching (control centre) shall be fitted with a server intended for collecting and archiving data from individual equipments included in the system and providing these data for the control and mutual coordination of the operation of these equipments.

Engineering scope: server + operation system (2pcs), incl. the SW for server – SCADA, data archiving SW and web server software.

Operator work stations

The server shall be connected through a local computer network to two workstations, including peripheries, operation system and the Office SW package. The workstations shall be equipped with SCADA operator software capable to process at least 1 500 variables, a SW for data readout from the archives, modules for creation and archiving of trends, and web client software.

03/12/18

Visualisation

Using the SCADA visualisation software, the operator will be able to display dynamic mimics of the whole WWTP. These mimics shall show all available information on the current conditions of individual equipments and system parts, such as the water-level height, operational status of pumps, pressure values, flow rates, failures, alarm reports etc.

The operator shall have access to data from the server archive and will be able to display them in the form of various tables, diagrams, overviews, development trends, etc.

Apart form the visualisation of the system current conditions and of historical data, the operator will be able to manually enter values of various variables, and thus to influence the technological process.

The WWTP Manager shall be able to have the technology visualised in the form of a "manager" client.

4.4.8.3. Required minimum functional properties of the SCADA system

- Data acquisition from the technological process and their mathematical and statistical real-time processing
- Display and control of the technological process in a comfortable graphic environment in the form of graphic charts, diagrams, trends, and reports
- Powerful multilevel system of alarms enabling quick identification of critical situations and providing detailed information to operators for decision-making
- System capable of providing real-time information to many users within the computer network environment
- Integrated, incident-controlled scripting language for algorithmic and sequential control
- Powerful archiving system ensuring three archiving levels (primary, statistical, and long-term archives), additional writing, and delayed data processing
- Monitoring system of alarms, operators' interferences, and error conditions
- Dealing with users access rights
- Integrated graphic editor with user-expandable libraries of graphic subjects enabling simple creation of graphic presentation charts
- Support of integration to an environment of office program applications for creation of output reports and data export
- Several types of user's consoles from full operator's console enabling system configuration (thick client) up to Web consoles (thin client) enabling full access to data within the Internet/Intranet environment

Presentation

All texts on monitors and all operator's commands shall be in the local language. The local alphabet shall be used on monitors and keyboards.

Situation of monitored and controlled structures shall be displayed in a suitable combination of graphic symbols of various shapes and colours with numbers and texts. The situation of a

02/12/18

given structure must not be shown on a display only in colours. Information displayed in colours must have shapes added to enable colour-blind persons to operate the system.

Analog signals which are not applicable (e.g. because being outside the 4-20 mA range), and calculated analog variables which are invalid shall be clearly marked.

Commands shall be issued in two steps; a command shall be valid only after "OK" is clicked by the operator.

The dynamic section of the screen must be capable of displaying at least 50 analog objects (analog variables with marked validity and monitoring of limit values), 50 binary objects (e.g. sectional quantities), or any linear combinations of these two object types. Within a system analysis the user shall elaborate a draft, submitting it to the Employer for approval, or modification. The draft shall contain image hierarchy, overall arrangement of image displaying, procedures for image displaying selection, all used symbols, colours, names, abbreviations, etc.

Signalling

Alarm signals shall be displayed in an order in which they arrive to the system. They shall be displayed and registered with a time pattern (time resolution 1 sec or shorter).

A severity level (min. 3 levels) and functional area shall be determined for individual signals.

All signals shall be registered in an alarm registration file which shall function as a periodic memory, enabling at least 5,000 signals to be kept.

The signal register and its selected parts shall be displayed on the monitor and printed. A selection criteria could be a time interval, signal type, functional area, marking, etc.

After printing a signal report on a black-and-white printer all information, displayed in colour or blinking on the monitor, must be legible.

Incident register

Incidents shall be registered with a time pattern (the same time resolution as for alarm signals).

Incidents to be registered shall include:

- All changes of binary process variables (e.g. pump starting/stopping, valve opening/ closing), program-controlled condition of changes in a process station (e.g. activation of sequential programs, transfer from one sequential program step to another, starting analog regulation between automatic and manual operation);
- Commands issued by the operator;
- Alarm signals registered in the alarm signal register.

The incident register shall function as a periodic memory, enabling up to 10,000 incidents to be kept.

Selected parts of the incident register shall be displayed on the monitor and printed in the same way as described above for the alarm signal register.

03/12/18

Analog data registration (trend system)

The system shall be provided with a trend registration system, registering every analog variable and every counter included in the system. It must be possible to register min. 200 analog variables and 100 counters.

The ASRTP must enable configuration of a trend database (i.e. adding and removing variables to be registered). Performing changes in the configuration must not terminate the collection of data for other variables which are registered. Analog variables, which are registered, shall be selected from an on-line database with 1-min intervals. These 1-min intervals shall be grouped into 15-min values (maximum, minimum, mean values), 15-min values shall be grouped to 1-hour, daily, and monthly values (maximum, minimum, mean values).

The calculation of the maximum, minimum, and mean values must be performed reliably even with one or more invalid or missing 1-min values.

History values of analog variables shall be saved for at least:

1.	1-min values	8 hours
2.	15-min values	72 hours
3.	Hourly values	365 days
4.	Daily values	18 months
5.	Monthly values	5 years

Counters which are registered shall be selected from an on-line database in 15-min intervals. These 15-min intervals shall be grouped in hourly, daily, and monthly values (accumulated values at the end of a relevant time interval).

History values of counters shall be saved for at least:

1	15-min values	72 hours
2.	Hourly values	365 days
3.	Daily values	18 months
4.	Monthly values	5 years

All values in the history database shall be expressed in SI units.

Curve display

It shall be possible to display and print graphic curves of variables as function of time, both from dynamic (on-line) and history (trend system data) databases.

It shall be possible to determine curves for at least six variables in one figure with individual scale for each curve. The curves shall be specified with numerical indication of displayed

03/12/18

variables acc. to a numerical indication system on the monitor and displayed in different colours. Zooming of selected time intervals shall be enabled.

Variables for curve images shall be loaded either from the trend system or the on-line database. After data from the on-line database are displayed, a time period up to 10 sec may be selected.

The curve images shall be updated in real time so that they can function as a multichannel recorder. This applies also to curve images representing history data from the trend system. Here, history and on-line values shall be transmitted continually.

It shall be possible to save pre-defined curve images and activate them when required.

Reports and summaries of states

It shall be possible to create reports with history values from the trend system. These reports shall contain standard reports (e.g. daily, weekly, and monthly reports), and also reports for special purposes. Calculated values shall be possible to be include in these reports. The delivery shall include descriptions of report elaborator's options for calculation and distribution, and report processing means.

The system shall create summaries of states which may be configured acc. to current requirements, for example:

- List of invalid analog signals
- Summary of devices switched to local regulation
- Summary of regulations with errors not fitting to a specified tolerance interval

Access rights

It shall be possible to specify access rights for every user according to an access level.

At least the following access right levels are assumed:

- Only displaying
- Displaying and command issuing
- Changing limit values, regulator parameters, etc.
- Configuring the system

Access rights shall be specified during the system analysis. The resulting configuration may differ upon the operators' requirements.

System reliability

A single error may not terminate data acquisition or cause a loss of alarm signals.

Printers

The system shall be equipped with an A4 printer for printing registers and reports, and an A3 printer for printing images and curves.

The printers shall use the national alphabet.

03/12/18

Reserve capacity

The SCADA system, when put into operation, shall dispose of a sufficient reserve capacity for 20% enlargement of the number of process variables.

This 20% enlargement shall be made by adding inlet/outlet modules to process stations, or by adding a new process station. It shall not require upgrading of processors or databases, enlargement of memory capacity, or upgrading of communication centre capacity.

4.4.8.4. Software

The SCADA system shall be provided with SW necessary for the technology control and visualisation, and SW licenses for the development and creation of application and visualisation SW.

Requirements on the program equipment of the dispatching system:

- IT support (Win 32, SQL, ODBC, OLE, COM/DCOM, OPC, TCP/IP, Internet/intranet)
- Transaction-functioning SQL database system
- Multiuser access
- Tools for algorithmic and sequential control
- Multilevel alarm system
- Automatic archiving of results of statistical calculations
- Support for delayed data processing in the archiving process
- Data export to table processor environment
- Open communication system
- Connectivity to other information systems

Minimum required SW configuration:

- Development SW for PLC*
- Development SW for operator's panels*
- Development SW for visualisation*
- Development SW for report printing*
- Visualisation SW for two redundant stations
- Visualisation SW for WWTP manager
- Application SW for PLC
- Application SW for operator's panels

** If the same development SW may be used for "Rehabilitation of sewerage" as for "Construction of WWTP", one shared license is sufficient.*

Source codes of the application SW shall be submitted to the operator after the trial operation termination.

l 03/12/18

4.4.8.5 Testing of ACSTP and SCADA

After creating the control algorithm of technology, the application software of PLC and HMI, vizualization of supervisory control and data acquisition (SCADA), and other application program functions shall be tested and to demonstrate the full functionality of the system and compliance with the requirements contained in this Tender dossier.

SCADA testing shall focus, beside other things, on the following:

Iindividual structures:

- Testing of software for technology control and local visualization (control algorithms)
- Checking the functionality of each input / output of each PLC and speed of display PLC input / output status changes on the HMI
- Checking the functionality of the control algorithms and ability to correctly respond to all operating states of technology.
- Checking and diagnostics of data connection to the control center (check connection speed, connection capacity, response time, etc.).
- Checking and diagnostics of data connection with follow-up objects (check connection speed, connection capacity, response time, etc.).
- Checking of the control algorithms autonomy of individual objects - if the data connection to the dispatching is not available, the control algorithms shall control the technology based only on available informations (for example peer-to-peer communication with follow-up objects) or should safely put the technology out of operation.
- Control algorithms optimization and tuning to avoid unnecessary network traffic.

At the dispatching (control centre):

- Checking of completeness and functionality of individual objects visualization (display of all detailed and updated informations of individual devices, machines and measured values).
- Checking the functionality of graphic presentations of governed devices and relevant process parameters, display of alarm and incident history, graphic display of historic and real-time trends.
- Checking the WEB server functionality.
- Checking the hardware functionality.

Training:

Contractor shall prepare a detailed manual, which shall include a detailed description of the work activities and procedures for workers with SCADA system at various work levels. In the manual shall also be given a detailed description of each feature and of all the controls of the program (program menu and toolbars).

Contractor shall prepare a detailed clear and graphic instructions for individual screens and visualization schemes editing and modifying, or the creation of new screens and visualization schemes.

03/12/18

Contractor shall perform detailed training for Employer's workers of all work levels who come into contact with SCADA system both in the field (at a remote structures) and in the office (an electro technician in the field, electro engineer, mechanical engineer, technologist, dispatcher, IT technician, manager etc.). (Manuals, trainings – see Volume III- The Requirements, document III – Technical specifications).

1 03/12/18

5. RECOMMISSIONING AND COMMISSIONING ACTIVITIES TO BE PERFORMED BY THE CONTRACTOR

5.1. Documents before the construction works commencement

5.1.1. General

The Contractor shall carry out all works upon the Employer's Tender Documents (TD). No additional documents elaborated by the Contractor may change the purpose and scope of the Works described in these Tender Documents. The drawings shall comply with requirements of standards and legislation valid at the time of design documents elaboration. Contractor's documents shall be approved by the Employer as well as by Engineer. All costs related to elaboration of the above Contractor's documents are included in the Tender Price.

In the case that Engineer requires changes and the Contractor does not agree with them, the Contractor shall send written notification to Engineer within seven days from receiving the Engineer's request for modification. In such case the Contractor shall again submit his drawing (drawings) and possibly also calculations to Engineer after the Contractor considered Engineer's requirements.

If during the Contract implementation and in compliance with its conditions a need arises to modify the design documents or to apply for new or modified permissions or approvals of authorised institutions for any activity carried out on the construction site (e.g. ensuring excavation permission, permission for temporary use of roads, permission to cross public roads, railways, water courses, to cut trees etc.) the Contractor shall be responsible for acquiring these permissions, licences, approvals, certificates etc. from authorised bodies or administrators/owners including preparation of relevant documents or designs. Before such works start, subject and scope of the documents or activity shall be again consulted and approved by the Employer and Engineer.

In course of the implementation the Contractor shall observe the laws, regulations and technical standards valid in Montenegro.

5.1.2. Tender offer

The Contractor shall assure to be fully informed about the location, accesses and conditions on the construction site; the knowledge shall not be obtained from these documents only. By submitting the offer, the Contractor confirms that he got acquainted with the construction site, its characteristics and scope as well as with the scope and type of Works which will have to be implemented upon the Contract, with transport distances, all aspects and risks of the Work and its operation and that he included this information to his technical and price offer.

In the offer, the Contractor shall reflect the fact that operation of sewerage system and WWTP, will be ensured by current operator during the construction phase. The Contractor shall coordinate his activities and seek every possibility to allow maximum range of current plants operation. The Contractor shall not limit current operator in fulfilling his duties and

03/12/18

ensuring the operation; the Contractor shall not prevent or reduce proper running of current equipment.

In the offer, the Contractor shall include all costs related to construction implementation and the course of the work, to social welfare of the staff, their occupational health and safety etc. in the scope fully covering all construction activities.

5.1.3. Occupational health and safety

Occupational safety on the construction site shall be governed by legal regulation declaring requirements on safety of work and technical devices in course of construction, assembly and maintenance works, during construction materials manufacturing, storing and handling and during works related with construction activities.

It is necessary that all reliable staff and workers directly involved in project elaboration and works consistently observe all OHS regulations and do not support efforts to facilitate some operations, should the facilitation jeopardize their health or health of other people. In their work they should consistently observe relevant regulations regarding occupational health and safety.

a) The Contractor shall be obliged to prepare "Occupational Health and Safety Plan" when elaborating the basic design for building permit. The document shall respect the appropriate valid regulations.

b) The works shall be carried out under full operation of some sewerage systems in the town of Danilovgrad. Within these works the Contractor shall elaborate "The Agreement on Creating OHS Conditions on Shared Working Site" which shall form the annex of the written Contract according to the relevant regulation after it is approved by the Employer.

c) We also warn the Contractor of some operations connected with increased danger of injury of his own workers, Employer's workers or public. Before any underneath listed dangerous activity starts, the Contractor shall submit "Safety / Methodical Declaration" for Engineer's approval and the works may only start after the Engineer's written approval is issued and recorded in the building log. The following operations pose serious danger to health which is why measures shall be accepted to decrease the hazards:

- Excavation works (e.g. timbering to prevent earth slide, underground works, fencing/enclosures, warning signs for pedestrians)
- Works at heights (e.g. falls, falling materials)
- Closed spaces (e.g. lack of oxygen, toxic gases/vapours/smoke, explosive gases)
- Works on public roads (e.g. traffic, pedestrians)
- Lifting of heavy loads (e.g. suitable equipment, stable base, qualified operator/slinger/cager)
- Consequent course of works and other Contractor's activities (e.g. existing operation and equipment)

03/12/18

- Storing, handling and use of dangerous substances (e.g. chemical substances, explosives)
- Controlled manipulation with waste materials.

Further OHS measures are mentioned in section 1.

5.1.4. Quality management system

The Contractor shall implement the Quality Management System (QMS) in compliance with requirements of relevant standards; the QMS shall cover all aspects of the implemented Works including the documents which shall be archived by the Contractor throughout the validity of the Contract. The QMS shall be designed with the aim to monitor and control all activities in all phases in compliance with the Contract requirements and shall include: design monitoring, monitoring of Work schedule and achieving of goals, ensuring timely hand-over of administration, ensuring procedures and other documents. The QMS shall be submitted not later than six weeks before the construction works commencement and shall include at least the following parts:

- Quality Assurance Plan (QAP)
- Quality Control Plan (QCP)

a) Quality Assurance Plan (QAP)

QAP shall cover at least the following fields:

- Project management, organization plan and quality assurance division. The person responsible for Contractor's QAP shall be competent to decide quality assurance issues. The persons providing quality assurance shall be independent on those who carry out the Works or supervise the Works.
- Document administration.
- Settling and archiving of variances, amendments or changes in contractual documents.
- Managing material and machine deliveries including their quality control and procedures for corrective measures.
- Control of sub-contractors and suppliers and requirements on their QMS.
- Contractor's system of current documents management for Works implementation shall include the information on subcontractors and suppliers as well as the data on assuring the Work performance only upon the valid and approved documents.
- Detail Quality Control Plan drafted by the Contractor and describing important and decisive control activities based on Tender Documents, and Contractor's own draft of the Contract implementation.

b) Quality Control Plan (QCP)

The Contractor shall submit Engineer his detail Quality Control Plan (QCP) for all steps supposed to assure the quality or measures for Works for approval. The QCP shall be submitted not less than six weeks before the commencement of construction works. If

03/12/18

Engineer does not approve the QCP in its suggested form, the Contractor shall re-elaborate it and re-submit it for a new approval. Changes implied in QCP shall not cause any changes in the agreed contractual conditions.

The Quality Control Plan shall include all inspections and tests according to the Contract for Work as well as other usual and special inspections / tests considered by the Contractor to be important for the quality of Works. For each control activity, the QCP shall state the method, intensity, time / frequency, threshold criteria and documents and the person responsible for execution of these activities. The QCP shall contain several chapters, especially:

- Assurance of the excavation works, timbering and timbering checks and groundwater pumping during the excavation works,
- Assurance of filling works, compaction and checks of trench compaction in roads,
- Assurance of works related to foundations of pumping stations and waste water treatment plants,
- Assurance of works related to construction of main building structures of pumping stations and waste water treatment plants,
- Assurance of required accuracy of construction works to maintain the defined longitudinal alignment of sewerage systems and WWTP water line,
- Assurance of required accuracy of construction works that shall be followed by technology assembling (WWTP tanks),
- Ensuring prescribed waterproof testing of sewerage systems and structures of pumping stations and waste water treatment plants.

5.1.5. Elaboration of the Environmental Impact Assessment documents (EIA)

The contractor shall elaborate Environmental Impact Assessment documents (EIA) before elaboration of main design.

The scope and content of the preliminary design for building permit is defined by the relevant regulation according to valid legislation in Montenegro.

5.1.6. Elaboration of the Preliminary design for building permit (Idejni projekat)

The Contractor shall elaborate preliminary design for building proceedings in the scope required for building permit.

Within the Contract for Work, the Contractor shall elaborate and be responsible for complete peliminary design in the scope according to section 1 (for 12,000 PE), including all its parts, opinions, permits, base documents and annexes in line with his work schedule approved by Engineer. The preliminary design shall be elaborated by a qualified designer. The Contractor shall guarantee that the designer as well as the sub-contractors have the necessary skills, experience and presumptions for elaboration of technical draft and required preliminary design.

l 03/12/18

The preliminary design and technical draft shall be elaborated in compliance with requirements of relevant standards and shall include materials and equipment complying with general and specific Employer's requirements. The documentation approved by Engineer and the Employer shall be handed over in 6 copies + 2 copies in electronic form (texts in *.doc, *.xls formats, drawings as *.dwg).

When submitting the application for Engineer's approval, the Contractor shall hand over two printed copies plus one electronic version on CD ROM including all drawings and calculations; Engineer shall return one copy of drawings and calculations to the Contractor with his comments. Changes and/or comments provided by Engineer on drawings or calculations shall be implemented and the drawings and/or calculations shall be handed over again in two copies until they acquire final approval.

Any additional documentation elaborated by the Contractor shall not change the purpose and scope of Works described in these tender base documents. Costs related to elaboration of the involved documentation shall be included in the Tender Price.

All modifications required by Engineer shall be implemented without any claim for additional costs. In the case that the Contractor does not agree with the changes required by Engineer, the Contractor shall send a written notification to Engineer within seven days from the date of receiving the modified drawing (drawings). In such case the Contractor shall again submit the specific drawing (drawings) and in relevant cases also the calculations in three copies after the Contractor considered Engineer's requirements.

No construction works shall commence before acquiring the valid building permit. The Contractor shall create sufficient reserve in his work schedule to acquire all required permits including the issues related to property rights.

The scope and content of the preliminary design for building permit is defined by the relevant regulation according to valid legislation in Montenegro.

5.1.7. Elaboration of the main design with the details for execution of works (Glavni projekat)

Within the Contract for Work, the Contractor shall elaborate and be responsible for complete main design in the scope according to section 1 (for 12,000 PE), including all its parts, opinions, permits, base documents and annexes in line with his work schedule approved by Engineer. The main design shall be elaborated by a qualified designer. The Contractor shall guarantee that the designer as well as the sub-contractors have the necessary skills, experience and presumptions for elaboration of technical draft and required main design.

The main design and technical draft shall be elaborated in compliance with requirements of relevant standards and shall include materials and equipment complying with general and specific Employer's requirements. The documentation approved by Engineer and the Employer shall be handed over in 6 copies + 2 copies in electronic form (texts in *.doc, *.xls formats, drawings as *.dwg).

The Contractor shall account for the fact that the machines and equipment offered by him meet hydraulic requirements/characteristics of the Work and any change implied by

03/12/18

installation of a specific device shall be reflected in additional design of other equipment and construction works.

Contractor's design shall respect the principle of simplicity, reliability and long trouble-free operation of the designed equipment with low operation costs.

All delivered devices shall be designed as to meet requirements for proper operation under all possible operational loads, pressures and temperatures including the change of outdoor temperature. Special attention shall be paid to cold winter and hot summer conditions.

All materials shall be new and of the best quality and shall be chosen in order to resist stress caused by operation and external conditions in optimal/usual range without deformations or deteriorations affecting efficiency and reliability of the machine equipment. The Contractor shall ensure that the electric equipment is fully satisfactory and safe for use together with the offered machine & technological equipment.

Outdoor equipment shall be able to resist climatic conditions and shall be constructed in such a way as to prevent water impounding in any point. Metal-to-metal connections shall not be allowed and all external bolts and screws shall be equipped by blank tapped holes should the through hole allow moisture penetration. Where required, anti-climatic covers shall be provided to protect the equipment, devices and cables against weather conditions and direct sunlight. Mechanics shall be constructed from materials that will not choke due to rust, corrosion or dust. Uncovered bearings of operational shafts shall be constructed as to prevent moisture and dust inward penetration along the shaft.

The Contractor shall be responsible for checking the drawings of all sub-contractors, suppliers and manufacturers of control / switch equipment and also for all interference requirements that can be necessary. As soon as the Contractor is fully convinced that the drawings are correct, he shall inform the Engineer and submit copies of the drawings for approval. Engineer shall notify of the approval in writing.

When submitting the application for Engineer's approval, the Contractor shall hand over two printed copies plus one electronic version on CD ROM of all drawings and calculations in the following manner:

- in approx. 70 % for checking and clearance,
- in full completion for approval.

Engineer shall return one copy of drawings and calculations to the Contractor with his comments. Changes and/or comments provided by Engineer on drawings or calculations shall be implemented and the drawings and/or calculations shall be handed over again in two copies until they acquire final approval.

The approved drawings shall be marked as "Approved by Engineer". Works on any part of the Work construction shall only be allowed after the Contractor's drawings and calculations are approved by Engineer. Approval of Contractor's drawings and calculations including any changes made by Engineer shall not free the Contractor from his obligation to implement the Work in compliance with the Contract.

03/12/18

Any additional documentation elaborated by the Contractor shall not change the purpose and scope of Works described in these tender base documents. Costs related to elaboration of the involved documentation shall be included in the Tender Price.

All modifications required by Engineer shall be implemented without any claim for additional costs. In the case that the Contractor does not agree with the changes required by Engineer, the Contractor shall send a written notification to Engineer within seven days from the date of receiving the modified drawing (drawings). In such case the Contractor shall again submit the specific drawing (drawings) and in relevant cases also the calculations in three copies after the Contractor considered Engineer's requirements.

No manufacturing of machine equipment items shall commence before the manufacturer acquires Engineer's written approval of the drawings. The Contractor shall create sufficient reserve in his work schedule to acquire all required permits including the issues related to property rights. Any costs caused by not meeting this requirement shall be charged to the Contractor.

The scope and content of the main design is defined by the relevant regulation according to valid legislation in Montenegro.

If during the Contract implementation and in compliance with its conditions a need arises to modify the design documents delivered by the Contractor or to apply for new or modified permissions or approvals of authorised institutions for any activity carried out on the construction site, the Contractor shall be responsible for acquiring any of these permissions, licences, approvals, certificates etc. from authorised bodies or administrators/owners including preparation of relevant documents or designs. Before such works start, subject and scope of the documents or activity shall be again consulted and approved by the Employer

5.1.8. Elaboration of contractor's documentation for manufacturing preliminaries of the construction

Within his documentation, the Contractor shall be obliged to deliver two copies of text and drawing documents of building structures and machine & technological and electrotechnical equipment which does not comprise a part of the main design.

The scope and content of the Contractor's documentation is defined by the relevant regulation according to valid legislation in Montenegro.

This Contractor's documentation shall be approved by Engineer and the Employer before the works commence.

5.1.9. Work schedule

The Contractor is obliged to elaborate detail work schedule in compliance with general requirements of the Contract within 28 days after receiving the Engineer's instruction to commence the works. The schedule shall be realistic and shall reflect seasons of the year. The work schedule shall be in compliance with technological requirements of the Employer to implement the construction in such manner that it can be handed over in complete functional

03/12/18

parts during the Work implementation. The work schedule shall respect seasons of the year and the period of increased level of ground water.

The work schedule shall include:

- All constructions and shall also reflect work schedules received from possible sub-contractors,
- Detail plan of machine utilization for individual structures,
- Number of work groups which shall be involved in piping installation,
- Number of work groups which shall be involved in construction of sewerage system connections,
- The Contractor shall, upon the information, document that the proposed number of work groups, machines and machine tools guarantee implementation of the Work within the contractual terms,
- For technological devices it shall contain individual state of construction readiness and technology deliveries of independent functional units and their main devices,

The work schedule shall be elaborated in the MS Project software and shall be completed by financial schedule elaborated in MS Excel. Both schedules are subjected to Engineer's approval.

5.1.10. Passportization (photo-documentation)

All temporal and permanent structures and their characteristics which could be negatively affected by the course of construction works shall be the subject of detail passportization. The Contractor is obliged to produce the passport of current situation of all structures in the endangered zone of each construction site before the works commence and document accesses to the lots, status of adjacent buildings and roads (warning: bituminous layers of local roads may not comply with the heavy trucks loading), planting of private lots; he shall re-document them again after returning them to their original status. The passportization represents detail identification and documentation of technical status of the structures before the works commence. Special attention shall be paid to structures in close proximity of excavations, shafts and trenchless pipe lying, identification of their status with respect to possible settlement during and after the construction implementation.

The passport shall concurrently also be produced by digital camera and recorder and shall be archived at the Contractor in course of the whole period of the Contract duration.

For the structures where potential static failures may be anticipated the passport shall be completed by construction & technical survey elaborated by an authorised structural engineer. It shall contain detail list of all damages, faults and imperfections of the construction exterior and interior as well as information on the actual building (structure).

The passportization shall be provided with minimum possible advance of the actual construction. The passportization shall always include confirmation and approval of the structure owner. If the owner refuses to approve it or cannot be reached, the confirmation

03/12/18

shall be provided in collaboration with the authority which permitted the construction, i.e. with the appropriate building office.

Detail passportization of technical status serves as a base document in potential settlement of conflicts regarding property damages.

5.1.11. Environmental protection in course of construction

In order to identify potential impacts on environment in relation to the implemented construction works, the Contractor shall elaborate and submit for Engineer's approval Action Plan for Environmental Protection / Control Plan of Activities related to environment and containing requisite corrective measures which shall be provided during the whole construction phase.

The plan shall include the following items while suggesting the ways of elimination or reduction of source pollution, apart from others:

- Hygienic facilities for construction personnel on the construction site,
- Disposal of excessive material from excavations,
- Recipient pollution by oils, impure water, construction materials and chemicals,
- Groundwater pollution due to construction activities,
- Discharge from construction site drainage systems,
- Noise,
- Air pollution,
- Order on the construction site.

Table: Control plan principles for activities affecting the environment

Project impact	Drafted reductions or supportive activities	Involved parties	Required preliminaries	Budgetary costs and time schedule for preliminaries	Budgetary costs and time schedule for Control Plan of Activities Related to Environment
Effects of the construction phase					
Job opportunities	Use of local human resources	Management The town of Danilovgrad	Notify contractors of this requirement	Without costs	Not specified / checked at concluding the Contract
Noise	Limit the working hours; mount silencers on operated devices; inform the public	The town of Danilovgrad; Engineer; Contractor	Information program on the construction phase	Costs of technical equipment	Usual budget for appointed staff of the town of Danilovgrad plus cost of local expert support for material elaboration, publishing and presentation; in turns throughout the construction period
Dust	Control the excavation	The town of	Technical	Not specified	Not specified

03/12/18

Project impact	Drafted reductions or supportive activities	Involved parties	Required preliminaries	Budgetary costs and time schedule for preliminaries	Budgetary costs and time schedule for Control Plan of Activities Related to Environment
	works; cover the vehicles carting away excavated material	Danilovgrad; Engineer; Contractor	conditions according to the Contract		
Odour	Identify and isolate the source / ensure the means to eliminate the odour in course of designing and operation; minimize the exposition; use packing material with covers for transportation	The town of Danilovgrad; Engineer; Contractor	Technical conditions according to the Contract	Costs of technical equipment	Usual budget for appointed staff of the town of Danilovgrad; occasional checking
Damage to planting	Check the construction site and ensure protection of trees and important plants where possible; reduce disturbing effects of construction activities	The town of Danilovgrad; Engineer; Contractor	Technical conditions according to the Contract	Not specified	Usual budget for appointed staff of the town of Danilovgrad; occasional checking
Pollution due to discharging untreated water	Correct collection, pumping, cart away and disposal; where required, ensure parallel services	The town of Danilovgrad; Engineer; Contractor	Technical conditions according to the Contract	Not specified	Usual budget for appointed staff of the town of Danilovgrad; occasional checking
Disposal of excavation material and topsoil removal to adjacent water body and sedimentation, disposal of building waste	Reuse on the construction site as much as possible; dispose of excessive waste of properly managed excavation activities; check surface discharges	The town of Danilovgrad; Engineer; Contractor	Technical conditions according to the Contract	Not specified	Usual budget for appointed staff of the town of Danilovgrad; occasional checking
Visible impacts	Implement the construction in as short time as possible; keep the construction site clean and in order	The town of Danilovgrad; Engineer; Contractor	Technical conditions according to the Contract	Not specified	Usual budget for appointed staff of the town of Danilovgrad; occasional checking
Protection and safety of workers and public	Elaborate control plan of traffic and information marking; ensure fencing, constable and warning tables; use personal protections and prescribed procedures	The town of Danilovgrad; Engineer; Contractor	Technical conditions according to the Contract	Not specified	Usual budget for appointed staff of the town of Danilovgrad; occasional checking

03/12/18

Project impact	Drafted reductions or supportive activities	Involved parties	Required preliminaries	Budgetary costs and time schedule for preliminaries	Budgetary costs and time schedule for Control Plan of Activities Related to Environment
Pollution of water bodies	Ban on discharging or disposal of construction material by throwing it to water	The town of Danilovgrad; Engineer; Contractor	Technical conditions according to the Contract	Not specified	Usual budget for appointed staff of the town of Danilovgrad; occasional checking

5.1.12. Information tables

The Contractor is obliged to manufacture, build and maintain 6 billboards resistant to climatic conditions, approved by Engineer and complying with the features defined in relevant legislation of Montenegro and EBRD (European Bank for Reconstruction and Development).

After the works are completed, the Contractor shall remove the billboards and install 1 commemorative table (WWTP). The permanent commemorative table shall be placed on a well visible place accessible to public and shall also meet all the features defined in the relevant legislation.

The points of billboards and commemorative table installation shall be approved by the Employer after the Contract is signed in compliance with the approved work schedule of the construction Contractor.

The Contractor is further responsible for locating required number of information tables according to relevant legislation.

Cost of the information tables shall be included in tender offer.

5.2. Documentation in course of the work implementation

5.2.1. Building log

The Contractor is obliged to keep a building log throughout the whole construction and testing operation period in accordance with relevant legislation of Montenegro. The building log shall form a part of the Contractor's documentation kept on the construction site. It shall contain records of all important events that happened during the Work implementation on the construction site in compliance with valid regulations.

Sole responsibility for keeping the building log is borne by the Contractor. The following persons are entitled to make records to the building log:

- Contractor, Employer, Engineer,
- Author supervision upon the contract concluded with the Employer, authorised geometrician of the construction,
- State inspection bodies, administrators / operators of other utility lines.

The Contractor is also responsible for keeping the assembly book which shall comprise a specific part of the building log. Both the documents shall be available to Engineer and

03/12/18

inspection bodies throughout the whole duration of the Contract for Work (i.e. also during the Trial operation). All records made by the Contractor or his representative in the building log shall be signed by the Contractor or his appointed representative.

The Contractor is not entitled to carry out and require refunding for any additional works unless they are notified to Engineer in advance, recorded in the building log and confirmed in written by Engineer.

If sub-contractors are employed, the main building log shall be kept where Engineer will write his instructions. It shall be the only relevant log in the case of any discrepancies. That is why the Contractor shall be obliged to copy all important data from sub-contractors' logs to the main building log on daily basis. Building logs shall be kept separately for each building structure.

5.2.2. Photo-documentation (passport)

The Contractor shall be obliged to elaborate repeated documentation after reconstituting each construction site in the form and scope of the passport before the construction commencement.

Concurrently, it is requisite to document the course of construction with stress laid on maintaining the Work quality, to document the covered structures, crossings with other utility lines etc. This part of the documentation shall also be included in gradual monthly reports of the Contractor.

5.2.3. As-built drawings (Projekt izvedenog objekta)

a) Geodetic survey of as-built drawings

Detail geodetic survey of the Work shall be carried out as a part of the as-built documents and the results shall be submitted to the Employer in both digital and printed versions in four copies:

The geodetic survey (GS) shall include the survey of newly constructed water supplies and related structures (e.g. pumping stations, shafts and other building structures).

It is mandatory to survey the above structures including the water supply connections, all utility lines and other services (both overhead and underground) if they comprise part of the construction, and also all reconstructions and re-layings. The geodetic survey is not mandatory for the existing structures and water supply connections.

It is prescribed to ensure positional and vertical survey of as-built documents of completed structures or, in the case of underground lines and structures, still uncovered ones by means of geodetic methods.

Requirements of as-built drawings survey are based on relevant legislation of Montenegro.

Geodetic documents shall comprise the following list of contents (for each building structure separately):

- Graphic elaboration of GS shall be provided in MicroStation in the *.dgn format,

03/12/18

- Geodetic survey shall be provided in the coordinate system used as a standard in Montenegro,
- Vertical survey shall be provided in the vertical system used as a standard in Montenegro,
- We require geodetic survey of topography and vertical alignment of the construction as-built documents including all sewerage system structures and facilities,
- Topographical and vertical survey of all parallel and crossing routes in relation to other utility lines / including those in providers administration,
- Whole construction of surveyed sewerage system routes including their crossings and routes parallel with other utility lines shall be surveyed before it is covered, which shall be confirmed by the Engineer's written opinion – shall be a part of submitted GS,
- When preparing the graphic version of GS, observe the attributes, graphic presentation of each service line, structure and facility according to GIS administrator rules,
- Before the GS is handed over, consult it with GIS administrator,
- GS for approval of individual constructions shall be submitted together with approved written approval of GIS administrator.

Content of the geodetic documentation:

Part Topography:

- Technical report,
- Geodetic data of the points of measuring network, list of points of detail topographic field – verification of the land registry office at the fixed points hand over (photo copy),
- General plot of points of detail topographic field .dgn – drawing of given and newly surveyed points,
- Measuring network.txt /*.doc/ - list of coordinates and altitudes of measuring network points; point number, coordinates x, y, z, description; given and newly surveyed points,
- Topography.dgn – contains implementation of all missing structures of the original topography with numbered structures,
- Topographic points.dgn - point number, coordinate "z",
- Topography.txt / *.doc/ - contains points of surveyed topography, point number, x, y, z,
- Control printout in the 1:500, 1:1000 scale.

Part Sewerage System:

- Sewerage.dgn – surveyed route of the sewerage and branch sewers including the structures and equipment, description of branches, material and pipe DN, decline and distances between shafts in compliance with the 18/2002 directive; dimension all important points of the sewerage from fixed topography points; use dimensions on normal; dimension all crossings with other utility lines,

03/12/18

- Sewerage points.dgn – point number, depth dimension H, coordinates z, ź, - place the dimensions as not to overlay z-coordinates in kanalizácia.dgn
- Sewerage.txt /*.doc/ - point number, coordinates x, y, z, ź, H, description
- Longitudinal section.dgn

Part Other Utility Lines:

- Other utility lines.dgn – plot of all utility lines which cross or run parallel with the surveyed pipe route, insert the depth "H" and indication of coordinates z, ź to layer 30
- Points of other utility lines.dgn - point number, coordinates z, ź
- Other utility lines.txt / *.doc/ - point number, coordinates x, y ,z ,ź ,H, description

The elaborate shall be verified by authorised geometrician.

b) Documentation of as-built documents drawings

The Contractor shall prepare and hand over to Engineer documentation of as-built drawings for all parts of executed Works on the level of the main design (i.e. updated technical report, site plan, sections, details etc.) in both printed and digital form (texts in *.doc, *.xls formats, drawings as *.dwg). Documentation of as-built drawings shall always be elaborated immediately after completing the specific part of the Work. Final version of the documentation of as-built drawings be approved by Engineer before the Acceptance Report is issued.

The Contractor is obliged to archive and update the Documentation of As-built drawings throughout the Contract duration and provide copies of the records, drawings and certificates to the Employer in regular intervals as instructed by Engineer. The records shall contain all details of all equipment and materials, construction processes, tests and test certificates.

Final copies of the Documentation of As-built documents shall be handed over to Engineer in covers and properly marked one month before the anticipated date of issuing of the Acceptance Report together with documents on the course of complex testing and variations executed as a result of these tests.

The Documentation of As-built drawings, after approved by Engineer, shall be handed over to the Employer in 4 copies of both printed and digital form with the changes from the Main design marked in colour.

c) Geometric Plans

The Contractor is responsible for elaborating geometric plans in suitable scale in such a form that is acceptable for the appropriate authority without further modifications carried out by the Employer. Number of the copies shall correspond with the number of Geodetic Survey elaborates.

The surveying and elaboration shall comply with relevant standards and instructions for work in topographic fields of points in current land register maps which shall be ensured by the Contractor. The elaborate shall be verified by an authorised geometrician.

03/12/18

5.2.4. Test plan

The Contractor shall execute all necessary tests on the construction site under operation conditions to allow the confirmation that all specifications were fulfilled to complete satisfaction of the Engineer. At least the following tests and revisions shall be carried out:

a) Program of individual testing

The Contractor shall elaborate and submit Engineer for approval Program of Individual Testing containing the scope, subject matter and time schedule of preliminaries including the requirements on operation, energy and media (provided by the Contractor).

The Contractor shall ensure functional tests of all equipment elements to provide their correct functioning within the electro-mechanic activities before the complex testing commences. Functional tests shall include verification of all protective devices, calibration and setting of the equipment in order to meet specific conditions of the construction site or the operation parameters. The aim of these tests is to simulate control of the system.

Individual tests comprise a part of technological equipment assembly; complete revision of machine equipment shall be carried out before they start.

After successful completing of tests and revisions of each equipment element as stated in this document, the Contractor shall put into operation the whole equipment as it would work under full operation conditions before the complex testing is carried out. The Contractor shall elaborate a report on successful individual testing.

b) Program of complex testing

The Contractor shall elaborate and submit Engineer for approval Program of Complex Testing containing the scope, subject matter and time schedule of preliminaries including the requirements on Employer's and provider's (operator's) collaboration in both manual and automatic operation.

Program of Complex Testing shall be in compliance with valid standards and legislation. Terms, places and testing methods shall be approved by Engineer. Unless Engineer instructs otherwise (e.g. for operation reasons), complex testing shall last 72 hours of continuous operation with the use of substitute media (pure water) before the Acceptance Report is issued. Schedule of starting the technological units and complex testing schedule shall be included in the construction schedule.

Details of the Program of Complex Testing suggested by the Contractor shall be submitted to Engineer for approval six weeks before the tests commence. These documents shall also include preliminaries for complex testing (tests of partial equipment), measurement results of achieved values, reports on executed tests and conclusions of the equipment testing signed by the Employer and Engineer. The report shall mention how the groups of machines and equipment in mutual interconnections meet the required parameters at minimum, standard and maximum design flow as well as individual achieved parameters.

The Program of Complex Testing shall also include draft of procedures preventing serious pollution of the environment and especially the water courses (recipients) as a result of the tests.

03/12/18

c) Program of starting the Trial operation

The Contractor shall also elaborate the Program of Starting the Trial Operation defining further procedures that shall be carried out after the successful complex testing and before the Trial operation starts. For the WWTP e.g. the process of reconnection from current WWTP to the new one shall be described as well as process of biological line inoculation and gradual starting of sludge disposal and gas handling Trial operation.

5.2.5. Operation and maintenance manuals (training), Project of maintenance of facility (Projekat održavanja objekta)

Before the complex testing starts, the Contractor shall ensure training for Employer's operation and maintenance personnel regarding the operation and maintenance of each technological device and the whole construction site according to the Personnel Training Program for each profession of Employer's operation and maintenance in the scope necessary for safe operation of the equipment. Separate training shall be provided to Employer's control room operators.

The goal of the training is to ensure that appointed Employer's workers gain the required knowledge about the installed technology, operation and maintenance of all equipment included in the project with the aim to secure proper continuous operation and maintenance of all Work components. Agenda and schedule of the training course shall be mutually agreed by both parties. Verification of sufficient training for Engineer shall be issued by the Employer.

Manual for the training program shall be elaborated in Montenegrin language in 12 printed copies and 1 electronic copy for each machine & technological device, electrotechnical device and device of automatic control systems for technological processes (ACSTP) for each operation, maintenance and control working sites and shall include especially:

- Description of the installed technology and its functions,
- Operation manual,
- Maintenance manual including maintenance schedule for ten years in advance after the construction works are completed,
- Quality control,
- Safety measures.

The Maintenance Manual shall define planned intervals between repeated adjustment and/or replacement of individual elements and list of all checking procedures required as an integrated part of a well prepared maintenance plan. The documents shall contain assembly, operation and maintenance guides for each device, revision reports, pressure tests etc.

A set of brochures, leaflets, instructions, diagrams, list of manufacturers etc. shall not be acceptable instead of the Operation Manual and Maintenance Manual but they may serve as additional material to these manuals.

All costs of the Contractor required to elaborate the manuals and ensure the training shall be included in the Tender Price.

03|12|18

The scope and content of the Project of maintenance of facility is defined by the relevant regulation according to valid legislation in Montenegro.

5.2.6. Operating instructions

a) Service and Handling Regulations (separate for pumping stations, sewerage systems, WWTP) shall be elaborated in the Montenegrin language in compliance with valid legislation of Montenegro.

Service Regulations shall include regulations, instructions and documents on the delivered equipment. Service Regulations shall be divided to text and drawing parts.

The text part shall include especially basic characteristics of the WWTP and pumping stations, instructions for their operation and service and handling regulations for the sewerage system, pumping stations and delivery piping. The drawing part shall include site plans, longitudinal sections, typical sections of main building structures, technological schemes, drawings of operation units, flow schemes, connection diagrams, schemes of radio communication etc. The Service Regulation shall also include first aid principles and fire regulations.

Contractor's designer shall elaborate the service regulations for Trial operation. After the Trial operation is completed and evaluated, the designer shall incorporate required changes and measures to them and the regulations shall be issued as service regulations for permanent operation

The Service Regulations shall be submitted for review including all annexes (e.g. description of ACSTP structure and algorithms) not less than 30 days before the Trial operation starts. It shall be handed over in both printed and digital versions in 6 copies.

All costs of the Contractor required to elaborate the Service Regulations shall be included in the Tender Price.

b) Lubrication plans

These documents shall include list of supplies of recommended lubricants and operation media (consumables) such as the oil sufficient for one year operation after successful approval of the whole Work. They shall be elaborated for complete machine equipment.

c) Specification of recommended spare parts

The Contractor shall be obliged to supply spare parts for all components of the Work or its parts during the whole guarantee period, i.e. within 24 months after the Acceptance Report is issued for the Work or its complete units in compliance with the Contract conditions. All costs related to purchase, transportation, storing and use of spare parts shall be included in the Tender Price. The Contractor shall not be obliged to supply spare parts for the Work or its part after the guarantee period expires, with the exception of those parts that comprise standard delivery of machines and equipment.

The Contractor shall elaborate detail specification of spare parts for long-term operation (2 to 5 years) for all machines and equipment delivered to the construction site.

03/12/18

The documents shall also include service conditions for the designed machine equipment. The Contractor shall be obliged to ensure that all his contractors delivering the equipment or its parts sign service contracts with the Employer which shall also be valid after the guarantee period expiration. All machine and electrotechnical equipment shall be designed, delivered and assembled by the Contractor with the proviso that under the service conditions faults can be repaired within 48 hours. If the above proviso is not proved for a specific type of equipment that the Contractor wants to deliver, the Employer shall have the right to change the Contractor for this equipment.

d) Specification of routine repairs

The Contractor shall elaborate and submit to the Employer Specifications of Routine Repairs which the Contractor entitles the Employer to perform or faults which the Employer may repair within the guarantee period.

5.3. Documents for construction hand-over and approval

5.3.1. Documents to construction, technological and electrotechnical works

The Contractor shall elaborate the documents for hand-over of the Works in compliance with the following items:

- Complete Documentation of As-built drawings on the level of main design,
- Changes compared to the approved design documents agreed with Engineer,
- Detail geodetic elaborate with survey of the newly implemented construction in accordance with the above mentioned items,
- Geometric plans elaborated for contracts on burdens of easement,
- Quality certificates and elaborates, attests of used materials,
- Reports on execution of individual tests (tests of pipe water-tightness, tests of tanks water-tightness, pressure tests of pipes, tests of concrete strength, individual tests of machine & technological equipment),
- Records of the tests and approving opinions regarding telecommunication, water supply, gas and other connections or records of these tests made by administrators / operators in the building log,
- Documents on compaction of trenches in roads and foot paths (test reports),
- Revision reports on electrotechnical devices,
- Documents on complex testing and report of successful execution of complex testing,
- Building logs and records of the course of construction,
- List of common faults and their repairs,
- Complete documentation required for building permits,
- List of special tests on appointed technical devices according to relevant legislation of Montenegro,

03/12/18

- Documents required according to the waste law,
- Notification of the place and term of final approval to the appropriate work inspectorate,
- Handling and service regulations including the instructions for timely and proper maintenance,
- Accompanying documents to machines and equipment issued by their manufacturers,
- Specification of recommended spare parts for long-term operation,
- Documents to prove required characteristics of technological and construction deliveries (attests, certificates of quality and completeness of machines, equipment and materials according to relevant valid standards, reports on executed tests, reports of heat-treatment of materials, welding documents, documents on pressure tanks, reports proving the quality of used materials, connection materials and electrodes, static calculations for building and steel structures, strength and dynamic calculations for technological devices etc.)
- Documents to prove required qualities of electric devices and devices for measuring, control, telemetry and control room operation (attests, certificates of quality and completeness of machines, calibration reports of measuring devices and sensors, cards of throttling devices, equipment and materials according to valid standards, reports on identification of external effects according to valid standards, reports on protection setting, reports on tests execution, documents of motors and servomotors, initial revision reports according to valid standards, declarations of conformity proving that the products incorporated in the structure comply with the required technical regulations and specifications),
- Digital recording of executed camera tests of all implemented underground pipe networks proving their good status.

5.3.2. Documents to ACSTP

Documents to hand-over of the ACSTPs shall contain complete documentation of all devices and software provided under this Contract. The documents shall be written clearly, well formatted and indexed to serve as documents that are easy to understand and use. It shall be possible to complete it with higher versions of the systems in future and with annexes. In general, it shall be of the A4 format with ring binding.

Copyright of the documents shall be the property of the Employer.

Full procedures of the operation system

The Contractor shall provide full procedures of the operation system with detail information how to use ACSTP including the following parts:

a) Launching and starting the system

b) Operator interface including:

- Navigation on the screen

03/12/18

- Possibility to go in quest – list of alarms, printing of events and trends etc.,
- Warning of alarm situations,
- Control, e.g. start up of pumps, closing of valves etc.,
- All functions connected with each access level to the system.

c) Control of the program/activity by the operator

d) Control of the files on the disc by the operator

e) Transfer of files – archiving, recovery

f) Operator's response to errors, on-line and off-line diagnostics, transfer of control between computers, synchronizing of system database

Complete software documents

Complete specification of software shall be provided and shall contain system design, diagrams, logical diagrams, definitions of software, program indexes and system structure, and system data for each system and module.

Hardware manuals

The Contractor shall provide documents for all devices delivered within the contract.

PLC program documents

The Contractor shall provide one copy for each required PLC documentation according to PLC manufacturer's delivery.

Unless otherwise stated, the Contractor's documents submitted for the construction hand-over shall be elaborated:

- in 4 printed copies and 1 electronic copy in the terms according to the schedule elaborated by the Contractor but always at least 2 months before they are planned to be needed. Engineer's approval is required for these documents.

5.3.3. Schedule of documents submitting

The below stated schedule defines the list of documents that shall be submitted to Engineer for approval in compliance with the Contract. The Contractor shall elaborate "Program of Documents Submitting" defining times of hand-over of these documents.

The schedule of documents submitting relates to the actual project implementation and the term of its completion.

Table: Schedule of documents elaboration (CC – construction commencement)

A	Documents	Description	Number of copies	Time
A1	Contractor's documents during the Work implementation	EIA, Preliminary design, Main design or other as required	6 printed 2 digital	as required

00/12/18

A2	Operation and maintenance manuals, service regulations, project of maintenance of facility		6 printed 6 digital	before trial operation
A3	Documentation of As-built drawings	on the level of main design	6 printed 6 digital	as required
A4	Geodetic survey of as-built drawings	including geometric plans	6 printed 6 digital	as required
A5	Documents for Construction Hand-over		6 printed 6 digital	for construction hand-over

B	**Programs**	**Description**	**Number of copies**	**Time**
B1	Work schedule		3 printed 1 digital	as required
B2	Individual Testing Plan		3 printed	as required
B3	Complex Testing Plan		3 printed	as required
B4	Operator's Training Plan		6 printed	as required

C	**Occupational health and safety, environmental protection**	**Description**	**Number of copies**	**Time**
C1	Quality Assurance Plan and Quality Control Plan		2 printed	as required
C2	Plan of Environmental Protection		2 printed	as required
C3	OHS log		2 printed	on monthly basis

D	**Reports**	**Description**	**Number of copies**	**Time**
D1	Monthly records of executed works		6 printed 1 digital	on monthly basis
D2	Final report		6 printed 1 digital	for construction hand-over

All of the documents or activity shall be revised and approved by the Employer and Engineer.

Revision of documents will be done in accordance with national relevant legislation.

03/12/18

03/12/18

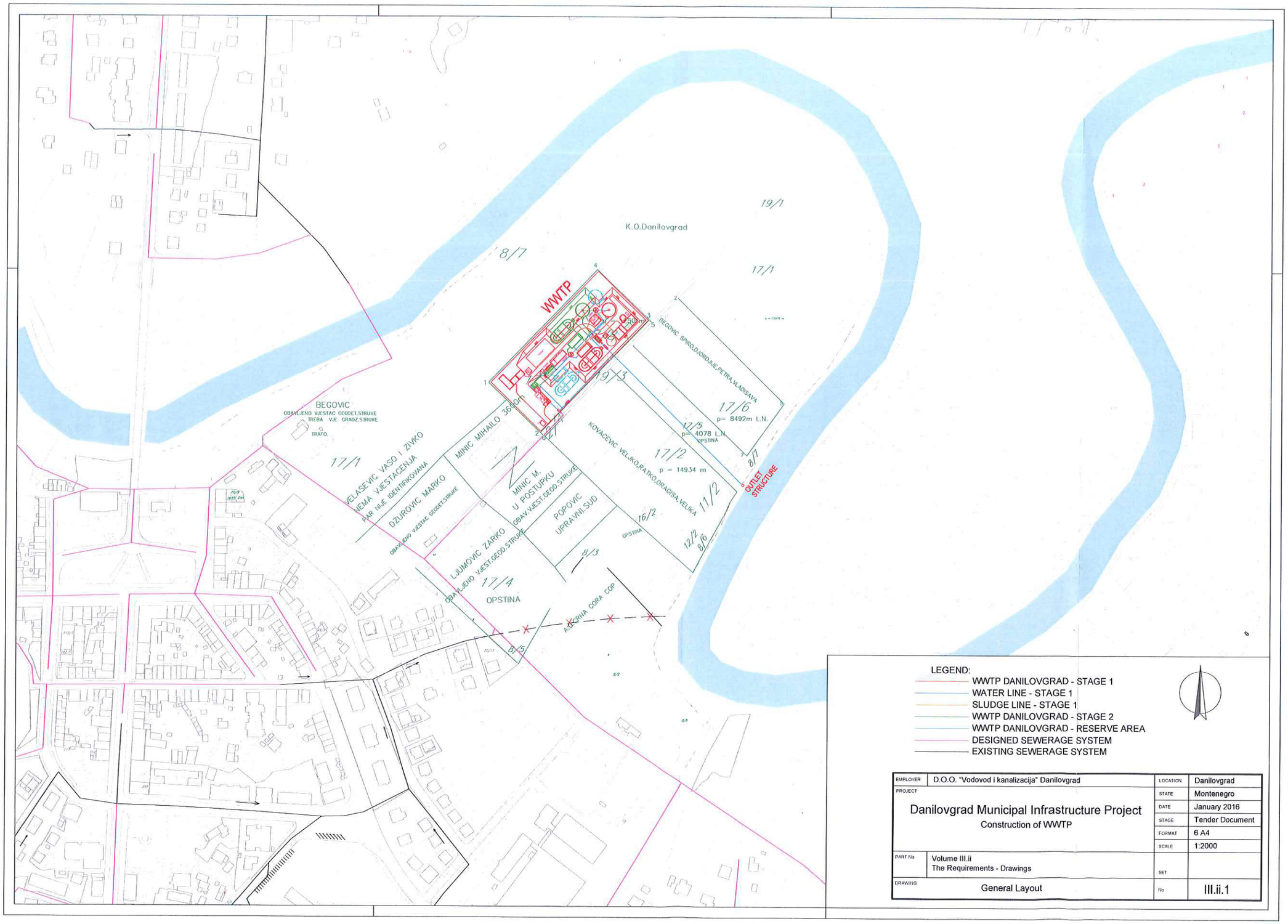

LEGEND:

- WWTP DANILOVGRAD - STAGE 1
- WATER LINE - STAGE 1
- SLUDGE LINE - STAGE 1
- WWTP DANILOVGRAD - STAGE 2
- WWTP DANILOVGRAD - RESERVE AREA
- DESIGNED SEWERAGE SYSTEM
- EXISTING SEWERAGE SYSTEM

EMPLOYER	D.O.O. "Vodovod i kanalizacija" Danilovgrad	LOCATION	Danilovgrad
PROJECT	Danilovgrad Municipal Infrastructure Project Construction of WWTP	STATE	Montenegro
		DATE	January 2016
		STAGE	Tender Document
		FORMAT	6 A4
		SCALE	1:2000
PART No	Volume III.ii The Requirements - Drawings	SET	
DRAWING	General Layout	No	III.ii.1

03/12/2018

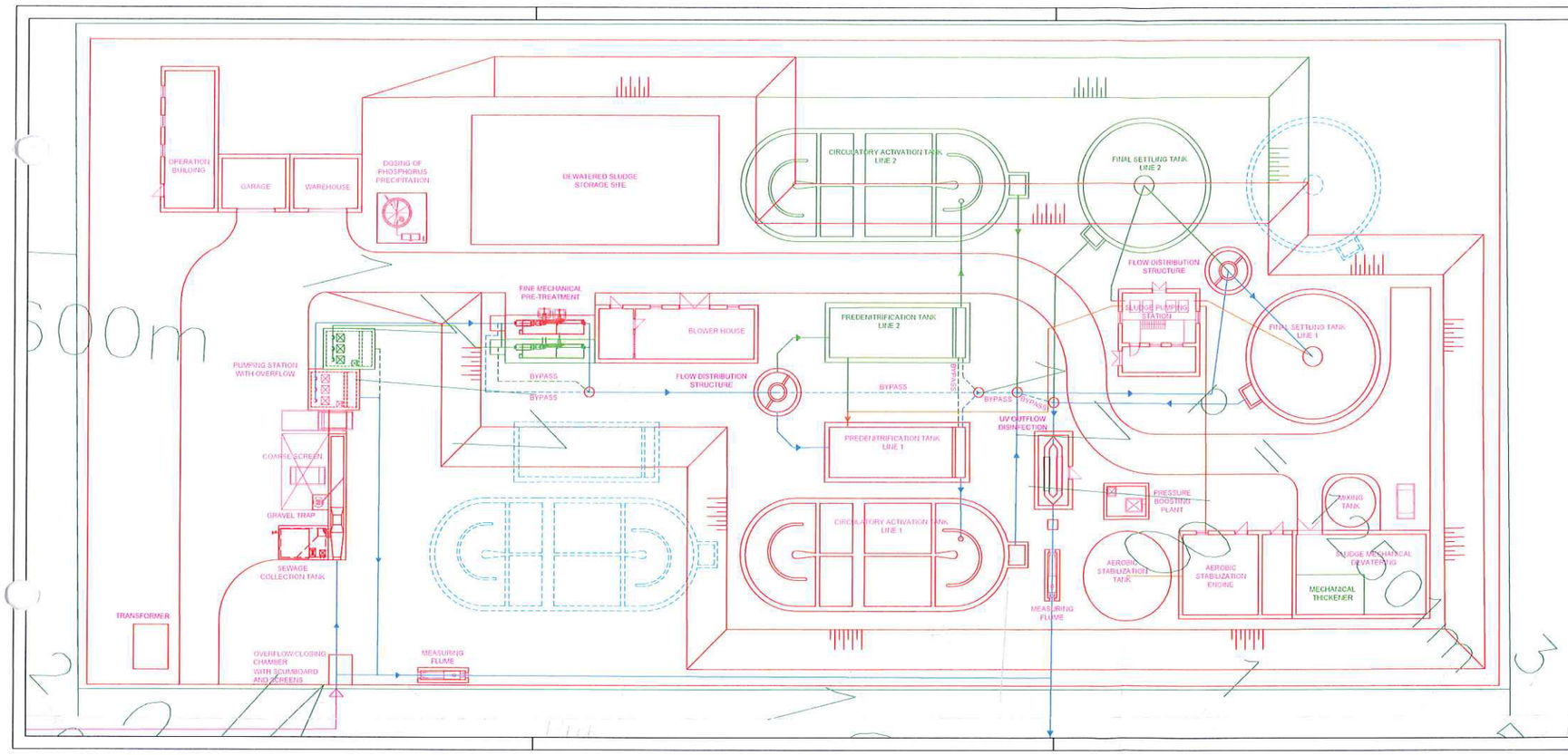

LEGEND:
- WWTP DANILOVGRAD - STAGE 1
- WATER LINE - STAGE 1
- SLUDGE LINE - STAGE 1
- WWTP DANILOVGRAD - STAGE 2
- WWTP DANILOVGRAD - RESERVE AREA
- DESIGNED SEWERAGE SYSTEM

EMPLOYER	D.O.O. "Vodovod i kanalizacija" Danilovgrad	LOCATION	Danilovgrad
PROJECT	Danilovgrad Municipal Infrastructure Project Construction of WWTP	STATE	Montenegro
		DATE	January 2016
		STAGE	Tender Document
		FORMAT	4 A4
		SCALE	1:250
PART No	Volume III.ii The Requirements - Drawings	SET	
DRAWING	Layout	No	III.ii.2

03/12/2018

WWTP DANILOVGRAD - PROCESS SCHEME

WASTEWATER INFLUENT
OVERFLOW/CLOSING CHAMBER WITH SCUMBOARD AND SCREENS
SAMPLING TO THE LABORATORY
GRAVEL TRAP
GRAVEL REMOVAL
COARSE SCREENS
WASTEWATER PUMPING STATION
Q_{max}= 26,3 l/s - STAGE 1
Q_{max}= 52,6 l/s - STAGE 2
Q_{max}= 130 l/s - STAGE 1
Q_{max}= 130 l/s - STAGE 2
RECEIPT OF COLLECTED SLUDGE (SEWAGE COLLECTION TANK)
SCREENINGS REMOVAL
OVERFLOW
FLOW
Q_{max}= 26,3 l/s
OUTFLOW OF RAIN WATER TO THE RIVER
FINE MECHANICAL SCREENS AND SAND TRAP
BYPASS
LP 1
LP 2
SCREENINGS REMOVAL
SAND REMOVAL
PREDENITRIFICATION TANKS
D1
D2
CIRCULATORY ACTIVATED SLUDGE TANKS
OA1
OA2
RETURN SLUDGE
RETURN AND EXCESS SLUDGE PUMPING STATION
FINAL SETTLING TANKS
DN1
DN2
EXCESS SLUDGE
CHEMICAL PRECIPITATION OF PHOSPHORUS
BLOWER STATION OF ACTIVATION
UV OUTFLOW DISINFECTION
FLOCCULATION STATION
SLUDGE DEWATERING
TO SEWERAGE
SLUDGE WATER
DEWATERED SLUDGE REMOVAL
EXCESS SLUDGE MECHANICAL THICKENER
AEROBIC STABILIZATION TANK OF EXCESS SLUDGE
MIXING TANK
BLOWER STATION OF SLUDGE TREATMENT
SAMPLING TO THE LABORATORY
FLOW MEASUREMENT
FINAL EFFLUENT TO THE RIVER
Q_{max}= 26,3 l/s - STAGE 1
Q_{max}= 52,6 l/s - STAGE 2

LEGEND:

- WASTEWATER, TREATED WATER - STAGE 1
- WASTEWATER, TREATED WATER - STAGE 2
- SCREENINGS - STAGE 1
- SCREENINGS - STAGE 2
- SAND, GRAVEL - STAGE 1
- SAND, GRAVEL - STAGE 2
- COLLECTED, EXCESS, THICKENED AND DEWATERED SLUDGE - STAGE 1
- COLLECTED, EXCESS, THICKENED AND DEWATERED SLUDGE - STAGE 2
- RETURN SLUDGE - STAGE 1
- RETURN SLUDGE - STAGE 2
- SLUDGE WATER - STAGE 1
- SLUDGE WATER - STAGE 2
- FLOCCULANT - STAGE 1
- FLOCCULANT - STAGE 2
- AIR - STAGE 1
- AIR - STAGE 2
- BYPASS
- OBJECTS AND EQUIPMENT - STAGE 1
- OBJECTS AND EQUIPMENT - STAGE 2

IMPORTANT NOTE:

Other necessary machinery, equipments and measurements shall be designed on the basis of WWTP configuration specified by Contractor at the next stage of project documentation (Basic design = glavni projekt).
STAGE 1 - 6 000 population equivalent
STAGE 2 - 12 000 population equivalent

EMPLOYER	D.O.O. "Vodovod i kanalizacija" Danilovgrad	LOCATION	Danilovgrad
PROJECT	Danilovgrad Municipal Infrastructure Project Construction of WWTP	STATE	Montenegro
		DATE	January 2016
		STAGE	Tender Document
		FORMAT	10 A4
		SCALE	-
PART No	Volume III ii The Requirements - Drawings	SET	
DRAWING	Process Scheme	No	III.ii.3

03/12/2018

SITE ORGANISATION AND METHOD STATEMENT

GEORGIOS KARKANIAS
PRESIDENT

03/12/18

SITE ORGANIZATION

The site organization is presented in the attached drawing.

GEORGIOS KARKANIAS
PRESIDENT

03/12/18

KARKANIAS

METHOD STATEMENT

Table of Contents

1. DESCRIPTION OF THE PROJECT 2
2. ACTIVITIES PRIOR TO COMMENCEMENT OF FIELDWORK. 2
3. KARKANIAS ENVIRONMENTAL TECHNOLOGY S.A. STAFF ACTIVITIES DURING THE EXECUTION OF THE WORK 4
4. PROCUREMENT OF MATERIALS AND EQUIPMENT 7
5. EXECUTION OF THE CIVIL WORKS. 8
6. ELECTROMECHANICAL WORKS AND INSTRUMENTATION 10
7. MAIN ACTIVITIES OF THE CONSTRUCTION 13
8. TEMPORARY FACILITIES DURING CONSTRUCTION 15
9. ISO 9001 Certificate 16

GEORGIOS KARKANIAS
PRESIDENT

03/12/18

1. DESCRIPTION OF THE PROJECT

LEAD TIME

Completion of works: 680 days
Tests (including individual tests, complex tests, application for trial operation): 22 days
Project of maintenance of facility: 60 days
Trial operation: 365 days
Defects notification period: 550 days

OBJECTIVES

GENERAL OBJECTIVE

The objective of the construction methodology of Wastewater treatment Plant of Danilovgrad is to present the Methods and considerations taken for the implementation of the Project effectively and efficiently. Similarly, with the Specific Procedures of Quality Control of Karkanias Environmental Technology s.a., it is wanted to present, clearly and precisely, the way it will be develop each of the activities of the project, Engineering development, the provision of resources and supplies of materials and equipment, for the purpose of creating a reliable working environment, quality, and safe for everyone involved, that meets the requirements of the Tender dossier.

SPECIFIC OBJECTIVES

-Define the main procedures for the implementation of civil works, mechanical and electrical works of the Wastewater treatment Plant of Danilovgrad.
-Indicate the mechanisms of control and monitoring of works.

2. ACTIVITIES PRIOR TO COMMENCEMENT OF FIELDWORK.

Prior to the commencement of the execution of works, it shall establish the Residence of the Project, which shall perform the following activities:
The staff shall have full knowledge of site where works will be developed, knowing the relevant characteristics of it and the surrounding infrastructure of the project.
It will be delivered and will present to the Engineer a chart with the names of those responsible for each area of the Residence of the Project, accompanying it with curriculum of professionals, technicians and other personnel involved, according to what is offered in this tender.

It will be established jointly with the Engineer and Karkanias Environmental Technology S.A., a directory of the project, with the information of the public servants and respective

GEORGIOS KARKANIAS
PRESIDENT

03/12/08

representatives, so that they could be located easily, as well as of those of the authorities, dependences and organisms that have relation with the project.
It will be proposed to the Engineer, in detail, the quality control of civil works, electrical and mechanical, indicating the laboratory that it should used for the project, and the location of its facilities.
By Karkanias Environmental Technology S.A. will be integrated into the site office, documents relating to the executive project, authorized by the Engineer, which will include all memories, drawings, specifications, local official standards, catalogue of concepts to express volumes and unit prices including detailed scope, implementation programs and monthly amounts of the use of labor, supplies and use of machinery and construction equipment, as well as lists of materials and equipment to be installed in the project: : Danilovgrad Municipal Infrastructure - Construction of Wastewater Plant.

It will be done by Karkanias Environmental Technology S.A., the obtaining of Building permits from the appropriate authorities for the construction of works, with the support of Employer.
The Site Organization Offices will have its place of work within the site, with sufficient capacity to accommodate the staff, equipment and project files, equipped with the necessary facilities to carry out desks and with its facilities corresponding to light, water and other services that are needed. The site staff will be responsible for integrating the record of the project as carried out under the supervision and no objection of Engineer.
The site staff will organize and attend all meetings convened by the Engineer and the Employer, to review the working relationships and communication channels among participants in the execution of the work.
The Residence of the Project staff will schedule and inform Engineer, the opening of the different fronts, the location of offices, warehouses and field facilities and bank of material product of the excavation or demolition.

Preliminary considerations for Karkanias Environmental Technology s.a. and subcontractors designated.
Be considered before executing any activity, the following aspects:

Each crew personnel must have an appropriate work program developed and approved by the Project Resident Engineer that displays the execution of the works in a logical and sequential manner and in which prevails the quality, safety and environmental conservation. This work program will be submitted for the Approval of the Engineer as defined in tender dossier after the commencement date.

It must have the supplies and equipment selected for the construction, in order to allow each of the stages of construction - as specified in the technical solutions of construction - are met fully and in an efficient and comprehensive way.
The staff directly involved in the execution of scheduled tasks, must have the requisite experience and the proper training, equipment and supplies for personal protection.
All works will be carried out under the specific standards of quality, safety and environment, that have approval or no objection from the Engineer, and they will be executed in the term of execution that has been proposed for the present project.

GEORGIOS KARKANIAS
PRESIDENT

03/12/18

The organization of Karkanias Environmental Technology s.a. will have the structure of personnel and equipment in such a way that allows it to support the work in progress, in the following fields:

- Detail engineering.
- Procurement.
- Administrative.
- Quality control and supervision of the works.
- Quality, Safety, Health and Environment.

3. KARKANIAS ENVIRONMENTAL TECHNOLOGY S.A. STAFF ACTIVITIES DURING THE EXECUTION OF THE WORK

GENERAL ACTIVITIES

During the execution of the work, Karkanias Environmental Technology s.a. will perform the following general activities:
Physically detect, and report to the Engineer, existing underground facilities on the site, which interfere with the execution of the work.

Solve the construction problems of technical order, provided they do not mean a project change, or adversely impact the budget, the implementation program, or affect safety, in which case it will be presented to the Administration a report on the specific problem, containing alternative solutions, with its evaluation of cost and time, in order to determine the pertinent.

Attend **weekly progress meetings** scheduled by the Employer, participate in analyzing and solving problems that interfere with the progress of the work, either technical or administrative; in which case, develop and deliver the respective minutes to the stakeholders.

TOPOGRAPHIC CONTROL

The necessary topographic tasks so that the works are realized according to the project, are a responsibility of the personnel of Construction designated by Karkanias Environmental Technology s.a. and will be performed through topography surveyors, covering the following aspects:
Leveling and general lines.
Construction sections.
Levels of display of structures and their correct location and sizing of elements.
Computer Equipment.

The construction personnel will have a computer equipment that will enable to develop the construction works and to present the information that the Engineer could ask, as well as monitoring of the works.

03/12/18

QUALITY CHECK

Below the activities that the Karkanias Environmental Technology s.a. staff will carry out to verify the quality of the work, and their facilities and equipment, with the responsibility to implement its program of internal quality control, essential in order to ensure compliance with the contractually agreed requirements, with advancing the construction of the work or manufacturing processes of equipment.

The construction personnel must verify compliance with quality requirements that are established in the drawings, particular project specifications, requirements of Engineer, or alternatively the National and International Standards applicable to basic materials, equipment, systems, construction or manufacturing processes, listed in the contracts of execution of work and in the procurement contract.

Request the possible subcontractors or suppliers designated for equipment, to deliver with the due anticipation the supply program for its approval, must know the basic engineering for review and verification, the source of supplies. Its requisition and production start dates, completion, testing periods of the manufacturer and reception in plant and on site, also, the period of inspection and/or final approval by the authorized technical personnel in charge, packaging, shipping and receiving in the warehouse or on site.

Implement the quality assurance program and submit it to the Engineer to seek their approval. The program shall indicate the laboratories to be used for testing, the frequency of sampling and testing of materials or products, and performance testing of equipment and systems. In addition, the names of suppliers, their location and the dates in which the inspection visits will be done to the corresponding sites.

Qualify the obtained results comparing them with the requisites of quality and the tolerances recorded in the specifications and current norms, submit the respective reports to the involved parties, meeting the deadlines agreed with the Engineer for each type of test.

When test results are not satisfactory, inform the Employer and subcontractor or provider in its case, that the works, materials and respective equipment will be rejected, explaining the reasons for that decision with due technical support, and indicating if it is necessary to proceed to its demolition, removal, replacement or correction.

Reject elements that do not meet specifications due to improper handling or storage, arrange its cleanliness or repair, and approve them to be used in the project, if the results are satisfactory.

With regard to the installation of equipment and devices that are part of the work, verify that the personnel of Karkanias Environmental Technology s.a. would adhere strictly to the indications of the instructive of installation and assembly.

Verify that the contractor performs testing and commissioning of equipment and devices, following the instructions in the operation manuals.

Observe and classify the subsoil according to their characteristics of attack, as the excavation progresses, keeping a photographic record of it and the equipment used.

Locate and submit if not objection from Engineer, banks of materials for earth works and, prior sending of these to the project.

Enforce and monitor the cleanliness of the work and protections and measures to improve environmental conditions, minimizing as much as possible the inconveniences that may occur.

03/12/18

CONTROL OF PROGRAMS

In the implementation phase of work, the following activities concerning the verification of physical progress of works, will correspond to Karkanias Environmental Technology s.a.:

Deliver in the term fixed by the Engineer, the detailed construction work programs for every front of work and the general program integrated from the previous ones, which shall respect the guidelines set by THE ENGINEER in its master program, regarding the starting and ending dates of the various stages of the project, coordination with other specialized subcontractors and receiving supplies. In addition, subprograms corresponding to the necessary resources and collaterals concerning to the evaluation of work.
Prepare the following subprograms:
-Machinery and construction equipment, indicating its characteristics and quantity for every work front.
-Supplies of materials, products and equipment that are part of the project.
-Human resources, classifying the needs of qualified personnel by specialty and category.

In any case, work programs must contain clearly identifiable items or activities, with the contractually agreed dates, and identify critical activities with the appropriate symbols; allocate the quantities of work to be undertaken in the periods into which it splits, using units of measurement of work that are consistent with the concepts listed, and units of time according to the type of program, the speed of advance and frequency overview.
Check that the time allocated to planned activities are consistent with the resources and considered yields, as well as the quantities of work to be performed.
Analyze the work programs and to give opinion on whether to accept or modify them, turning them to the General Residence of THE ENGINEER, for its knowledge.
Implement these programs in the project, once submitted by THE ENGINEER, which will be considered as contractual documents, verifying that there is no front of work that lacks program.
Verify the Contractor complies with the programs, where applicable, to ensure the contractually agreed delivery dates, comparing the real production against the programmed one, with the predetermined frequency of review or the one that deserves the problems of advance of the work.
To this effect will be a record of the quantities of work executed in the period, which could be considered to be finished, which are measured in the same units as those contained in the program, as well as work in process, weighting its degree of progress. Similarly, it will be treated the control of advance of the providers.

GEORGIOS KARKANIAS
DEVELOPMENT

03/12/18

4. PROCUREMENT OF MATERIALS AND EQUIPMENT

The definition of mechanical and electrical equipment, instrumentation and control, and procurement of materials, will be made according to the product of the Engineering Review.
All supplies will be delivered to the warehouses of the project, on the dates specified in the schedule of supplies to be formulated at the end of the Detailed Engineering.
For reception will proceed in accordance with established procedures and technical specifications determined in Detailed Engineering, establishing a process of control that will allow to know in any moment the received, classified, dispatched and lacking quantities to the date of such requirement.
Be taken into account that prior to all this, it shall be enabled and properly conditioned the storage area of materials and equipment, according to the instructions of the manufacturers and suppliers.
It shall be made appropriate lists of the materials to be received, making a detailed inventory of each item, checking the reception status.
In case of defective materials, shall be made the appropriate listings in order to proceed to the repair or replacement of them, as appropriate, reporting at all times to THE ENGINEER.
At the end of the reception of the supplies will be signed internally and as a conformity manner, Minutes of Reception of materials and supplies with the pertinent notes on the defective materials, if any.
In the reception processes will be properly recorded the following information:

- Type of material (description of N° of equipment or component, according to catalog).
- Amount received.
- State of the packing.
- State of equipment received.
- Existing damage, if any.
- Missing elements.
- Surface finish (coating condition), in the case of supports and frames.
- Date of receipt and exit in store.
- Person who delivers.
- Person who receives.

MOBILIZATION, EQUIPMENT TRANSPORTATION AND CONSTRUCTION MATERIALS

In general, mobilization, equipment transportation and construction materials shall be in accordance with the schedule use of equipment and work activities to be undertaken, which will be presented in due course to THE ENGINEER.
For this purpose, suitable means of transport shall be used to prevent damage to materials, equipment and other supplies.
In general, this activity will be properly coordinated so that none phase of construction is affected by the eventual lack of equipment and materials.

GEORGIOS KARKANIAS
PRESIDENT

03/12/18

5. EXECUTION OF THE CIVIL WORKS.

STRIPPING OF TOP SOIL.

Before starting the cleaning tasks are carried out in the sectors of the work to be executed by removing shrubs and other elements of interference with the work, to free up the sector fully to the purpose of enabling the proper conduct stakeout.
Before starting work there will be a general topographic stakeout of the work area and cleaning of the vegetable layer by mechanical means in the sector corresponding to the work as project blueprints.

EXCAVATIONS

For the excavation of large volumes, consisting of the cutting and removal of all material to be eliminated to reach the levels indicated by the Project, massive methods will be used being specially careful in that these excavations do not damage the integrity of the existing structural elements. The equipment to be used shall be in perfect conditions to operate and will be the suitable ones for the assigned work, guaranteeing in this way an optimal yield.
The whole material product of the cut and extraction will be transported inside the project area to pre-established zones indicated in the project in order to be used in construction and the rest of surplus materials will be transported to the location designated by Employer.
The control of these excavations will be done exclusively by means of topographic equipment.

COMPACTED FILLING

For the filling needed to reach the indicated levels of platforms, massive methods will be used.
These shall be confirmed by materials removed from excavations, in case they were suitable for these fillings. The equipment to use will be in good working condition and will be ideal for the work assigned, ensuring optimum performance.
The fillings shall be made in accordance with the technical specifications indicated in the technical expedient and the control of the levels will be realized by means of topographic equipment.

CONCRETE WORKS

The tracing of the work strictly according to approved plans and the indications given by the resident work, previous authorization from THE ENGINEER.
In making the general stakeout of the work, shall be fixed reference points for lines and levels, in inalterable form.
Preparation of terrain: By cleaning is removed from the terrain all existing material, waste, plants, trunks or roots that may hamper the construction work.

GEORGIOS KARKANIAS
PRESIDENT

03/12/18

Reinforced concrete

Formwork: will be dimensioned in order to withstand the launch pressure and vibration of fresh concrete, as well as the weight of the personnel involved in those operations.

Shall be watertight in order to prevent leakage of grout and mortar. Each emptying will take care to ensure adequate adhesion to the hardened concrete of previous emptying.
As for the forms of walls and other repetitive elements, elements shall be manufactured especially designed in steel and/or wood, in order to simplify the work of formwork and stripping, minimizing downtime.
The reuse of the formworks will always be conditioned to clean them once the stripping of the previous filling is done.
Immediately after proceeding to the careful stripping of the prompt structures, the union points will be repaired, as well as other defects that could exist.
Formwork panels will be mobilized, according to its weight manually or with lifting equipment and its position shall be controlled permanently, seeking to correct any lead output or deformation of the structure. For the propping of the structure when necessary shall be used props of section adapted to the charges to be supported.
In the propping of roof flagstone shall be used well known brands equipment from the formwork market, the type of formwork will be considered depending on the height and thickness of the flagstone.

Steel structure: equipment used for cutting and bending of the trusses shall be placed in an area specially set aside for them. These services shall be executed with proper equipment and specialized personnel. The raw steel will be stored separately by diameter and out of the direct contact with the ground, using for it sleepers of concrete or wooden. The steel bars shall be clean, avoiding any contact with substances that may affect the adhesion of concrete. The cutting and bending of trusses shall obey a planning, so as to minimize losses, by ordering the production flow according to the implementation schedule, thus ensuring the normal course of work.
To ensure proper positioning of the trusses shall be used spacers of mortar or plastic, built at a dosage of the same, compatible with the concrete strength specified for the piece.
Special pieces shall be manufactured also for fixation of the trusses, making sure that metallic points do not outcrop on the surface of concrete.

Concrete: The concrete premixed with cement as indicated in the detailed engineering.
In order to ensure the strength and quality of concrete specified in the project, shall keep a tight control of dispatch as well as testing of fresh concrete and hardened concrete.

The compaction of the concrete will be achieved by applying vibration criteria. It is envisaged the use of immersion vibrators, of diameters adapted to the type of concrete to be poured and to the section of the element to be realized.
The curing of concrete shall be realized by means of the application of additives.
In the construction, joints of the elements that will be in contact with the water shall be used joints that may be PVC or suitable material in each case.

GEORGIOS KARKANIAS
PRESIDENT

03/12/18

Carpeting work

Masonry work involves the construction of walls, partitions, block and parapets on clay brick masonry, concrete as indicated in the detailed engineering plans.
Labor to be used in masonry construction shall be qualified and full compliance with the basic requirements of project:
a) The walls must be constructed to lead and in line.
b) All horizontal and vertical joints, shall be completely filled with mortar.
c) The thickness of the mortar joints shall be at least 10 mm and on average 15 mm.
d) The partitions or blocks shall settle with the clean surfaces and without water.
h) The mortar shall be prepared only in the right amount for the use of one hour, not allowed the use of remixed mortar.
At all times, it shall be checked the verticality of the walls.
On the walls meeting shall be required the simultaneous raising of them for which shall provide the scaffolding for the assembly of adjacent walls.
All brick walls shall be tied to columns with any of the following procedures or a combination of them, according to blueprints.

GEORGIOS KARKANIAS
PRESIDENT

6. ELECTROMECHANICAL WORKS AND INSTRUMENTATION

03/12/18

Shall be checked that the material received matches the order placed to the manufacturer,
verifying it through the list of material accompanying it and monitoring the proper status of each element.
There will be the manufacturer's instructions regarding the treatment of the material in stages of unpacking, handling, storage and protection during mounting.

ASSEMBLY

Before to the beginning of the mounting, shall be verified the suitability and good condition of the place defined in the installation blueprints the following checkpoints will have priority:
Protect equipment and mainly the electronic against solar beams and transitory sources of heat.
Avoid mounting when the intended location is subject to sudden changes in temperature.
Avoid mounting in areas that can be crossed by pipelines that can carry any type of liquid.
Avoid mounting of equipment in areas subject to strong vibrations, without taking the necessary measures.
Respect the instructions of the respective manufacturers in terms of position of mounting of the equipment, coating in areas of high or low temperature.

MECHANICAL INSTALLATION

Screws, bolts, nuts and washers shall be as indicated by the manufacturer on the mounting instructions.
In equipment that is installed in piping (flow meters, pressure transmitters, etc.) must respect the following slogans:

ALIGNMENT OF THE EQUIPMENT WITH PIPING

Assembly joints

Joints of the same size as the pipe to avoid disturbance in the fluid.
Putting to ground:
As general norm, the screws of the bridles or elements of fixation, shall not be used for the connection of the putting to ground.
In equipment that is installed in piping shall be taken into account the following:
Use a copper hose with both ends finished in terminal and join both flanges by means of threaded screws in the flanges themselves. By a bare copper wire of section superior to 4 m/m2. Join one of the flanges to the general land network of the installation.
For equipment that is installed on metal fittings or directly on wall, shall be taken into account the manufacturer's instructions as to the ground connection.

GEORGIOS KARKANIAS
PRESIDENT

Electrical installation

All instrumentation equipment are connected to electrical conductors for both their supply and sending signals to a control board, the following indications shall be observed:
Each connection must be isolated from all other.
Do not connect any connection to the screen cables or drain, except as noted on plans.
Cable entries must be properly sealed.
The cable entries used must be suitable for the size of cable used ensuring that the closure has to be airtight.
The unused cable entries must be closed and sealed.
For connection shall always be observed the manufacturer's instructions.
Cover any cable that is naked.
Coaxial cables shall be twisted slightly.

Sealing

To achieve environmental protection in connection boxes (sealing) of equipment shall be made an encapsulation of them respecting the following points:
Apply appropriate precautionary measures in handling hazardous materials or of special uses.
Read the manufacturer's instructions carefully before preparing the material or special handling equipment.
The box terminals or connections must be encapsulated immediately at the end of connection to prevent moisture penetration.
Check all connections prior to encapsulation.
Do not refill excessively the connections box nor to leave that the material of encapsulated does contact neither with the theoretical joint or with the groove.

GEORGIOS KARKANIAS
PRESIDENT

03/12/18

7. MAIN ACTIVITIES OF THE CONSTRUCTION

The main activities considered in the work plan are, Construction of:

Inlet and overflow manhole
Septage unit
Pumping station
Mechanical Wastewater Pre-treatment Unit
Flow Distribution Chambers I & II
Predenitrification Tank
Circulating Activated Sludge Tank
Final Settling Tank
Return Activated Sludge and Excess Sludge Pumping
Chemical Phosphorus Precipitation
Filtration Unit
UV Disinfection Unit – Effluent
Sludge Aerobic Stabilisation and Thickening Tank
Sludge Holding Tank
Sludge Mechanical Dewatering Unit
Service Water Unit
Dewatered Sludge Storage Site
Blower House
Transformer House
Operation Building / Warehouse / Garage

Pipe works
Landscaping works
Fencing works

Mechanical Installations
Electrical Installations

PRELIMINARY CONSTRUCTION SCHEDULE

Construction schedule in form of Gantt chart is given in separate attachment as requested by tender dossier.

RECEDENCE AND SUCCESSION AMONG ACTIVITIES

The different tasks of a work are not performed normally in succession not simultaneously. Make all the jobs in succession would, in general, illogical, because it would lead to greatly prolong the time. Trying to simultaneously in all cases is also absurd, because some of them can only be made when previous ones have already been completed, in whole or in part.
The jobs are linked with the preceding and the following in the most convenient order, so as to properly solve the technical demands of the work, achieving an optimum combination of cost and time. This is a challenging job that requires studying various alternatives to be able to choose the one which gives better response to the objectives.

ΓΕΩΡΓΙΟΣ ΚΑΡΚΑΝΙΑΣ
ΠΡΕΣΙΔΕΝΤ

03/12/18

The relationship between different jobs is obvious, but many others can be done in one or another time, as the technical solution is adopted or depending on the availability of resources or the best distribution.
With these basis it will be done the predecessor and successor jobs table, determining what and how to precede each of the defined in time programme. Linkages necessaries for the preparation of the work program are defined.
In the developing of the work program will use four different types of relationships:
The relationship end to start (FC) is the default connection when jobs are related. Once the first job finishes, the next to begin.
A relationship is an end to end (FF) when the two jobs end at the same time.
In a relationship beginning to start (SS) the two jobs start at the same time.
The relationship beginning to end (SF) is less common than the others, but can occur when the completion of a job depends on the beginning of a subsequent job.
Attached is the list of precedence and succession, each of the activities selected to serve on the programming of work.

CRITICAL ACTIVITIES

Throughout the execution of the works subject of this planning will be manifested a series of activities whose duration will determine the other units. They are the critical activities.
On that basis they will develop the remaining works directly conditioned by them; these non-critical works will have certain time margins for implementation, being represented as gaps.
Since the work does not present a unique pattern of action, because the fronts of action are not unique, there is some uncertainty in regard unexpectedly, it is difficult to establish in advance what activities have or have no gaps.
It is therefore planned an implementation program consistent with the actions to be taken, which foresees a series of activities which by their volume, complexity or generating units, will be conditions of other jobs, regardless of which can happen unexpectedly.
Some of them will be critical for reasons of direct dependence, while others have been established because of strict security, etc.
Also appear certain activities which although not strictly critical, have been highlighted as such, in order to emphasize the importance of a temporal milestone or development of an activity that for many aspects is remarkable in any sense for the proper development of works.

GEORGIOS KARKANIAS
PRESIDENT

03/12/18

8. TEMPORARY FACILITIES DURING CONSTRUCTION

The temporary facilities to during the construction are:
-Temporary offices for Contractor and Employer/Engineer as requested
-An area for material storage
-A provisional connection of supplies (water, electricity and telecommunications)
-Toilets for workers and technical staff on site

Temporary facilities are shown in separate attachment Site organization, as requested by Tender dossier.

Location of the "Danilovgrad WWTP construction site"

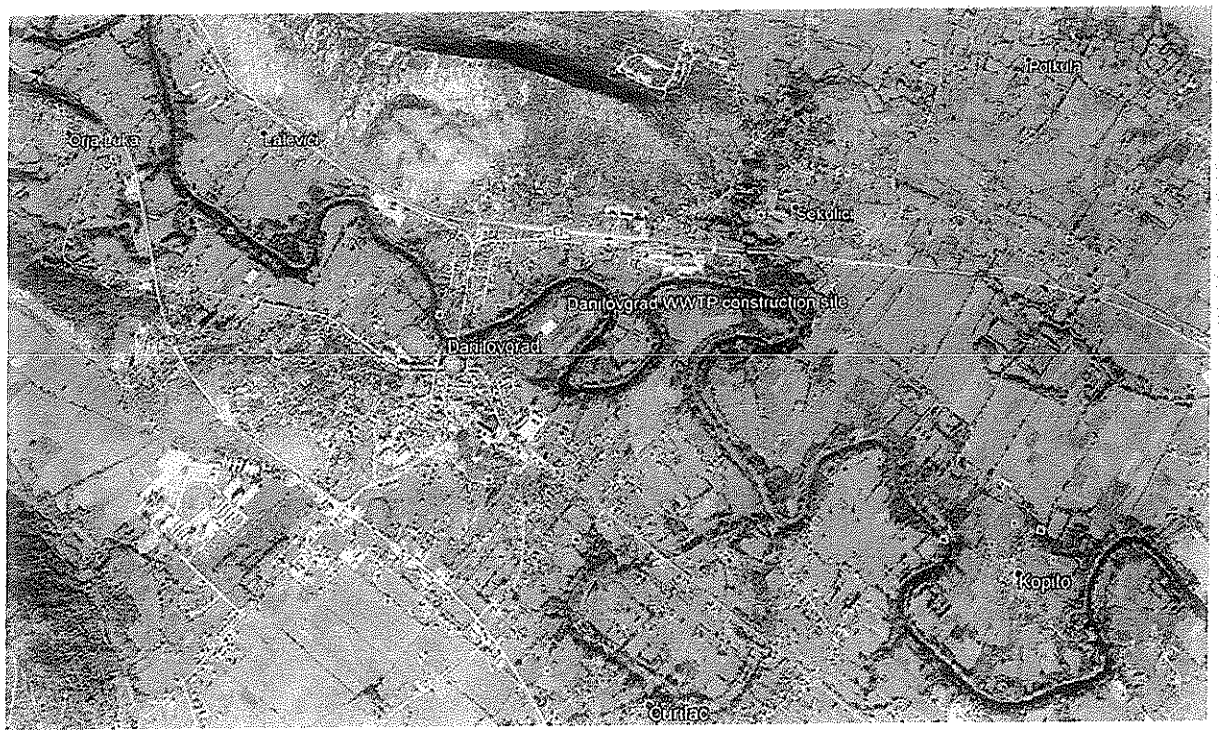

GEORGIOS KARKANIAS
PRESIDENT

03/12/18

9. ISO 9001 Certificate

SYSTEM CERTIFICATION BMTRADA ISO 9001

EXOVA BMTRADA

UKAS MANAGEMENT SYSTEMS 012

MEMBER OF MULTILATERAL IAF RECOGNITION ARRANGEMENT

CERTIFICATE OF REGISTRATION

This is to certify that

KARKANIAS ENVIRONMENTAL TECHNOLOGY S.A.
Industrial Area of Larissa
PC 41004
PO Box 3050
Larissa
Greece

has been audited and found to meet the requirements of standard
ISO 9001:2008 Quality Management System

Scope of certification

General Contractor in Design, Construction, Operation and Maintenance of Water Management Liquid and Solid Wastes Projects in which Hydraulic, Electromechanical, Structural, Industrial, Energy Projects, Roads and Ports Construction are included.

ertificate number: 10096

ue number: 2017-01

rtificate start date: 19 February 2017

rtificate expiry date: 14 September 2018

te of initial certification: 19 February 2014

Karen Prendergast
Sector Director - Certification
Exova BM TRADA

GEORGIOS KARKANIAS
PRESIDENT

03/12/18

MOBILISATION AND CONSTRUCTION SHEDULES

GEORGIOS KARKANIAS

03/12/18

CONSTRUCTION SCHEDULE

The construction schedule is attached.

GEORGIOS KARKANIAS
PRESIDENT

03/12/18

CONSTRUCTION SCHEDULE STATEMENT

The objective of the Construction Schedule of Wastewater treatment Plant of Danilovgrad is to present the time schedule and considerations taken for the implementation of the Project effectively and efficiently.

Commencement date shall be the date at which Contract Agreement will be signed and the Employer will receive the Performance Security and the Professional Indemnity Insurance.
Prior the implementation of any Contracted work, Contractor will have access to site and start the mobilization of his plant and equipment. Contractor will have access to the site fourteen (14) days after the commencement date and his mobilization will be done in the time schedule of two weeks.

Afterwards of Commencement Date, will start the implementation of "Preliminary Design" for 90 days, followed by the "Revision & Control of preliminary" for 30 days and "EIA" for 45 days.
After those activities, will start the procedure of issuing of "Building Permit" in duration of 60 days.
When the issuing of "Building Permit" will be completed, will start the implementation of "Main Design" for 60 days, followed by the "Revision & Control of main design" for 30 days.
Time for completion is defined 365 days and time for tests is defined 22 days.
After the completion of works and tests, will be executed the "Project of maintenance of facility" (60 days) and "Trial Operation" of the Project for the duration of 365 days, concluded in Completion day after 30 days.

Key materials of the Project can be defined the Mechanical and Electrical Equipment.
After the approval of the Equipment, it will be purchased and transport at the Construction Site in separate time periods, as it is presenting in the Construction Schedule Table. Main priority is the continuous execution of Mechanical and Electrical works including the transportation of goods and installation of the equipment in each part of the Project.

Concrete and reinforcement, materials than can be characterized as key materials, are existing and will be delivered at the Construction Site from close distance and their procurement procedure will be immediate during the implementation of site works.

GEORGIOS KARKANIAS
PRESIDENT

03/12/18

MOBILISATION SCHEDULE

Table of Contents

1. Introduction..... 2
2. Mobilization Activities..... 2
3. Mobilization of Equipment..... 3

GEORGIOS KARKANIAS
PRESIDENT

03/12/18

1. Introduction

Upon award of the Contract and authorization to proceed, mobilization activities will commence according to this Mobilization Plan.

Mobilization will consist of the following:

1. Mobilization of necessary labor, materials, equipment, tools and supervision to commence work on the project.
2. Continued processing of the required submittals which includes administrative and procedural requirements for submitting project work plans, product data, samples and any other submittals required in the Project Specifications.
3. Performance of pre-construction activities, which include the construction of protection fence and staging support trailers.
4. The Contractor personnel, taking part in the active remediation activities, will receive the required medical surveillance (initial entrance physicals) prior to any hazardous or intrusive the work being performed.

2. Mobilization Activities

Based on the nature of the project, will be constructed main site fence and entrance for protection and safety reasons.

1. Installation of a temporary chain link fence where is needed, around the perimeter of construction facilities, for protection and safety reasons.
2. Construction Site entrance will be constructed in site fence protected facility of the project. The construction sequence will include:
    a. Removal of the existing stone surface and soils,
    b. Compaction of ground,
    c. Installation of geotextile fabric,
    d. Delivery, placement and compacting of crushing stone covering the geotextile fabric.
    e. Installation of temporary site entrance.

GEORGIOS KARKANIAS
PRESIDENT

03/12/18

3. Deliver, stage, block and anchor temporary office trailers. Each trailer will be furnished and supplied with the necessary office furniture, equipment and supplies. Temporary utility services will be supplied. Potable water and portable toilets will be provided to service the support facility. The support facility will be maintained in a clean and orderly fashion the Project.
4. The foundation and surface layer for the temporary office trailers, employee/visitor parking area and access roads will be constructed as an aggregate base layer with delivery, placement and compaction of gravel/ base stone. This layer of stone will be graded to insure proper drainage is maintained and does not impact the surrounding area.

3. Mobilization of Equipment

General and heavy equipment will be mobilized to the site and will be staged inside the Project's security fence.

GEORGIOS KARKANIAS
PRESIDENT

03/12/18

CONTRACTOR'S EQUIPMENT

GEORGIOS KARKANIAS
PRESIDENT

03/12/18

FIDIJA

KARKANIAS

Letter of intent

This letter of intent refers to cooperation on project:Danilovgrad Municipal Infrastructure - Construction of Wastewater Plant.

According to published tender document No. EBRD ME DAN 9000,D.O.O. "Vodovod i kanalizacija" Danilovgrad, announced tender for procurement of Construction of Wastewater Plant.

Company "**Karkanias Environmental Technology S.A.**", with headquarters on address Industrial Area of Larissa Postal Code 41004 Postal Box. 3053 Larissa, Greece is specialized company in field of construction of waste water plants and waste water treatment, and participates on the above tender procurement as tenderer.
Company **IGP "FIDIJA" d.o.o** with headquarters on address StaraVaros B7, Postal Code 81000 Podgorica, Montenegrois active on civil engineering construction i.e.: earth works (wide excavations and transport of materials for all kind of buildings), (road construction, water systems, sewage systems and similar), hydro technical facilities (river regulation, mini hydropower plants etc.), and residence building construction.

With this letter the above mentioned companies confirm their interest for cooperation on project "Construction Of Wastewater Plant"; promoted by the Municipality of Danilovgrad, Montenegro.

Company "**Karkanias Environmental Technology S.A.**"intendsto use **IGP "FIDIJA"d.o.o** 'savailable equipmentfor implementation of the project as it statedin the relative tender forms and attachments.
Company **IGP "FIDIJA" d.o.o** is willing to disposethe above mentioned equipment for implementation of the projecito the **"Karkanias Environmental Technology S.A."**

Preconditions for cooperation based on this letter of intent are:
Employer's evaluation of "Karkanias Environmental Technology S.A." as the successful tenderer of the project.
Achievement of a mutual agreement between the above mentioned companies

Letter of intent is verified by authorized representatives of companies with their signatures and stamps:

IGP "FIDIJA"d.o.o.
IvanBlagojevic, Executive director

Date: 4/9/2017

Karkanias Environmental Technology SA.
GiorgosKarkanias, President

KARKANIAS ENVIRONMENTAL TECHNOLOGY S.A.
INDUSTRIAL AREA OF LARISA - GREECE
POSTAL CODE 41004, BOX 3053
TEL.: +30 2410 541386 - FAX: +30 2410 541354
Email: info@karkanias.gr
TAX NUMBER: 095244711
REGISTRATION NUMBER: 48779/31/B/01/12

Date:4 / 9/ 2017

03/12/18

iii) CONTRACTOR'S EQUIPMENT

The Tenderer shall provide adequate information to demonstrate clearly that it has the capability to meet the requirements for the key equipment listed in Volume I, Attachment 2 (Preliminary Programme). A separate Form shall be prepared for each item of equipment listed, or for alternative equipment proposed by the Tenderer. The Tenderer shall provide all the information requested below, to the extent possible. Fields with asterisk (*) shall be used for evaluation.

In case of a JVCA the form shall be submitted for each partner of the JVCA

Type of Equipment* EXCAVATOR		
Equipment Information	Name of manufacturer CATERPILAR	Model and power rating 323D , 110KW
	Capacity* 1300 l	Year of manufacture* 2007
Current Status	Current location BIJELA, TIVAT, MONTENEGRO	
	Details of current commitments	
Source	Indicate source of the equipment ☐ Owned ☒ Rented ☐ Leased ☐ Specially manufactured	

The following information shall be provided only for equipment not owned by the Tenderer.

Owner	Name of owner IGP FIDIJA d.o.o.	
	Address of owner STARA VAROS, BLOCK 7, 81000 PODGORICA	
	Telephone +382 (0) 20 621140	Contact name and title Ivan Blagojevic, Director
	Fax	Telex
Agreements	Details of rental / lease / manufacture agreements specific to the project	
	Company IGP FIDIJA d.o.o. is owner of specific equipment and it is willing to dispose it based on the "Letter of Intent" signed between KARKANIAS ENVIRONMENTAL TECHNOLOGY S.A. and IGP FIDIJA d.o.o.	

GEORGIOS KARKANIAS

03/12/18

TEHNIČKA ISPITIVANJA, KONTROLA KVALITETA I KVALIFIKACIJA, UKRUPNJAVANJE
Podgorica Bulevar Petra Četkovića 113, tel/fax: 020 656-920; 069 018 769;
e-mail: prodinspekt@t-com.me

STRUČNI NALAZ

O PREGLEDU I ISPITIVANJU SREDSTVA ZA RAD

br.: PG/450-01/04/16

SREDSTVO ZA RAD: BAGER
NARUČILAC/VLASNIK : IGP "FIDIA" D.O.O., PODGORICA
DATUM PREGLEDA I ISPITIVANJA: 28.08.2016.god.

I - A/ OPŠTI PODACI

PROIZVOĐAČ: " CATERPILAR " Francuska
BROJ ŠASIJE: " CAT0323DASED00234 "
MODEL /TIP: " 323D "
GOD.PROIZVODNJE: 2007
UPRAVLJANJE: Iz kabine
VRSTA POGONA: Motor SUS- Dizel

II - REZULTATI PREGLEDA I ISPITIVANJA

A) MAŠINSKI DIO

-STANJE METALNE KONSTRUKCIJE	zadovoljava
-MEHANIČKA ZAŠTITA ROTACIONIH I POKRETNIH DIJELOVA	zadovoljava
-ZVUČNA SIGNALIZACIJA	zadovoljava
-STANJE HIDRAULIČKE INSTALACIJE	zadovoljava
-STABILNOST SREDSTVA	zadovoljava
-POGONSKI UREĐAJ:	zadovoljava
-KOČIONI UREĐAJ:	zadovoljava
-STANJE UREĐAJA ZA UKLJ., UPRAV. I ISKLJUČI.	zadovoljava
-STANJE PNEUMATSKE INSTALACIJE	zadovoljava

III - NAPOMENA :

A)Pregled i ispitivanje su izvršena u skladu sa Zakonom o zaštiti i zdravlju na radu(SL. RCG br. 34/14), i Pravilnika o postupku i rokovima za vršenje periodičnih pregleda i ispitivanja opreme za rad, sredstava i opreme lične zaštite na radu i uslova radne sredine(SL. RCG br.: 71/05)

B) Stručni nalaz ima važnost 36 mjeseci računajući od dana kada je došlo do remonta i promjene lokacije sredstva za rad.

C) Sredstvo za rad može obavljati samo stručno lice - mašinske i elektro struke uz korišćenje kvalitetnih rezervnih djelova.

IV - OCJENA: NA NAVEDENOM SREDSTVU ZA RAD SU OBEZBIJEĐENE PROPISANE MJERE I NORMATIVI ZAŠTITE NA RADU.

Dostavljeno :
"Naručiocu "
a/a

Pregled i ispitivanje izvršili :

Srđan Branislav, dipl. el. inž.

Otašević Radoje, dipl. maš. ing.

Popović Vesna , dipl. građ. ing.

Đurašković Slobodan, SSS-ZB

Ovo stručno ispitivanje sredstva je vršeno u skladu sa zahtjevima zakona i propisa koji se odnose na ispitivanje ovakvih sredstava. Stručni nalaz je dostavljen u pregledanom stanju bez ograničenja. Ovaj stručni nalaz ne oslobađa odgovornosti korisnika u pogledu održavanja i bilo je važno samo u momentu pregleda i ispitivanja.

GEORGIOS KARKANIAS
PRESIDENT

03/12/18

iii) CONTRACTOR'S EQUIPMENT

The Tenderer shall provide adequate information to demonstrate clearly that it has the capability to meet the requirements for the key equipment listed in Volume I, Attachment 2 (Preliminary Programme). A separate Form shall be prepared for each item of equipment listed, or for alternative equipment proposed by the Tenderer. The Tenderer shall provide all the information requested below, to the extent possible. Fields with asterisk (*) shall be used for evaluation.

In case of a JVCA the form shall be submitted for each partner of the JVCA

Type of Equipment* EXCAVATOR		
Equipment Information	Name of manufacturer CATERPILAR	Model and power rating 325C , 140KW
	Capacity* 2000 l	Year of manufacture* 2006
Current Status	Current location BIJELA, TIVAT, MONTENEGRO	
	Details of current commitments	
Source	Indicate source of the equipment ☐ Owned ☒ Rented ☐ Leased ☐ Specially manufactured	

The following information shall be provided only for equipment not owned by the Tenderer.

Owner	Name of owner IGP FIDIJA d.o.o.	
	Address of owner STARA VAROS, BLOCK 7, 81000 PODGORICA	
	Telephone +382 (0) 20 621140	Contact name and title Ivan Blagojevic, Director
	Fax	Telex
Agreements	Details of rental / lease / manufacture agreements specific to the project	
	Company IGP FIDIJA d.o.o. is owner of specific equipment and it is willing to dispose it based on the "Letter of Intent" signed between KARKANIAS ENVIRONMENTAL TECHNOLOGY S.A. and IGP FIDIJA d.o.o.	

GEORGIOS KARKANIAS
DIRECTOR

03/12/18

MONTINSPEKT d.o.o. Podgorica
TEHNIČKA ISPITIVANJA, KONTROLA KVALITETA I KVANTITETA, INŽENJERING
Podgorica, Bulevar Pera Ćetkovića 113; te/.fax: 020 656-920; 069 019 755; e-mail: montinspekt@t-com.me

STRUČNI NALAZ

O PREGLEDU I ISPITIVANJU SREDSTVA ZA RAD

br.: PG/123-02/04/16

SREDSTVO ZA RAD: BAGER
NARUČILAC/VLASNIK : "FIDIJA" D.O.O., PODGORICA
DATUM PREGLEDA I ISPITIVANJA: 06.04.2016.god.

I - A/ OPŠTI PODACI -

PROIZVOĐAČ: " CATERPILAR "
BROJ ŠASIJE: " CAT0325CLCSJ01206 "
MODEL/TIP: " 325C "
GOD.PROIZVODNJE:
UPRAVLJANJE: Iz kabine
VRSTA POGONA: Motor SUS- Dizel

II - REZULTATI PREGLEDA I ISPITIVANJA

A) MAŠINSKI DIO

-STANJE METALNE KONSTRUKCIJE:.....	zadovoljava
-MEHANIČKA ZAŠTITA ROTACIONIH I POKRETNIH ELEMENATA	zadovoljava
-ZVUČNA SIGNALIZACIJA	zadovoljava
-STANJE HIDRAULIČNE INSTALACIJE	zadovoljava
-STABILNOST SREDSTVA	zadovoljava
-POGONSKI UREĐAJ:	zadovoljava
-KOČIONI UREĐAJ:.....	zadovoljava
-STANJE UREĐAJA ZA UKLJ., UPRAV. I ISKLJUČI.....	zadovoljava
-STANJE PNEUMATSKE INSTALACIJE.....	zadovoljava

III - NAPOMENA :

A)Pregled i ispitivanje su izvršena u skladu sa Zakonom o zaštiti i zdravlju na radu(SL. RCG br.:34/14), i Pravilnika o postupku i rokovima za vršenje periodičnih pregleda i ispitivanja spedstava za rad, sredstava i opreme lične zaštite na radu i uslova radne sredine(SL. RCG br.: 71/05)
B) Stručni nalaz ima važnost 36 mjeseci ukoliko nije došlo do remonta i promjene lokacije sredstva za rad.
C) Sredstvo za rad može održavati samo stručno lice mašinske i elektro struke uz korišćenje kvalitetnih rezervnih djelova.

IV - OCJENA: NA NAVEDENOM SREDSTVU ZA RAD SU OBEZBIJEĐENE PROPISANE MJERE I NORMATIVI ZAŠTITE NA RADU.

Dostavljeno :
"Naručiocu " – x2
a/a

MONTINSPEKT d.o.o. Podgorica za ispitivanje kontrole, prometa i inženjeringa

Pregled i ispitivanje izvršili :
Šobić Branislav,dipl.el.ing.
Orašević Radoje, dipl.maš.ing.
Popović Vesna , dipl.grad.ing.
Drašković Slobodan, Scc.znr.

Ova kontrola/ispitivanje izvršeno je prema našem najboljem znanju i savjesti i odnosi se isključivo na stanje u vrijeme izvršenja naše kontrole. Stručni nalaz je dozvoljeno reprodukovati samo kao cjelinu uz dozvolu izdavača i isti je valjan ukoliko je originalno potpisan i pečatom ovjeren.

GEORGIOS KARKANIAS
PRESIDENT

03/12/18

iii) CONTRACTOR'S EQUIPMENT

The Tenderer shall provide adequate information to demonstrate clearly that it has the capability to meet the requirements for the key equipment listed in Volume I, Attachment 2 (Preliminary Programme). A separate Form shall be prepared for each item of equipment listed, or for alternative equipment proposed by the Tenderer. The Tenderer shall provide all the information requested below, to the extent possible. Fields with asterisk (*) shall be used for evaluation.

In case of a JVCA the form shall be submitted for each partner of the JVCA

Type of Equipment* EXCAVATOR		
Equipment Information	Name of manufacturer PALAZZANI INDUSTRIE	Model and power rating PB903S , 77KW
	Capacity* 1100 l	Year of manufacture* 2009
Current Status	Current location BIJELA, TIVAT, MONTENEGRO	
	Details of current commitments	
Source	Indicate source of the equipment ☐ Owned ☒ Rented ☐ Leased ☐ Specially manufactured	

The following information shall be provided only for equipment not owned by the Tenderer.

Owner	Name of owner IGP FIDIJA d.o.o.	
	Address of owner STARA VAROS, BLOCK 7, 81000 PODGORICA	
	Telephone +382 (0) 20 621140	Contact name and title Ivan Blagojevic, Director
	Fax	Telex
Agreements	Details of rental / lease / manufacture agreements specific to the project	
	Company IGP FIDIJA d.o.o. is owner of specific equipment and it is willing to dispose it based on the "Letter of Intent" signed between KARKANIAS ENVIRONMENTAL TECHNOLOGY S.A. and IGP FIDIJA d.o.o.	

GEORGIOS KARKANIAS
PRESIDENT

03/12/18

MONTINSPEKT d.o.o. Podgorica
TEHNIČKA ISPITIVANJA, KONTROLA KVALITETA I KVANTITETA, INŽENJERING
Podgorica, Bulevar Pera Četkovića 113; tel./fax: 020 656-020; 069 019 755; e-mail: montinspekt@t-com.me

Broj: 386-01/04/17
Podgorica, 18.08.2017. god.

STRUČNI NALAZ
O PREGLEDU I ISPITIVANJU SREDSTVA ZA RAD

SREDSTVO ZA RAD: KOMBINOVANA GRAĐEVINSKA MAŠINA
NARUČILAC/VLASNIK : " IGP FIDIJA " D.O.O. Podgorica
MJESTO I DATUM PREGLEDA I ISPITIVANJA: Podgorica , 18.08.2017.god.

I - A/ OPŠTI PODACI -
Proizvođač: " Palazzani industrie "- Italia
Tip: " PB903S "
Fabr.br.: PB903S14082
Interni broj: 010
God.proizvodnje:2009
Pogon: SUS-Dizel
Upravljanje: iz kabine

II - REZULTATI PREGLEDA I ISPITIVANJA:
A) MAŠINSKI DIO
- Stanje pogonskog i prenosnog mehanizma..... ZADOVOLJAVA
- Stanje uređaja za uključenje, upravljanje i isključenje ..... ZADOVOLJAVA
- Zaštita opasnih mjesta (transmisije i rotacionih djelova) ..... ZADOVOLJAVA
- Natpisne pločice ..... ZADOVOLJAVA
- Oznake upozorenja, obavještenja i zabrane..... ZADOVOLJAVA
- Zvučna i svjetlosna signalizacija ..... ZADOVOLJAVA
- Stanje sigurnosnih uređaja za ograničenje (krajnji isključivači)..... ZADOVOLJAVA
- Stanje pneumatske instalacije..... ZADOVOLJAVA
- Stanje hidraulične instalacije..... ZADOVOLJAVA
- Stabilnost sredstva ..... ZADOVOLJAVA
- Kočioni mehanizam:..... ZADOVOLJAVA
- Antikorozivna zaštita..... ZADOVOLJAVA
- Tehnička dokumentacija..... ZADOVOLJAVA

III - PRIMJEDBE :

IV- OCJENA: Na osnovu rezultata izvršenih pregleda, mjerenja i ispitivanja konstatuje se da SU OBEZBIJEĐENE propisane mjere zaštite na radu na predmetnom sredstvu za rad.

V - NAPOMENA :
- Pregled i ispitivanje su izvršena u skladu sa Zakonom o zaštiti i zdravlju na radu („Sl. CG" br.:34/14), Pravilnika o postupku i rokovima za vršenje periodičnih pregleda i ispitivanja sredstava za rad, sredstava i opreme lične zaštite na radu i uslova radne sredine(„Sl. RCG" br.: 71/05);
- Stručni nalaz ima važnost 36 mjeseci ukoliko nije došlo do remonta sredstva za rad.
- Sredstvo za rad može održavati samo stručno lice mašinske struke uz korišćenje kvalitetnih rezervnih djelova

Dostavljeno :

"Naručiocu " – x2
a/a

Pregled i ispitivanje izvršili:
Šebek Branislav, dipl, el.inž
Drašković Slobodan, dipl.el.inž
Brčić Marjan, dipl.maš.inž.
Popović Vesna, dipl.inž.grad.

Ova kontrola/ispitivanje izvršena je prema našem najboljem znanju i savjesti i odnosi se isključivo na stanje u vrijeme izvršenja naše kontrole. Stručni nalaz je dozvoljeno reprodukovati samo kao cjelinu uz dozvolu izdavaca i isti je valjan ukoliko je originalno potpisan i pečatom ovjeren.

GEORGIOS ZARKANIAS
PRESIDENT

03/12/18

iii) CONTRACTOR'S EQUIPMENT

The Tenderer shall provide adequate information to demonstrate clearly that it has the capability to meet the requirements for the key equipment listed in Volume I, Attachment 2 (Preliminary Programme). A separate Form shall be prepared for each item of equipment listed, or for alternative equipment proposed by the Tenderer. The Tenderer shall provide all the information requested below, to the extent possible. Fields with asterisk (*) shall be used for evaluation.

In case of a JVCA the form shall be submitted for each partner of the JVCA

Type of Equipment* CRANE		
Equipment Information	Name of manufacturer "FM GRU" S.R.L.	Model and power rating 1250 CTY , 24KW
	Capacity* 22m=3000kg / 50m=1200kg	Year of manufacture* 2002
Current Status	Current location PODGORICA, MONTENEGRO	
	Details of current commitments	
Source	Indicate source of the equipment ☐ Owned ☒ Rented ☐ Leased ☐ Specially manufactured	

The following information shall be provided only for equipment not owned by the Tenderer.

Owner	Name of owner IGP FIDIJA d.o.o.	
	Address of owner STARA VAROS, BLOCK 7, 81000 PODGORICA	
	Telephone +382 (0) 20 621140	Contact name and title Ivan Blagojevic, Director
	Fax	Telex
Agreements	Details of rental / lease / manufacture agreements specific to the project	
	Company IGP FIDIJA d.o.o. is owner of specific equipment and it is willing to dispose it based on the "Letter of Intent" signed between KARKANIAS ENVIRONMENTAL TECHNOLOGY S.A. and IGP FIDIJA d.o.o.	

GEORGIOS KARKANIAS
DIRECTOR

03/12/18

MONTINSPEKT d.o.o. Podgorica
TEHNIČKA ISPITIVANJA, KONTROLA KVALITETA I KVANTITETA, INŽENJERING
Podgorica, Bulevar Pera Ćetkovića 113; te/.fax: 020 656-920; 069 019 755; e-mail: montinspekt@t-com.me

S T R U Č N I N A L A Z

O PRIMJENI PROPISANIH MJERA I NORMATIVA ZAŠTITE NA RADU NA DIZALICI

BROJ: 517-01/04/16

Podgorica, 29.09.2016. god.

I - OPŠTI I TEHNIČKI PODACI:

VRSTA DIZALICE: GRAĐEVINSKA TORANJSKA DIZALICA- KRAN

LOKACIJA: Gradilište „STAMBENO POSLOVNI OBJEKAT " (UP br.77, DUP „Nova Varoš 2" Izmjene i dopune, Podgorica

KORISNIK: „IGP FIDIJA" doo- Podgorica

PROIZVOĐAČ: „FM GRU" S.R.L.

FABRIČKI BROJ : 12458

TIP: 1250.CTY

POGONSKA KLASA: II.

GODINA PROIZVODNJE: 2002

NAZIVNA NOSIVOST: 1200kg na 50m/3000kg na 22m.

UPRAVLJANJE: iz kabine.

VRSTA POGONA: Električni

IZVRŠNI DIREKTOR:

"MONTINSPEKT" Šebek Branislav,dipl.el.ing.

Ova kontrola/ispitivanje izvršeno je prema našem najboljem znanju i savjesti i odnosi se isključivo na stanje u vrijeme izvršenja naše kontrole. Stručni nalaz je dozvoljeno reprodukovati samo kao cjelina uz dozvolu izdavača i isti je valjan ukoliko je originalno potpisan i pečatom ovjeren.

GEORGIOS KARKANIAS
PRESIDENT

03/12/18

Stručni nalaz br. 517-01/04/16

II - REZULTATI PREGLEDA I ISPITIVANJA:

1. Kočenje: dizalice - Zadovoljava
mačke - Zadovoljava
dizanja - Zadovoljava

2. Krajnji sklјučivači: dizalice - Zadovoljava
mačke - Zadovoljava
dizanja - Zadovoljava

3. Statičko opterećenje: Zadovoljava
4. Dinamičko opterećenje: Zadovoljava
5. Stabilnost dizalice: Zadovoljava
6. Metalna konstrukcija: Zadovoljava
7. Antikoroziona zaštita: Zadovoljava
8. Natpisi i oznake: Zadovoljavaju
9. Električna instalacija: zaštita od direktnog dodira - zadovoljava
zaštita od indirektnog dodira - zadovoljava
otpor izolacije el. instalacije - zadovoljava
izjednačenje potencijala - zadovoljava
napojni vod i ostali kablovi - zadovoljava
glavna sklopka - zadovoljava
dizalična sklopka - zadovoljava
uređaji za upravljanje - zadovoljava

Tehnička dokumentacija: priložena
PRIMJEDBE :
DATUM PREGLEDA I ISPITIVANJA: 29.09.2016.god.

III - NAPOMENA :
A)Pregled i ispitivanje su izvršena u skladu sa Zakonom o zaštiti i zdravlju na radu(SL. RCG br.:34/14), i Pravilnika o postupku i rokovima za vršenje periodičnih pregleda i ispitivanja spedstava za rad, sredstava i opreme lične zaštite na radu i uslova radne sredine(SL. RCG br.: 71/05)
B) Stručni nalaz ima važnost 12 mjeseci ukoliko nije došlo do remonta i promjene lokacije sredstva za rad.
C) Sredstvo za rad može održavati samo stručno lice mašinske i elektro struke uz korišćenje kvalitetnih rezervnih djelova.
D) Uz stručni nalaz se nalazi i izvjestaj o ispitivanju dinamičkog modula deformacije.

IV - OCJENA: NA NAVEDENOM SREDSTVU ZA RAD SU OBEZBIJEĐENE PROPISANE MJERE I NORMATIVI ZAŠTITE NA RADU

Dostavljeno :
"Naručiocu " - x2
a/a

Pregled i ispitivanje izvršili :
Šebek Branislav,dipl.el.ing.
Otašević Radoje, dipl.maš.ing.
Popović Vesna , dipl.grad.ing.
Draškovic Slobodan, Scc.znr.

"MONTINSPEKT" D.O.O. PODGORICA

Ova kontrola/ispitivanje izvršeno je prema našem najboljem znanju i savjesti i odnosi se isključivo na stanje u vrijeme izvršenja naše kontrole. Stručni nalaz je dozvoljeno reprodukovati samo kao cjelinu uz dozvolu izdavača i isti je valjan ukoliko je originalno potpisan i pečatom ovjeren.

GEORGIOS KARKANIAS
PRESIDENT

03/12/18

Crna Gora

Ministarstvo rada i socijalnog staranja

Broj: 170-108/15-3
Podgorica, 05.01.2016. godine

Na osnovu člana 41 Zakona o zaštiti i zdravlju na radu ("Sl. list CG", br. 34/14), člana 2 i 12 Pravilnika o uslovima koje mora da ispunjava pravno ili fizičko lice za obavljanje stručnih poslova iz zaštite na radu i postupku za utvrđivanje ispunjenosti tih uslova ("Sl. list RCG", br. 67/05), rješavajući po zahtjevu D.O.O. "MONTINSPEKT" Bulevar Pera Ćetkovića 113, Podgorica, broj 170-108/15-1 od 02.12.2015. godine, Ministarstvo rada i socijalnog staranja, donosi

R J E Š E N J E

OVLAŠĆUJE SE D.O.O. "MONTINSPEKT" Bulevar Pera Ćetkovića 113, Podgorica, da može obavljati sledeće poslove iz zaštite i zdravlja na radu i to:

1. izradu akta o procjeni rizika, sa predlogom mjera za njihovo otklanjanje,
2. periodične preglede i ispitivanja sredstava za rad, električnih i drugih instalacija i sredstava i opreme lične zaštite na radu,
3. ispitivanje uslova radne sredine: fizičkih štetnosti (buka), osvijetljenost i mikroklima,
4. reviziju (ocjenu) tehničke dokumentacije sa aspekta primijenjenosti mjera zaštite, tehničkih propisa i standarda, radi utvrđivanja obezbijeđenosti zaštite zaposlenih u objektima za koje je urađena tehnička dokumentacija, za procese rada koji će se obavljati u njima,
5. osposobljavanje i provjeru osposobljenosti za bezbjedan rad zaposlenih i
6. poslovi iz člana 40 Zakona o zaštiti i zdravlju na radu:
   - savjetuje poslodavca pri planiranju, izboru i održavanju sredstava za rad i sredstava i opreme za ličnu zaštitu na radu;
   - savjetuje poslodavca kod opremanja i uređivanja radnog mjesta, uzimajući u obzir i uslove radne sredine;
   - učestvuje u izradi stručne podloge za akt o procjeni rizika;
   - organizuje predhodna i periodična ispitivanja uslova radne sredine (hemijskih, fizičkih i bioloških štetnosti, mikroklime i osvijetljenosti);
   - organizuje periodične preglede i ispitivanje sredstava za rad, električnih i drugih instalacija;
   - predlaže mjere za poboljšanje uslova rada, naročito na radnim mjestima sa posebnim uslovima rada, odnosno povećanim rizicima;
   - na svim poslovima kod poslodavca prati primjenu mjera zaštite i održavanja sredstava za rad i sredstava i opreme za ličnu zaštitu na radu u ispravnom stanju;
   - obezbjeđuje uputstva za bezbjedan rad i kontroliše njihovu primjenu;

Rimski trg br. 46, PC Vektra 81000 Podgorica
Tel: (+382) 20 482-148; Fax: (+382) 20 234-227
www.minradiss.gov.me

GEORGIOS KARKANTAS
PRESIDENT

03/12/18

iii) CONTRACTOR'S EQUIPMENT

The Tenderer shall provide adequate information to demonstrate clearly that it has the capability to meet the requirements for the key equipment listed in Volume I, Attachment 2 (Preliminary Programme). A separate Form shall be prepared for each item of equipment listed, or for alternative equipment proposed by the Tenderer. The Tenderer shall provide all the information requested below, to the extent possible. Fields with asterisk (*) shall be used for evaluation.

In case of a JVCA the form shall be submitted for each partner of the JVCA

Type of Equipment* CRANE		
Equipment Information	Name of manufacturer LIEBHERR WERK	Model and power rating 27 K , 18KW
	Capacity* 12,3m=3000kg / 30m=800kg	Year of manufacture* 1979
Current Status	Current location PODGORICA, MONTENEGRO	
	Details of current commitments	
Source	Indicate source of the equipment ☐ Owned ☒ Rented ☐ Leased ☐ Specially manufactured	

The following information shall be provided only for equipment not owned by the Tenderer.

Owner	Name of owner IGP FIDIJA d.o.o.	
	Address of owner STARA VAROS, BLOCK 7, 81000 PODGORICA	
	Telephone +382 (0) 20 621140	Contact name and title Ivan Blagojevic, Director
	Fax	Telex
Agreements	Details of rental / lease / manufacture agreements specific to the project Company IGP FIDIJA d.o.o. is owner of specific equipment and it is willing to dispose it based on the "Letter of Intent" signed between KARKANIAS ENVIRONMENTAL TECHNOLOGY S.A. and IGP FIDIJA d.o.o.	

GEORGIOS KARKANIAS
PRESIDENT

03/12/18

MONTINSPEKT d.o.o. Podgorica
TEHNIČKA ISPITIVANJA, KONTROLA KVALITETA I KVANTITETA, INŽENJERING
Podgorica, Bulevar Pera Ćetkovića 113; tel./fax: 020 656-820; 069 019 755; e-mail: montinspekt@t-com.me

S T R U Č N I N A L A Z

O PRIMJENI PROPISANIH MJERA I NORMATIVA ZAŠTITE NA RADU NA DIZALICI

BROJ: PG/605-02/03/15

Podgorica, 19.10.2015. god.

I - OPŠTI I TEHNIČKI PODACI:

VRSTA DIZALICE: GRADEVINSKA DIZALICA

LOKACIJA: Gradilište „Izgradnja objekta za prečišćavanje procjednih voda" na UP br.6/2 koju čine KP 9/1 KO Tuzi u zahvatu Urbanističkog projekta „SANITARNA DEPONIJA SA RECIKLAŽNIM CENTROM" u Podgorici

KORISNIK: „IGP FIDIJA" doo- Podgorica

PROIZVODAČ: LIEBHERR WERK

FABRIČKI BROJ : 912709/63

TIP: 27 K

POGONSKA KLASA: II.

GODINA PROIZVODNJE: 1979

NAZIVNA NOSIVOST: 800kg na 30m/3000kg na 12,3m.

UPRAVLJANJE: iz kabine i daljinski.

VRSTA POGONA: Električni

IZVRŠNI DIREKTOR:
Šebek Branislav,dipl.el.ing.

Ova kontrola/ispitivanje izvršeno je prema našem najboljem znanju i saznanju i odnosi se isključivo na stanje u vrijeme izvršenja naše kontrole. Stručni nalaz je dozvoljeno reprodukovati samo kao cjelinu uz dozvolu izdavača i isti je važan ukoliko je originalno potpisan i pečatom ovjeren

GEORGIOS KARKANTAS
PRESIDENT

03/12/8

Stručni nalaz br. PG/605-02/03/15

II - REZULTATI PREGLEDA I ISPITIVANJA:

1. Kočenje: dizalice - Zadovoljava
mačke - Zadovoljava
dizanja - Zadovoljava

2. Krajnji sklopnici: dizalice - Zadovoljava
mačke - Zadovoljava
dizanja - Zadovoljava

3. Statičko opterećenje: Zadovoljava
4. Dinamičko opterećenje: Zadovoljava
5. Stabilnost dizalice: Zadovoljava
6. Metalna konstrukcija: Zadovoljava
7. Antikoroziona zaštita: Zadovoljava
8. Natpisi i oznake: Zadovoljavaju
9. Električna instalacija: zaštita od direktnog dodira - zadovoljava
zaštita od indirektnog dodira - zadovoljava
otpor izolacije el. instalacije - zadovoljava
izjednačenje potencijala - zadovoljava
napojni vod i ostali kablovi - zadovoljava
glavna sklopka - zadovoljava
dizalična sklopka - zadovoljava
uređaji za upravljanje - zadovoljava

Tehnička dokumentacija: priložena
PRIMJEDBE :
DATUM PREGLEDA I ISPITIVANJA: 19.10.2015.god.

III - NAPOMENA :
A)Pregled i ispitivanje su izvršena u skladu sa Zakonom o zaštiti i zdravlju na radu(SL. RCG br.:54/14), i Pravilnika o postupku i rokovima za vršenje periodičnih pregleda i ispitivanja sredstava za rad, sredstava i opreme lične zaštite na radu i uslova radne sredine(SL. RCG br.: 71/05)
B) Stručni nalaz ima važnost 36 mjeseci ukoliko nije došlo do remonta i promjene lokacije sredstva za rad.
C) Sredstvo za rad može održavati samo stručno lice mašinske i elektro struke uz korišćenje kvalitetnih rezervnih djelova.
D) Uz stručni nalaz se nalazi i izvjestaj o ispitivanju dinamičkog modula deformacije.

IV - OCJENA: NA NAVEDENOM SREDSTVU ZA RAD SU OBEZBIJEDENE PROPISANE MJERE I NORMATIVI ZAŠTITE NA RADU.

Dostavljeno :
"Naručiocu" x2
a/a

Pregled i ispitivanje izvršili :
Šebek Branislav,dipl.el.ing.
Otašević Radoje, dipl.mas.ing.
Popović Vesna , dipl.građ.ing.
Drašković Slobodan, Sec.znr.

Ova kontrola/ispitivanje izvršeno je prema našem najboljem znanju i savjesti i odnosi se isključivo na stanje u vrijeme izvršenja naše kontrole. Stručni nalaz je dozvoljeno reprodukovati samo kao cjelinu uz dozvolu izdavača i isti je valjan ukoliko je originalno potpisan i pečatom ovjeren"

GEORGIOS KARKANIAS
PRESIDENT

03/12/18

Crna Gora

Ministarstvo rada i socijalnog staranja

Broj: 170-21/2012-4
Podgorica, 08.01.2013. godine

Ministarstvo rada i socijalnog staranja rješavajući po zahtjevu "MONTINSPEKT" D.O.O. ul. Pete Proleterske br. 259 Podgorica, broj 170-27/2012-1 od 08.11.2012. godine na osnovu člana 37 Zakona o zaštiti na radu ("Službeni list RCG", br. 79/04 i "Službeni list CG", br. 26/10), u vezi sa članom 12 Pravilnika o uslovima koje mora da ispunjava pravno ili fizičko lice za obavljanje stručnih poslova iz zaštite na radu i postupku za utvrđivanje ispunjenosti tih uslova ("Službeni list RCG", br. 67/05), donosi

R J E Š E NJ E

OVLAŠĆUJE SE "MONTINSPEKT" D.O.O. ul. Pete Proleterske br. 259 Podgorica, da može obavljati sljedeće poslove iz zaštite na radu:

1. pripremu akata o procjeni rizika; sa predlogom mjera za njihovo otklanjanje,
2. periodične preglede i ispitivanja opreme za rad i sredstava za rad, električnih i drugih instalacija i sredstava i opreme lične zaštite na radu,
3. ispitivanje uslova radne sredine: fizičkih štetnosti (buka), osvjetljenost i mikroklima;
4. reviziju (ocjenu) tehničke dokumentacije sa aspekta primijenjenosti preventivnih mjera zaštite na radu, tehničkih propisa i standarda, radi utvrđivanja obezbijeđenosti zaštite zaposlenih u objektima za koje je urađena tehnička dokumentacija, za procese rada koji će se obavljati u njima,
5. osposobljavanje i provjeru osposobljenosti za bezbjedan rad zaposlenih i
6. poslovi iz člana 36 Zakona o zaštiti na radu;

- savjetovanje poslodavca pri planiranju, izboru i održavanju sredstava za rad i sredstava i opreme za ličnu zaštitu na radu;
- savjetovanje poslodavca kod opremanja i uređivanja radnog mjesta, uzimajući u obzir i uslove radne sredine;
- učestvovanje u izradi stručne podloge za akt o procjeni rizika;
- organizovanje prethodnih i periodičnih ispitivanja uslova radne sredine (fizičkih, hemijskih, bioloških štetnosti, mikroklime i osvijetljenosti);
- organizovanje periodičnih pregleda i ispitivanja sredstava za rad, električnih i drugih instalacija;
- predlaganje mjera za poboljšanje uslova rada, naročito na radnim mjestima sa povećanim rizicima;
- na svim poslovima kod poslodavca praćenje primjene mjera za zaštitu na radu i održavanje sredstava za rad u ispravnom stanju i sredstava i opreme za ličnu zaštitu na radu;
- obezbjeđivanje uputstava za bezbjedan rad i kontrolisanje njihove primjene;

GEORGIOS KARKANIAS
PRESIDENT

4

08/12/18

iii) CONTRACTOR'S EQUIPMENT

The Tenderer shall provide adequate information to demonstrate clearly that it has the capability to meet the requirements for the key equipment listed in Volume I, Attachment 2 (Preliminary Programme). A separate Form shall be prepared for each item of equipment listed, or for alternative equipment proposed by the Tenderer. The Tenderer shall provide all the information requested below, to the extent possible. Fields with asterisk (*) shall be used for evaluation.

In case of a JVCA the form shall be submitted for each partner of the JVCA

Type of Equipment* CRANE		
Equipment Information	Name of manufacturer LIEBHERR-WERKE BIBERACH GES	Model and power rating LA07184/27K , 18KW
	Capacity* MAX=3000kg / 30m=750kg	Year of manufacture* 1980
Current Status	Current location PODGORICA, MONTENEGRO	
	Details of current commitments	
Source	Indicate source of the equipment ☐ Owned ☒ Rented ☐ Leased ☐ Specially manufactured	

The following information shall be provided only for equipment not owned by the Tenderer.

Owner	Name of owner IGP FIDIJA d.o.o.	
	Address of owner STARA VAROS, BLOCK 7, 81000 PODGORICA	
	Telephone +382 (0) 20 621140	Contact name and title Ivan Blagojevic, Director
	Fax	Telex
Agreements	Details of rental / lease / manufacture agreements specific to the project	
	Company IGP FIDIJA d.o.o. is owner of specific equipment and it is willing to dispose it based on the "Letter of Intent" signed between KARKANIAS ENVIRONMENTAL TECHNOLOGY S.A. and IGP FIDIJA d.o.o.	

GEORGIOS KARKANIAS
PRESIDENT

03/12/18

MONTINSPEKT d.o.o. Podgorica
TEHNIČKA ISPITIVANJA, KONTROLA KVALITETA I KVANTITETA, INŽENJERING
Podgorica, Bulevar Pera Ćetkovića 113; te/.fax: 020 656-920; 069 019 755; e-mail: montinspekt@t-com.me

S T R U Č N I N A L A Z

O PRIMJENI PROPISANIH MJERA I NORMATIVA ZAŠTITE NA RADU NA DIZALICI

BROJ: 517-02/04/16

Podgorica, 29.09.2016. god.

I - OPŠTI I TEHNIČKI PODACI:

VRSTA DIZALICE: GRAĐEVINSKA DIZALICA

LOKACIJA: Magacinsko skladište Zagorič- Podgorica

KORISNIK: „IGP FIDIJA" doo- Podgorica

PROIZVOĐAČ: " LIEBHERR-WERKE BIBERACH GES "- Njemačka

FABRIČKI BROJ: " 012708/21 "

MODEL/TIP: " LA07184/27K "

MAX.NOSIVOST: 3000 kg/ NA KRAJU RUKE: 750 kg

GODINA PROIZVODNJE: 1980

INTERNI BROJ:

UPRAVLJANJE: iz kabine i daljinski.

VRSTA POGONA: Električni

IZVRŠNI DIREKTOR:
Šćepek Branislav,dipl.el.ing.

Ova kontrola/ispitivanje izvršeno je prema našem najboljem znanju i savjesti i odnosi se isključivo na stanje u vrijeme izvršenja vaše kontrole. Stručni nalaz je dozvoljeno reprodukovati samo kao cjelinu uz dozvolu izdavača i isti je valjan ukoliko je originalno potpisan i pečatom ovjeren.

GEORGIOS KARKANIAS
PRESIDENT

03/12/18

Stručni nalaz br. 517-02/04/16

II - REZULTATI PREGLEDA I ISPITIVANJA:

1. Kočenje: dizalice - Zadovoljava
mačke - Zadovoljava
dizanja - Zadovoljava

2. Krajnji sključivači: dizalice - Zadovoljava
mačke - Zadovoljava
dizanja - Zadovoljava

3. Statičko opterećenje: Zadovoljava
4. Dinamičko opterećenje: Zadovoljava
5. Stabilnost dizalice: Zadovoljava
6. Metalna konstrukcija: Zadovoljava
7. Antikoroziona zaštita: Zadovoljava
8. Natpisi i oznake: Zadovoljavaju
9. Električna instalacija: zaštita od direktnog dodira - zadovoljava
zaštita od indirektnog dodira - zadovoljava
otpor izolacije el. instalacije - zadovoljava
izjednačenje potencijala - zadovoljava
napojni vod i ostali kablovi - zadovoljava
glavna sklopka - zadovoljava
dizalična sklopka - zadovoljava
uređaji za upravljanje - zadovoljava

Tehnička dokumentacija: priložena
PRIMJEDBE :
DATUM PREGLEDA I ISPITIVANJA: 29.09.2016.god.

III - NAPOMENA :

A)Pregled i ispitivanje su izvršena u skladu sa Zakonom o zaštiti i zdravlju na radu(SL. RCG br.:34/14), i Pravilnika o postupku i rokovima za vršenje periodičnih pregleda i ispitivanja spedstava za rad, sredstava i opreme lične zaštite na radu i uslova radne sredine(SL. RCG br.: 71/05)
B) Stručni nalaz ima važnost 36 mjeseci ukoliko nije došlo do remonta i promjene lokacije sredstva za rad.
C) Sredstvo za rad može održavati samo stručno lice mašinske i elektro struke uz korišćenje kvalitetnih rezervnih djelova.
D) Uz stručni nalaz se nalazi i izvjestaj o ispitivanju dinamičkog modula deformacije.

IV - OCJENA: NA NAVEDENOM SREDSTVU ZA RAD SU OBEZBIJEĐENE PROPISANE MJERE I NORMATIVI ZAŠTITE NA RADU.

Dostavljeno :
"Naručiocu " – x2
a/a

Pregled i ispitivanje izvršili :

Šebek Branislav,dipl.el.ing.
Otašević Radoje, dipl.maš.ing.
Popović Vesna , dipl.grad.ing.
Draškovic Slobodan, Scc.znr.

D.O.O. za usluge kontrole, premata i inž. djelatnosti "MONTINSPEKT" PODGORICA

Ova kontrola/ispitivanje izvršeno je prema našem najboljem znanju i sujesti i odnosi se isključivo na stanje u vrijeme izvršenja naše kontrole. Stručni nalaz je dozvoljeno reprodukovati samo kao cjelinu uz dozvolu izdavača i isti je valjan ukoliko je originalno potpisan i pečatom ovjeren.

GEORGIOS KARKANIAS
PRESIDENT

03/12/18

Crna Gora

Ministarstvo rada i socijalnog staranja

Broj: 170-108/15-3
Podgorica, 05.01.2016. godine

Na osnovu člana 41 Zakona o zaštiti i zdravlju na radu ("Sl. list CG", br. 34/14), člana 2 i 12 Pravilnika o uslovima koje mora da ispunjava pravno ili fizičko lice za obavljanje stručnih poslova iz zaštite na radu i postupku za utvrđivanje ispunjenosti tih uslova ("Sl. list RCG", br. 67/05), rješavajući po zahtjevu D.O.O. "MONTINSPEKT" Bulevar Pera Četkovića 113, Podgorica, broj 170-108/15-1 od 02.12.2015. godine, Ministarstvo rada i socijalnog staranja, donosi

R J E Š E N J E

OVLAŠĆUJE SE D.O.O. "MONTINSPEKT" Bulevar Pera Ćetkovića 113, Podgorica, da može obavljati sledeće poslove iz zaštite i zdravlja na radu i to:

1. izradu akta o procjeni rizika, sa predlogom mjera za njihovo otklanjanje,
2. periodične preglede i ispitivanja sredstava za rad, električnih i drugih instalacija i sredstava i opreme lične zaštite na radu,
3. ispitivanje uslova radne sredine: fizičkih štetnosti (buka), osvijetljenost i mikroklima,
4. reviziju (ocjenu) tehničke dokumentacije sa aspekta primljenjenosti mjera zaštite, tehničkih propisa i standarda, radi utvrđivanja obezbijeđenosti zaštite zaposlenih u objektima za koje je urađena tehnička dokumentacija, za procese rada koji će se obavljati u njima,
5. osposobljavanje i provjeru osposobljenosti za bezbjedan rad zaposlenih i
6. poslovi iz člana 40 Zakona o zaštiti i zdravlju na radu:
   - savjetuje poslodavca pri planiranju, izboru i održavanju sredstava za rad i sredstava i opreme za ličnu zaštitu na radu;
   - savjetuje poslodavca kod opremanja i uređivanja radnog mjesta, uzimajući u obzir i uslove radne sredine;
   - učestvuje u izradi stručne podloge za akt o procjeni rizika;
   - organizuje predhodna i periodična ispitivanja uslova radne sredine (hemijskih, fizičkih i bioloških štetnosti, mikroklime i osvijetljenosti);
   - organizuje periodične preglede i ispitivanje sredstava za rad, električnih i drugih instalacija;
   - predlaže mjere za poboljšanje uslova rada, naročito na radnim mjestima sa posebnim uslovima rada, odnosno povećanim rizicima;
   - na svim poslovima kod poslodavca prati primjenu mjera zaštite i održavanja sredstava za rad i sredstava i opreme za ličnu zaštitu na radu u ispravnom stanju;
   - obezbjeđuje uputstva za bezbjedan rad i kontroliše njihovu primjenu;

Rimski trg br. 45, PC Vektra 81000 Podgorica
Tel: (+382) 20 482-148; Fax: (+382) 20 234-227
www.minradiss.gov.me

GEORGIOS KARKANIAS
PRESIDENT

03/12/18

iii) CONTRACTOR'S EQUIPMENT

The Tenderer shall provide adequate information to demonstrate clearly that it has the capability to meet the requirements for the key equipment listed in Volume I, Attachment 2 (Preliminary Programme). A separate Form shall be prepared for each item of equipment listed, or for alternative equipment proposed by the Tenderer. The Tenderer shall provide all the information requested below, to the extent possible. Fields with asterisk (*) shall be used for evaluation.

In case of a JVCA the form shall be submitted for each partner of the JVCA

Type of Equipment* TRANSPORT VEHICLE		
Equipment Information	Name of manufacturer DAIMLER CHRYSLER	Model and power rating ACTROS 3241 , 300KW
	Capacity* 17600 Kg, V=13 m3	Year of manufacture* 2004
Current Status	Current location BIJELO POLJE, MONTENEGRO	
	Details of current commitments	
Source	Indicate source of the equipment ☐ Owned ☒ Rented ☐ Leased ☐ Specially manufactured	

The following information shall be provided only for equipment not owned by the Tenderer.

Owner	Name of owner IGP FIDIJA d.o.o.	
	Address of owner STARA VAROS, BLOCK 7, 81000 PODGORICA	
	Telephone +382 (0) 20 621140	Contact name and title Ivan Blagojevic, Director
	Fax	Telex
Agreements	Details of rental / lease / manufacture agreements specific to the project	
	Company IGP FIDIJA d.o.o. is owner of specific equipment and it is willing to dispose it based on the "Letter of Intent" signed between KARKANIAS ENVIRONMENTAL TECHNOLOGY S.A. and IGP FIDIJA d.o.o.	

GEORGIOS KARKANIAS
PRESIDENT

03/12/18

Crna Gora SAOBRAĆAJNA DOZVOLA (MNE)
Montenegro ZA REGISTROVANO VOZILO
Registration Certificate / Certificat d'immatriculation

PG - BH 012
04.12.2008 / 14.02.2017 / 18.02.2018
IGP FIDUJA DOO
FODGORICA
DAIMLER CHRYSLER
ACTROS 3241
TERETNO VOZILO

PG - BH 012 017297910 PJ FODGORICA

GEORGIOS KARKANIAS
PRESIDENT

03/12/18

[redacted]

[redacted]

[redacted]

iii) CONTRACTOR'S EQUIPMENT

The Tenderer shall provide adequate information to demonstrate clearly that it has the capability to meet the requirements for the key equipment listed in Volume I, Attachment 2 (Preliminary Programme). A separate Form shall be prepared for each item of equipment listed, or for alternative equipment proposed by the Tenderer. The Tenderer shall provide all the information requested below, to the extent possible. Fields with asterisk (*) shall be used for evaluation.

In case of a JVCA the form shall be submitted for each partner of the JVCA

Type of Equipment* TRANSPORT VEHICLE		
Equipment Information	Name of manufacturer VOLVO / (MEILLER)	Model and power rating FH 16-520 , 385KW
	Capacity* 27300 Kg, V=22m3	Year of manufacture* 2000
Current Status	Current location PODGORICA, MONTENEGRO	
	Details of current commitments	
Source	Indicate source of the equipment ☐ Owned ☒ Rented ☐ Leased ☐ Specially manufactured	

The following information shall be provided only for equipment not owned by the Tenderer.

Owner	Name of owner IGP FIDIJA d.o.o.	
	Address of owner STARA VAROS, BLOCK 7, 81000 PODGORICA	
	Telephone +382 (0) 20 621140	Contact name and title Ivan Blagojevic, Director
	Fax	Telex
Agreements	Details of rental / lease / manufacture agreements specific to the project	
	Company IGP FIDIJA d.o.o. is owner of specific equipment and it is willing to dispose it based on the "Letter of Intent" signed between KARKANIAS ENVIRONMENTAL TECHNOLOGY S.A. and IGP FIDIJA d.o.o.	

GEORGIOS KARKANIAS
PRESIDENT

03/12/18

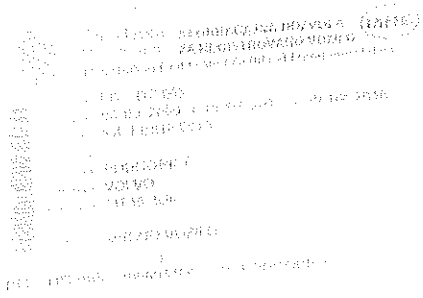

PRESIDENT

03/12/18

[illegible]	[illegible]
[illegible]	[illegible]
[illegible]	[illegible]
[illegible]	[illegible]
[illegible]	[illegible]
[illegible]	NAFTA.
[illegible]	CRVENA
[illegible]	2
[illegible]	[illegible]

[illegible] SDV

GEORGIOS KARKANIAS
PRESIDENT

03/12/18

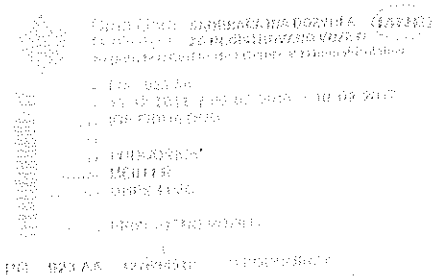

GEORGIOS KARRAMIAS
PRESIDENT

03/12/18

GEORGIOS [redacted]
PRESIDENT

03/12/18

iii) CONTRACTOR'S EQUIPMENT

The Tenderer shall provide adequate information to demonstrate clearly that it has the capability to meet the requirements for the key equipment listed in Volume I, Attachment 2 (Preliminary Programme). A separate Form shall be prepared for each item of equipment listed, or for alternative equipment proposed by the Tenderer. The Tenderer shall provide all the information requested below, to the extent possible. Fields with asterisk (*) shall be used for evaluation.

In case of a JVCA the form shall be submitted for each partner of the JVCA

Type of Equipment* TRANSPORT VEHICLE		
Equipment Information	Name of manufacturer MERCEDES BENZ	Model and power rating 4146K 8X4 , 300KW
	Capacity* 16700 Kg, V= 20 m3	Year of manufacture* 2004
Current Status	Current location PODGORICA, MONTENEGRO	
	Details of current commitments	
Source	Indicate source of the equipment ☐ Owned ☒ Rented ☐ Leased ☐ Specially manufactured	

The following information shall be provided only for equipment not owned by the Tenderer.

Owner	Name of owner IGP FIDIJA d.o.o.	
	Address of owner STARA VAROS, BLOCK 7, 81000 PODGORICA	
	Telephone +382 (0) 20 621140	Contact name and title Ivan Blagojevic, Director
	Fax	Telex
Agreements	Details of rental / lease / manufacture agreements specific to the project	
	Company IGP FIDIJA d.o.o. is owner of specific equipment and it is willing to dispose it based on the "Letter of Intent" signed between KARKANIAS ENVIRONMENTAL TECHNOLOGY S.A. and IGP FIDIJA d.o.o.	

GEORGIOS KARKANIAS
PRESIDENT

03/12/18

Crna Gora SAOBRAĆAJNA DOZVOLA MNE
Montenegro ZA REGISTROVANO VOZILO
Registration Certificate / Certificat D'immatriculation

A PG - FP 587
B 10.01.2008. / 09.02.2017. / 04.02.2018.
C.1.1 IGP FIDUA DOO
C.1.2
C.1.3 PODGORICA
D.1. MERCEDES BENZ
Tip varijanta 4145K 8X4
J TERETNO VOZILO

PG - FP 587 069086942 PJ PODGORICA

	D.3	
	E	WD9933041K949923
	P.1	16700
	G	14300
	L	4
	P.2/P.3	11946 / 300
	P.3	NAFTA
	R	BIJELA
	S.1/S.2	2
		2004

SDV

GEORGIOS KATRANIAS
PRESIDENT

03/12/18

iii) CONTRACTOR'S EQUIPMENT

The Tenderer shall provide adequate information to demonstrate clearly that it has the capability to meet the requirements for the key equipment listed in Volume I, Attachment 2 (Preliminary Programme). A separate Form shall be prepared for each item of equipment listed, or for alternative equipment proposed by the Tenderer. The Tenderer shall provide all the information requested below, to the extent possible. Fields with asterisk (*) shall be used for evaluation.

In case of a JVCA the form shall be submitted for each partner of the JVCA

Type of Equipment* TRANSPORT VEHICLE		
Equipment Information	Name of manufacturer MERCEDES BENZ	Model and power rating 4146K 8X4 , 335KW
	Capacity* 26273 Kg, V= 20 m3	Year of manufacture* 2007
Current Status	Current location BIJELA, TIVAT, MONTENEGRO	
	Details of current commitments	
Source	Indicate source of the equipment ☐ Owned ☒ Rented ☐ Leased ☐ Specially manufactured	

The following information shall be provided only for equipment not owned by the Tenderer.

Owner	Name of owner IGP FIDIJA d.o.o.	
	Address of owner STARA VAROS, BLOCK 7, 81000 PODGORICA	
	Telephone +382 (0) 20 621140	Contact name and title Ivan Blagojevic, Director
	Fax	Telex
Agreements	Details of rental / lease / manufacture agreements specific to the project	
	Company IGP FIDIJA d.o.o. is owner of specific equipment and it is willing to dispose it based on the "Letter of Intent" signed between KARKANIAS ENVIRONMENTAL TECHNOLOGY S.A. and IGP FIDIJA d.o.o.	

GEORGIOS [illegible]
PRESIDENT

03/12/18

Crna Gora SAOBRAĆAJNA DOZVOLA
Montenegro ZA REGISTROVANO VOZILO
Registration Certificate / Certificat D'immatriculation

A PG - FR 430
B/H1 14.01.2008. / 03.04.2017. / 27.03.2018.
C.1.1 IGP FIDIJA DOO
C.1.2
C.1.3 PODGORICA
Marka D1 MERCEDES BENZ
Tip/model D2 4146K 8X4

Vrsta voz. J TERETNO VOZILO

PG - FR 430 926096162 PJ PODGORICA

GEORGIOS KARKANTAS
PRESIDENT

03/12/18

[illegible]	D.3	WDB9323151L290341
Broj šasije	E	26273
Dozvoljena nosivost	F.1	14727
Mase prazna vozila	G	4
Broj osovina	L	11946 / 335
Zapremina/snaga motora	P.1/P.2	NAFTA
Vrsta goriva	P.3	
Boja vozila	R	BIJELA PLAVA
Broj mjesta za sjedenje	S.1/S.2	2
Godina proizvodnje		2007

SDV

GEORGIOS [illegible]
PRESIDENT

l 03/12/18

iii) CONTRACTOR'S EQUIPMENT

The Tenderer shall provide adequate information to demonstrate clearly that it has the capability to meet the requirements for the key equipment listed in Volume I, Attachment 2 (Preliminary Programme). A separate Form shall be prepared for each item of equipment listed, or for alternative equipment proposed by the Tenderer. The Tenderer shall provide all the information requested below, to the extent possible. Fields with asterisk (*) shall be used for evaluation.

In case of a JVCA the form shall be submitted for each partner of the JVCA

Type of Equipment* TRANSPORT VEHICLE		
Equipment Information	Name of manufacturer FAP	Model and power rating 1213/43-KK , 96KW
	Capacity* 6720 Kg, V= 8 m3	Year of manufacture* 1986
Current Status	Current location PODGORICA, MONTENEGRO	
	Details of current commitments	
Source	Indicate source of the equipment ☐ Owned ☒ Rented ☐ Leased ☐ Specially manufactured	

The following information shall be provided only for equipment not owned by the Tenderer.

Owner	Name of owner IGP FIDIJA d.o.o.	
	Address of owner STARA VAROS, BLOCK 7, 81000 PODGORICA	
	Telephone +382 (0) 20 621140	Contact name and title Ivan Blagojevic, Director
	Fax	Telex
Agreements	Details of rental / lease / manufacture agreements specific to the project	
	Company IGP FIDIJA d.o.o. is owner of specific equipment and it is willing to dispose it based on the "Letter of Intent" signed between KARKANIAS ENVIRONMENTAL TECHNOLOGY S.A. and IGP FIDIJA d.o.o.	

GEORGIOS KARKANIAS
PRESIDENT

03/12/18

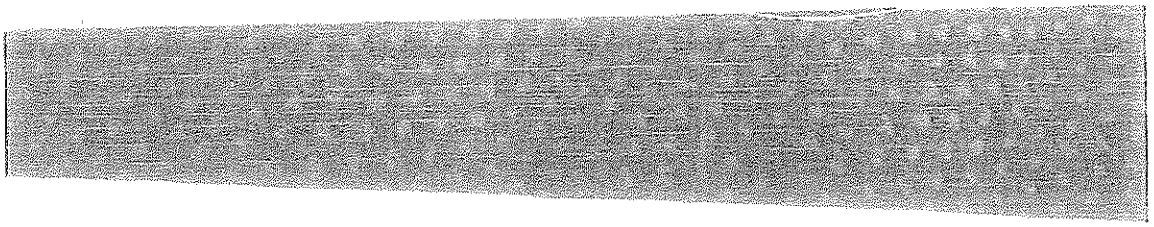

Crna Gora SAOBRAĆAJNA DOZVOLA MNE
Montenegro ZA REGISTROVANO VOZILO
Registration Certificate / Certificat D'immatriculation

A PG - BA 860
B/H 24.06.1987. / 23.11.2016. / 08.11.2017.
C.1.1 IGP FIDIJA DOO
C.1.2
C.1.3 PODGORICA
Marka D1 FAP
Tip/model D2 1213/43-KK

Vrsta voz. J TERETNO VOZILO

PG - BA 860 858593682 PJ PODGORICA

GEORGIOS KARAGIANNIS
PRESIDENT

l 03/12/18

Komercijalni opis	D.3	
Broj sasije	E	367005130036O6
Dozvoljena nosivost	F.1	6720
Masa praznog vozila	G	5080
Broj osovina	L	2
Zapremina/snaga motora	P.1/P.2	5675 / 96
Vrsta goriva	P.3	NAFTA
Boja vozila	R	ŽUTA
Broj mjesta za sjed/staj	S.1/S.2	2
Godina proizvodnje		1986

A. Registarska oznaka
B/H. Datum prve registracije / Datum registracije / Datum do kog važi saobraćajna dozvola
C.1.1. Prezime C.1.2. Ime C.1.3. Prebivalište

SDV

GEORGIOS KARYARIAS
PRESIDENT

03/12/18

iii) CONTRACTOR'S EQUIPMENT

The Tenderer shall provide adequate information to demonstrate clearly that it has the capability to meet the requirements for the key equipment listed in Volume I, Attachment 2 (Preliminary Programme). A separate Form shall be prepared for each item of equipment listed, or for alternative equipment proposed by the Tenderer. The Tenderer shall provide all the information requested below, to the extent possible. Fields with asterisk (*) shall be used for evaluation.

In case of a JVCA the form shall be submitted for each partner of the JVCA

Type of Equipment* TRANSPORT VEHICLE		
Equipment Information	Name of manufacturer MERCEDES BENZ	Model and power rating 914K , 97KW
	Capacity* 4240 Kg, V= 3 m3	Year of manufacture* 1992
Current Status	Current location PODGORICA, MONTENEGRO	
	Details of current commitments	
Source	Indicate source of the equipment ☐ Owned ☒ Rented ☐ Leased ☐ Specially manufactured	

The following information shall be provided only for equipment not owned by the Tenderer.

Owner	Name of owner IGP FIDIJA d.o.o.	
	Address of owner STARA VAROS, BLOCK 7, 81000 PODGORICA	
	Telephone +382 (0) 20 621140	Contact name and title Ivan Blagojevic, Director
	Fax	Telex
Agreements	Details of rental / lease / manufacture agreements specific to the project	
	Company IGP FIDIJA d.o.o. is owner of specific equipment and it is willing to dispose it based on the "Letter of Intent" signed between KARKANIAS ENVIRONMENTAL TECHNOLOGY S.A. and IGP FIDIJA d.o.o.	

GEORGIOS KARKANIAS
PRESIDENT

03/12/08

Crna Gora SAOBRAĆAJNA DOZVOLA MNE
Montenegro ZA REGISTROVANO VOZILO
Registration Certificate / Certificat D'immatriculation

A PG - BE 885
B 11.11.2008. / 15.03.2017. / 13.03.2018.
C.1.1 IGP FIDIJA DOO
C.1.2
C.1.3 PODGORICA
D.1 MERCEDES BENZ
D.2 914 K
J TERETNO VOZILO

PG - BE 885 600292241 PJ PODGORICA

Kategorija vozila	D.3	
Broj šasije	E	WDB6740441 5814594
Dozvoljena nosivost	F.1	4240
Masa praznog vozila	G	4950
Broj osovina	L	2
Zapremina radnog motora	P.1/P.2	5958 / 97
Vrsta goriva	P.3	NAFTA
Boja vozila	R	BIJELA PLAVA
Broj mjesta za sjedenje	S.1/S.2	3
Godina proizvodnje		1992

SDV

GEORGIOS [illegible]ANIAS
PRESIDENT

03/12/18

iii) CONTRACTOR'S EQUIPMENT

The Tenderer shall provide adequate information to demonstrate clearly that it has the capability to meet the requirements for the key equipment listed in Volume I, Attachment 2 (Preliminary Programme). A separate Form shall be prepared for each item of equipment listed, or for alternative equipment proposed by the Tenderer. The Tenderer shall provide all the information requested below, to the extent possible. Fields with asterisk (*) shall be used for evaluation.

In case of a JVCA the form shall be submitted for each partner of the JVCA

Type of Equipment* VIBRATORY PLATE		
Equipment Information	Name of manufacturer MASALTA ENGINEERING Co	Model and power rating No303, "MR 68H", 2.2KW
	Capacity* 68Kg	Year of manufacture* 2012
Current Status	Current location PODGORICA, MONTENEGRO	
	Details of current commitments	
Source	Indicate source of the equipment ☐ Owned ☒ Rented ☐ Leased ☐ Specially manufactured	

The following information shall be provided only for equipment not owned by the Tenderer.

Owner	Name of owner IGP FIDIJA d.o.o.	
	Address of owner STARA VAROS, BLOCK 7, 81000 PODGORICA	
	Telephone +382 (0) 20 621140	Contact name and title Ivan Blagojevic, Director
	Fax	Telex
Agreements	Details of rental / lease / manufacture agreements specific to the project Company IGP FIDIJA d.o.o. is owner of specific equipment and it is willing to dispose it based on the "Letter of Intent" signed between KARKANIAS ENVIRONMENTAL TECHNOLOGY S.A. and IGP FIDIJA d.o.o.	

GEORGIOS KARKANIAS
PRESIDENT

03/12/18

MONTINSPEKT d.o.o. Podgorica
TEHNIČKA ISPITIVANJA, KONTROLA KVALITETA I KVANTITETA, INŽENJERING
Podgorica, Bulevar Pera Ćetkovića 113; tel./fax: 020 656-920; 069 019 755; e-mail: montinspekt@t-com.me

Broj: 386-03/04/17
Podgorica, 18.08.2017. god.

STRUČNI NALAZ
O PREGLEDU I ISPITIVANJU SREDSTVA ZA RAD

SREDSTVO ZA RAD: VIBRO NABIJAČ
NARUČILAC/VLASNIK : " IGP FIDIJA " D.O.O. Podgorica
MJESTO I DATUM PREGLEDA I ISPITIVANJA: Podgorica , 18.08.2017.god.

I - A/ OPŠTI PODACI -
Proizvođač: " Masalta Engineering Co "- China
Tip: " MR 68H"
Fabr.br.: HO684121124
Interni broj: 303
God.proizvodnje:2012
Pogon: 4-otaktni benzinski motor
Upravljanje: Ručno

II - REZULTATI PREGLEDA I ISPITIVANJA:

- Stanje pogonskog i prenosnog mehanizma	ZADOVOLJAVA
- Stanje kontrolnih uređaja	ZADOVOLJAVA
- Stanje uređaja za uključenje, upravljanje i isključenje	ZADOVOLJAVA
- Antikorozivna zaštita	ZADOVOLJAVA
- Stanje metalne konstrukcije	ZADOVOLJAVA

III - NAPOMENA :
A)Pregled i ispitivanje su izvršena u skladu sa Zakonom o zaštiti i zdravlju na radu (SL. CG br.:34/14) i Pravilnika o postupku i rokovima za vršenje periodičnih pregleda i ispitivanja spedstava za rad, sredstava i opreme lične zaštite na radu i uslova radne sredine (SL. RCG br.: 71/05)
B) Stručni nalaz ima važnost 36 mjeseci ukoliko nije došlo do remonta sredstva za rad.
C) Sredstvo za rad može održavati samo stručno lice mašinske struke uz korišćenje kvalitetnih rezervnih djelova.

IV - OCJENA: NA NAVEDENOM SREDSTVU ZA RAD SU OBEZBIJEĐENE PROPISANE MJERE I NORMATIVI ZAŠTITE NA RADU.

V - NAPOMENA :
Pregled i ispitivanje su izvršena u skladu sa Zakonom o zaštiti i zdravlju na radu („Sl. CG" br.:34/14),
- Pravilnika o postupku i rokovima za vršenje periodičnih pregleda i ispitivanja sredstava za rad, sredstava i opreme lične zaštite na radu i uslova radne sredine(„Sl. RCG" br.: 71/05);
- Stručni nalaz ima važnost 36 mjeseci ukoliko nije došlo do remonta sredstva za rad.
- Sredstvo za rad može održavati samo stručno lice mašinske i elektro struke uz korišćenje kvalitetnih rezervnih djelova.

Dostavljeno :

"Naručiocu " - x2
a/a

Pregled i ispitivanje izvršili:

Šrbek Branislav, dipl. el.inž.
Drašković Slobodan, dipl.el.inž
Brčić Marjan, dipl.maš.inž.
Popović Vesna, dipl.inž.grad.

MONTINSPEKT D.O.O. PODGORICA

Ova kontrola/ispitivanje izvršeno je prema našem najboljem znanju i savjesti i odnosi se isključivo na stanje u vrijeme izvršenja naše kontrole. Stručni nalaz je dozvoljeno reprodukovati samo kao cjelinu uz dozvolu izdavača i isti je valjan ukoliko je originalno potpisan i pečatom ovjeren

GEORGIOS KARKANIAS
PRESIDENT

03/12/18

iii) CONTRACTOR'S EQUIPMENT

The Tenderer shall provide adequate information to demonstrate clearly that it has the capability to meet the requirements for the key equipment listed in Volume I, Attachment 2 (Preliminary Programme). A separate Form shall be prepared for each item of equipment listed, or for alternative equipment proposed by the Tenderer. The Tenderer shall provide all the information requested below, to the extent possible. Fields with asterisk (*) shall be used for evaluation.

In case of a JVCA the form shall be submitted for each partner of the JVCA

Type of Equipment* VIBRATORY PLATE		
Equipment Information	Name of manufacturer MASALTA ENGINEERING Co	Model and power rating No384, "MR 68H", 2.2KW
	Capacity* 68Kg	Year of manufacture* 2012
Current Status	Current location PODGORICA, MONTENEGRO	
	Details of current commitments	
Source	Indicate source of the equipment ☐ Owned ☒ Rented ☐ Leased ☐ Specially manufactured	

The following information shall be provided only for equipment not owned by the Tenderer.

Owner	Name of owner IGP FIDIJA d.o.o.	
	Address of owner STARA VAROS, BLOCK 7, 81000 PODGORICA	
	Telephone +382 (0) 20 621140	Contact name and title Ivan Blagojevic, Director
	Fax	Telex
Agreements	Details of rental / lease / manufacture agreements specific to the project	
	Company IGP FIDIJA d.o.o. is owner of specific equipment and it is willing to dispose it based on the "Letter of Intent" signed between KARKANIAS ENVIRONMENTAL TECHNOLOGY S.A. and IGP FIDIJA d.o.o.	

GEORGIOS KARKANIAS
PRESIDENT

03/12/18

MONTINSPEKT d.o.o. Podgorica
TEHNIČKA ISPITIVANJA, KONTROLA KVALITETA I KVANTITETA, INŽENJERING
Podgorica, Bulevar Pera Ćetkovića 113; tel./fax: 020 656-920; 069 019 755; e-mail: montinspekt@t-com.me

Broj: 386-06/04/17
Podgorica, 18.08.2017. god.

STRUČNI NALAZ
O PREGLEDU I ISPITIVANJU SREDSTVA ZA RAD

SREDSTVO ZA RAD: VIBRO NABIJAČ
NARUČILAC/VLASNIK : " IGP FIDIJA " D.O.O. Podgorica
MJESTO I DATUM PREGLEDA I ISPITIVANJA: Podgorica , 18.08.2017.god.

I - A/ OPŠTI PODACI -
Proizvodač: " Masalta Engineering Co "- China
Tip: " MR 68H"
Fabr.br.: -
Interni broj: 384
God.proizvodnje:-
Pogon: 4-otaktni benzinski motor
Upravljanje: Ručno

II - REZULTATI PREGLEDA I ISPITIVANJA:

- Stanje pogonskog i prenosnog mehanizma	ZADOVOLJAVA
- Stanje kontrolnih uređaja	ZADOVOLJAVA
- Stanje uređaja za uključenje, upravljanje i isključenje	ZADOVOLJAVA
- Antikorozivna zaštita	ZADOVOLJAVA
- Stanje metalne konstrukcije	ZADOVOLJAVA

III - NAPOMENA :
A)Pregled i ispitivanje su izvršena u skladu sa Zakonom o zaštiti i zdravlju na radu (SL. CG br.:34/14) i Pravilnika o postupku i rokovima za vršenje periodičnih pregleda i ispitivanja spedstava za rad, sredstava i opreme lične zaštite na radu i uslova radne sredine (SL. RCG br.: 71/05)
B) Stručni nalaz ima važnost 36 mjeseci ukoliko nije došlo do remonta sredstva za rad.
C) Sredstvo za rad može održavati samo stručno lice mašinske struke uz korišćenje kvalitetnih rezervnih djelova.

IV - OCJENA: NA NAVEDENOM SREDSTVU ZA RAD SU OBEZBIJEĐENE PROPISANE MJERE I NORMATIVI ZAŠTITE NA RADU.

V - NAPOMENA :
- Pregled i ispitivanje su izvršena u skladu sa Zakonom o zaštiti i zdravlju na radu („SL. CG" br.:34/14),
- Pravilnika o postupku i rokovima za vršenje periodičnih pregleda i ispitivanja sredstava za rad, sredstava i opreme lične zaštite na radu i uslova radne sredine(„SL. RCG" br.: 71/05);
- Stručni nalaz ima važnost 36 mjeseci ukoliko nije došlo do remonta sredstva za rad.
- Sredstvo za rad može održavati samo stručno lice mašinske i elektro struke uz korišćenje kvalitetnih rezervnih djelova.

Dostavljeno :

"Naručioc " - x2
n/a

Pregled i ispitivanje izvršili:
Šebek Branislav, dipl. el.inž.
Drašković Slobodan, dipl.el.inž
Brčić Marjan, dipl.maš.inž.
Popović Vesna, dipl.inž.grad.

Ova kontrola/ispitivanje izvršeno je prema našem najboljem znanju i savjesti i odnosi se isključivo na stanje u vrijeme izvršenja naše kontrole. Stručni nalaz je dozvoljeno reprodukovati samo kao cjelinu uz dozvolu izdavača i isti je valjan ukoliko je originalno potpisan i pečatom ovjeren

GEORGIOS KARKANIAS
PRESIDENT

03/12/18

iii) CONTRACTOR'S EQUIPMENT

The Tenderer shall provide adequate information to demonstrate clearly that it has the capability to meet the requirements for the key equipment listed in Volume I, Attachment 2 (Preliminary Programme). A separate Form shall be prepared for each item of equipment listed, or for alternative equipment proposed by the Tenderer. The Tenderer shall provide all the information requested below, to the extent possible. Fields with asterisk (*) shall be used for evaluation.

In case of a JVCA the form shall be submitted for each partner of the JVCA

Type of Equipment* VIBRATORY PLATE		
Equipment Information	Name of manufacturer MASALTA ENGINEERING Co	Model and power rating No072, "MR 68H", 9.5KW
	Capacity* 47Kg	Year of manufacture* 2012
Current Status	Current location PODGORICA, MONTENEGRO	
	Details of current commitments	
Source	Indicate source of the equipment ☐ Owned ☒ Rented ☐ Leased ☐ Specially manufactured	

The following information shall be provided only for equipment not owned by the Tenderer.

Owner	Name of owner IGP FIDIJA d.o.o.	
	Address of owner STARA VAROS, BLOCK 7, 81000 PODGORICA	
	Telephone +382 (0) 20 621140	Contact name and title Ivan Blagojevic, Director
	Fax	Telex
Agreements	Details of rental / lease / manufacture agreements specific to the project	
	Company IGP FIDIJA d.o.o. is owner of specific equipment and it is willing to dispose it based on the "Letter of Intent" signed between KARKANIAS ENVIRONMENTAL TECHNOLOGY S.A. and IGP FIDIJA d.o.o.	

GEORGIOS KARKANIAS
PRESIDENT

03/12/18

MONTINSPEKT d.o.o. Podgorica
TEHNIČKA ISPITIVANJA, KONTROLA KVALITETA I KVANTITETA, INŽENJERING
Podgorica, Bulevar Pera Četkovića 113; tel./fax: 020 656-920; 069 019 755; e-mail: montinspekt@t-com.me

Broj: 386-05/04/17
Podgorica, 18.08.2017. god.

STRUČNI NALAZ
O PREGLEDU I ISPITIVANJU SREDSTVA ZA RAD

SREDSTVO ZA RAD: VIBRO NABIJAČ
NARUČILAC/VLASNIK : " ICP FIDIJA " D.O.O. Podgorica
MJESTO I DATUM PREGLEDA I ISPITIVANJA: Podgorica , 18.08.2017.god.

I - A/ OPŠTI PODACI -
Proizvodač: " Masalta Engineering Co "- China
Tip: " MR 68II"
Fabr.br.: -
Interni broj: 072
God.proizvodnje:-
Pogon: SUS-Dizel
Upravljanje: Ručno

II - REZULTATI PREGLEDA I ISPITIVANJA:

- Stanje pogonskog i prenosnog mehanizma	ZADOVOLJAVA
- Stanje kontrolnih uređaja	ZADOVOLJAVA
- Stanje uređaja za uključenje, upravljanje i isključenje	ZADOVOLJAVA
- Antikorozivna zaštita	ZADOVOLJAVA
- Stanje metalne konstrukcije	ZADOVOLJAVA

III - NAPOMENA :
A)Pregled i ispitivanje su izvršena u skladu sa Zakonom o zaštiti i zdravlju na radu (SL. CG br.:34/14) i Pravilnika o postupku i rokovima za vršenje periodičnih pregleda i ispitivanja spedstava za rad, sredstava i opreme lične zaštite na radu i uslova radne sredine (SL. RCG br.: 71/05)
B) Stručni nalaz ima važnost 36 mjeseci ukoliko nije došlo do remonta sredstva za rad.
C) Sredstvo za rad može održavati samo stručno lice mašinske struke uz korišćenje kvalitetnih rezervnih djelova.

IV - OCJENA: NA NAVEDENOM SREDSTVU ZA RAD SU OBEZBIJEDENE PROPISANE MJERE I NORMATIVI ZAŠTITE NA RADU.

V - NAPOMENA :
- Pregled i ispitivanje su izvršena u skladu sa Zakonom o zaštiti i zdravlju na radu („Sl. CG" br.:34/14),
- Pravilnika o postupku i rokovima za vršenje periodičnih pregleda i ispitivanja sredstava za rad, sredstava i opreme lične zaštite na radu i uslova radne sredine(„Sl. RCG" br.: 71/05);
- Stručni nalaz ima važnost 36 mjeseci ukoliko nije došlo do remonta sredstva za rad.
- Sredstvo za rad može održavati samo stručno lice mašinske i elektro struke uz korišćenje kvalitetnih rezervnih djelova.

Dostavljeno :

"Naručiocu " - x2
a/a

Pregled i ispitivanje izvršili:

Šebek Branislav, dipl, el.inž.

Draskovic Slobodan, dipl.el.inž

Brčić Marjan, dipl.maš.inž.

Popovic Vesna, dipl.inž.grad.

Ova kontrola/ispitivanje izvršeno je prema našem najboljem znanju i savjesti i odnosi se isključivo na stanje u vrijeme izvršenja naše kontrole. Stručni nalaz je dozvoljeno reprodukovati samo kao cjelinu uz dozvolu izdavaća i isti je valjan ukoliko je originalno potpisan i pečatom ovjeren.

GEORGIOS KARKANIAS
PRESIDENT

03/12/18

iii) CONTRACTOR'S EQUIPMENT

The Tenderer shall provide adequate information to demonstrate clearly that it has the capability to meet the requirements for the key equipment listed in Volume I, Attachment 2 (Preliminary Programme). A separate Form shall be prepared for each item of equipment listed, or for alternative equipment proposed by the Tenderer. The Tenderer shall provide all the information requested below, to the extent possible. Fields with asterisk (*) shall be used for evaluation.

In case of a JVCA the form shall be submitted for each partner of the JVCA

Type of Equipment* VIBRATORY PLATE		
Equipment Information	Name of manufacturer WACKER	Model and power rating DPU 6055, 9.3KW
	Capacity* 47Kg	Year of manufacture* 2007
Current Status	Current location BIJELO POLJE, MONTENEGRO	
	Details of current commitments	
Source	Indicate source of the equipment ☐ Owned ☒ Rented ☐ Leased ☐ Specially manufactured	

The following information shall be provided only for equipment not owned by the Tenderer.

Owner	Name of owner IGP FIDIJA d.o.o.	
	Address of owner STARA VAROS, BLOCK 7, 81000 PODGORICA	
	Telephone +382 (0) 20 621140	Contact name and title Ivan Blagojevic, Director
	Fax	Telex
Agreements	Details of rental / lease / manufacture agreements specific to the project	
	Company IGP FIDIJA d.o.o. is owner of specific equipment and it is willing to dispose it based on the "Letter of Intent" signed between KARKANIAS ENVIRONMENTAL TECHNOLOGY S.A. and IGP FIDIJA d.o.o.	

GEORGIOS KARKANIAS
PRESIDENT

08/12/18

MONTINSPEKT d.o.o. Podgorica
TEHNIČKA ISPITIVANJA, KONTROLA KVALITETA I KVANTITETA, INŽENJERING
Podgorica, Bulevar Pera Četkoviča 113; tel./fax: 020 656-920; 069 019 755; e-mail: montinspekt@t-com.me

Broj: 386-04/04/17
Podgorica, 18.08.2017. god.

STRUČNI NALAZ
O PREGLEDU I ISPITIVANJU SREDSTVA ZA RAD

SREDSTVO ZA RAD: VIBRO NABIJAČ
NARUČILAC/VLASNIK : " IGP FIDIJA " D.O.O. Podgorica
MJESTO I DATUM PREGLEDA I ISPITIVANJA: Podgorica , 18.08.2017.god.

I - A/ OPŠTI PODACI -

Proizvođač: " Wacker "- Germany
Tip: " DPU 6055"
Fabr.br.: 0610053
Interni broj:-
God.proizvodnje:-
Pogon: SUS-Dizel
Upravljanje; Ručno

II - REZULTATI PREGLEDA I ISPITIVANJA:

- Stanje pogonskog i prenosnog mehanizma	ZADOVOLJAVA
- Stanje kontrolnih uredjaja	ZADOVOLJAVA
- Stanje uredjaja za uključenje, upravljanje i isključenje	ZADOVOLJAVA
- Antikorozivna zaštita	ZADOVOLJAVA
- Stanje metalne konstrukcije	ZADOVOLJAVA

III - NAPOMENA :

A)Pregled i ispitivanje su izvršena u skladu sa Zakonom o zaštiti i zdravlju na radu (SL. CG br.:34/14) i Pravilnika o postupku i rokovima za vršenje periodičnih pregleda i ispitivanja spedstava za rad, sredstava i opreme lične zaštite na radu i uslova radne sredine (SL. RCG br.: 71/05)
B) Stručni nalaz ima važnost 36 mjeseci ukoliko nije došlo do remonta sredstva za rad.
C) Sredstvo za rad može održavati samo stručno lice mašinske struke uz korišćenje kvalitetnih rezervnih djelova.

IV - OCJENA: NA NAVEDENOM SREDSTVU ZA RAD SU OBEZBIJEĐENE PROPISANE MJERE I NORMATIVI ZAŠTITE NA RADU.

V - NAPOMENA :

- Pregled i ispitivanje su izvršena u skladu sa Zakonom o zaštiti i zdravlju na radu („Sl. CG" br.:34/14), Pravilnika o postupku i rokovima za vršenje periodičnih pregleda i ispitivanja sredstava za rad, sredstava i opreme lične zaštite na radu i uslova radne sredine(„Sl. RCG" br.: 71/05);
- Stručni nalaz ima važnost 36 mjeseci ukoliko nije došlo do remonta sredstva za rad.
- Sredstvo za rad može održavati samo stručno lice mašinske i elektro struke uz korišćenje kvalitetnih rezervnih djelova.

Dostavljeno :

"Naručiocu " x2
a/a

Pregled i ispitivanje izvršili:

Šćepić Stanislav, dipl. el.inž.

Dražović Slobodan, dipl.el.inž

Brčić Mirjan, dipl.maš.inž.

Popović Vesna, dipl.inž.grad.

Ovo kontrolo/ispitivanje izvršeno je prema našem najboljem znanju i savjesti i odnosi se isključivo na stanje u vrijeme izvršenja naše kontrole. Stručni nalaz je dozvoljeno reprodukovati samo kao cjelinu uz dozvolu izdavača i isti je valjan ukoliko je originalno potpisan i pečatom ovjeren.

GEORGIOS KARAMITAS
PRESIDENT

l 03/12/18

iii) CONTRACTOR'S EQUIPMENT

The Tenderer shall provide adequate information to demonstrate clearly that it has the capability to meet the requirements for the key equipment listed in Volume I, Attachment 2 (Preliminary Programme). A separate Form shall be prepared for each item of equipment listed, or for alternative equipment proposed by the Tenderer. The Tenderer shall provide all the information requested below, to the extent possible. Fields with asterisk (*) shall be used for evaluation.

In case of a JVCA the form shall be submitted for each partner of the JVCA

Type of Equipment* VIBRATORY ROLLER		
Equipment Information	Name of manufacturer ROBERT AEBI	Model and power rating DV 30 , 12.4KW
	Capacity* 3500Kg, Roller width=120cm	Year of manufacture* 1990
Current Status	Current location BIJELA, TIVAT, MONTENEGRO	
	Details of current commitments	
Source	Indicate source of the equipment ☐ Owned ☒ Rented ☐ Leased ☐ Specially manufactured	

The following information shall be provided only for equipment not owned by the Tenderer.

Owner	Name of owner IGP FIDIJA d.o.o.	
	Address of owner STARA VAROS, BLOCK 7, 81000 PODGORICA	
	Telephone +382 (0) 20 621140	Contact name and title Ivan Blagojevic, Director
	Fax	Telex
Agreements	Details of rental / lease / manufacture agreements specific to the project	
	Company IGP FIDIJA d.o.o. is owner of specific equipment and it is willing to dispose it based on the "Letter of Intent" signed between KARKANIAS ENVIRONMENTAL TECHNOLOGY S.A. and IGP FIDIJA d.o.o.	

GEORGIOS KARKANIAS
PRESIDENT

03/12/18

MONTINSPEKT d.o.o. Podgorica
TEHNIČKA ISPITIVANJA, KONTROLA KVALITETA I KVANTITETA, INŽENJERING
Podgorica, Bulevar Pera Ćetkovića 113, tel/ fax: 020 656-920; 069 019 755; e-mail: montinspekt@t-com.me

Broj: 386-02/04/17
Podgorica, 18.08.2017. god.

STRUČNI NALAZ
O PREGLEDU I ISPITIVANJU SREDSTVA ZA RAD

SREDSTVO ZA RAD: VALJAK
NARUČILAC/VLASNIK : " IGP FIDIJA " D.O.O. Podgorica
MJESTO I DATUM PREGLEDA I ISPITIVANJA: Podgorica , 18.08.2017.god.

I - A/ OPŠTI PODACI -
Proizvođač: " Robert Aebi "- Italia
Tip: " DV 30 "
Fabr.br.: 4861C124
Interni broj: -
God.proizvodnje: -
Pogon: SUS-Dizel
Upravljanje: iz kabine

II - REZULTATI PREGLEDA I ISPITIVANJA:

STANJE METALNE KONSTRUKCIJE:..... ZADOVOLJAVA
STANJE UREĐAJA ZA UKLJ., UPRAV. I ISKLJUČIV. .....ZADOVOLJAVA
MEHANIČKA ZAŠTITA ROTACIONIH I POKRETNIH ELEMENATA..... ZADOVOLJAVA
ZVUČNA I SVJETLOSNA SIGNALIZACIJA.....ZADOVOLJAVA
STANJE PNEUMATSKE INSTALACIJE..... ZADOVOLJAVA
STANJE HIDRAULIČNE INSTALACIJE..... ZADOVOLJAVA
STABILNOST SREDSTVA..... ZADOVOLJAVA
POGONSKI UREĐAJ:..... ZADOVOLJAVA
KOČIONI UREĐAJ:..... ZADOVOLJAVA

III - NAPOMENA :
A)Pregled i ispitivanje su izvršena u skladu sa Zakonom o zaštiti i zdravlju na radu (Sl.. CG br.:34/14) i Pravilnika o postupku i rokovima za vršenje periodičnih pregleda i ispitivanja spedstava za rad, sredstava i opreme lične zaštite na radu i uslova radne sredine (SL. RCG br.: 71/05)
B) Stručni nalaz ima važnost 36 mjeseci ukoliko nije došlo do remonta sredstva za rad.
C) Sredstvo za rad može održavati samo stručno lice mašinske struke uz korišćenje kvalitetnih rezervnih djelova.

IV - OCJENA: NA NAVEDENOM SREDSTVU ZA RAD SU OBEZBIJEĐENE PROPISANE MJERE I NORMATIVI ZAŠTITE NA RADU.

V - NAPOMENA :
- Pregled i ispitivanje su izvršena u skladu sa Zakonom o zaštiti i zdravlju na radu („Sl. CG" br.:34/14),
- Pravilnika o postupku i rokovima za vršenje periodičnih pregleda i ispitivanja sredstava za rad, sredstava i opreme lične zaštite na radu i uslova radne sredine(„Sl. RCG" br.: 71/05);
- Stručni nalaz ima važnost 36 mjeseci ukoliko nije došlo do remonta sredstva za rad.
- Sredstvo za rad može održavati samo stručno lice mašinske i elektro struke uz korišćenje kvalitetnih rezervnih djelova.

Pregled i ispitivanje izvršili:
Šebek Miranislav, dipl. el.inž.
Drašković Slobodan, dipl.el.inž
Brnović Mirjan, dipl.maš.inž.
Popović Vesna, dipl.inž.grad.

Dostavljeno :
"Naručiocu " - x2
a/a

MONTINSPEKT d.o.o. Podgorica

Ova kontrola/ispitivanje izvršeno je prema našem najboljem znanju i savjesti i odnosi se isključivo na stanje u vrijeme izvršenja naše kontrole. Stručni nalaz je dozvoljeno reprodukovati samo kao cjelinu uz dozvolu izdavača i isti je važan ukoliko je originalno potpisan i pečatom ovjeren.

GEORGIOS KARRAMAS
PRESIDENT

03/12/18

DANILOVGRAD MUNICIPAL INFRASTRUCTURE
CONSTRUCTION OF WASTEWATER PLANT

KARKANIAS

Explanation Letter of proposed equipment

This letter refers to explanation of proposed equipment and specifically vibratory Roller.

In place of one Vibratory Plate, we propose one Vibratory Roller.
Vibratory Roller "ROBERT AEBI DV 30", will have the same or better capacity and sufficient power as the vibratory plate. Also, is suitable to be used and be effective and faster in situations and positions that vibratory plate cannot be the same efficient.

Karkanias Environmental Technology SA.
Giorgos Karkanias, President

KARKANIAS ENVIRONMENTAL TECHNOLOGY S.A.
INDUSTRIAL AREA OF LARISA - GREECE
POSTAL CODE 41004, P.O. BOX 3053
TEL.: +30 2410 541386 - FAX: +30 2410 541354
Email: info@karkanias.gr
TAX NUMBER: 095244711
REGISTRATION NUMBER: 46779/31/B/01/12

03/12/18

iii) CONTRACTOR'S EQUIPMENT

The Tenderer shall provide adequate information to demonstrate clearly that it has the capability to meet the requirements for the key equipment listed in Volume I, Attachment 2 (Preliminary Programme). A separate Form shall be prepared for each item of equipment listed, or for alternative equipment proposed by the Tenderer. The Tenderer shall provide all the information requested below, to the extent possible. Fields with asterisk (*) shall be used for evaluation.

In case of a JVCA the form shall be submitted for each partner of the JVCA

Type of Equipment* PREFABRICATED FORMWORK		
Equipment Information	Name of manufacturer HUNNEBECK	Model and power rating METAL FORMWORK PANELS ALUMINIUM CONSTRUCTION AND WOODEN TABLES
	Capacity* WALL FORMWORK= 700m2 PLATE FORMWORK= 1500m2	Year of manufacture* 2010 - 2016
Current Status	Current location BIJELA, TIVAT, MONTENEGRO	
	Details of current commitments	
Source	Indicate source of the equipment ☐ Owned ☒ Rented ☐ Leased ☐ Specially manufactured	

The following information shall be provided only for equipment not owned by the Tenderer.

Owner	Name of owner IGP FIDIJA d.o.o.	
	Address of owner STARA VAROS, BLOCK 7, 81000 PODGORICA	
	Telephone +382 (0) 20 621140	Contact name and title Ivan Blagojevic, Director
	Fax	Telex
Agreements	Details of rental / lease / manufacture agreements specific to the project	
	Company IGP FIDIJA d.o.o. is owner of specific equipment and it is willing to dispose it based on the "Letter of Intent" signed between KARKANIAS ENVIRONMENTAL TECHNOLOGY S.A. and IGP FIDIJA d.o.o.	

GEORGIOS KARKANIAS
PRESIDENT

03/12/18

Sales Invoice

Invoice No.	50261578
Date	01.03.2016
Order Type	DE HDE Sale Order
Order Number	21139931
Customer No.	1016209

In reply refer to

HONNEB

Page

Hannebeck Deutschland GmbH
Postfach 194461, 40855 Ratingen
Fidina

Stara Varos, Blok
ME 81000 Podgorica

Delivery Address
Fidina
Stara Varos
Blok 2
81000 Podgorica ME

Accounting Month	
Ex warehouse	VOC HSE DE HCF Ratingen SALE
To warehouse	
Representative	Montenegro
Your Contact	Regaming, Carmen
Phone	(02102) 937-31
Delivery Conditions	CPT PODGORICA
Your order number	by mail [illegible]
Your VAT reg. no.	

Sum of articles according to list
Total
Tax 0.00%
Invoice Amount

Payment: Up to 01.03.2016 without deduction

Invoice amount	Cash discount amount	Net amount	Due date	weight KG
[illegible] 486,91 EUR			01.03.2016	4.665,842

Hannebeck Deutschland GmbH
Postfach 194461, 40855 Ratingen
Schlesische Str. 40855 Ratingen
Phone [illegible]
Fax [illegible]
Registry Court [illegible] Registered Office: Ratingen
Bank Details
Commission Hannebeck [illegible]

Manager: Martin Hochberger
VAT-ID-NO.: DE812774741
Tax-no.: 147/5833/1470

991
09.03.16
335

Our Matrix [illegible] supplied under [illegible] Conditions of Certificate [illegible]

Ohra Gora Administrativo Finansija
UPRAVA CARINA
PODGORICA

03/12/18

Sales Invoice

Invoice No. 90261378
Date 01.03.2016
Order Type DE HDE Sale Order
Order Number 2113931
Customer No. 1916206

In reply refer to

HUNNEBECK

Page 2 of

Item Number	Description	N	Price PR	Qty	Position-weight	Total Price EUR	Total Value EUR
DN: 161557140 dated 01.03.16, loaded on 01.03.16 ex stockyard HBK DE HDE Darmstadt HIRE							
1092 RASTO/TAKKO-FORMWORK							
[illegible]	TAKKO-Panel 45 x 120	U		KG4	119,000	96,93	[illegible]
[illegible]	Customs Tariff No. 7308400[illegible] Country of Origin PL						
[illegible]	TAKKO-Panel 90 x 120	U		KG4	[illegible]	116,36	[illegible]
[illegible]	Customs Tariff No. 7308400[illegible] Country of Origin PL						
[illegible]	TAKKO-Panel 75 x 120	U		KG4	101,027	113,36	[illegible]
[illegible]	Customs Tariff No. 7308400[illegible] Country of Origin PL						
[illegible]	TAKKO-Panel 70 x 120	U		KG4	[illegible]	[illegible]	[illegible]
	Customs Tariff No. 7308402[illegible] Country of Origin PL				68,249	107,07	[illegible]
1076 TOPEC-FORMWORK							
[illegible]	PANEL 180/180 POWD.COAT	U		KG4	79	392,309	307,59	[illegible]
[illegible]	Customs Tariff No. 76[illegible] Country of Origin DE						
[illegible]	TOPEC C GIANT PANEL 180/180	U		KG4	96	2640,792	344,21	[illegible]
	Customs Tariff No. 7610[illegible] Country of Origin DE						
						Total 1092 RASTO/TAKKO-FORMWORK	[illegible]
						Total 1076 TOPEC-FORMWORK	[illegible]
						Total (net)	28.195,8[illegible]
							30.366,91

Payment
[illegible] days net 30 days

The Exporter of the products covered by [illegible] Customs authorization No. DE/2600/EA/0002; declares that, except where otherwise clearly indicated, these products are of [illegible] preferential origin.

Hunnebeck Gerüstbaud GmbH
Postfach [illegible] 64285 Darmstadt
Address of Goods Darmstadt
Phone [illegible]
Fax [illegible]
Registry Court [illegible]
Bank details
Commerzbank [illegible]

Our material is supplied under the present General Conditions of Contract, Sales and Leasing.

GEORGIOS KARSANIAS
PRESIDENT

03/12/18

Ziegenscheln KAUFAUFTRAG

KÜNNEBECKE

Auftragsnummer

Kundennummer

Rechnungsanschrift

Lieferanschrift

Kundenwunsch

ID-Nummer 2243147

Stand Vater Block

Block 7

Kunde vorgesehen am

Kundenwunsch

Kundenwunsch durch

Von Lager

Ab Lager

Spediteur

Der Ansprechpartner

Lieferbedingung

Ihre Bestellnummer

Ihre Ust-Id-Nr

Mitarbeiter

| Pos | Menge | ME | KEN Bezeichnung | | |

Sales Invoice

Invoice No.	50260092
Date	29.02.2016
Order Type	DE HDE Sale Order
Order Number	21139931
Customer No.	1016209

---sin reply refer to

HÜNNEBECK
A BRAND COMPANY

GEORGIOS KARKADAS
PRESIDENT

Hünnebeck Deutschland GmbH
Postfach 104451, 40855 Ratingen
Fidija

Stara Varos, Blok:
ME 81000 Podgorica

Delivery Address

Fidija
Stara Varos
Blok 7

81000 Podgorica-ME

Accounting Month	
Ex warehouse	V00 HBK DE HOG Ratingen SALE
To warehouse	
Representative	Montenegro
Your Contact	Repenning, Cathrin
Phone	(02102) 937-33[illegible]
Delivery Conditions	CPT PODGORICA-
Your order number	by mail 22.02.2016
Your VAT reg. no.	

	Total EUR
Sum of articles according to list	2.659,76
Total	2.659,76
Tax 0.00%	0.00
Invoice Amount	2.659,76

Payment: Up to 29.02.2016 without deduction.

Invoice amount	Cash discount amount	Net amount	Due date	weight KG
2.659,76 EUR			29.02.2016	633,372

Hünnebeck Deutschland GmbH
Postfach 104451, 40855 Ratingen
Rehhecke 80, 40885 Ratingen
Phone: + 49 2102 [illegible]
Fax: + 49 2102 [illegible]
Registry Court: Düsseldorf HRB 44118, Registered Office: Ratingen
Bank details:
Commerzbank Düsseldorf, Bank Code 300 400 00, Acc. No 18 63 318 00, BIC COBADEFFXXX, IBAN DE54 3004 0000 0186 3318 00

Manager: Martin Hemberger
VAT-ID-NO.: DE812774742,
Tax-no.: 147/5831/1170

Our material is supplied under the present General Conditions of Contract, Sales and Leasing.

UPRAVA CARINA
Ministry of Finance
Podgorica
Cina Uprava
Jaspro
Podgorica

ЗАПОКОВИЛ
207

9910 325
09.03.16

03/12/18

Sales Invoice

Invoice No.	50250092
Date	29.02.2016
Order Type	DB HDR Sale Order
Order Number	21139931
Customer No.	1016209

---in reply refer to

HONNEBECK

Item Number	Description	S U	From NR	Qty	Position-weight	Unit Price EUR	Total Value EUR
DN: 161566271 dated 29.02.16, loaded on 29.02.16 ex stockyard EBK DE HDE Laatzen HIRE							
1002 RASTO/TAKKO-FORMWORK							
536051	RASTO-Hinged Corner 30/270	U	X30	6	430,398	284,33	1.705,97
	Customs Tariff No. 73084000/Country of Origin HU						
563563	TAKKO-Hinged Corner 30/120	U	X30	6	202,974	158,97	953,79
	Customs Tariff No 73084000/Country of Origin HU						
						Total 1002 RASTO/TAKKO-FORMWORK	2.659,76
						Total (net)	2.659,76

Payment:
100 % cash in advance.

The Exporter of the products covered by this document (customs authorization No DE/2600/EA/0002, declares that, except where otherwise clearly indicated, these products are of EEC preferential origin

The date of supply of goods or services is in line with the invoice date unless otherwise shown. Unless otherwise expressly agreed, the purchase price and all related costs are due for payment 30 days after date of invoice. Our user manuals can be downloaded free of charge from our website www.huennebeck.com.
Tax exempt supply of goods outside the European Union

Hünnebeck Deutschland GmbH
Postfach 104461 40835 Ratingen
Rehhecke 50, 40885 Ratingen
Phone: +49 2102 937-1
Fax: +49 2102 37651
Registry Court: Düsseldorf HRB 44118, Registered Office: Ratingen
Bank Details:
Commerzbank Düsseldorf, Bank Code 300 400 00, Acc. No. 18 63 315 00, BIC COBADEFFXXX, IBAN DE54 3004 3002 0186 3315 00

Manager: Martin Hennebeck
VAT-ID-NO.: DE812774747
Tax-no.: 147/5931/1170

For material is supplied under the present General Conditions of Contract, Sales and Delivery.

03/12/18

Sales Invoice

Invoice No.	50261389
Date	01.03.2016
Order Type	DE HDE Sale Order
Order Number	21139531
Customer No.	1016209

---> in reply refer to

HÜNNEBECK
A BRAND CONTRACT

GEORGIOS KARKANIAS
PRESIDENT

Page 1 of 1

Hünnebeck Deutschland GmbH
Postfach 104461, 40885 Ratingen
Fidija

Stara Varos, Blok:
ME 81000 Podgorica

Delivery Address

Fidija
Stara Varos
Blok 7

81000 Podgorica-ME

Accounting Month	
Ex warehouse	VOC HBK DE HGG Ratingen SALE
To warehouse	
Representative	Montenegro
Your Contact	Repenning, Cathrin
Phone	(02102) 937-311
Delivery Conditions	CPT PODGORICA-
Your order number	by mail 22.02.2016
Your VAT reg. no.	

	Total EUR
Sum of articles according to list	9.318,20
Total	9.318,20
Tax 2.00%	0,00
Invoice Amount	5.318,20

Payment: Up to 01.03.2016 without deduction.

Invoice amount	Cash discount amount	Net amount	Due date	weight KG
9.318,20 EUR			01.03.2016	2.106,481

929 325
09.03.16

Hünnebeck Deutschland GmbH
Postfach 104461 40885 Ratingen
Hünnebeck 80, 40885 Ratingen
Phone + 49 2102 937-1
Fax + 49 2102 37651
Registry Court: Düsseldorf SRB 44118, Registered Office: Ratingen
Bank details:
Commerzbank Düsseldorf, Bank Code 300 400 00, Acc. No. 78 43 315 00, BIC COBADEFFXXX, IBAN DE54 3004 0000

Manager: Martin Hemberger
VAT-ID-NO.: DE811774741
Tax-no.: 147/5811/1170

Our material is supplied under the current General Conditions of Contract, Sales and Leasing

03/12/18

Sales Invoice

Invoice No.	90261389
Date	01.03.2016
Order Type	DE HDE Sale Order
Order Number	91139931
Customer No.	1016222

...ase reply refer to

HÜNNEBECK

Page 1 of 1

Item Number	Description	N O	From WH	Qty	Position-weight	Unit Price EUR	Total Value EUR
DN: 191567164 dated 01.03.16, loaded on 01.03.16 ex stockyard HSK DE HGG Ratingen SA52							
1002	RASTO/TAKKO-FORMWORK						
	M-ADJUSTABLE ALIGNING CLAMP	N	V00	50	254,000	51,54	
	Customs Tariff No. 83024190/Country of Origin PT						
	TAKKO-MX-Panel 70 x 120	N	V00	3	160,635	107,07	
	Customs Tariff No. 76084200/Country of Origin HU						
	TAKKO-Panel 50 x 120	N	V00	4	214,072	88,00	
	Customs Tariff No. 76084900/Country of Origin PL						
	TAKKO-Upper Corner 90/120	N	V00	31	646,674	134,79	
	Customs Tariff No. 76084200/Country of Origin RU						
	RASTO OUTER CORNER CLAMP X	N	V00	100	319,000	28,00	
	Customs Tariff No. 76082005/Country of Origin PT						
	X-ALIGNING PANEL CLAMP M	N	V00	100	892,000	15,34	
	Customs Tariff No. 83024190/Country of Origin PT						
					Total 1002 RASTO/TAKKO-FORMWORK		
					Total (net)		

... Advance.

... Position of the products covered by this document (customs authorisation No. ...) ... indications, these products are of EEC preferential origin.

... of goods or services as in line with the invoice date unless otherwise shown. Under otherwise ... apply.

...beck Deutschland GmbH
... Ratingen
... Geschäftsführer: Martin Hünnebeck
... VAT-ID-NO. DE811276741
... Tax-No. 147/5831/1175

... Ratingen, Amtsgericht Essen, Handelsregister Abteilung B, Ratingen

... Bank (BLZ 430 601 ..., Acc. No. ...

... Ratingen

... Order ...
... Date ...

03/12/16

03/12/19

Sales Invoice

Invoice No.	50261407
Date	01.03.2016
Order Type	DE HDE Sale Order
Order Number	21139933
Customer No.	1016209

---> in reply refer to

HÜNNEBECK
A BRAND COMPANY

GEORGIOS MARKANTAS
PRESIDENT

Hünnebeck Deutschland GmbH
Postfach 104461, 40855 Ratingen
Fidija

Stara Varos, Blok:
ME 81000 Podgorica

Delivery Address

Fidija
Stara Varos
Blok 7

81000 Podgorica-ME

Accounting Month	
Ex warehouse	[illegible] Ratingen SALE
To warehouse	
Representative	[illegible]
Your Contact	[illegible]
Phone	[illegible]
Delivery Conditions	CPT PODGORICA
Your order number	[illegible]
Your VAT reg. no.	

	Total EUR
Sum of articles according to list	17.138,51
Total	17.138,51
Tax 0.00%	0.00
Invoice Amount	17.138,51

Payment: Up to 01.03.2016 without deduction.

Invoice amount	Cash discount amount	Net amount	Due date	weight KG
17.138,51 EUR			01.03.2016	5.689,297

OLAUA
Ulaz 392 Prilaz 325
09.03.16

Our material is supplied under the present General Conditions of Contract, Sales and Leasing.

Hünnebeck Deutschland GmbH
Postfach 104461 40855 Ratingen
Rehbecke 60, 40885 Ratingen
Phone: + 49 2102 937-1
Fax: + 49 2102 37651
Registry Court: Düsseldorf HRB 44118, Registered Office: Ratingen
Bank Details:
Commerzbank Düsseldorf, Bank Code 300 400 00, Acc. No. 18 03 315 00, BIC COBADEFFXXX, IBAN DE54 3004 0000 0186 3315 00

Manager: Martin Hemberger
VAT-ID-NO.: DE812774741,
Tax-no.: 147/5831/1170

Sales Invoice

Invoice No. 5025[illegible]
Date 01.03.2016
Order Type DE HDE Sale Order
Order Number [illegible]
Customer No. [illegible]

<---in reply refer to

HONNEBEC

Page 8

Item Number	Description	N U	From WH	Qty	Position-weight	Unit Price EUR		Total Va EUR
DN: 161567425 dated 01.03.16, loaded on 01.03.16 ex stockyard HBK DE HDE Darmstadt HIRZ								
0220 EUROPLUS PROPS								
552147	STEEL PROP EUROPLUS 350 DB/DI	U	X24	150	1200.250	33.17		4.97
	Customs Tariff No. 73084900/Country of Origin PL							
	Total 0220 EUROPLUS PROPS							4.97
1002 RASTO/TAKKO-FORMWORK								
[illegible]	TAKKO-Panel [illegible]	[illegible]	X24	20	960,480	136,04		[illegible]
	Customs Tariff No. 73084900/Country of Origin [illegible]							
[illegible]	TAKKO-Panel [illegible]	S	X24	10	481,200	107,27		[illegible]
	Customs Tariff No. 73084900/Country of Origin [illegible]							
	Total 1002 RASTO/TAKKO-FORMWORK							[illegible]
1076 TOPEC-FORMWORK								
[illegible]	TOPEC [illegible]	U	X24	[illegible]	901,365	344,21		[illegible]
	Customs Tariff No. 73089090/Country of Origin DE							
[illegible]	TOPEC BEAM [illegible]	U	X24	1,50	362,000	18,52		[illegible]
	Customs Tariff No. 73089090/Country of Origin DE							
	Total 1076 TOPEC-FORMWORK							[illegible]
9096 TRANSPORT AND STORAGE								
558480	EURO [illegible] Box	U	X24	1	71,581	150,78		[illegible]
	Customs Tariff No. 73269098/Country of Origin PT							
552589	EURO [illegible] Frame 120/60	U	X24	4	217,880	121,49		[illegible]
	Customs Tariff No. 73269098/Country of Origin PL							
	Total 9096 TRANSPORT AND STORAGE							[illegible]
DN: 161567422 dated 01.03.16, loaded on 01.03.16 ex stockyard HBK DE HDE Darmstadt HIRZ								
9096 TRANSPORT AND STORAGE								

Delivery and payment terms according to General Conditions of Contract, No [illegible]

Commerzbank Deutschland (BLZ)
Postbank [illegible] (BLZ) Postbank
Postscheck NL [illegible] Rotterdam
Phone + 49 2102 [illegible]
Fax + 49 2102 [illegible]
Registry Court: Mönchengladbach HRB [illegible], Registered Office: Rutinger
Bank details:
Commerzbank Mönchengladbach, IBAN DE[illegible], BIC COBADEFFXXX, Deutsche Bank MGH [illegible]
Manager: Martin Honnebec
VAT-ID-NR: DE[illegible]
Tax-No.: 102/5833/1170

03/12/18

Sales Invoice

Invoice No.	90261407
Date	01.03.2016
Order Type	DE HDE Sale Order
Order Number	21139921
Customer No.	1016269

---ain reply refer to

HUNNEBECK

GEORGIOS KARAMIAS
RESIDENT

Item Number	Description	N U	From WH	Qty	Position-weight	Unit Price EUR		Total Value EUR
5458480	EURO Lattice Box Customs Tariff No. 73269040/Country of Origin PT	U	X24	1	71,551	150,78		150,78
						Total 9096 TRANSPORT AND STORAGE		150,78
						Total (net)		17.138,51

Payment:
100 % cash in advance

The Exporter of the products covered by this document (customs authorisation No. DE/2600/EA/00021 declares that, except where otherwise clearly indicated, these products are of EEC preferential origin.

The date of supply of goods or services is in line with the invoice date unless otherwise shown. Unless otherwise expressly agreed, the purchase price and all related costs are due for payment 30 days after date of invoice. Our user manuals can be downloaded free of charge from our website www.huennebeck.com.
Tax exempt supply of goods outside the European Union

HUNNEBECK
A BRAND COMPANY

Our material is supplied under the General Conditions of Contract, Leasing).

Hünnebeck Deutschland GmbH
Postfach 104461 40855 Ratingen
Rethelstr. 80; 40885 Ratingen
Phone: + 49 2102 937-1
Fax: + 49 2102 37651
Registry Court: Düsseldorf HRB 44116, Registered Office: Ratingen
Bank details:
Commerzbank Düsseldorf, Bank Code 300 400 00, Acc. No. 12 62 315 00, BIC COBADEFFXXX, IBAN DE54 3004 0000 0166 1211 00

Manager: Martin Nemberger
VAT-ID-NO.: DE812774741
Tax-no.: 147/5831/1178

03/12/18

iv) CONTRACTOR'S PERSONNEL

Proposed Personnel

Tenderers should provide the names of suitably qualified personnel to meet the specified requirements for each of the positions listed in Tender Data. The data on their experience should be supplied using the Form below for each candidate.

1.	CONTRACTOR'S REPRESENTATIVE
	KARKANIA STAMATIA
2.	CONTRACTOR'S REPRESENTATIVE ALTERNATE
	KARANIKA ATHINA
3.	SITE MANAGER
	KARANIKA ATHINA
4.	SITE MANAGER ALTERNATE
	GLEZOS FLORIOS
5.	LAND SURVEYOR
	IAKOVAKIS KONSTANTINOS
6.	LAND SURVEYOR ALTERNATE
	VALARIS DIMITRIOS
7.	CONSTRUCTION ENGINEER
	POUTSIAKAS APOSTOLOS
8.	CONSTRUCTION ENGINEER ALTERNATE
	MARGARITIS VASILEIOS
9.	ELECTRICAL ENGINEER
	KOSTAS-MPEZEVEGKIS BASILEIOS
10.	ELECTRICAL ENGINEER ALTERNATE
	GKAZGKANIS DIMITRIOS
11.	DESIGNER OF WWTP/WATER SUPPLY/FS
	ARGYROULI FOTEINI
12.	DESIGNER OF WWTP/WATER SUPPLY/FS ALTERNATE
	ALEXIOU STAVROULA
13.	PROCESS DESIGNER OF WWTP
	ALEXIOU STAVROULA
14.	PROCESS DESIGNER OF WWTP ALTERNATE
	ARGYROULI FOTEINI

03/12/18

DANILOVGRAD MUNICIPAL INFRASTRUCTURE
CONSTRUCTION OF WASTEWATER PLANT

KARKANIAS
ENVIRONMENTAL TECHNOLOGY S.A

Resume of Proposed Personnel

The Tenderer shall provide all the information requested below for each of the personnel listed the schedule of the Contractor's Personnel. Fields with asterix (*) shall be used for evaluation.

In case of a JVCA the form shall be submitted for each partner of the JVCA.

Position* **CONTRACTOR'S REPRESENTATIVE**		
Personnel information	Name * **KARKANIA STAMATIA**	Date of birth **01.05.1954**
	Professional qualifications **MINISTRY OF HIGHER TECHNOLOGICAL AND VOCATIONAL EDUCATION (KATEE) OF LARISSA** **DEPARTMENT OF MECHANICAL ENGINEERING** **GRADUATED MECHANICAL ENGINEER**	
Present employment	Name of Employer **KARKANIAS ENVIROMENTAL TECHNOLOGY S.A**	
	Address of Employer **INDUSTRIAL AREA OF LARISA, POSTAL CODE 41004, BOX 3053 GREECE**	
	Telephone **+30 2410 541386**	Contact (manager / personnel officer) **VASILIKI KARKANIA CEO**
	Fax **+30 2410 541354**	E-mail **info@karkanias.gr**
	Job title **MECHANICAL ENGINEER, MEMBER OF THE BOARD AND LEGAL REPRESENTATIVE**	Years with present *Employer* ***23***

Summarize professional experience in reverse chronological order. Indicate particular technical and managerial experience relevant to the project.

From*	To*	Company, Project , Position, and Relevant Technical and Management Experience*
TODAY	2008	EMPLOYER: KARKANIAS - ENVIRONMENTAL TECHNOLOGY S.A. POSITION: GENERAL SUPERVISOR OF ALL THE MECHANICAL ENGINEERS OF THE PROJECTS OF THE COMPANY
2007	2006	LOCATION: MUNICIPALITY OF FILIPPIADA, GREECE EMPLOYER: KARKANIAS - ENVIRONMENTAL TECHNOLOGY S.A. POSITION: SITE STUFF PROJECT: WASTE WATER TREATMENT PLANT OF THE FILIPPIADA MUNICIPALITY, GREECE
2006	2005	LOCATION: LAMIA, GREECE EMPLOYER: KARKANIAS - ENVIRONMENTAL TECHNOLOGY S.A. POSITION: SITE STUFF PROJECT: IMPROVEMENT OF WASTE WATER TREATMENT PLANT OF LAMIA (66.700 PE), GREECE
2005	2005	LOCATION; SKIATHOS ISLAND EMPLOYER: KARKANIAS - ENVIRONMENTAL TECHNOLOGY S.A. POSITION: SITE STUFF PROJECT: CONSTRUCTION OF THE WWTP OF KOUKOUNARIES (SKIATHOS ISLAND)/GREECE

03/12/18

2002	2001	LOCATION: ALMYROS, GREECE EMPLOYER: KARKANIAS - ENVIRONMENTAL TECHNOLOGY S.A. POSITION: SITE STUFF PROJECT: WWTP ALMYROS MUNICIPALITY AND ITS SURROUNDING AREA (18.000PE)/GREECE
2001	2000	LOCATION:POLYKASTRO, GREECE EMPLOYER: KARKANIAS - ENVIRONMENTAL TECHNOLOGY S.A. POSITION: SITE STUFF PROJECT: WASTE WATER TREATMENT PLANT OF THE MUNICIPALITIES OF POLYKASTRO AND AXIOUPOLI (12.800 PE), GREECE
2000	1998	LOCATION: LEPTOKARIA, GREECE EMPLOYER: KARKANIAS - ENVIRONMENTAL TECHNOLOGY S.A. POSITION: SITE STUFF PROJECT: WASTE WATER TREATMENT PLANT OF THE REGION OF SOUTH PIERIA (150.000 PE), GREECE

03/12/18

Position* **CONTRACTOR'S REPRESENTATIVE ALTERNATE**		
Personnel information	Name * **KARANIKA ATHINA**	Date of birth **21.11.1971**
	Professional qualifications **ARISTOTLE UNIVERSITY OF THESSALONIKI** **FACULTY OF ENGINEERING** **CIVIL ENGINEER MSc**	
Present employment	Name of Employer **KARKANIAS ENVIROMENTAL TECHNOLOGY S.A**	
	Address of Employer **INDUSTRIAL AREA OF LARISA, POSTAL CODE 41004, BOX 3053 GREECE**	
	Telephone **+30 2410 541386**	Contact (manager / personnel officer) **VASILIKI KARKANIA CEO**
	Fax **+30 2410 541354**	E-mail **info@karkanias.gr**
	Job title **Member of Executives of the company for the construction of Public and Private Projects of the company**	Years with present *Employer* ***15***

Summarize professional experience in reverse chronological order. Indicate particular technical and managerial experience relevant to the project.

From*	To*	Company, Project , Position, and Relevant Technical and Management Experience*
2017	2015	LOCATION: PODGORICA,MONTENEGRO EMPLOYER: KARKANIAS - ENVIRONMENTAL TECHNOLOGY S.A. POSITION: PROJECT MANAGER PROJECT: DESING AND BUILD OF LEACHATE TREATMENT PLANT AT "LIVADE" LANDFILL IN PODGORICA MONTENEGRO
2015	2014	LOCATION:LEIANOKLADI, GREECE EMPLOYER: KARKANIAS - ENVIRONMENTAL TECHNOLOGY S.A. POSITION: PROJECT MANAGER-SITE MANAGER PROJECT: WASTE WATER TREATMENT PLANT OF LEIANOKLADI AND YPATI,(10.000 PE),GREECE
2009	2007	LOCATION: AGIA, GREECE EMPLOYER: KARKANIAS - ENVIRONMENTAL TECHNOLOGY S.A. POSITION: PROJECT MANAGER-SITE MANAGER PROJECT:WASTE WATER TREATMENT PLANT OF AGIA (12.000 PE), GREECE
2007	2005	LOCATION: LAMIA, GREECE EMPLOYER: KARKANIAS - ENVIRONMENTAL TECHNOLOGY S.A. POSITION: SITE MANAGER, PROJECT: IMPROVEMENT OF WASTE WATER TREATMENT PLANT OF LAMIA (66.700 PE), GREECE
2005	2001	LOCATION: ALMYROS, GREECE EMPLOYER: KARKANIAS - ENVIRONMENTAL TECHNOLOGY S.A. POSITION: PROJECT MANAGER –SITE MANAGER PROJECT: WWTP ALMYROS MUNICIPALITY AND ITS SURROUNDING AREA (18.000PE)/GREECE

03/12/18

2000	2000	LOCATION:POLYKASTRO, GREECE EMPLOYER: KARKANIAS - ENVIRONMENTAL TECHNOLOGY S.A. POSITION: SITE STUFF PROJECT: WASTE WATER TREATMENT PLANT OF THE MUNICIPALITIES OF POLYKASTRO AND AXIOUPOLI (12.800 PE), GREECE
2000	1998	LOCATION: LEPTOKARIA, GREECE EMPLOYER: KARKANIAS - ENVIRONMENTAL TECHNOLOGY S.A. POSITION: SITE STUFF PROJECT: WASTE WATER TREATMENT PLANT OF THE REGION OF SOUTH PIERIA (150.000 PE), GREECE

03/12/18

Position* **SITE MANAGER**		
Personnel information	Name * **KARANIKA ATHINA**	Date of birth **21.11.1971**
	Professional qualifications **ARISTOTLE UNIVERSITY OF THESSALONIKI** **FACULTY OF ENGINEERING** **CIVIL ENGINEER MSc**	
Present employment	Name of Employer **KARKANIAS ENVIROMENTAL TECHNOLOGY S.A**	
	Address of Employer **INDUSTRIAL AREA OF LARISA, POSTAL CODE 41004, BOX 3053 GREECE**	
	Telephone **+30 2410 541386**	Contact (manager / personnel officer) **VASILIKI KARKANIA CEO**
	Fax **+30 2410 541354**	E-mail **info@karkanias.gr**
	Job title **Member of Executives of the company for the construction of Public and Private Projects of the company**	Years with present *Employer* ***15***

Summarize professional experience in reverse chronological order. Indicate particular technical and managerial experience relevant to the project.

From*	To*	Company, Project , Position, and Relevant Technical and Management Experience*
2017	2015	LOCATION: PODGORICA,MONTENEGRO EMPLOYER: KARKANIAS - ENVIRONMENTAL TECHNOLOGY S.A. POSITION: PROJECT MANAGER PROJECT: DESING AND BUILD OF LEACHATE TREATMENT PLANT AT "LIVADE" LANDFILL IN PODGORICA MONTENEGRO
2015	2014	LOCATION:LEIANOKLADI, GREECE EMPLOYER: KARKANIAS - ENVIRONMENTAL TECHNOLOGY S.A. POSITION: PROJECT MANAGER-SITE MANAGER PROJECT: WASTE WATER TREATMENT PLANT OF LEIANOKLADI AND YPATI,(10.000 PE),GREECE
2009	2007	LOCATION: AGIA, GREECE EMPLOYER: KARKANIAS - ENVIRONMENTAL TECHNOLOGY S.A. POSITION: PROJECT MANAGER-SITE MANAGER PROJECT:WASTE WATER TREATMENT PLANT OF AGIA (12.000 PE), GREECE
2007	2005	LOCATION: LAMIA, GREECE EMPLOYER: KARKANIAS - ENVIRONMENTAL TECHNOLOGY S.A. POSITION: SITE MANAGER, PROJECT: IMPROVEMENT OF WASTE WATER TREATMENT PLANT OF LAMIA (66.700 PE), GREECE
2005	2001	LOCATION: ALMYROS, GREECE EMPLOYER: KARKANIAS - ENVIRONMENTAL TECHNOLOGY S.A. POSITION: PROJECT MANAGER –SITE MANAGER PROJECT: WWTP ALMYROS MUNICIPALITY AND ITS SURROUNDING AREA (18.000PE)/GREECE
2000	2000	LOCATION:POLYKASTRO, GREECE EMPLOYER: KARKANIAS - ENVIRONMENTAL TECHNOLOGY S.A. POSITION: SITE STUFF PROJECT: WASTE WATER TREATMENT PLANT OF THE MUNICIPALITIES OF POLYKASTRO AND AXIOUPOLI (12.800 PE), GREECE

03/12/18

DANILOVGRAD MUNICIPAL INFRASTRUCTURE
CONSTRUCTION OF WASTEWATER PLANT

KARKANIAS

2000	1998	LOCATION: LEPTOKARIA, GREECE EMPLOYER: KARKANIAS - ENVIRONMENTAL TECHNOLOGY S.A. POSITION: SITE STUFF PROJECT: WASTE WATER TREATMENT PLANT OF THE REGION OF SOUTH PIERIA (150.000 PE), GREECE

03/12/18

Position* **SITE MANAGER ALTERNATE**		
Personnel information	Name * **GLEZOS FLORIOS**	Date of birth **26.01.1957**
	Professional qualifications **NATIONAL TECHNICAL UNIVERSITY OF ATHENS** **CIVIL ENGINEER**	
Present employment	Name of Employer **KARKANIAS ENVIROMENTAL TECHNOLOGY S.A**	
	Address of Employer **INDUSTRIAL AREA OF LARISA, POSTAL CODE 41004, BOX 3053 GREECE**	
	Telephone **+30 2410 541386**	Contact (manager / personnel officer) **VASILIKI KARKANIA CEO**
	Fax **+30 2410 541354**	E-mail **info@karkanias.gr**
	Job title **Member of Executives of the company for the construction of Public and Private Projects of the company**	Years with present *Employer* ***6***

Summarize professional experience in reverse chronological order. Indicate particular technical and managerial experience relevant to the project.

From*	To*	Company, Project , Position, and Relevant Technical and Management Experience*
2017	2011	EMPLOYER: KARKANIAS - ENVIRONMENTAL TECHNOLOGY S.A. POSITION: GENERAL SUPERVISOR OF ALL THE CIVIL ENGINEERS OF THE PROJECTS OF THE COMPANY
2011	2011	Commercial warehouse including offices in Rykia, Aspropyrgos (2011)
2009	2003	Primary School & Nursery on Anthousa, Attiki (2003-2009)
2008	2003	Expansion and Modernization of the Archaeological Museum of Ioannina (MINISTRY OF CULTURE 2003-2008)
2008	2004	Construction of a six-storey building with three basements for the Criminal Investigations Department of the Greek Police Headquarters CGC (Estate State company) (2004-2008)
2008	2002	Extension of Metro Line 3 Ethini Amyna – Stavros, Attiki - Civil Works (CON 02/007) (2002-2008)
2007	2003	Foundation Board of the New Acropolis Museum (2003-2007)
2007	200	Extension of the 6th Deck on Thessaloniki's Port Phase AI - Part A (ThPA 2000-2007)
2005	1999	Construction of a protected building, center of air operations CARS (YPEPA 1999-2005)
2005	2001	Configuration open spaces of the Olympic Village and other complementary works - Section B (OX AE 2001-2005)
2005	2001	Construction of the Olympic Village and post-Olympic adaptation - Section B '600 homes and infrastructure (OX AE 2001-2005)
2005	2004	New terminal building and landscaping of Kalymnos airport (2004-2005)
2005	2003	VILLAGE TYPE 2004 – Maroussi, Attiki - Residential Construction of Sector C03, Buildings C04, C05, D01, D02, D03 & D04 (2003-2005)
2005	2005	Maintenance of the existing railway track Pyrgos - Kyparissia (OSE SA 2005)

03/12/18

2004	2001	Aesthetic Integration of Olympic Sports Center of Athens (OAKA): Special Construction (EYDE / AOEE 2001-2004)
2004	2002	Operation - Maintenance of Sewage Treatment Plant Aggelochori (2002-2004)
2004	2002	Additional works construction for the Section Line Infrastructure Ano Liosia-Thriasio (PM 159) (OSE SA PROJECTS 2002-2004)
2003	1999	New cargo terminal of Olympic Airways at Spata "CARGO" (EM N A / OA 1999-2003)
2003	1999	New elevated supply unit in the new Athens International Airport Eleftherios Venizelos (OLYMPIC CATERING SA 1999-2003)
2002	1996	Building on the corner of Chandri 1 and Thessaloniki Str. in Mosxato, Attiki for housing KEPYO (1996-2002)
2002	1996	Wastewater Treatment Plant Municipality of Patras (DEYAP 1996-2002)
2001	2000	Subsea Pipeline Distribution Treated Wastewater WWTP of Patra and Associated Works (DEYAP 2000-2001)
1998	1998	Design - Construction regarding damage restoration in load-bearing structure of the road deck above the temple M. King John the Baptist (Aimos Thessaloniki) (1998)
1997	1995	Construction and electrical / mechanical restoration and conversion of the Vafia Archaeological Museum in Kimolos (Ministry of Culture, 1995-1997)
1997	1995	Wastewater Treatment Plant City of Agrinio (DEYA 1995-1997)
1997	1997	Road Construction of Kallisti Palladium (1997)
1997	1997	Landslide restoration upstream Ardameriou Community's football stadium (Community Ardameriou) (1997)
1996		Multi-storey office building on the corner of the Avenues Syggrou, Tagmatarxou Plessa - demolition work, excavation and shoring (TENSOR) (1996)
1995	1995	Marking of Athens (Municipality of Athens 1995)
1995	1993	Construction of fishing shelter on K. Pyrgos (Retail Price HERAKLION 1993-1995)
1994	1992	Organic Cleaning, Association Communities Filoti Chalkeia Damargiona (Cyclades Prefecture 1992-1994)
1994	1992	Reservoir Havgas Lassithi Plateau (Ministry of Agriculture 1992-1994)
1993	1993	Building Construction T / K B FANEROMENIS (OTE 1993)
1993	1989	Out of the river Reservoir Theopoiitou, Samos (Ministry of Agriculture 1989-1993)
1992	1992	Pilot trial of WWTP ODAZ (Municipality of Zakynthos 1992)
1992	1992	Configuration of Shooting Center, Kaisariani (Athens Prefecture 1992)
1992	1992	Construction of Kranidi firewall (Argolida Prefecture 1992)
1992	1992	Repair and maintenance of the Prefecture building in Cyclades(Prefecture of Cyclades 1992)
1990	1989	Construction of A / D Eggaron Center, Naxos (OTE 1989-1990)
1989	1989	Configuration of Cathedral Square (Municipality of Naxos 1989)
1988	1988	Construction of heliports in Mykonos (736 DSE 1988)
1987	1987	Sewage, Potamia (Cyclades Prefecture 1987)
1986	1986	Water Supply, Coronis (Cyclades Prefecture 1986)
1986	1986	Road Opening Ekso Xorio (District Cyclades 1986)
1985	1983	Water Supply - Sewage of the village Aperathou, Naxos (Cyclades Prefecture 1983-1985)
1992	1992	Construction of Kranidi firewall (Argolida Prefecture 1992)

03/12/18

1992	1992	Repair and maintenance of the Prefecture building in Cyclades(Prefecture of Cyclades 1992)
1990	1989	Construction of A / D Eggaron Center, Naxos (OTE 1989-1990)
1989	1989	Configuration of Cathedral Square (Municipality of Naxos 1989)
1988	1988	Construction of heliports in Mykonos (736 DSE 1988)
1987	1987	Sewage, Potamia (Cyclades Prefecture 1987)
1986	1986	Water Supply, Coronis (Cyclades Prefecture 1986)
1986	1986	Road Opening Ekso Xorio (District Cyclades 1986)
1985	1983	Water Supply - Sewage of the village Aperathou, Naxos (Cyclades Prefecture 1983-1985)

03/12/18

Position* **LAND SURVEYOR**		
Personnel information	Name * **IAKOVAKIS KONSTANTINOS**	Date of birth **29.06.1965**
	Professional qualifications **ARISTOTLE UNIVERSITY OF THESSALONIKI** **FACULTY OF ENGINEERING** **RURAL AND SURVEYOR ENGINEER**	
Present employment	Name of Employer **Free lancer**	
	Address of Employer **NIKITARA 35, LARISSA**	
	Telephone **+30 2410 239002**	Contact (manager / personnel officer) **IAKOVAKIS KONSTANTINOS**
	Fax **+30 2410 239002**	E-mail **iakovakis.elem@gmail.com**
	Job title **RURAL AND SURVEYOR ENGINEER**	Years with present *Employer* **25**

Summarize professional experience in reverse chronological order. Indicate particular technical and managerial experience relevant to the project.

From*	To*	Company, Project , Position, and Relevant Technical and Management Experience*
TODAY	1999	Public and Private Projects (Surveying and Hydraulic Projects)
2017	2017	EMPLOYER: KARKANIAS - ENVIRONMENTAL TECHNOLOGY S.A. PROJECT: "STUDY – CONSTAUCTION FOR THE UPGRADE-EXTENSION OF THE WASTE WATER CLEANING PLANT IN AR. OF LARISSA POSITION: LAND SURVEYOR ENGINEER
2016	2015	EMPLOYER: KARKANIAS - ENVIRONMENTAL TECHNOLOGY S.A. PROJECT: Landfill extension of the urban area of Volos POSITION: LAND SURVEYOR ENGINEER
2015	2014	EMPLOYER: KARKANIAS - ENVIRONMENTAL TECHNOLOGY S.A. PROJECT: Rehabilitation of the Landfill of the Kilkis Municipality POSITION: LAND SURVEYOR ENGINEER
2014	2012	MUNICIPALITY OF KILELER, GREECE PROJECT: DETERMINATION-CERTIFICATION WORKS POSITION: LAND SURVEYOR ENGINEER
2012	2012	MUNICIPALITY OF MELIVIA PROJECT: WORKS FOR THE MUNICIPALITY(PREVENTION FROM FLOOD)
2011	2008	EMPLOYER: KTIMA.GP PROJECT: STUDY OF GEOGRAPHICAL INFORMATION SYSTEMS (G.I.S.) FOR THE MUNICIPALITIES OF LAMIA,KARDITSA,LARISSA,VOLOU
2005	2005	MUNICIPALITY OF SAMOTHRAKI, GREECE PROJECT: EFFLUENT PIPELINE OF WWTP OF SAMOTHRAKI POSITION:LAND SURVEYOR –HYDRAULIC ENGINEER
2003	2002	MUNICIPALITY OF AGIA, LARISSA, GREECE PROJECT:WWTP POSITION:DESIGNER LAND SURVEYOR–HYDRAULIC ENGINEER
2002	2002	MUNICIPALITY OF MPALOS, CRETE, GREECE PROJECT:WWTP OF MPALOS, SEWAGE NETWORK POSITION:DESIGNER LAND SURVEYOR –HYDRAULIC ENGINEER
1999	1995	Ministry of the Environment, Physical Planning and Public Works - Region of Thessaly Position: Surveying Engineer Responsibilities: Supervisor in projects and studies of road and hydraulic works

03/12/18

1994	1993	Ministry of Culture Position: Surveying Engineer Responsibilities: Impression of the monasteries of Meteora and other Byzantine and modern monuments.
1994	1993	Ministry of Agriculture Position: Surveying Engineer Responsibilities - Responsibilities: Responsible Survey Engineer in reforestations of the Prefecture of Larissa

03/12/18

Position* **LAND SURVEYOR ALTERNATE**		
Personnel information	Name * **VALARIS DIMITRIOS**	Date of birth **04.04.1964**
	Professional qualifications **ARISTOTLE UNIVERSITY OF THESSALONIKI** **FACULTY OF ENGINEERING** **RURAL AND SURVEYOR ENGINEER**	
Present employment	Name of Employer **Free lancer**	
	Address of Employer **DIOGENOUS 4, LARISSA**	
	Telephone **+30 2410 257457**	Contact (manager / personnel officer) **VALARIS DIMITRIOS**
	Fax **+30 2410 257461**	E-mail **dxvalarism@gmail.com**
	Job title **RURAL AND SURVEYOR ENGINEER**	Years with present *Employer* **24**

Summarize professional experience in reverse chronological order. Indicate particular technical and managerial experience relevant to the project.

From*	To*	Company, Project , Position, and Relevant Technical and Management Experience*
TODAY	1993	Public and Private Projects (Surveying, Hydraulic, road Projects)
TODAY	2017	EMPLOYER: UNITED ASSOCIATION OF MANAGEMENT OF SOLID WASTE OF REGION OF LARISSA PROJECT: OPERATION OF LANDFILL OF LARISSA POSITION: LAND SURVEYOR ENGINEER (MEASUREMENTS OF VOLUMES OF SOLID WASTE, SEDIMENTATIONS ETC)
2016	2016	EMPLOYER: MINISTRY OF CULTURE PROJECT:ANCIENT EXCHANGES OF CASTLE OF VELICA, REGION OF LARISSA POSITION :SURVEYOR ENGINEER
2014	2014	MUNICIPALITY OF TYRNAVOS, GREECE PROJECT: PROPERTIES OF REGION OF AMPELONA POSITION: LAND SURVEYOR ENGINEER (DIGITATION OF DATA)
2014	2014	EMPLOYER: UNITED ASSOCIATION OF MANAGEMENT OF SOLID WASTE OF REGION OF LARISSA PROJECT: LANDFILL OF LARISSA POSITION: SURVEYOR ENGINEER (MEASUREMENTS OF CELLS)
2011	2006	EMPLOYER: KARKANIAS - ENVIRONMENTAL TECHNOLOGY S.A. PROJECT: WASTE WATER TREATMENT PLANT OF AGIA, GREECE POSITION: LAND SURVEYOR WORKS
2010	2010	MUNICIPALITY OF ELASONA GREECE PROJECT:NATIONAL ROAD ELASSONA-LEFKI POSITION: LAND SURVEYOR ENGINEER , FINAL STUDY
2010	2010	MUNICIPALITY OF POTAMIA, GREECE PROJECT:NATIONAL ROAD ELASSONA-LEFKI POSITION: LAND SURVEYOR ENGINEER , STUDY FOR THE ARRANGEMENT OF STREAM "MANA"
2009	2008	EMPLOYER: KTIMA.GP PROJECT: STUDY OF GEOGRAPHICAL INFORMATION SYSTEMS (G.I.S.) FOR THE MUNICIPALITIES OF LAMIA,KARDITSA,LARISSA,VOLOU

03/12/18

2009	2009	EMPLOYER:PREFECTURE OF LARISSA PROJECT: WORKS FOR FLOOD PROTECTION OF VILLAGE RODIA POSITION: LAND SURVEYOR WORKS
2008	2007	MUNICIPALITIES OF AGIA, NESSONA, ELASONA PROJECTS: GENERAL URBAN PLANS POSITION: LAND SURVEYOR WORKS (COMPILATION OF LAND BACKGRAOUNDS AND MAKING MAPS)
2007	1993	SEVERAL LAND SURVEYOR WORKS FOR HYDRAULIC AND ROAD WORKS

03/12/18

Position **CONSTRUCTION ENGINEER**		
Personnel information	Name * **POUTSIAKAS APOSTOLOS**	Date of birth **08.04.1983**
	Professional qualifications **ARISTOTLE UNIVERSITY OF THESSALONIKI** **FACULTY OF ENGINEERING** **CIVIL ENGINEER MSc**	
Present employment	Name of Employer **KARKANIAS ENVIROMENTAL TECHNOLOGY S.A**	
	Address of Employer **INDUSTRIAL AREA OF LARISA, POSTAL CODE 41004, BOX 3053 GREECE**	
	Telephone **+30 2410 541386**	Contact (manager / personnel officer) **GEORGIOS KARKANIAS**
	Fax **+30 2410 541354**	E-mail **info@karkanias.gr**
	Job title **CIVIL ENGINEER**	Years with present *Employer* ***8***

Summarize professional experience over the last 20 years, in reverse chronological order. Indicate particular technical and managerial experience relevant to the project.

From*	To*	Company, Project , Position, and Relevant Technical and Management Experience*
TODAY	2016	EMPLOYER: KARKANIAS - ENVIRONMENTAL TECHNOLOGY S.A. PROJECT: Landfill extension of the island of Kos,GREECE POSITION: PROJECT MANAGER
2016	2015	EMPLOYER: KARKANIAS - ENVIRONMENTAL TECHNOLOGY S.A. PROJECT: WASTE WATER TREATMENT PLANT OF MOLOS SETTLEMENT, GREECE POSITION: MEMBER OF SITE CONSTRUCTION STUFF
2016	2015	EMPLOYER: KARKANIAS - ENVIRONMENTAL TECHNOLOGY S.A. PROJECT: "B' Phase of the Sanitary Landfill of the Trikala prefecture & its infrastructures" POSITION: MEMBER OF SITE CONSTRUCTION STUFF
2015	2014	EMPLOYER: KARKANIAS - ENVIRONMENTAL TECHNOLOGY S.A. PROJECT: Wastewater Treatment Plant of Kallirachi in Thassos,GREECE POSITION: SITE MANAGER
2014	2013	EMPLOYER: KARKANIAS - ENVIRONMENTAL TECHNOLOGY S.A. PROJECT: Upgrading of existing Wastewater Treatment Plant of Municipality of Makrakomi,GREECE POSITION: SITE MANAGER
2012	2011	EMPLOYER: KARKANIAS - ENVIRONMENTAL TECHNOLOGY S.A. PROJECT: Construction of the 4th Phase of Landfill of the City of Larisa,GREECE POSITION: SITE MANAGER
2011	2011	EMPLOYER: KARKANIAS ENVIRONMENTAL TECHNOLOGY S.A. POSITION: MEMBER OF SITE CONSTRUCTION STUFF PROJECT: EXTENSION OF WASTEWATER TREATMENT PLANT OF LAMIA GREECE
2010	2009	EMPLOYER: KARKANIAS - ENVIRONMENTAL TECHNOLOGY S.A. PROJECT: Design, Construction and Operation (for 6 Months) of the Landfill of Kos Island POSITION: MEMBER OF SITE CONSTRUCTION STUFF
2009	2007	Freelancer - Various technical studies for works-projects of Greek Army

03/12/18

Position* **CONSTRUCTION ENGINEER ALTERNATE**		
Personnel information	Name * **MARGARITIS VASILEIOS**	Date of birth **14.06.1985**
	Professional qualifications **DEMOCRITUS UNIVERSITY OF THRACE** **FACULTY OF ENGINEERING** **CIVIL ENGINEER**	
Present employment	Name of Employer **KARKANIAS ENVIROMENTAL TECHNOLOGY S.A**	
	Address of Employer **INDUSTRIAL AREA OF LARISA, POSTAL CODE 41004, BOX 3053 GREECE**	
	Telephone **+30 2410 541386**	Contact (manager / personnel officer) **GEORGIOS KARKANIAS**
	Fax **+30 2410 541354**	E-mail **info@karkanias.gr**
	Job title **CIVIL ENGINEER**	Years with present *Employer* ***7***

Summarize professional experience in reverse chronological order. Indicate particular technical and managerial experience relevant to the project.

From*	To*	Company, Project , Position, and Relevant Technical and Management Experience*
2017	2015	EMPLOYER: KARKANIAS - ENVIRONMENTAL TECHNOLOGY S.A. PROJECT: DESING AND BUILD OF LEACHATE TREATMENT PLANT AT "LIVADE" LANDFILL IN PODGORICA MONTENEGRO POSITION: SITE MANAGER
2015	2015	EMPLOYER: KARKANIAS - ENVIRONMENTAL TECHNOLOGY S.A. PROJECT: "B' Phase of the Sanitary Landfill of the Trikala prefecture & its infrastructures" POSITION: MEMBER OF SITE CONSTRUCTION STUFF
2014	2014	EMPLOYER: KARKANIAS - ENVIRONMENTAL TECHNOLOGY S.A. POSITION: MEMBER OF SITE CONSTRUCTION STUFF PROJECT: WASTE WATER TREATMENT PLANT OF LEIANOKLADI AND YPATI,(10.000 PE),GREECE
2012	2010	EMPLOYER: KARKANIAS - ENVIRONMENTAL TECHNOLOGY S.A. PROJECT: Extension of WWTP of Lamia, GREECE POSITION: MEMBER OF SITE CONSTRUCTION STUFF
2012	2011	EMPLOYER: KARKANIAS - ENVIRONMENTAL TECHNOLOGY S.A. PROJECT: Extension of WWTP of Lamia (1st stage) POSITION: MEMBER OF SITE CONSTRUCTION STUFF

03/12/18

Position* **ELECTRICAL ENGINEER**		
Personnel information	Name * **KOSTAS MPEZEVEGKIS BASILEIOS**	Date of birth **25.05.1975**
	Professional qualifications **DEMOCRITUS UNIVERSITY OF THRACE** **ELECTRICAL & COMPUTER ENGINEERING SCHOOL** **ELECTRICAL & COMPUTER ENGINEER**	
Present employment	**Free lancer**	
	Address **IPSILANTI 18, FILLIPPIADA, POSTAL CODE 48200, GREECE**	
	Telephone **+30 2683300642**	Contact (manager / personnel officer)
	Fax **+30 2683300642**	E-mail **billkostas75@gmail.com**
	Job title **ELECTRICAL & COMPUTER ENGINEER**	Years with present *Employer*

Summarize professional experience in reverse chronological order. Indicate particular technical and managerial experience relevant to the project.

From*	To*	Company, Project , Position, and Relevant Technical and Management Experience*
TODAY	2016	"Wastewater Management Company G.P" Assosiate for Electrical services - works - repairs of works of the company
2016	2016	"Wastewater Management Company G.P" WWTP OF PARGA AND AKTIO, GREECE Responsible for the electrical services - works - repairs
2016	2016	"Wastewater Management Company G.P" WWTP OF FILLIPPIADA, GREECE Responsible for the electrical services - works - repairs
2016	2016	"Wastewater Management Company G.P" WWTP OF AMFILOCHIA, GREECE Responsible for the electrical services - works - repairs
2015	2013	"Operation and Maintenance of the Sewage Treatment Plant of the Municipality of Filippiada" Responsible Engineer for operation and maintenance monitoring in the project
2013	2010	JV ZIORIS SA- MESOGEIOS E.S. S.A "Operation and Maintenance of the wastewater treatment plant of the Municipality of Filippiada" Responsible engineer for operation and maintenance monitoring works in the project
2012	2010	"ZIORIS SA" "Operation and Maintenance of Wastewater Treatment Plant of the Municipality of Vonitsa" Responsible engineer for operation and maintenance monitoring works in the project
2010	2009	KARKANIAS ENVIROMENTAL TECHNOLOGY S.A "Operation and Maintenance of the Sewage Treatment Plant of the Municipality of Filippiada" Responsible Engineer for operation and maintenance monitoring in the project
2008	2005	J/V ZIORIS-TEGACAT.GEORGE GALANOPOYLOS Co LP "Construction of the big senior highschool of Igoumenitsa". GREECE Responsible for electrical works

03/12/18

Position* **ELECTRICAL ENGINEER ALTERNATE**		
Personnel information	Name * **GKAZGKANIS DIMITRIOS**	Date of birth **13.02.1984**
	Professional qualifications **TECNOLOGICAL EDUCATIONAL INSTITUTE OF LARISSA** **DEPARTMENT OF ELECTRICAL ENGINEERING** **ELECTRICAL ENGINEER**	
Present employment	Name of Employer **KARKANIAS ENVIROMENTAL TECHNOLOGY S.A**	
	Address of Employer **INDUSTRIAL AREA OF LARISA, POSTAL CODE 41004, BOX 3053 GREECE**	
	Telephone **+30 2410 541386**	Contact (manager / personnel officer) **GEORGIOS KARKANIAS**
	Fax **+30 2410 541354**	E-mail **info@karkanias.gr**
	Job title **ELECTRICAL ENGINEER**	Years with present *Employer* **7**

Summarize professional experience in reverse chronological order. Indicate particular technical and managerial experience relevant to the project.

From*	To*	Company, Project , Position, and Relevant Technical and Management Experience*
TODAY	2015	EMPLOYER: KARKANIAS - ENVIRONMENTAL TECHNOLOGY S.A. PROJECT: DESING AND BUILD OF LEACHATE TREATMENT PLANT AT "LIVADE" LANDFILL IN PODGORICA MONTENEGRO POSITION: RESPONSIBLE FOR ELECTRICAL WORKS
2016	2015	EMPLOYER: KARKANIAS - ENVIRONMENTAL TECHNOLOGY S.A. PROJECT: "B' Phase of the Sanitary Landfill of the Trikala prefecture & its infrastructures" POSITION: RESPONSIBLE FOR ELECTRICAL WORKS
2016	2012	EMPLOYER: KARKANIAS - ENVIRONMENTAL TECHNOLOGY S.A. PROJECT: : Rehabilitation of the Landfill of the Kilkis Municipality POSITION: RESPONSIBLE FOR ELECTRICAL WORKS
2014	2014	EMPLOYER: KARKANIAS - ENVIRONMENTAL TECHNOLOGY S.A. PROJECT: Wastewater Treatment Plant of Kallirachi in Thassos,GREECE POSITION: RESPONSIBLE FOR ELECTRICAL WORKS
2013	2013	EMPLOYER: KARKANIAS - ENVIRONMENTAL TECHNOLOGY S.A. PROJECT: Construction of the 4th Phase of Landfill of the City of Larisa POSITION: RESPONSIBLE FOR ELECTRICAL WORKS
2012	2011	EMPLOYER: KARKANIAS - ENVIRONMENTAL TECHNOLOGY S.A. PROJECT: Extension of WWTP of Lamia (1st stage) POSITION: RESPONSIBLE FOR ELECTRICAL WORKS
2012	2010	EMPLOYER: KARKANIAS - ENVIRONMENTAL TECHNOLOGY S.A. PROJECT: Extension of WWTP of Lamia, GREECE POSITION: RESPONSIBLE FOR ELECTRICAL WORKS
2009	2009	EMPLOYER: KARKANIAS - ENVIRONMENTAL TECHNOLOGY S.A. PROJECT: Design, Construction and Operation (for 6 Months) of the Landfill of Kos Island POSITION: RESPONSIBLE FOR ELECTRICAL WORKS

03/12/18

Position*DESIGNER OF WWTP/WATER SUPPLY/FS		
Personnel information	Name * **ARGYROULI FOTEINI**	Date of birth **18.05.1968**
	Professional qualifications **ARISTOTLE UNIVERSITY OF THESSALONIKI** **FACULTY OF ENGINEERING** **CHEMICAL ENGINEER MSc**	
Present employment	Name of Employer **FREE LANCER**	
	Address of Employer **6, Panagouli str., 41222, Larissa**	
	Telephone **+30 2410236263**	Contact (manager / personnel officer) **Foteini Argyrouli**
	Fax **+30 2410236263**	E-mail **argyf100@gmail.com**
	Job title **CHEMICAL ENGINEER**	Years with present Employer

Summarize professional experience in reverse chronological order. Indicate particular technical and managerial experience relevant to the project.

From*	To*	Company, Project, Position and Relevant Experience*
2016	2016	EMPLOYER: MUNICIPALITY OF KILELER PROJECT: Wastewater treatment plant of Nikaia POSITION: PROCESS DESIGN ENGINEER - Preliminary Design
2016	2016	EMPLOYER: MUNICIPALITY OF KILELER PROJECT: Environmental impact assessment of Wastewater treatment plant of Nikaia POSITION: ENVIRONMENTAL STUDY ENGINEER
2016	2016	EMPLOYER: MUNICIPALITY OF ALONNISOS ISLAND PROJECT: Environmental impact assessment of Fishing shelter at "Kalamakia" POSITION: ENVIRONMENTAL STUDY ENGINEER
2015	2015	EMPLOYER: MUNICIPALITY OF ALONNISOS ISLAND PROJECT: Environmental impact assessment of Fishing shelter at "Gerakas" POSITION: ENVIRONMENTAL STUDY ENGINEER
2015	2015	EMPLOYER: MUNICIPALITY OF ALONNISOS ISLAND PROJECT: Environmental impact assessment of Fishing shelter at "Votsi" POSITION: ENVIRONMENTAL STUDY ENGINEER
2015	2015	EMPLOYER: MUNICIPALITY OF TEMPI PROJECT: Wastewater treatment plant of Sikourio POSITION: PROCESS DESIGN ENGINEER - Preliminary Design
2014	2014	EMPLOYER: Municipal Water and Sewerage Company of Siteia PROJECT: Wastewater treatment plant of Paraspori POSITION: PROCESS DESIGN ENGINEER - Preliminary Design
2014	2014	EMPLOYER: COMBINE OF IOANNIS PAPAGIANNIS & CO – TZIKAS CONSTRUCTIONS PROJECT: Wastewater treatment plant of Polidendri POSITION: PROCESS DESIGN ENGINEER- Final Study
2014	2014	EMPLOYER: COMBINE OF TECHNODOMIKI AIGAIOU S.A. – D. KAFETZIS & CO PROJECT: Wastewater treatment plant of Nea Koutali POSITION: PROCESS DESIGN ENGINEER- Construction Study

03/12/18

Position* **DESIGNER OF WWTP/WATER SUPPLY/FS ALTERNATE**		
Personnel information	Name * **STAVROULA ALEXIOU**	Date of birth **22.09.1974**
	Professional qualifications **ARISTOTLE UNIVERSITY OF THESSALONIKI** **FACULTY OF ENGINEERING** **CHEMICAL ENGINEER MSc**	
Present employment	Name of Employer **KARKANIAS ENVIROMENTAL TECHNOLOGY S.A**	
	Address of Employer **INDUSTRIAL AREA OF LARISA, POSTAL CODE 41004, BOX 3053 GREECE**	
	Telephone **+30 2410 541386**	Contact (manager / personnel officer) **VASILIKI KARKANIA CEO**
	Fax **+30 2410 541354**	E-mail **info@karkanias.gr**
	Job title **CHEMICAL ENGINEER**	Years with present *Employer* ***17***

Summarize professional experience in reverse chronological order. Indicate particular technical and managerial experience relevant to the project.

From*	To*	Company, Project , Position, and Relevant Technical and Management Experience*
2017	2017	KARKANIAS - ENVIRONMENTAL TECHNOLOGY S.A. Application Technical study of the work "Study - Construction for the Upgrade - Extension of the Waste Water Cleaning Plant in the IN.AR. of Larissa". Technical company Colleague - Designer with the object the compilation of chemico-technical study for the construction of the work
2016	2016	KARKANIAS - ENVIRONMENTAL TECHNOLOGY S.A Offer Technical Study "Study - Construction for the Upgrade - Extension of the Waste Water Cleaning Plant in the IN.AR. of Larissa". Technical company Colleague - Designer with the object the compilation of chemico-technical study for the participation in the tender of ETVA IN.AR. S.A.
2015	2015	KARKANIAS - ENVIRONMENTAL TECHNOLOGY S.A Final Design of the work "Design and Construction of a Leachate Treatment Plant at Livade Landfill in Podgoritsa, Montenegro" of Deponija. Colleague - Designer of the contracting partnership with the object the compilation of the technological design.
2015	2015	KARKANIAS - ENVIRONMENTAL TECHNOLOGY S.A Offer Technical Study of the work "Extension of the Installations of the Biological Cleaning of Karpenisi" Technical company Colleague - Designer with the object the compilation of chemico-technical study for the participation in the tender of the Municipality of Karpenisi
2015	2014	KARKANIAS - ENVIRONMENTAL TECHNOLOGY S.A Final Study - Application Study of work "Waste Water Treatment Plant of the community of Molos" of the Municipality of Molos-Agios Konstantinos. Colleague - Designer of the contracting company with the object the compilation of the technological design.
2014	2014	KARKANIAS - ENVIRONMENTAL TECHNOLOGY S.A Application study of the work "Waste Water Treatment Plant of Leianokladi - Ypati" of DEYA (Municipal Water and Sewage Company) LAMIA. Colleague - Designer of the contracting company with the object the compilation of the technological design

03/12/18

2014	2014	KARKANIAS - ENVIRONMENTAL TECHNOLOGY S.A Final study of the work "Waste Water Treatment Plant of Leianokladi - Ypati" of DEYA LAMIA. Colleague - Designer of the contracting company with the object the compilation of the technological design
2014	2014	KARKANIAS - ENVIRONMENTAL TECHNOLOGY S.A Offer technical study of the work "Waste Water Treatment Plant of Agiokampos, Kato Sotiritsa and Velika of the M.U. of Melivoia". Technical company Colleague - Designer with the object the compilation of chemico-technical study for the participation in the tender of the Region of Thessaly-R.U. of Larissa-Technical works Dir/te
2013	2013	KARKANIAS - ENVIRONMENTAL TECHNOLOGY S.A Offer Technical Study of the work "Waste Water Treatment Plant of the community of Molos". Technical company Colleague - Designer with the object the compilation of chemico-technical study for the participation in the tender of the Municipality of Molos-Agios Kontantinos
2013	2013	KARKANIAS - ENVIRONMENTAL TECHNOLOGY S.A Offer Technical Study of the work "Waste Water Treatment Plant of Leianokladi - Ypati". Technical company Colleague - Designer with the object the compilation of chemico-technical study for the participation in the tender of DEYA LAMIA
2013	2013	KARKANIAS - ENVIRONMENTAL TECHNOLOGY S.A Offer Technical Study of the work "Extension of Waste Water Treatment Plant of the Municipality of Ioannina". Technical company Colleague - Designer with the object the participation in the compilation of chemico-technical study for the participation in the tender of DEYA IOANNINA
2013	2013	KARKANIAS - ENVIRONMENTAL TECHNOLOGY S.A Offer Technical Study of the work "Water supply of the eastern side of the Prefecture of Karditsa from the Smokovo lake: Water Storage and Treatment Works". Technical company Colleague - Designer with the object the participation in the compilation of chemico-technical study for the participation in the tender of the REGION OF THESSALY
2012	2012	KARKANIAS - ENVIRONMENTAL TECHNOLOGY S.A Offer Technical Study of the work "Waste Water Cleaning Plant of the Municipality of Spetses". Technical company Colleague - Designer with the object the participation in the compilation of chemico-technical study for the participation in the tender of the REGION OF ATTICA
2012	2012	KARKANIAS - ENVIRONMENTAL TECHNOLOGY S.A Offer Technical Study of the work "Waste Water Treatment Plant Construction of the community of Prosotsani". Technical company Colleague - Designer with the object the compilation of chemico-technical study for the participation in the tender of the Municipality of Prosotsani
2011	2011	KARKANIAS - ENVIRONMENTAL TECHNOLOGY S.A Offer Technical Study of the work "WASTE WATER TREATMENT PLANT OF KALAVRYTA". Technical company Colleague - Designer with the object the compilation of chemico-technical study for the participation in the tender of the DIRECTORATE OF TECHNICAL WORKS OF THE REGION OF WESTERN GREECE
2011	2011	KARKANIAS - ENVIRONMENTAL TECHNOLOGY S.A Offer Technical Study of the work "WASTE WATER TREATMENT PLANT OF THE MUNICIPALITY OF MOUZAKI". Technical company Colleague - Designer with the object the compilation of chemico-technical study for the participation in the tender
2007	2007	KARKANIAS - ENVIRONMENTAL TECHNOLOGY S.A Offer Technical Study of the work "Waste Water Treatment Plant of the Municipality Evrimenon". Technical company Colleague - Designer with the object the compilation of chemico-technical study for the participation in the tender

03/12/18

2007	2007	KARKANIAS - ENVIRONMENTAL TECHNOLOGY S.A Offer Technical Study of the work "Waste Water Treatment Plant of Pteleos - Pigadiou". Technical company Colleague - Designer with the object the compilation of chemico-technical study for the participation in the tender
2007	2007	KARKANIAS - ENVIRONMENTAL TECHNOLOGY S.A Updating of the Environmental Consequences Study of the work "Sanitary Landfill of the P. of Pelion". Study contractor
2007	2006	KARKANIAS - ENVIRONMENTAL TECHNOLOGY S.A Application study of the work "Waste Waster Treatment Plant of the Municipality of Farsala". Colleague - Designer of the contracting company with the object the compilation of the technological design.
2007	2006	KARKANIAS - ENVIRONMENTAL TECHNOLOGY S.A Application Study of the work "Biological Cleaning of the Municipality of Agia". Colleague - Designer of the contracting company with the object the compilation of the technological design.
2006	2006	MUNICIPALITY OF DOMOKOS Final study of the work "WASTE WATER TREATMENT PLANT OF THE MUNICIPALITY OF DOMOKOS". Contracting designer with the object the compilation of the chemico-technical study
2006	2006	KARKANIAS - ENVIRONMENTAL TECHNOLOGY S.A Offer technical study of the work "Waste Waster Treatment Plant of the Municipality of Farsala". Technical company Colleague - Designer with the object the compilation of chemico-technical study for the participation in the tender
2006	2006	KARKANIAS - ENVIRONMENTAL TECHNOLOGY S.A Waste water treatment and disposal study of the work "UPDATE AND EXTENSION OF THE BIOLOGICAL CLEANING OF THE MUNICIPAL SLAUGHTER HOUSE OF ALMYROS". Study contractor
2006	2006	KARKANIAS - ENVIRONMENTAL TECHNOLOGY S.A Offer Technical Study of the work "Biological Cleaning of the Municipality of Agia". Technical company Colleague - Designer with the object the compilation of chemico-technical study for the participation in the tender
2006	2006	MUNICIPALITY ELYMNION Compilation of final study and auction issues for the work "SEWAGE WATER RECEPTION AND PRETREATMENT PLANT OF THE BIOLOGICAL CLEANING INSTALLATIONS OF THE M.D. OF LIMNI". Study contractor
2005	2005	KARKANIAS - ENVIRONMENTAL TECHNOLOGY S.A Offer Technical Study of the work "Additional Works of the Waste Water Treatment Plant of the Municipality of Amyntaio". Technical company Colleague - Designer with the object the compilation of chemico-technical study for the participation in the tender
2005	2005	KARKANIAS - ENVIRONMENTAL TECHNOLOGY S.A Application study of the work "Waste Waster Treatment Plant of the Municipality of Filippiada". Colleague - Designer of the contracting company with the object the compilation of the chemico-technological design.
2005	2005	KARKANIAS - ENVIRONMENTAL TECHNOLOGY S.A Application Study of the work "Tertiary Waste Water Treatment Works aiming to the irrigation - treated waste water distribution network" of DEYA Kos. Colleague - Designer of the contracting company with the object the compilation of the technological design
2005	2005	KARKANIAS - ENVIRONMENTAL TECHNOLOGY S.A Application study of the work "Improvement of Biological Cleaning Installations of Lamia". Colleague - Designer of the contracting company with the object the compilation of the technological design
2004	2004	KARKANIAS - ENVIRONMENTAL TECHNOLOGY S.A Offer Technical Study of the work "Waste Waster Treatment Plant of the Municipality of Filippiada". Technical company Colleague - Designer with the object the compilation of chemico-technical study for the participation in the tender

03/12/18

2004	2004	KARKANIAS - ENVIRONMENTAL TECHNOLOGY S.A Offer Technical Study of the work "Improvement of the Biological Cleaning Installations of Lamia". Technical company Colleague - Designer with the object the compilation of chemico-technical study for its participation in the tender of DEYA LAMIA
2004	2004	MUNICIPALITY ELYMNION Compilation of prestudy of the work "Sewage Water Reception and Pretreatment in the Biological Cleaning Plant of Limni Euboea". Study contractor
2004	2004	MUNICIPALITY ELYMNION Compilation of the prestudy of the work "Repair of the E/M Equipment of the Biological Cleaning Plant of the Municipal District of Limni". Study contractor
2003	2003	KARKANIAS - ENVIRONMENTAL TECHNOLOGY S.A Offer Technical Study of the work "Extension of the Biological Cleaning Installations of Tyrnavos". Technical company Colleague - Designer with the object the compilation of chemico-technical study for the participation in the tender
2002	2002	KARKANIAS - ENVIRONMENTAL TECHNOLOGY S.A Application Study of the work "Supply and Installation of the Fast Refinery of Dramia". Colleague - Designer of the contracting company with the object the compilation of the technological design
2001	2001	KARKANIAS - ENVIRONMENTAL TECHNOLOGY S.A Offer Study of the work "Supply and Installation of the Fast Refinery of Dramia". Technical company Colleague - Designer with the object the compilation of chemico-technical study for the participation in the tender

03/12/18

Position* **PROCESS DESIGNER OF WWTP**		
Personnel information	Name * **STAVROULA ALEXIOU**	Date of birth **22.09.1974**
	Professional qualifications **ARISTOTLE UNIVERSITY OF THESSALONIKI** **FACULTY OF ENGINEERING** **CHEMICAL ENGINEER MSc**	
Present employment	Name of Employer **KARKANIAS ENVIROMENTAL TECHNOLOGY S.A**	
	Address of Employer **INDUSTRIAL AREA OF LARISA, POSTAL CODE 41004, BOX 3053 GREECE**	
	Telephone **+30 2410 541386**	Contact (manager / personnel officer) **VASILIKI KARKANIA CEO**
	Fax **+30 2410 541354**	E-mail **info@karkanias.gr**
	Job title **CHEMICAL ENGINEER**	Years with present *Employer* ***17***

Summarize professional experience in reverse chronological order. Indicate particular technical and managerial experience relevant to the project.

From*	To*	Company, Project , Position, and Relevant Technical and Management Experience*
2017	2017	KARKANIAS - ENVIRONMENTAL TECHNOLOGY S.A. Application Technical study of the work "Study - Construction for the Upgrade - Extension of the Waste Water Cleaning Plant in the IN.AR. of Larissa". Technical company Colleague - Designer with the object the compilation of chemico-technical study for the construction of the work
2016	2016	KARKANIAS - ENVIRONMENTAL TECHNOLOGY S.A Offer Technical Study "Study - Construction for the Upgrade - Extension of the Waste Water Cleaning Plant in the IN.AR. of Larissa". Technical company Colleague - Designer with the object the compilation of chemico-technical study for the participation in the tender of ETVA IN.AR. S.A.
2015	2015	KARKANIAS - ENVIRONMENTAL TECHNOLOGY S.A Final Design of the work "Design and Construction of a Leachate Treatment Plant at Livade Landfill in Podgoritsa, Montenegro" of Deponija. Colleague - Designer of the contracting partnership with the object the compilation of the technological design.
2015	2015	KARKANIAS - ENVIRONMENTAL TECHNOLOGY S.A Offer Technical Study of the work "Extension of the Installations of the Biological Cleaning of Karpenisi" Technical company Colleague - Designer with the object the compilation of chemico-technical study for the participation in the tender of the Municipality of Karpenisi
2015	2014	KARKANIAS - ENVIRONMENTAL TECHNOLOGY S.A Final Study - Application Study of work "Waste Water Treatment Plant of the community of Molos" of the Municipality of Molos-Agios Konstantinos. Colleague - Designer of the contracting company with the object the compilation of the technological design.
2014	2014	KARKANIAS - ENVIRONMENTAL TECHNOLOGY S.A Application study of the work "Waste Water Treatment Plant of Leianokladi - Ypati" of DEYA (Municipal Water and Sewage Company) LAMIA. Colleague - Designer of the contracting company with the object the compilation of the technological design
2014	2014	KARKANIAS - ENVIRONMENTAL TECHNOLOGY S.A Final study of the work "Waste Water Treatment Plant of Leianokladi - Ypati" of DEYA LAMIA. Colleague - Designer of the contracting company with the object the compilation of the technological design

03/12/18

2014	2014	KARKANIAS - ENVIRONMENTAL TECHNOLOGY S.A Offer technical study of the work "Waste Water Treatment Plant of Agiokampos, Kato Sotiritsa and Velika of the M.U. of Melivoia". Technical company Colleague - Designer with the object the compilation of chemico-technical study for the participation in the tender of the Region of Thessaly-R.U. of Larissa-Technical works Dir/te
2013	2013	KARKANIAS - ENVIRONMENTAL TECHNOLOGY S.A Offer Technical Study of the work "Waste Water Treatment Plant of the community of Molos". Technical company Colleague - Designer with the object the compilation of chemico-technical study for the participation in the tender of the Municipality of Molos-Agios Kontantinos
2013	2013	KARKANIAS - ENVIRONMENTAL TECHNOLOGY S.A Offer Technical Study of the work "Waste Water Treatment Plant of Leianokladi - Ypati". Technical company Colleague - Designer with the object the compilation of chemico-technical study for the participation in the tender of DEYA LAMIA
2013	2013	KARKANIAS - ENVIRONMENTAL TECHNOLOGY S.A Offer Technical Study of the work "Extension of Waste Water Treatment Plant of the Municipality of Ioannina". Technical company Colleague - Designer with the object the participation in the compilation of chemico-technical study for the participation in the tender of DEYA IOANNINA
2013	2013	KARKANIAS - ENVIRONMENTAL TECHNOLOGY S.A Offer Technical Study of the work "Water supply of the eastern side of the Prefecture of Karditsa from the Smokovo lake: Water Storage and Treatment Works". Technical company Colleague - Designer with the object the participation in the compilation of chemico-technical study for the participation in the tender of the REGION OF THESSALY
2012	2012	KARKANIAS - ENVIRONMENTAL TECHNOLOGY S.A Offer Technical Study of the work "Waste Water Cleaning Plant of the Municipality of Spetses". Technical company Colleague - Designer with the object the participation in the compilation of chemico-technical study for the participation in the tender of the REGION OF ATTICA
2012	2012	KARKANIAS - ENVIRONMENTAL TECHNOLOGY S.A Offer Technical Study of the work "Waste Water Treatment Plant Construction of the community of Prosotsani". Technical company Colleague - Designer with the object the compilation of chemico-technical study for the participation in the tender of the Municipality of Prosotsani
2011	2011	KARKANIAS - ENVIRONMENTAL TECHNOLOGY S.A Offer Technical Study of the work "WASTE WATER TREATMENT PLANT OF KALAVRYTA". Technical company Colleague - Designer with the object the compilation of chemico-technical study for the participation in the tender of the DIRECTORATE OF TECHNICAL WORKS OF THE REGION OF WESTERN GREECE
2011	2011	KARKANIAS - ENVIRONMENTAL TECHNOLOGY S.A Offer Technical Study of the work "WASTE WATER TREATMENT PLANT OF THE MUNICIPALITY OF MOUZAKI". Technical company Colleague - Designer with the object the compilation of chemico-technical study for the participation in the tender
2007	2007	KARKANIAS - ENVIRONMENTAL TECHNOLOGY S.A Offer Technical Study of the work "Waste Water Treatment Plant of the Municipality Evrimenon". Technical company Colleague - Designer with the object the compilation of chemico-technical study for the participation in the tender
2007	2007	KARKANIAS - ENVIRONMENTAL TECHNOLOGY S.A Offer Technical Study of the work "Waste Water Treatment Plant of Pteleos - Pigadiou". Technical company Colleague - Designer with the object the compilation of chemico-technical study for the participation in the tender

2007	2007	KARKANIAS - ENVIRONMENTAL TECHNOLOGY S.A Updating of the Environmental Consequences Study of the work "Sanitary Landfill of the P. of Pelion". Study contractor
2007	2006	KARKANIAS - ENVIRONMENTAL TECHNOLOGY S.A Application study of the work "Waste Waster Treatment Plant of the Municipality of Farsala". Colleague - Designer of the contracting company with the object the compilation of the technological design.
2007	2006	KARKANIAS - ENVIRONMENTAL TECHNOLOGY S.A Application Study of the work "Biological Cleaning of the Municipality of Agia". Colleague - Designer of the contracting company with the object the compilation of the technological design.
2006	2006	MUNICIPALITY OF DOMOKOS Final study of the work "WASTE WATER TREATMENT PLANT OF THE MUNICIPALITY OF DOMOKOS". Contracting designer with the object the compilation of the chemico-technical study
2006	2006	KARKANIAS - ENVIRONMENTAL TECHNOLOGY S.A Offer technical study of the work "Waste Waster Treatment Plant of the Municipality of Farsala". Technical company Colleague - Designer with the object the compilation of chemico-technical study for the participation in the tender
2006	2006	KARKANIAS - ENVIRONMENTAL TECHNOLOGY S.A Waste water treatment and disposal study of the work "UPDATE AND EXTENSION OF THE BIOLOGICAL CLEANING OF THE MUNICIPAL SLAUGHTER HOUSE OF ALMYROS". Study contractor
2006	2006	KARKANIAS - ENVIRONMENTAL TECHNOLOGY S.A Offer Technical Study of the work "Biological Cleaning of the Municipality of Agia". Technical company Colleague - Designer with the object the compilation of chemico-technical study for the participation in the tender
2006	2006	MUNICIPALITY ELYMNION Compilation of final study and auction issues for the work "SEWAGE WATER RECEPTION AND PRETREATMENT PLANT OF THE BIOLOGICAL CLEANING INSTALLATIONS OF THE M.D. OF LIMNI". Study contractor
2005	2005	KARKANIAS - ENVIRONMENTAL TECHNOLOGY S.A Offer Technical Study of the work "Additional Works of the Waste Water Treatment Plant of the Municipality of Amyntaio". Technical company Colleague - Designer with the object the compilation of chemico-technical study for the participation in the tender
2005	2005	KARKANIAS - ENVIRONMENTAL TECHNOLOGY S.A Application study of the work "Waste Waster Treatment Plant of the Municipality of Filippiada". Colleague - Designer of the contracting company with the object the compilation of the chemico-technological design.
2005	2005	KARKANIAS - ENVIRONMENTAL TECHNOLOGY S.A Application Study of the work "Tertiary Waste Water Treatment Works aiming to the irrigation - treated waste water distribution network" of DEYA Kos. Colleague - Designer of the contracting company with the object the compilation of the technological design
2005	2005	KARKANIAS - ENVIRONMENTAL TECHNOLOGY S.A Application study of the work "Improvement of Biological Cleaning Installations of Lamia". Colleague - Designer of the contracting company with the object the compilation of the technological design
2004	2004	KARKANIAS - ENVIRONMENTAL TECHNOLOGY S.A Offer Technical Study of the work "Waste Waster Treatment Plant of the Municipality of Filippiada". Technical company Colleague - Designer with the object the compilation of chemico-technical study for the participation in the tender

03/12/18

2004	2004	KARKANIAS - ENVIRONMENTAL TECHNOLOGY S.A Offer Technical Study of the work "Improvement of the Biological Cleaning Installations of Lamia". Technical company Colleague - Designer with the object the compilation of chemico-technical study for its participation in the tender of DEYA LAMIA
2004	2004	MUNICIPALITY ELYMNION Compilation of prestudy of the work "Sewage Water Reception and Pretreatment in the Biological Cleaning Plant of Limni Euboea". Study contractor
2004	2004	MUNICIPALITY ELYMNION Compilation of the prestudy of the work "Repair of the E/M Equipment of the Biological Cleaning Plant of the Municipal District of Limni". Study contractor
2003	2003	KARKANIAS - ENVIRONMENTAL TECHNOLOGY S.A Offer Technical Study of the work "Extension of the Biological Cleaning Installations of Tyrnavos". Technical company Colleague - Designer with the object the compilation of chemico-technical study for the participation in the tender
2002	2002	KARKANIAS - ENVIRONMENTAL TECHNOLOGY S.A Application Study of the work "Supply and Installation of the Fast Refinery of Dramia". Colleague - Designer of the contracting company with the object the compilation of the technological design
2001	2001	KARKANIAS - ENVIRONMENTAL TECHNOLOGY S.A Offer Study of the work "Supply and Installation of the Fast Refinery of Dramia". Technical company Colleague - Designer with the object the compilation of chemico-technical study for the participation in the tender

03/12/18

Position*PROCESS DESIGNER OF WWTP ALTERNATE		
Personnel information	Name * **ARGYROULI FOTEINI**	Date of birth **18.05.1968**
	Professional qualifications **ARISTOTLE UNIVERSITY OF THESSALONIKI** **FACULTY OF ENGINEERING** **CHEMICAL ENGINEER MSc**	
Present employment	Name of Employer **FREE LANCER**	
	Address of Employer **6, Panagouli str., 41222, Larissa**	
	Telephone **+30 2410236263**	Contact (manager / personnel officer) **Foteini Argyrouli**
	Fax **+30 2410236263**	E-mail **argyf100@gmail.com**
	Job title **CHEMICAL ENGINEER**	Years with present Employer **18 (as free lancer)**

Summarize professional experience in reverse chronological order. Indicate particular technical and managerial experience relevant to the project.

From*	To*	Company, Project, Position and Relevant Experience*
2016	2016	EMPLOYER: MUNICIPALITY OF KILELER PROJECT: Wastewater treatment plant of Nikaia POSITION: PROCESS DESIGN ENGINEER - Preliminary Design
2016	2016	EMPLOYER: MUNICIPALITY OF KILELER PROJECT: Environmental impact assessment of Wastewater treatment plant of Nikaia POSITION: ENVIRONMENTAL STUDY ENGINEER
2016	2016	EMPLOYER: MUNICIPALITY OF ALONNISOS ISLAND PROJECT: Environmental impact assessment of Fishing shelter at "Kalamakia" POSITION: ENVIRONMENTAL STUDY ENGINEER
2015	2015	EMPLOYER: MUNICIPALITY OF ALONNISOS ISLAND PROJECT: Environmental impact assessment of Fishing shelter at "Gerakas" POSITION: ENVIRONMENTAL STUDY ENGINEER
2015	2015	EMPLOYER: MUNICIPALITY OF ALONNISOS ISLAND PROJECT: Environmental impact assessment of Fishing shelter at "Votsi" POSITION: ENVIRONMENTAL STUDY ENGINEER
2015	2015	EMPLOYER: MUNICIPALITY OF TEMPI PROJECT: Wastewater treatment plant of Sikourio POSITION: PROCESS DESIGN ENGINEER - Preliminary Design
2014	2014	EMPLOYER: Municipal Water and Sewerage Company of Siteia PROJECT: Wastewater treatment plant of Paraspori POSITION: PROCESS DESIGN ENGINEER - Preliminary Design
2014	2014	EMPLOYER: COMBINE OF IOANNIS PAPAGIANNIS & CO – TZIKAS CONSTRUCTIONS PROJECT: Wastewater treatment plant of Polidendri POSITION: PROCESS DESIGN ENGINEER- Final Study
2014	2014	EMPLOYER: COMBINE OF TECHNODOMIKI AIGAIOU S.A. – D. KAFETZIS & CO PROJECT: Wastewater treatment plant of Nea Koutali POSITION: PROCESS DESIGN ENGINEER- Construction Study

03/12/18

2013	2013	EMPLOYER: MUNICIPALITY OF ELASSONA PROJECT: Environmental impact assessment of Wastewater treatment plant of Krania POSITION: ENVIRONMENTAL STUDY ENGINEER
2013	2013	EMPLOYER: MUNICIPALITY OF KITHNOS ISLAND PROJECT: Environmental impact assessment of Wastewater treatment plant of Dryopida and Kithnos POSITION: ENVIRONMENTAL STUDY ENGINEER
2013	2013	EMPLOYER: Municipal Water and Sewerage Company of Larissa PROJECT: Environmental impact assessment of Wastewater treatment plant of Rachoula POSITION: ENVIRONMENTAL STUDY ENGINEER
2013	2013	EMPLOYER: Municipal Water and Sewerage Company of Larissa PROJECT: Environmental impact assessment of Wastewater treatment plant of Amygdalea POSITION: ENVIRONMENTAL STUDY ENGINEER
2013	2013	EMPLOYER: MINAVRA TECHNIKI S.A. PROJECT: Wastewater treatment plant of Donousa Island POSITION: PROCESS DESIGN ENGINEER- Final Study
2013	2013	EMPLOYER: COSMOS CONSTRUCTION S.A. PROJECT: Wastewater treatment plant of Thirasia Island POSITION: PROCESS DESIGN ENGINEER - Final Study
2013	2013	EMPLOYER: MUNICIPALITY OF AVDIRA PROJECT: Wastewater treatment plant of Avdira POSITION: PROCESS DESIGN ENGINEER - Preliminary Design
2013	2013	EMPLOYER: MUNICIPALITY OF ELASSONA PROJECT: Wastewater treatment plant of Krania POSITION: PROCESS DESIGN ENGINEER - Preliminary Design
2013	2013	EMPLOYER: Municipal Water and Sewerage Company of Larissa PROJECT: Wastewater treatment plant of Rachoula POSITION: PROCESS DESIGN ENGINEER - Preliminary Design
2013	2013	EMPLOYER: Municipal Water and Sewerage Company of Larissa PROJECT: Wastewater treatment plant of Amygdalea POSITION: PROCESS DESIGN ENGINEER - Preliminary Design
2012	2012	EMPLOYER: PARASKEVOPOULOS PANAGIOTIS PROJECT: Wastewater treatment plant of Sapes POSITION: PROCESS DESIGN ENGINEER - Final Study
2012	2012	EMPLOYER: MUNICIPALITY OF KITHNOS ISLAND PROJECT: Wastewater treatment plant of Dryopida and Kithnos POSITION: PROCESS DESIGN ENGINEER - Preliminary Design
2012	2012	EMPLOYER: MUNICIPALITY OF TEMPI PROJECT: Environmental impact assessment of Irrigation network of Pirgetos and Aigani POSITION: ENVIRONMENTAL STUDY ENGINEER
2012	2012	EMPLOYER: PREFECTURE OF THESSALY PROJECT: Environmental impact assessment of Water Dam of Vrisia POSITION: ENVIRONMENTAL STUDY ENGINEER
2011	2011	EMPLOYER: Municipal Water and Sewerage Company of Larissa PROJECT: Environmental impact assessment of Biogas exploitation unit for energy production at Larissa's Landfill POSITION: ENVIRONMENTAL STUDY ENGINEER
2010	2010	EMPLOYER: MUNICIPALITY OF MOUZAKI PROJECT: Environmental impact assessment of Wastewater treatment plant of Drakotripa POSITION: ENVIRONMENTAL STUDY ENGINEER
2010	2010	EMPLOYER: MUNICIPALITY OF EVRIMENES PROJECT: Environmental impact assessment of Wastewater treatment plant of Stomio POSITION: ENVIRONMENTAL STUDY ENGINEER

03/12/18

2010	2010	EMPLOYER: MINISTRY OF CULTURE PROJECT: Environmental impact assessment of Messara's Archaeological Museum POSITION: ENVIRONMENTAL STUDY ENGINEER
2009	2009	EMPLOYER: MUNICIPALITY OF MESOLOURI PROJECT: Environmental impact assessment of Wastewater treatment plant of Mesolouri POSITION: ENVIRONMENTAL STUDY ENGINEER
2008	2008	EMPLOYER: MUNICIPALITY OF LARISSA PROJECT: Environmental impact assessment of "Karagiorga" road POSITION: ENVIRONMENTAL STUDY ENGINEER
2007	2007	EMPLOYER: MINISTRY OF CULTURE PROJECT: Environmental impact assessment of Byzantine – Christian Museum POSITION: ENVIRONMENTAL STUDY ENGINEER
2007	2007	EMPLOYER: MUNICIPALITY OF LARISSA PROJECT: Environmental impact assessment of "Karditsis" road POSITION: ENVIRONMENTAL STUDY ENGINEER
2006	2006	EMPLOYER: MUNICIPALITY OF MAKRYCHORI PROJECT: Environmental impact assessment of Kypselochori-Makrychori road POSITION: ENVIRONMENTAL STUDY ENGINEER
2006	2006	EMPLOYER: MUNICIPALITY OF POLYDAMANDAS PROJECT: Environmental impact assessment of Water borehole at Palaiomylos POSITION: ENVIRONMENTAL STUDY ENGINEER

03/12/18

UNIQA neživotno osiguranje a.d. Podgorica CAR 11/2013

Na osnovu Zakona o osiguranju Republike Crne Gore i Statuta Društva, na sjednici Odbora direktora „UNIQA neživotno osiguranje" a.d. Podgorica, održanoj dana 01.11.2013. godine, donijet je sljedeći akt poslovne politike:

AKCIONARSKO DRUŠTVO ZA OSIGURANJE
UNIQA
NEŽIVOTNO OSIGURANJE
Br. 0102a-4/1
01.11. 2013 god.
PODGORICA, Bul. Sv. Petra Cetinjskog 1A/IV

POSEBNI USLOVI ZA OSIGURANJE OBJEKATA U IZGRADNJI PROTIV SVIH RIZIKA (CAR)

GEORGIOS KARKANIAS
PRESIDENT

03/12/18

POSEBNI USLOVI ZA OSIGURANJE OBJEKATA U IZGRADNJI PROTIV SVIH RIZIKA

Ovi posebni uslovi se primjenjuju na osiguranja za koja je osiguranik dao osiguravaču pismenu ponudu popunivši Upitnik koji se, zajedno sa svim ostalim pismenim aktima dostavljenim osiguravaču koje je sačinio osiguranik, smatra sastavnim dijelom polise osiguranja.

Osiguravač se obavezuju da isplati osiguraniku naknadu iz osiguranja na način i u obimu koji je ugovoren, pod uslovom da je osiguranik platio osiguravaču premiju osiguranja navedenu u polisi i pod uslovima, rokovima, isključenjima i odredbama ovih Posebnih uslova.

Opšta isključenja

Osiguravač nije u obavezi da isplati naknadu iz osiguranja osiguraniku za štetu ili odgovornost koji su neposredno ili posredno prouzrokovani, proističu ili su pogoršani:

a) ratom, invazijom, djelovanjem stranog neprijatelja, neprijateljstvima (bilo da je rat zvanično objavljen ili ne), građanskim ratom, pobunom, revolucijom, ustankom, bunom, neredima, štrajkom, demonstracijama, prisilnim zatvaranjem fabrika i radnih mjesta, građanskim nemirima, vojnom ili uzurpiranom vlašću, grupom zlonamjernih osoba ili osoba koje djeluju u ime ili u vezi sa bilo kojom političkom organizacijom, zavjerom, konfiskacijom, nasilnim preuzimanjem, rekvizicijom ili uništenjem ili štetom načinjenom po naređenju bilo koje Vlade de iure ili de facto ili bilo koje javne vlasti;
b) nuklearnom reakcijom, nuklearnom radijacijom ili radioaktivnom kontaminacijom;
c) voljnim činjenjem ili voljnim propuštanjem činjenja od strane osiguranika ili lica koja ga zastupaju;
d) potpunom ili djelimičnom obustavom rada

U bilo kakvoj parnici ili drugom postupku u kojima Osiguravač tvrdi da, prema odredbama gore navedenog isključenja pod a), bilo kakav gubitak, uništenje, oštećenje ili odgovornost nijesu pokriveni ovim osiguranjem teret dokazivanja da su takav gubitak, uništenje, oštećenje ili odgovornost pokriveni je na osiguraniku.

Period pokrića

Obaveza osiguravača počinje, bez obzira na bilo koji datum koji bi bio suprotan datumu navedenom u polisi osiguranja, odmah po započinjanju radova ili nakon istovara predmeta osiguranja, navedenih u polisi, na mjesto izvođenja radova. Obaveze osiguravača prestaju za djelove osiguranih radova koji su preuzeti ili stavljeni u upotrebu.

Osiguranje ističe najkasnije na datum naveden u polisi. Bilo kakvo produženje perioda osiguranja je moguće samo uz prethodnu pismenu saglasnost osiguravača.

GEORGIOS KARKANIAS
PRESIDENT

03/12/18

Opšti uslovi

1. Poštovanje i ispunjenje ovih Posebnih uslova, ukoliko se oni odnose na bilo šta što osiguranik treba da učini, ili u skladu sa čim treba da postupi i istinitost iskaza i odgovora u upitniku i ponudi, datoj od strane osiguranika, su preduslov za bilo kakvu odgovornost osiguravača.
2. Obrazac tabelarnog priloga uz polisu (schedule) i Odjeljci će se smatrati sastavnim dijelom ovih Posebnih uslova, a izraz „Posebni uslovi" kad god se koristi u ovom ugovoru podrazumijevaće ujedno Obrazac tabelarnog priloga polise (Schedule) i Odjeljke. Bilo koja riječ ili izraz kojima je pripisano posebno značenje u bilo kom dijelu ovih Posebnih uslova ili Obrasca tabelarnog priloga uz polisu (schedule) ili Odeljaka nosiće takvo značenje gdje god se pojave.
3. Osiguranik će o sopstvenom trošku preduzeti sve razumne preventivne mjere i postupiće u skladu sa svim razumnim preporukama osiguravača u cilju sprečavanja štete ili odgovornosti i poštovati sve zakonske uslove i preporuke proizvođača.
4. a) Predstavnici osiguravača imaju pravo da, u bilo koje razumno vrijeme, izvrše pregled i ispitaju rizik, a osiguranik je obavezan da predstavnicima osiguravača dostavi sve detalje i informacije neophodne za procjenu rizika.
   b) Osiguranik je obavezan da odmah obavijesti osiguravače telegramom i u pisanoj formi o bilo kakvoj promjeni rizika i da preduzme, o svom trošku, sve dodatne mjere obezbjeđenja, prema datim okolnostima, s tim što će obim pokrića i premija, po potrebi, biti usklađeni.

Osiguranik ne može vršiti bilo kakve materijalne izmjene, niti priznanja, kojima se rizik povećava, dok osiguravači pismeno ne potvrde nastavak osiguranja u tom slučaju.

5. U slučaju bilo kakvog događaja koji bi mogao da dovede do zahtjeva po osnovu ove Polise, osiguranik je obavezan da:

a) odmah obavijesti osiguravača telefonom ili telegramom, kao i u pisanoj formi, navodeći prirodu i obim štete;
b) preduzme sve mjere koje su u njegovoj moći kako bi smanjio obim štete;
c) sačuva oštećene djelove i učini ih dostupnim za pregled predstavnicima osiguravača ili procjeniteljima;
d) dostavi sve informacije ili pismene dokaze koje osiguravač zahtijeva;
e) obavijesti policiju u slučaju štete koja je posljedica krađe ili provalne krađe.

6. Osiguravači nijesu odgovorni za štetu za koju nijesu primili nikakvo obavještenje od osiguranika u roku od 14 dana od dana nastanka osiguranog slučaja. Nakon obavještavanja osiguravača, osiguranik može da izvrši popravke ili zamjene kod manjih oštećenja; u svim drugim slučajevima predstavniku osiguravača biće omogućeno da pregleda oštećenja prije bilo kakvih popravki ili izmjena. Ako predstavnik osiguravača ne izvrši pregled u roku koji se može smatrati odgovarajućim prema okolnostima slučaja, tada osiguranik ima pravo da vrši popravke i zamjene. Obaveze osiguravača, po ovim Posebnim uslovima, u pogledu bilo kakve stvari koja je pretrpjela štetu prestaju ukoliko oštećena stvar nije valjano popravljena bez odlaganja.
   Osiguranik će, o trošku osiguravača, učiniti, saglasiti se činjenjem ili dozvoliti činjenje akata i radnji koje su neophodne ili koje zahtijeva osiguravač u cilju ostvarenja prava, upotrebe pravnog sredstva, dobijanja olakšica ili ostvarenja naknade od drugih lica (osim onih koja su osigurana po osnovu polise izdate po ovim Posebnim uslovima) na koje je osiguravač ovlašćen ili u pogledu kojih ima pravo regresa, a po isplati naknade ili popravci za bilo koju štetu po polisi izdatoj po ovim Posebnim uslovima, bez obzira da li su takvi akti i radnje postale neophodne ili ih osiguravač zahtijeva prije ili poslije isplate naknade osiguraniku.

7. U slučaju neslaganja u pogledu iznosa koji treba isplatiti po osnovu polise izdate po ovim Posebnim uslovima (pri čemu je utvrđen osnov) za takve sporove će biti nadležan Arbitar koga će imenovati, u pisanoj formi, strane u sporu, a ako se strane ne slože oko imenovanja jednog Arbitra, tada će biti nadležna dva Arbitra, od kojih će svaka od strana pismeno imenovati jednog u roku od jednog kalendarskog mjeseca po zahtjevu neke od strana, ili, u slučaju da se Arbitri ne slože, nadležan će biti Predsjedavajući arbitraže koga će imenovati Arbitri prije upuštanja u postupak. Predsjedavajući arbitar će zasijedati sa Arbitrima i predsjedavati njihovim sastancima. Donošenje odluke od strane arbitara će biti preduslov za podnošenje tužbe protiv osiguravača.

8. Ukoliko je zahtjev u bilo kom pogledu prevaran, ili sadrži ili je potkrijepljen bilo kakvim lažnim iskazom, ili ukoliko se osiguranik ili bilo ko drugi ko postupa za njegov račun posluži bilo kakvim neistinitim sredstvima ili postupcima u cilju ostvarivanja koristi po polisi izdatoj po ovim Posebnim uslovima, ili ako potraživanje bude odbijeno, a nikakav postupak ili parnica ne bude pokrenuta u roku od tri mjeseca po odbijanju, ili u

GEORGIOS KARKANIAS
PRESIDENT

03/12/18

slučaju arbitraže, kao što je predviđeno, u roku od tri mjeseca nakon što Arbitar ili Arbitri ili Predsjedavajući arbitar donesu odluku, prestaje svako pravo na naknadu po osnovu polise izdate na osnovu ovih Posebnih uslova.

9. Ukoliko u vrijeme podnošenja zahtjeva po polisi izdatoj po ovim Posebnim uslovima postoji drugo osiguranje koje pokriva istu štetu ili odgovornost, osiguravač neće biti u obavezi da plati više od srazmjernog dijela u odnosu na takvu štetu ili odgovornost.

Odjeljak I – Materijalna šteta

Ukoliko u bilo kom trenutku tokom perioda pokrića predmeti-stavke ili bilo koji njihov dio koji su navedeni u tabelarnom prilogu polise (Schedule) izdate po ovim Posebnim uslovima pretrpe bilo kakav nepredviđeni ili iznenadni fizički gubitak ili oštećenje iz bilo kog razloga, izuzev onih koji su posebno isključeni, na način koji iziskuje popravku ili zamjenu, osiguravač je obavezan da isplati osiguraniku naknadu za takvu štetu bilo plaćanjem u gotovini, zamjenom ili popravkom (prema sopstvenom izboru) do iznosa koji, za svaku od stavki navedenih u tabelarnom prilogu polise (schedule) izdate po ovim Posebnim uslovima, ne prelazi sumu koja stoji pored tih stavki i koja ni u jednom slučaju ne prelazi limit odgovornosti tamo gdje je on primjenljiv i koja ne prelazi, u ukupnom zbiru, ukupnu sumu osiguranja navedenu u tabelarnom prilogu polise (schedule).

Osiguravač će takođe osiguraniku nadoknaditi troškove uklanjanja ostataka (raščišćavanja ruševina) nakon svakog događaja koji mu daje pravo na zahtev po ovoj polisi pod uslovom da je posebna suma ugovorena i upisana u tabelarni prilog polise izdate po ovim Posebnim uslovima.

Posebna isključenja po Odjeljku I

Osiguravač ni u kom slučaju nije u obavezi da naknadi:

a) Iznos franšize naveden u tabelarnom prilogu polise izdate po ovim Posebnim uslovima koji osiguranik snosi po svakom štetnom događaju;

b) posljedične štete bilo koje vrste uključujući ugovorne kazne, štete nastale usljed kašnjenja, neizvršenja obaveze, raskida ugovora;

c) štete zbog greške u projektu;

d) troškove zamjene, popravke ili ispravke neispravnog materijala i/ili radova, s tim što je ovo isključenje ograničeno na stavke neposredno pogođene i neće se smatrati isključenim štete na ispravno izvršenim pozicijama koje su oštećene usljed neispravnih materijala i radova;

e) habanje, koroziju, oksidaciju, pogoršavanje usljed nekorišćenja i normalnih atmosferskih uslova;

f) mehaničke i/ili električne kvarove ili neispravnosti građevinske opreme, opreme i građevinske mehanizacije;

g) štete prouzrokovane vozilima za javni saobraćaj, plovnim sredstvima ili letjelicama;

h) gubitak ili štetu nastalu na dokumentima, crtežima, računima, mjenicama, novcu, markama, spisima, evidentiranju dugova, komercijalnim zapisima, hartijama od vrijednosti, čekovima;

i) štete otkrivene tek u vrijeme pravljenja popisa (inventara).

Odredbe koje se primjenjuju na Odjeljak I

Memo 1 – Osigurane sume: Sume osiguranja navedene u tabelarnom prilogu polise – schedule izdate po ovim Posebnim uslovima ne smiju biti manje od:

za stavku 1: pune vrijednosti ugovorenih radova u vrijeme završetka izgradnje, uključujući sve materijale, zarade, vozarinu, carinske troškove, dažbine i materijale koje isporučuje naručilac;

GEORGIOS KARKANIAS
PRESIDENT

03/12/18

za stavke 2 i 3: novonabavnu vrijednost građevinske opreme, opreme i mehanizacije za izvođenje radova, što znači troškove zamjene osiguranih stavki novima iste vrijednosti i kapaciteta,

a osiguranik je obavezan da uveća ili smanji sume osiguranja u slučaju bilo kakvih materijalnih promjena u nivou plata ili cijena, uvijek pod uslovom da takvo uvećanje ili smanjenje stupa na snagu tek pošto ga osiguravač unese u polisu.

Ako, u slučaju štete, bude ustanovljeno da su sume osiguranja manje od iznosa na koji osiguranje treba da bude zaključeno, onda će se iznos naknade iz osiguranja koji osiguranik može da naplati po osnovu polise izdate po ovim Posebnim uslovima umanjiti srazmjerno odnosu osigurane sume prema sumi osiguranja na koju je osiguranje trebalo da bude izvršeno. Svaki predmet i trošak podliježe ovom uslovu zasebno.

Memo 2 – Osnovi za likvidaciju štete: u slučaju bilo kakve štete, osnov za likdivaciju štete po ovoj polisi će biti:

a) u slučaju štete koja se može popraviti - troškovi popravke potrebni da se predmeti vrate u stanje neposredno prije nastanka štete umanjeno za vrijednost spašenog, ili

b) u slučaju totalne štete – stvarna vrijednost predmeta neposredno prije gubitka umanjeno za vrijednost spašenog;

ali samo u obimu u kome je zahtijevane troškove morao da snosi osiguranik i u obimu u kome su isti obuhvaćeni sumama osiguranja i uvijek pod uslovom da su poštovane ugovorene odredbe i ovi Posebni uslovi.

Osiguravač će izvršiti isplatu tek nakon dostavljanja potrebnih računa i dokumenata koji potvrđuju da su popravke izvršene ili da je izvršena zamjena, prema okolnostima slučaja. Svaka šteta koja se može popraviti biće popravljena, ali ako su troškovi popravke bilo koje štete jednaki ili veći od vrijednosti predmeta neposredno prije nastanka štete, šteta će biti likvidirana kao što je navedeno gore pod b).

Troškove bilo kakvih privremenih popravki snosiće osiguravači ako takve popravke čine dio konačnih popravki i ne uvećavaju ukupne troškove popravki.

Troškovi bilo kakvih izmjena, dodataka i/ili poboljšanja nijesu pokriveni polisom koja se izdaje po ovim Posebnim uslovima.

Odjeljak II – Odgovornost za štete pričinjene trećim licima

Osiguravači će isplatiti osiguraniku naknadu do iznosa, ali ne preko iznosa navedenog u tabelarnom prilogu polise (schedule) po ovim Posebnim uslovima za sume koje osiguranik bude po zakonu obavezan da plati za štete koje su posljedica

a) slučajne tjelesne povrede ili bolesti trećih lica (bilo smrtne ili ne)
b) slučajne štete na imovini koja pripada trećim licima,

a koje se dese u neposrednoj vezi sa izgradnjom ili montažom stavki osiguranih po osnovu Odjeljka I polise izdate po ovim Posebnim uslovima ili u neposrednoj blizini mjesta izvođenja radova tokom perioda osiguranja.

Pored zahtjeva za naknadu na koji se navedeno osiguranje odnosi, osiguravač će osiguraniku naknaditi i:
a) sve troškove parničnog postupka koje oštećeni naplati od osiguranika i
b) sve troškove sa kojima su se osiguravači pismeno saglasili,
uvijek pod uslovom da obaveze osiguravača po osnovu ovog odjeljka ne prelaze limit odgovornosti naveden u Tabelarnom prilogu polise (schedule).

Posebna isključenja po Odjeljku II

Osiguravač nije obavezan da osiguraniku plati naknadu za:

1. iznos franšize naveden u tabelarnom prilogu polise (schedule) izdate po ovim Posebnim uslovima koji snosi osiguranik po svakom osiguranom slučaju;

2. troškove nastale prilikom činjenja, ponovnog činjenja, popravke ili zamjene bilo čega što je pokriveno ili se može pokriti po osnovu Odjeljka I ovih Posebnih uslova;

GEORGIOS KARKANIAS
PRESIDENT

03/12/18

3. štete na imovini, zemljištu ili objektima prouzrokovane vibracijama, uklanjanjem ili slabljenjem potpora, kao i štete usljed tjelesnih povreda lica ili oštećenja imovine koje su se desile ili proizilaze iz ovakvih šteta (izuzev ukoliko nije posebno ugovoreno odgovarajućim prilogom)

4. odgovornosti koja je posljedica:
   a) tjelesne povrede ili bolesti zaposlenih ili radnika izvođača radova, naručioca ili neke druge firme koja je u vezi sa projektom koja je ili čiji je dio osiguran po osnovu Odjeljka I, kao i članova njihovih porodica;
   b) štete na imovini koja pripada ili je u državini, pod nadzorom, staranjem ili kontrolom izvođača radova, naručioca ili neke druge firme koja je povezana sa radovima koja je ili čiji je dio osiguran po osnovu Odjeljka I, kao i zaposlenih ili radnika bilo koga od gore pomenutih;
   c) bilo kakve nezgode prouzrokovane vozilima za javni saobraćaj, plovnim sredstvima ili letjelicama;
   d) bilo kakvog sporazuma osiguranika o plaćanju bilo kakve sume u vidu naknade ili nekom drugom vidu, izuzev ukoliko bi to bila obaveza i u odsustvu takvog sporazuma.

Posebni uslovi koji se primjenjuju na Odjeljak II

1. Osiguranik ne može dati ili učiniti nikakvo priznanje, ponudu, obećanje, plaćanje ili naknadu bez pismene saglasnosti osiguravača koji ima pravo da, ukoliko to želi, preuzme i vodi u ime osiguranika odbranu ili rješavanje bilo kakvog zahtjeva ili da sudski potražuje za svoj račun i u ime osiguranika bilo kakvu naknadu ili odštetu i ima puna ovlašćenja u vođenju bilo kakvih sudskih postupaka ili u rješavanju bilo kakvog zahtjeva, a osiguranik je obavezan da obezbijedi sve informacije i pruži pomoć koju osiguravač zahtijeva.

2. Osiguravač može da u pogledu bilo kakve nezgode plati osiguraniku sumu označenu kao limiti odgovornosti po osiguranom slučaju (umanjeno za bilo koju sumu plaćenu kao naknada po tom osnovu) ili bilo kakvu manju sumu kojom se potraživanje ili potraživanja proistekla iz takvog osiguranog slučaja mogu riješiti, nakon čega osiguravač nema nikakvu dalju obavezu po pogledu tog osiguranog slučaja po ovom Odjeljku.

Odjeljak III – Gubitak buduće dobiti naručioca

Osiguravač će isplatiti naknadu iz osiguranja osiguraniku koji je označen kao Naručilac u Tabelarnom prilogu polise izdate po ovim uslovima u pogledu gubitka bruto dobiti koju stvarno pretrpi usljed smanjenja u obimu poslovanja i povećanim troškovima rada, kako je definisano u ovom odjeljku, ako bilo kada u toku perioda osiguranja utvrđenom u Tabelarnom prilogu polise izdate po ovim uslovima osigurani radovi ili bilo koji njihov dio pretrpe štetu koja je pokrivena po Odjeljku 1 ovih uslova, izuzev ako je izričito isključena ovim odjeljkom, uzrokujući time uticaj na građevinske radove što ima posljedicu kašnjenje u započinjanju i/ili uticaj na osigurane poslove, (u daljem tekstu označeno kao kašnjenje).

Iznos koji se plaća po ovom osnovu na ime naknade iz osiguranja će biti:
- u pogledu bruto dobiti: suma koja se dobija primjenom stope bruto dobiti na iznos za koji je stvarni obim poslovanja umanjen, a koji bi se postigao da kašnjenje nije nastalo
- u pogledu povećanih troškova poslovanja: dodatni troškovi koji su neophodni i opravdani isključivo za svrhu izbjegavanja ili minimiziranja umanjenja u obimu poslovanja koji bi, bez takvih troškova, nastali za vrijeme perioda odgovornosti, ali koji ne prelaze sumu koja se dobija primjenom stope bruto dobiti na iznos smanjenja u obimu poslovanja koji se time izbjegava.

Ako je godišnja suma osiguranja manja nego suma koja se dobija primjenom stope bruto dobiti na godišnji obim poslovanja, tada će naknada iz osiguranja koja se plaća biti proporcionalno umanjena.

GEORGIOS KARKANTIAS
PRESIDENT

03/12/18

Definicije

Period osiguranja

Period osiguranja je onaj period koji je naveden u Tabelarnom prilogu polise izdate po ovim uslovima i završava se na dan naveden u Tabelarnom prilogu polise ili bilo kada ranije ukoliko osiguranje za materijalne štete po Odeljku 1 ovih uslova prestane.

Planirani datum početka osiguranog posla

Datum naveden u Tabelarnom prilogu polise izdate po ovim uslovima ili naknadno izmijenjen datum kada je posao trebalo da počne da se nije desilo kašnjenje.

Period odgovornosti

Period u kome na rezultate poslovanja utiču posledice kašnjenja, koji počinje na utvrđeni datum početka osiguranog posla i koji ne prelazi maksimalni period naveden u Tabelarnom prilogu uz ovaj odjeljak.

Vremenska franšiza

Period naveden u Tabelarnom prilogu uz ovaj odjeljak za koji osiguravač nije odgovoran. Odgovarajući iznos će biti obračunat množenjem prosječne dnevne vrijednosti štete koja se trpi za vrijeme Perioda odgovornosti sa brojem dana koji su određeni kao vremenska franšiza.

Promet

Novčani iznos (umanjen za odobrene popuste) koji je plaćen ili plativ osiguraniku za najam prostora ili druge usluge pružene tokom obavljanja osiguranog posla u poslovnim prostorijama.

Godišnji promet

Promet koji bi, da do odlaganja nije došlo, bio postignut u toku 12 mjeseci od planiranog dana otpočinjanja osiguranog posla.

Godišnja bruto dobit

Iznos za koji vrijednost godišnjeg prometa premašuje iznos specificiranih troškova poslovanja.

Specificirani troškovi poslovanja su bilo koji varijabilni troškovi, npr. troškovi u vezi kupovine roba, materijala kao i troškovi za nabavke i usluge (izuzev ako su potrebni za održavanje poslovanja) i bilo koji troškovi na ime poreza na promet, poreza na nabavku, licenci, naknada i sl. u mjeri u kojoj su takvi troškovi zavisni od prometa.

Stopa bruto dobiti

Stopa koja bi, da se nije desilo kašnjenje, bila ostvarena na promet ostvaren u periodu odgovornosti.

Posebna isključenja po Odjeljku 3

Osiguravač nije odgovoran za:

1. Gubitak bruto dobiti i /ili povećane troškove poslovanja zbog bilo kakvog kašnjenja uzrokovanog ili nastalog usljed:

1.1. štete pokrivene po Odjeljku 1 putem priloga (endorsmenta) ukoliko to nije posebno ugovoreno u pismenoj formi,
1.2. zemljotresa, vulkanske erupcije, cunamija, ukoliko to nije posebno ugovoreno u pismenoj formi,
1.3. štete na okolnoj imovini, opremi i mehanizaciji za izvođenje radova,
1.4. štete na potrošnim sredstvima i sirovinama, manjka, uništenja, pogoršanja na bilo kojim materijalima neophodnim za osigurani posao,
1.5. bilo kakvih zabrana koje nametnu javne vlasti,
1.6. nedostupnosti fondova,

GEORGIOS KARKANIAS
PRESIDENT

03/12/18

1.7. izmjena, dodataka, poboljšavanja, ispravki, oštećenja ili grešaka ili uklanjanja nedostataka nastalih poslije štetnog događaja,
1.8. štete na predmetima preuzetim ili stavljenim u upotrebu od strane osiguranika za koje je pokriće po Odeljku 1 polise izdate po ovim uslovima prestalo;

2. bilo koje štete usljed ugovornih kazni ili naknada za povredu ugovora, kašnjenje ili neizvršenje porudžbina, ili za kazne bilo koje vrste;

3. gubitka posla usljed razloga kao što su obustava, istek ili otkaz zakupa, licence ili porudžbine i dr. koji se desi poslije dana stvarnog početka posla;

4. šteta na građevinskim radovima koji imaju prirodu prototipa, ukoliko nije posebno ugovoreno putem priloga;

Odredbe koje se primjenjuju na Odjeljak 3

Memo 1 – Produženje perioda

Bilo koje produženje perioda osiguranja po Odjeljku 1 ovih uslova ne vodi automatski produženju perioda osiguranja navedenom u Tabelarnom prilogu uz ovaj odjeljak.

Bilo koje produženje perioda osiguranja po ovom Odjeljku osiguranik mora tražiti čim je u mogućnosti, navodeći okolnosti koje su dovele do potrebe za produženjem, a takvo produženje će imati djejstvo na ovaj odjeljak samo ako je posebno ugovoreno u pismenoj formi.

Bilo koja izmjena ugovorenog datuma otpočinjanja osiguranog posla će biti prijavljena u pismenoj formi i imaće djejstvo na ovaj Odjeljak samo ako je posebno ugovorena u pismenoj formi.

Memo 2 – Osnove za likvidaciju šteta

Pri obračunu stope bruto dobiti i godišnjeg prometa, sljedeće stavke će posebno biti uzete u obzir:

a) rezultati osiguranog posla u periodu od 12 mjeseci poslije otpočinjanja;

b) izmjene ili posebne okolnosti koje bi imale uticaja na osigurani posao da se kašnjenje nije desilo;

c) izmjene i posebne okolnosti od uticaja na osigurani posao nakon otpočinjanja;

tako da konačni iznosi predstavljaju, što je bliže moguće, razumno ostvarive rezultate koji bi bili postignuti obavljanjem osiguranog posla posle ugovorenog datuma da se kašnjenje nije desilo

Memo 3 – Povraćaj premije

Ako osiguranik dokaže (uz potvrdu osiguranikovog revizora) da je bruto dobit za vrijeme obračunskog perioda od 12 mjeseci poslije početka osiguranog posla ili datuma na koji je trebalo, ali zbog kašnjenja osigurani posao nije otpočeo, bila manja od sume na koju je izvršeno osiguranje, tada će biti izvršen povraćaj premija pro-rata, najviše do iznosa trećine plaćene premije, na ime takve razlike.

U slučaju nastanka štete po osnovu koje osiguranik ima pravo na zahtjev po osnovu ovih uslova, povraćaj će biti izvršen samo za onaj dio gore navedene razlike koji se ne duguje po osnovu takve štete.

Posebni uslovi koji se primjenjuju na Odjeljak 3

1. Osiguranik je obavezan da osiguravaču dostavi ažurirane izvještaje u periodima navedenim u Tabelarnom prilogu uz ovaj odjeljak.
2. U slučaju bilo kakve izmjene u originalnom riziku kao što su:
   - izmjene u utvrđenom dinamičkom planu,
   - izmjene, modifikacije ili dodaci bilo kojoj stavci radova,
   - napuštanje propisanih građevinskih metoda,
   - izmjene u osiguranikovom poslovanju (kao što je prekid u poslovanju, likvidacija ili prinudna uprava),

GEORGIOS KARKANIAS
PRESIDENT

03/12/18

polisa izdata po ovim uslovima će se smatrati raskinutom dok njen nastavak ne bude pismeno potvrđen od strane osiguravača

3. U slučaju bilo kog događaja koji može uzrokovati kašnjenje i dati osnov za zahtjev po ovom odjeljku:

   a) osiguranik je obavezan da odmah obavijesti osiguravača telefonom ili telegramom i da pismeno potvrdi obavještenje u roku od 48 sati od događaja;
   b) osiguranik će preduzeti i dozvoliti da se preduzmu sve aktivnosti koje su razumno ostvarive u cilju smanjenja ili ustanovljenja obima uticaja na građevinske radove i u cilju sprečavanja ili minimiziranja kašnjenja koje usljed toga nastane;
   c) osiguravač i bilo koje lice koje ovlasti osiguravač će, bez obaveza prema bilo kojoj strani osiguranoj ovim uslovima, imati pristup mjestu izvođenja radova gdje se dogodila šteta u cilju direktnih pregovora sa odgovornim izvođačem ili podizvođačem radi ustanovljenja mogućih uzroka i obima štete, njenih uticaja na osigurane rizike, ispitivanja mogućnosti za smanjenja kašnjenja planiranog početka osiguranog posla i, ako je neophodno, radi davanja razumnih preporuka za izbjegavanje ili smanjenje takvog kašnjenja.

   Ovaj uslov će biti dokaz o saglasnosti i ovlašćenje osiguranika da osiguravač može to učiniti. Ako osiguranik ili drugo lice koje djeluje u njegovo ime sprečava ili otežava osiguravača za vrijeme gore navedenih aktivnosti ili ne ispunjava takve preporuke osiguravača, osiguranik će izgubiti sva prava po ovom odjeljku.

4. U slučaju zahtjeva po ovom Odjeljku, osiguranik će o svom trošku dostaviti osiguravaču najkasnije u roku od 30 dana od kašnjenja, ili u toku naknadnog perioda ukoliko ga osiguravač odobri u pismenoj formi, pismenu izjavu navodeći detalje svog zahtjeva. Pored toga, osiguranik će o svom trošku obezbijediti i dostaviti osiguravaču knjigovodstvene dokumente i poslovne knjige npr. račune, bilanse i druge dokumente, dokaze, informacije, objašnjenja ili druge dokaze koje osiguravač ima pravo da zahtijeva u razumnoj mjeri u cilju istraživanja i provjeravanja zahtjeva zajedno sa, ako osiguravač to traži, ovjerenom izjavom o istinitosti zahtjeva i stvari povezanih sa zahtjevom.

5. Naknada iz osiguranja dospijeva za naplatu mjesec dana po konačnom utvrđivanju iznosa naknade. Bez obzira na gore navedeno osiguranik može, mjesec dana nakon što je osiguravač na propisan način obaviješten i pošto je priznao odgovornost, zahtijevati na ime avansa isplatu iznosa koji je plativ na osnovu nesumnjivih okolnosti.

   Osiguravač je ovlašćen da odloži isplatu naknade iz osiguranja

   a) ako postoji sumnja u pravo osiguranika da primi naknadu, dok se neophodni dokazi ne dostave
   b) ako, kao rezultat štete ili kašnjenja planiranog početka osiguranog posla policija ili istražni organi pokrenu istragu, do okončanja takve istrage

Osiguravač nije obavezan da plati kamatu ili naknadu za neisplaćeni iznos osim zatezne kamate

Opšte odredbe

Sastavni dio ovih Posebnih uslova su i dolje navedeni Prilozi, kojima se u zavisnosti od vrste radova, načina izvođenja, prirodnih ili bilo kojih drugih okolnosti i uslova (koji se odnose ili utiču na izvođenje radova), vrše dopune, proširenja, suženja, isključenja ili druge izmjene ovih Posebnih uslova.

GEORGIOS KARKANIAS
PRESIDENT

03/12/18

Prilozi:

001	Pokriće za štete prouzrokovane štrajkovima, pobunama i građanskim nemirima
002	Pokriće za uzajamnu odgovornost
003	Osnovno pokriće u periodu održavanja
004	Prošireno pokriće u periodu održavanja
005	Posebni uslovi za dinamički plan izgradnje i/ili montaže
006	Pokriće za dodatne troškove za prekomjerni rad, noćni rad, rad u dane državnih praznika i ekspresni prevoz
007	Pokriće za dodatne troškove avionskog prevoza
008	Pokriće za građevine u zonama zemljotresa
009	Isključenje pokrića za štetu ili odgovornost usljed zemljotresa
010	Isključenje pokrića za štetu ili odgovornost usljed poplave i izlivanja
012	Isključenje pokriča za štetu ili odgovornost usljed oluje ili šteta prouzrokovanih vodom usljed oluje
013	Imovina u skladištima van mjesta izvođenja radova
014	Isključenje pokrića za štetu ili odgovornost usljed terorizma
100	Pokriće za testiranje mašina i instalacija
101	Posebni uslovi za izgradnju tunela, galerija, privremenih ili trajnih podzemnih građevina ili instalacija
102	Posebni uslovi za podzemne kablove, cijevi i druge instalacije
103	Isključenje pokrića za štete na usjevima, šumama i kulturama
104	Posebni uslovi za izgradnju brana i rezervoara za vodu
106	Pokriće za dionice
107	Pokriće za kampove i skladišta
108	Pokriće za građevinsku opremu i mehanizaciju
109	Pokriće za građevinski materijal
110	Posebni uslovi u pogledu bezbjednosnih mjera koje se odnose na padavine, poplave i izlivanje
111	Posebni uslovi za uklanjanje ruševina sa klizišta
112	Posebni uslovi u pogledu protivpožarnih uređaja i protivpožarnih mjera na gradilištima
113	Kopneni transport
114	Serijske štete
115	Pokriće za rizik projektovanja
116	Pokriće za osigurane ugovorene radove koji su preuzeti ili stavljeni u upotrebu
117	Posebni uslovi za postavljanje vodovoda i kanalizacije
118	Bušenje za izvorišta vode
119	Postojeća imovina ili imovina koja pripada ili je u državini, pod nadzorom ili kontrolom osiguranika
120	Vibracije, uklanjanje ili slabljenje potpora, oslonca ili nosećih konstrukcija
121	Posebni uslovi za pobijanje šipova i radove na potpornim zidovima
200	Rat i Terorizam
201	Isključenje rizika radioaktivne kontaminacije, hemijskog, biološkog, biohemijskog
	I elektromagnetnog oružja
202	Elektronski podaci
203	Isključenje političkih rizika, finansijskih garancija i kreditnih rizika
204	Industrije,curenje, zagađenje i kontaminacija
205	Isključenje rizika od azbesta
206	Isključenje odgovornosti za rizik od ograničenog neispravnog stanja (DE 3)
207	Isključenje rizika od unapređenja projekta (DE 5)
208	Rizici u vezi sa vodom
209	72 časa
210	Podjela 50/50
211	Automatsko ponovno pokriće do sume osiguranja
212	Planovi i dokumenta
213	Profesionalne naknade
214	Državni organi
215	Privremene popravke

GEORGIOS KARKANIAS
PRESIDENT

03/12/18

216	Uklanjanje ostataka
217	Minimizacija štete
218	Ograničenje i isključivanje sankcija
219	Klauzula o eskalaciji

GEORGIOS KARKANIAS
PRESIDENT

03/12/18

Tabelarni prilog polise (schedule)

Naziv i adresa osiguranika	**Naziv ugovora** **Mjesto izvođenja radova**

Odjeljak I – Materijalna šteta		
Predmet osiguranja	**Suma osiguranja**	**Franšiza**
1. Ugovoreni radovi (trajni i privremeni radovi uključujući sve materijale koji treba da budu ugrađeni) 1.1 Ugovorena cijena 1.2 Materijali i predmeti koje isporučuje naručilac 2. Oprema i mehanizacija za izvođenje radova 3. Uklanjanje ruševina		

Ukupna suma osiguranja po Odjeljku I	

Rizik	**Limit odgovornosti ***	**Franšize**
Zemljotres, vulkanska erupcija, cunami Oluja, uragan, poplava, izlivanje, klizanje tla		

*** Limit odgovornosti po svakoj pojedinačnoj šteti ili seriji šteta koje proističu iz jednog osiguranog slučaja**

GEORGIOS KARKANIAS
PRESIDENT

03/12/18

Odjeljak II – Odgovornost za štete pričinjene trećim licima		
Predmet osiguranja	**Limit odgovornosti ****	**Franšize**
1. Tjelesne povrede 1.1 po jednom licu 1.2 ukupno 2. Imovinske štete		

** **Limit odgovornosti po jednom slučaju ili seriji slučajeva koji proističu iz jednog događaja**

Odjeljak III – Gubitak buduće dobiti naručioca		
Osigurani interes	**Godišnja osigurana suma**	**Suma osiguranja za maksimalni period naknade**
Ukupan profit i povećane cijene rada		

Period osiguranja		Maksimalni period naknade		Vremenska franšiza	Rok za prijavu
Od	Do***		Od****		
		mjeseci			mjeseci

*** **Planirani datum završetka gradnje**

**** **Planirani datum početka osiguranog posla, koji ne može biti prije planiranog datuma završetka gradnje**

Period osiguranja
(prema odredbama koje se odnose na period pokrića)

Od do uključujući sedmica testiranja

Upitnik i ponuda br. _____ čine sastavni dio ove polise
Sljedeći prilozi su dodati i čine sastavni dio ove polise:

Ukupna premija (uključujući dodatne premije po gore navedenim prilozima)	**ZA OSIGURAVAČA** **Dana**

GEORGIOS KARKANTAS
PRESIDENT

13

03/12/18

Prilog 001 – Pokriće za štete prouzrokovane štrajkovima, pobunama i građanskim nemirima

Ugovoreno je i podrazumijeva se da će, nasuprot rokovima, isključenjima, odredbama i uslovima sadržanim u polisi ili prilozima uz polisu i pod uslovom da je osiguranik platio ugovorenu dodatnu premiju osiguranje biti prošireno tako da pokriva štetu nastalu usljed štrajka, pobune i građanskih nemira, što će za potrebe ovog priloga značiti (uvijek pod Posebnim uslovima koji su navedeni u daljem tekstu) gubitak ili oštećenje osigurane imovine koji su neposredno prouzrokovani:

1. radnjama lica koje učestvuje sa drugim licima u bilo kakvom remećenju javnog mira (bilo u vezi sa štrajkom ili prisilnim zatvaranjem poslovnog prostora ili ne) koje ne spadaju pod uslov 2 dolje navedenih Posebnih uslova,
2. djelovanjem zakonski konstituisane vlasti prilikom suzbijanja ili pokušaja suzbijanja takvog ometanja ili prilikom ublažavanja posljedica takvog ometanja,
3. voljnim činom nekog štrajkača ili radnika zatvorenog u poslovnom prostoru sa ciljem nastavljanja štrajka ili pružanja otpora prisilnom zatvaranju poslovnog prostora od strane poslodavca,
4. djelovanjem zakonski konstituisane vlasti prilikom sprečavanja ili pokušaja sprečavanja nekog takvog čina ili prilikom ublažavanja posljedica nekog takvog čina.

S tim što je izričito ugovoreno i potvrđuje se da:

1. svi rokovi, isključenja, odredbe i uslovi ove Polise važe u svakom pogledu za osiguranje izdato ovim proširenjem, osim ukoliko isti nisu izričito izmijenjeni sljedećim Posebnim uslovima, a svako pominjanje gubitka ili štete u tekstu ove Polise podrazumijevaće opasnosti koje su ovim osigurane,
2. Sljedeći Posebni uslovi važiće samo za osiguranje izdato ovim proširenjem, a tekst polise odnosiće se u svakom pogledu na osiguranje dato polisom kao da ovaj Prilog nije dodat.

Posebni uslovi

1 Ovo osiguranje ne pokriva:

a) štetu nastalu kao posljedica potpune ili djelimične obustave rada ili ometanja, prekida ili obustave nekog procesa ili aktivnosti,

b) štetu prouzrokovanu trajnim ili privremenim oduzimanjem imovine koje je posljedica konfiskacije, plenidbe ili rekvizicije od strane zakonski konstituisane vlasti,

c) štetu prouzrokovanu trajnim ili privremenim oduzimanjem bilo kog objekta koje je posljedica nezakonitog zauzimanja tog objekta od strane nekog lica,

d) posljedičnu štetu ili odgovornost bilo koje vrste, bilo kakvu isplatu koja premašuje ovdje ugovorenu naknadu za materijalnu štetu koje se ovim pokriva

s tim što osiguravač nije oslobođen odgovornosti, po gore navedenim tačkama b) i c), prema osiguraniku u pogledu fizičkog oštećenja osigurane imovine koje se dogodilo prije oduzimanja ili tokom privremenog oduzimanja imovine.

GEORGIOS KARKANIAS PRESIDENT

03/12/18

2 Ovo osiguranje ne pokriva štete koje su prouzrokovane ili su nastale kao posljedica, neposredno ili posredno, nekog od sljedećih događaja, i to:

a) rata, invazije, djelovanja stranog neprijatelja, neprijateljstva ili ratne operacije (bilo da je rat zvanično objavljen ili ne), građanskog rata;

b) bune, građanskih nemira koji se šire ili dostižu razmjere narodnog ustanka, vojnog ustanka, ustanka, pobune, revolucije, vojne ili uzurpirane vlasti,

c) bilo kakvog čina lica koje djeluje u korist ili u vezi sa nekom organizacijom čije su djelatnosti usmjerene ka nasilnom zbacivanju vlade de jure ili de facto ili ka vršenju uticaja na vladu putem terorizma ili nasilja.

U bilo kom sporu, sudskom ili nekom drugom postupku u kome osiguravač tvrdi da obzirom na odredbe ovih uslova šteta nije pokrivena osiguranjem, teret dokazivanja da je takva šteta pokrivena snosi osiguranik.

3 Osiguravač može u bilo kom trenutku raskinuti ovo osiguranje obavijestivši u tom smislu osiguranika preporučenom poštanskom pošiljkom poslatom na posljednju poznatu adresu osiguranika, u kom slučaju je osiguravač obavezan da izvrši povraćaj srazmernog dijela premije za period od datuma raskida do isteka perioda osiguranja.

4 Podrazumijeva se da je limit odgovornosti po bilo kom osiguranom slučaju kao što je dolje navedeno ograničen na naknadu za štete pokrivene ovim Prilogom tokom neprekidnog perioda od 168 sati.

Ukupni limit odgovornosti osiguravača tokom perioda osiguranja po osim uslovima je ograničen na dvostruki iznos limita odgovornosti po jednom osiguranom slučaju.

Limit odgovornosti: **po jednom osiguranom slučaju**

Franšiza: **po jednom osiguranom slučaju**

Dodatna premija:

GEORGIOS KARKANIAS
PRESIDENT

03/12/18

Prilog 002 – Pokriće za uzajamnu odgovornost

Ugovoreno je i podrazumijeva se da će, nasuprot rokovima, isključenjima, odredbama i uslovima sadržanim u polisi ili prilozima uz polisu i pod uslovom da je osiguranik platio ugovorenu dodatnu premiju, pokriće za odgovornost za štete pričinjene trećim licima po polisi osiguranja biti primijenjeno na osiguranike navedene u tabelarnom prilogu polise (schedule) kao da je posebna polisa izdata za svakog osiguranika, s tim što osiguravač nije o obavezi da osiguraniku isplati naknadu po ovom Prilogu u pogledu odgovornosti za

- štete na stavkama koje su osigurane ili su se mogle osigurati po Odjeljku I Posebnih uslova za osiguranje objekata u izgradnji protiv svih rizika, čak i ako nijesu plativi zbog prekoračenja limita,
- smrti, povrede ili bolesti zaposlenih ili radnika koji su osigurani ili su mogli biti osigurani po osnovu osiguranja zaposlenih od posljedica nesrećnog slučaja ili po osnovu osiguranja od odgovornosti poslodavca.

Ukupna obaveza osiguravača prema osiguranim stranama ne može premašiti u ukupnom iznosu, po jednoj nezgodi, za više nezgoda ili serije nezgoda proisteklih iz jednog događaja limit odgovornosti naveden u tabelarnom prilogu polise (schedule).

Dodatna premija:

GEORGIOS KARKANIAS
PRESIDENT

03/12/18

Prilog 003 – Osnovno pokriće u periodu održavanja

Ugovoreno je i podrazumijeva se da će, nasuprot rokovima, isključenjima, odredbama i uslovima sadržanim u polisi ili prilozima uz polisu i pod uslovom da je osiguranik platio ugovorenu dodatnu premiju osiguranje biti produženo na period održavanja koji je posebno naveden tako da će pokrivati isključivo štete na ugovorenim radovima koje prouzrokuje osigurani izvođač tokom vršenja radnji u cilju ispunjavanja obaveza po osnovu ugovornih odredbi koje se odnose na održavanje.

Pokriće u periodu održavanja od **do**

Dodatna premija

GEORGIOS KARKANIAS
PRESIDENT

03/12/18

Prilog 004 – Prošireno pokriće u periodu održavanja

Ugovoreno je i podrazumijeva se da će, nasuprot rokovima, isključenjima, odredbama i uslovima sadržanim u polisi ili prilozima uz polisu i pod uslovom da je osiguranik platio ugovorenu dodatnu premiju osiguranje biti produženo na period održavanja koji je posebno naveden tako da će pokrivati štete na ugovorenim radovima:

- koje prouzrokuje osigurani izvođač radova tokom vršenja radnji u cilju ispunjavanja obaveza po osnovu ugovornih odredbi koje se odnose na održavanje.
- nastale za vrijeme perioda održavanja pod uslovom da su takve štete prouzrokovane na mjestu izvođenja radova tokom perioda izgradnje prije izdavanja potvrde o završetku radova za uništeni ili oštećeni dio radova.

Pokriće u periodu održavanja od **do**

Dodatna premija

GEORGIOS KARKANIAS
PRESIDENT

03/12/18

Prilog 005 – Posebni uslovi za dinamički plan izgradnje i/ili montaže

Ugovoreno je i podrazumijeva se da će, nasuprot rokovima, isključenjima, odredbama i uslovima sadržanim u polisi ili prilozima uz polisu, sljedeće odredbe biti primijenjene na osiguranje:

Dinamički plan izgradnje i/ili montaže, zajedno sa drugim pismenim izjavama osiguranika datim u svrhu dobijanja pokrića po ovim uslovima, kao i tehničkim podacima koje je dostavio osiguravaču, smatra se sastavnim dijelom polise osiguranja.

Osiguravač nije obavezan da osiguraniku plati naknadu iz osiguranja za štete prouzrokovane, proistekle ili pogoršane usljed odstupanja od dinamičkog plana izgradnje i/ili montaže koji premašuje ugovoreni broj sedmica odstupanja, ukoliko se osiguravači nijesu pismeno saglasili sa takvim odstupanjem prije nastanka štete.

Odstupanje od dinamičkog plana: **sedmica**

GEORGIOS KANKANTAS PRESIDENT

03/12/18

Prilog 006 – Pokriće za dodatne troškove za prekovremeni rad, noćni rad, rad u dane državnih praznika i ekspresni prevoz

Ugovoreno je i podrazumijeva se da će, nasuprot rokovima, isključenjima, odredbama i uslovima sadržanim u polisi ili prilozima uz polisu i pod uslovom da je osiguranik platio ugovorenu dodatnu premiju osiguranje biti prošireno tako da pokriva dodatne troškove za prekovremeni rad, noćni rad, rad u dane državnih praznika i ekspresni prevoz (isključujući avionski prevoz), uvijek pod uslovom da su takvi dodatni troškovi nastali u vezi sa nekom štetom na osiguranim stavkama pokrivenim polisom osiguranja.

Ako je osigurana suma oštećenog predmeta manja od iznosa na koji je trebalo izvršiti osiguranje, tada će naknada plativa po ovom prilogu za takve dodatne troškove biti umanjena u istoj srazmjeri.

Limit odgovornosti: **po jednom osiguranom slučaju**

Dodatna premija:

GEORGIOS KARKANIAS
PRESIDENT

03/12/18

Prilog 007 – Pokriće za dodatne troškove avionskog prevoza

Ugovoreno je i podrazumijeva se da će, nasuprot rokovima, isključenjima, odredbama i uslovima sadržanim u polisi ili prilozima uz polisu i pod uslovom da je osiguranik platio ugovorenu dodatnu premiju osiguranje biti prošireno tako da pokriva dodatne troškove za avionski prevoz,–uvijek pod uslovom da su takvi dodatni troškovi nastali u vezi sa nekom štetom na osiguranim stavkama pokrivenim polisom osiguranja, kao i pod uslovom da naknada plativa po ovom prilogu neće premašiti iznos od _____, tokom perioda osiguranja.

Franžiza: 20% od iznosa plativih dodatnih troškova, minimum po jednom osiguranom slučaju

Maksimalni iznos naknade:

Dodatna premija:

GEORGIOS KARKANIAS PRESIDENT

03/12/18

Prilog 008 – Pokriće za građevine u zonama zemljotresa

Ugovoreno je i podrazumijeva se da će, nasuprot rokovima, isključenjima, odredbama i uslovima sadržanim u polisi ili prilozima uz polisu, osiguravač biti u obavezi da isplati osiguraniku naknadu iz osiguranja samo za štetu ili odgovornost prouzrokovanu zemljotresom ukoliko osiguranik dokaže da je prilikom projektovanja uzeo u obzir rizik od zemljotresa prema zvaničnim građevinskim normativima koji važe za tu lokaciju i da se pridržavao kvaliteta materijala i izrade i dimenzija na osnovu kojih su načinjeni takvi proračuni.

GEORGIOS KARKANIAS
PRESIDENT

03/12/18

Prilog 009 – Isključenje pokrića za štetu ili odgovornost usljed zemljotresa

Ugovoreno je i podrazumijeva se da, nasuprot rokovima, isključenjima, odredbama i uslovima sadržanim u polisi ili prilozima uz polisu, osiguravač nije u obavezi da osiguraniku plati naknadu za štetu ili odgovornost neposredno ili posredno nastalu usljed zemljotresa.

GEORGIOS KARKANTIAS
PRESIDENT

03/12/18

Prilog 010 – Isključenje pokrića za štetu ili odgovornost usljed poplave i izlivanja

Ugovoreno je i podrazumijeva se da, nasuprot rokovima, isključenjima, odredbama i uslovima sadržanim u polisi ili prilozima uz polisu, osiguravač nije u obavezi da osiguraniku plati naknadu za štetu ili odgovornost neposredno ili posredno nastalu usljed poplave ili izlivanja.

GEORGIOS KARKANIAS
PRESIDENT

03/12/18

Prilog 012 – Isključenje pokrića za štetu ili odgovornost usljed oluje ili šteta prouzrokovanih vodom usljed oluje

Ugovoreno je i podrazumijeva se da, nasuprot rokovima, isključenjima, odredbama i uslovima sadržanim u polisi ili prilozima uz polisu, osiguravač nije u obavezi da osiguraniku plati naknadu za štetu ili odgovornost neposredno ili posredno nastalu usljed oluje koja je jednaka ili premašuje 8 stepeni po Boforovoj skali (odnosno brzinu vjetra od 62 km/h) ili bilo koju štetu prouzrokovanu vodom koja se desila u vezi ili kao posljedica takve oluje.

PRESIDENT

03/12/18

Prilog 013 – Imovina u skladištima van mjesta izvođenja radova

Ugovoreno je i podrazumijeva se da će, nasuprot rokovima, isključenjima, odredbama i uslovima sadržanim u polisi ili prilozima uz polisu i pod uslovom da je osiguranik platio ugovorenu dodatnu premiju osiguranje biti prošireno tako da pokriva štetu na osiguranoj imovini (osim na imovini koja je proizvedena, prerađena ili uskladištena u prostorijama proizvođača, distributera ili dobavljača) u skladištu izvan mjesta izgradnje unutar teritorijalnih granica kako je navedeno dolje.

Osiguravači nijesu obavezni da osiguraniku plate naknadu iz osiguranja za štetu do koje je došlo zbog neprimjenjivanja uobičajenih mjera za sprečavanje šteta u magacinima ili skladištima. Takve mjere posebno uključuju sljedeće:

- skladišni prostor obavezno mora biti ograđen (bilo u zgradi ili bar ogradom), čuvan, zaštićen od požara, u skladu sa odgovarajućom lokacijom i vrstom uskladištene imovine;
- djelovi skladišta moraju biti razdvojeni protivpožarnim zidovima ili na međusobnoj udaljenosti od najmanje 50 metara;
- djelovi skladišta moraju biti smješteni i izgrađeni na način kojim se sprečava šteta koja nastaje akumuliranjem vode ili poplavama prouzrokovanim kišom, koje se statistički ponavljaju u periodu kraćem od 20 godina;
- ograničavanje vrijednosti po skladišnoj jedinici.

Teritorijalne granice:

Maksimalna vrijednost po skladišnoj jedinici:

Limit odgovornosti (po jednom osiguranom slučaju):

Franšiza: **% od iznosa štete po jednom osiguranom slučaju**

Dodatna premija:

GEORGIOS KARKANTAS
PRESIDENT

03/12/18

Prilog 014 – Isključenje pokrića za štetu ili odgovornost usljed terorizma

Ugovoreno je i podrazumijeva se da, nasuprot rokovima, isključenjima, odredbama i uslovima sadržanim u polisi ili prilozima uz polisu, osiguravač nije u obavezi da osiguraniku plati naknadu za štetu ili odgovornost neposredno ili posredno nastalu usljed terorizma.

Teroristički akt, za potrebe ovog priloga, označava akt koji uključuje ali nije ograničen na upotrebu sile ili nasilja i/ili prijetnje, od strane bilo kog lica ili grupe(a) lica, bilo da ono djeluje samo ili u ime ili u vezi sa nekom(im) organizacijom(jama) ili vladom(dama), posvećenoj(im) političkim, religioznim, ideološkim ili etničkim ciljevima ili razlozima koji uključuju namjeru da se na neku vladu izvrši uticaj i/ili da se zastraši javnost ili bilo koji dio javnosti.

Ovaj prilog takođe isključuje štete ili troškove bilo koje prirode koji su neposredno i posredno prouzrokovani ili su nastali kao posljedica bilo koje radnje sprovedene u cilju kontrole, sprečavanja i suzbijanja terorizma ili na bilo koji način povezane sa nekim terorističkim činom.

Prilikom bilo kog spora, sudskog ili nekog drugog postupka u kome osiguravači tvrde da prema odredbama ovog priloga neki gubitak, razaranje, šteta ili odgovornost nijesu pokriveni ovim osiguranjem teret dokazivanja da je takav gubitak, razaranje, šteta ili odgovornost pokrivena osiguranjem snosi osiguranik.

GEORGIOS KARRANTAS
PRESIDENT

03/12/18

Prilog 100 – Pokriće za testiranje mašina i instalacija

Ugovoreno je i podrazumijeva se da će, nasuprot rokovima, isključenjima, odredbama i uslovima sadržanim u polisi ili prilozima uz polisu i pod uslovom da je osiguranik platio ugovorenu dodatnu premiju osiguranje biti produženo na period testiranja ili testiranja opterećenja, ali ne duže od četiri nedjelje od datuma početka testiranja.

Ako se, međutim, dio nekog postrojenja ili jedna (ili nekoliko) mašina provjerava(ju) i/ili stavlja(ju) u pogon ili preuzima(ju), pokriće za taj određeni dio postrojenja ili mašine(a) i svaka obaveza koja odatle proističe će prestati dok će se pokriće nastaviti za preostale djelove na koje se gore navedeno ne odnosi.

Ugovoreno je i podrazumijeva se da će za mašine i instalacije koji su podvrgnuti provjeri, isključenja c) i d) iz Isključenja uz Odjeljak 1 ovih posebnih uslova biti izbrisana, a važiće sljedeće isključenje:

„gubitak ili štetu usljed greške u projektu, greške u materijalu ili odlivku, loše izrade osim grešaka u izgradnji:"

U slučaju polovnih predmeta, ovo osiguranje će, međutim, prestati odmah po započinjanju testiranja.

GEORGIOS KARKANIAS
PRESIDENT

03/12/18

Prilog 101 – Posebni uslovi za izgradnju tunela, galerija, privremenih ili trajnih podzemnih građevina ili instalacija

Ugovoreno je i podrazumijeva se da, nasuprot rokovima, isključenjima, odredbama i uslovima sadržanim u polisi ili prilozima uz polisu, osiguravač nije u obavezi da osiguraniku isplati naknadu iz osiguranja za troškove nastale zbog:

- izmjena u metodi izgradnje ili usljed nepredviđenih uslova terena ili prepreka,
- mjera koje postanu neophodne radi poboljšanja ili stabilizacije tla ili zaptivanja protiv prodiranja vode, ukoliko nijesu neophodne radi vraćanja u prvobitno stanje za štete za koje postoji obaveza naknade,
- uklanjanja iskopanog materijala, ili materijala van projektovanih profila i/ili radi ispunjavanja udubljenja koja odatle proisteknu,
- odvodnjavanja ukoliko nije neophodno da bi se popravila šteta za koju postoji obaveza naknade,
- štete usljed kvara na sistemu za odvodnjavanje ako se takva šteta mogla izbjeći upotrebom rezervnih uređaja,
- napuštanja ili vraćanja u prvobitno stanje mašina za bušenje tunela,
- štete na bentonitu, suspenziji ili bilo kakvom sredstvu ili supstanci koja se koristi kao potpora prilikom iskopavanja ili kao agens za stabilizovanje tla.

U slučaju štete, za koju postoji obaveza naknade, maksimalan iznos za isplatu će biti ograničen na troškove nastale zbog vraćanja osigurane imovine u standard ili stanje koje je tehnički jednako onome koje je postojalo neposredno prije nastupanja štete, ali koji ne prelazi procenat, kako je navedeno dolje, prvobitnih prosječnih troškova izgradnje po metru u neposredno oštećenom dijelu

Maksimalni procenat koji se plaća: ___%

GEORGIOS KARKANIAS
PRESIDENT

03/12/18

Prilog 102 – Posebni uslovi za podzemne kablove, cijevi i druge instalacije

Ugovoreno je i podrazumijeva se da je, nasuprot rokovima, isključenjima, odredbama i uslovima sadržanim u polisi ili prilozima uz polisu, osiguravač u obavezi da osiguraniku isplati naknadu iz osiguranja za štete na postojećim podzemnim kablovima, cijevima i drugim podzemnim instalacijama samo ako je osiguranik, prije početka radova, ispitao sa nadležnim vlastima tačan položaj ovih kablova, cijevi i drugih podzemnih instalacija i ako je preduzeo sve neophodne mjere za izbjegavanje štete na istim.

Zahtjevi u pogledu šteta na takvim podzemnim instalacijama koje imaju isti položaj kao što je prikazano na mapama podzemnih instalacija (crtežima koji pokazuju položaj podzemnih instalacija) su plativi po odbitku franšize u visini od _____ od iznosa štete ili franšize dolje navedene pod a), koja god je veća.

Zahtjevi u pogledu šteta na takvim podzemnim instalacijama koje su netačno prikazane na mapama podzemnih instalacija su plativi po odbitku franšize dolje navedene pod b).

Naknada iz osiguranja je u svakom slučaju ograničena na troškove popravljanja takvih kablova, cijevi ili drugih podzemnih instalacija, a bilo kakva posljedična šteta i kazne isključeni su iz ovog pokrića.

Franšize: **a) _____ od iznosa štete, minimum _____ po jednom slučaju**

b)

GEORGIOS KARKANTAS
PRESIDENT

03/12/18

Prilog 103 – Isključenje pokrića za štete na usjevima, šumama i kulturama

Ugovoreno je i podrazumijeva se da, nasuprot rokovima, isključenjima, odredbama i uslovima sadržanim u polisi ili prilozima uz polisu, osiguravač nije u obavezi da osiguraniku plati naknadu za štetu ili odgovornost neposredno ili posredno prouzrokovanu usjevima, šumama i/ili bilo kakvim kulturama za vrijeme izvršenja ugovorenih radova.

GEORGIOS KARKANIAS
PRESIDENT

03/12/18

Prilog 104 – Posebni uslovi za izgradnju brana i rezervoara za vodu

Ugovoreno je i podrazumijeva se da, nasuprot rokovima, isključenjima, odredbama i uslovima sadržanim u polisi ili prilozima uz polisu, osiguravač nije u obavezi da osiguraniku isplati naknadu iz osiguranja u pogledu:

- zalivanja područja sa mekim stijenama cementom i/ili drugih dodatnih sigurnosnih mjera, čak i ako potreba za njima nastane tek tokom izgradnje,
- troškova nastalih za odvodnjavanje, čak i ako su prvobitno očekivane količine vode znatno premašene,
- šteta zbog kvara na sistemu za odvodnjavanje ako se takav kvar mogao izbjeći dovoljnim rezervnim uređajima obezbijeđenim na licu mjesta,
- troškova nastalih za dodatno zaptivanje ili zaštitu od vode i dodatna postrojenja za izbacivanje tekućih ili podzemnih voda,
- šteta usljed slijeganja tla ukoliko su prouzrokovane nedovoljnim sabijanjem,
- pukotina i curenja.

GEORGIOS KARKANIAS
PRESIDENT

03/12/18

Prilog 106 – Pokriće za dionice

Ugovoreno je i podrazumijeva se da će, nasuprot rokovima, isključenjima, odredbama i uslovima sadržanim u polisi ili prilozima uz polisu, osiguravač biti u obavezi da isplati osiguraniku naknadu iz osiguranja samo za štetu ili odgovornost neposredno ili posredno prouzrokovanu nasipima, usjecima i zasjecima, jarkovima, kanalima ili radovima na putu ako su ovi nasipi, usjeci, zasjeci, jarkovi, kanali ili radovi na putu građeni po dionicama koje u ukupnoj dužini ne prelaze dužinu navedenu dolje, bez obzira na stanje dovršenosti osiguranih radova, a nadoknada po jednom osiguranom slučaju biće ograničena na troškove popravki takvih dionica.

Maksimalna dužina dionice: **metara**

GEORGIOS KARKANIAS
PRESIDENT

03/12/18

Prilog 107 – Pokriće za kampove i skladišta

Ugovoreno je i podrazumijeva se da će, nasuprot rokovima, isključenjima, odredbama i uslovima sadržanim u polisi ili prilozima uz polisu, osiguravač biti u obavezi da isplati osiguraniku naknadu iz osiguranja samo za štetu ili odgovornost neposredno ili posredno prouzrokovanu kampovima i skladištima požarom, poplavom ili izlivanjem ako su ovi kampovi i skladišta smješteni iznad najvišeg nivoa vode evidentiranog bilo gdje na mjestu izgradnje tokom posljednjih 20 godina i ako su posebne skladišne jedinice ili udaljene jedna od druge najmanje 50 metara ili razdvojene protivpožarnim zidovima.

Takođe je ugovoreno da je osiguravač u obavezi da osiguraniku plati naknadu iz osiguranja po jednom slučaju samo do limita odgovornosti od

za kampove

za svaku posebnu skladišnu jedinicu.

GEORGIOS KARKANIAS
PRESIDENT

03/12/18

Prilog 108 – Pokriće za građevinsku opremu i mehanizaciju

Ugovoreno je i podrazumijeva se da će, nasuprot rokovima, isključenjima, odredbama i uslovima sadržanim u polisi ili prilozima uz polisu, osiguravač biti u obavezi da isplati osiguraniku naknadu iz osiguranja samo za štetu ili odgovornost neposredno ili posredno prouzrokovanu na građevinskoj opremi i mehanizaciji poplavom ili izlivanjem ako se, nakon izvođenja radova ili u slučaju bilo kakvog prekida radova, takva oprema i mehanizacija drže na mjestu koje nije bilo plavljeno u periodu od 20 godina.

GEORGIOS KARKANIAS
PRESIDENT

03/12/18

Prilog 109 – Pokriće za građevinski materijal

Ugovoreno je i podrazumijeva se da će, nasuprot rokovima, isključenjima, odredbama i uslovima sadržanim u polisi ili prilozima uz polisu, osiguravač biti u obavezi da isplati osiguraniku naknadu iz osiguranja samo za štetu ili odgovornost neposredno ili posredno prouzrokovanu na građevinskom materijalu poplavom ili izlivanjem ako takav građevinski materijal ne prelazi trodnevne potrebe, a višak materijala se čuva na mjestu koje nije bilo plavljeno u periodu od 20 godina.

GEORGIOS KARKANIAS
PRESIDENT

03/12/18

Prilog 110 – Posebni uslovi u pogledu bezbjednosnih mjera koje se odnose na padavine, poplave i izlivanje

Ugovoreno je i podrazumijeva se da će, nasuprot rokovima, isključenjima, odredbama i uslovima sadržanim u polisi ili prilozima uz polisu, osiguravač biti u obavezi da isplati osiguraniku naknadu iz osiguranja samo za štetu ili odgovornost neposredno ili posredno prouzrokovanu padavinama, poplavom ili izlivanjem samo ako su preduzete odgovarajuće sigurnosne mjere u projektovanju i izvođenju datog projekta.

Odgovarajuće sigurnosne mjere, za svrhu ovog priloga, značiće da je za padavine, poplave i izlivanje, u svakom trenutku tokom perioda osiguranja, uračunata mogućnost njihovog pojavljivanja obzirom na prethodni period od 20 godina za osiguranu lokaciju na osnovu statističkih podataka pripremljenih od strane meteoroloških službi.

Šteta ili odgovornost koji su nastali kao posljedica neblagovremenog uklanjanja prepreka (npr. pijesak, drveće) od strane osiguranika iz vodenih tokova u okviru mjesta izgradnje, bilo da u njima ima vode ili ne, radi održavanja slobodnog protoka vode, nijesu pokrivene.

GEORGIOS KARKANIAS
PRESIDENT

37

03/12/18

Prilog 111 – Posebni uslovi za uklanjanje ruševina sa klizišta

Ugovoreno je i podrazumijeva se da, nasuprot rokovima, isključenjima, odredbama i uslovima sadržanim u polisi ili prilozima uz polisu, osiguravač nije u obavezi da osiguraniku isplati naknadu iz osiguranja za:

- troškove nastale zbog uklanjanja ruševina sa klizišta koji prelaze troškove iskopavanja prvobitnog materijala sa područja pogođenog takvim klizištima

- troškove nastale zbog popravljanja erodiranih padina ili drugih nagnutih područja, ako je osiguranik propustio da preduzme potrebne mjere, ili ih nije preduzeo na vrijeme.

GEORGIOS KARKANIAS
PRESIDENT

03/12/18

Prilog 112 – Posebni uslovi u pogledu protivpožarnih uređaja i protivpožarnih mjera na gradilištima

Ugovoreno je i podrazumijeva se da će, nasuprot rokovima, isključenjima, odredbama i uslovima sadržanim u polisi ili prilozima uz polisu, osiguravač biti u obavezi da isplati osiguraniku naknadu iz osiguranja samo za štetu ili odgovornost neposredno ili posredno prouzrokovanu požarom ili eksplozijom, uvijek pod uslovom

1. Da je, obzirom na tok radova, u svakom trenutku dostupna i u funkciji odgovarajuća protivpožarna oprema i dovoljno sredstava za gašenje požara.
   Da su instalirani ispravni hidranti do nivoa ispod najvišeg trenutnog nivoa radova i da su zaptiveni privremenim poklopcima.
2. Da se kasete sa crijevima i prenosivim aparatima za gašenje požara provjeravaju u redovnim intervalima, a najmanje dvaput nedjeljno.
3. Da su prostorije sa protivpožarnim uređajima prema zahtjevima lokalnih pravila instalirane što prije nakon uklanjanja oplate.
   Da su otvori za šahtove liftova, kanali za rad i druge šupljine privremeno zatvoreni što prije, ali ne kasnije od početka opremanja.
4. Da se otpadni materijal uklanja redovno. Da su svi spratovi koji se opremaju očišćeni od zapaljivog materijala na kraju svakog radnog dana.
5. Da se sistem „dozvole za rad" primenjuje na sve izvođače koji su angažovani u „radovima na toplo" bilo koje vrste kao što su, (ali bez ograničenja na)
   - brušenje, sječenje i zavarivanje
   - korišćenje let-lampi i otvorenog plamena
   - primjena toplog bitumena,

   i bilo kojih drugih radova pri kojima se stvara toplota.
   „Rad na toplo" vrši se samo u prisustvu najmanje jednog radnika opremljenog aparatom za gašenje požara i obučenim za gašenje požara.
   Mjesto na kome se obavljaju radovi mora se pregledati jedan sat nakon završetka radova.
6. Da materijal za izgradnju ili montažu bude uskladišten po skladišnim jedinicama koje ne prelaze dolje navedenu vrijednost po jednoj jedinici. Pojedinačne skladišne jedinice moraju biti ili najmanje 50 metara udaljene jedna od druge ili odvojene protivpožarnim zidovima.
   Da svi zapaljivi materijali, a naročito sve zapaljive tečnosti i gasovi budu uskladišteni na dovoljno velikoj udaljenosti od imovine koja se gradi ili montira i od bilo kog rada na toplo.
7. Da je određen koordinator mjera bezbjednosti na gradilištu.
   Da je instaliran ispravan protipožarni sistem za uzbunjivanje i kad god je to moguće neposredna veza sa najbližom vatrogasnom jedinicom.
   Da se plan za protivpožarnu zaštitu i plan za postupanje prilikom požara primjenjuje i ažurira redovno.
   Da su zaposleni Osiguranika obučeni za protivpožarnu zaštitu i da se protivpožarne vježbe praktikuju nedeljno.
   Najbliža vatrogasna jedinica je upoznata sa gradilištem i obezijedjen je direktan dvadesetčetvoročasovni pristup
8. Gradilište je ograđeno i pristup je kontrolisan.

Vrijednost po skladišnoj jedinici:

GEORGIOS MARKANTAS
RESIDENT

03/12/18

Prilog 113 – Kopneni transport

Ugovoreno je i podrazumijeva se da će, nasuprot rokovima, isključenjima, odredbama i uslovima sadržanim u polisi ili prilozima uz polisu i pod uslovom da je osiguranik platio ugovorenu dodatnu premiju, Odjeljak I ovih posebnih uslova biti proširen tako da pokriva štete nastale na osiguranoj imovini dok je u transportu do ugovorenog mjesta izgradnje, osim vodenim putem ili vazduhom, u okviru teritorijalnih granica s tim što maksimalni iznos na koji osiguranik ima pravo po ovom prilogu ne prelazi iznos od _____ po transportu.

Ukupna vrijednost imovine:

Franšiza:

Dodatna premija:

GEORGIOS KARKANIAS
PRESIDENT

03/12/18

Prilog 114 – Serijske štete

Ugovoreno je i podrazumijeva se da će, nasuprot rokovima, isključenjima, odredbama i uslovima sadržanim u polisi ili prilozima uz polisu sljedeća odredba biti primijenjena na osiguranje:

Štete nastale usljed greške u projektu –(ukoliko je ovo pokriće uključeno posebnim prilogom), materijalu i/ili izradi koje potiču iz istog uzroka, a nastale su na građevinama, djelovima građevina, mehanizaciji ili opremi i iste su vrste, biće nadoknađene prema sljedećoj skali nakon primjene franšize za svaku štetu:

100% od iznosa prve dvije štete
80% od iznosa treće štete
60% od iznosa četvrte štete
50% od iznosa pete štete.

Dalje štete neće biti plative.

GEORGIOS KARKANTAS
PRESIDENT

03/12/18

Prilog 115 – Pokriće za rizik projektovanja

Ugovoreno je i podrazumijeva se da će, nasuprot rokovima, isključenjima, odredbama i uslovima sadržanim u polisi ili prilozima uz polisu i pod uslovom da je osiguranik platio ugovorenu dodatnu premiju isključenje pod c) u Posebnim isključenjima uz Odjeljak 1 biti izbrisano, a isključenje pod d) biti zamijenjeno sljedećim tekstom:

„d) Troškove zamjene, popravke ili ispravke štete na predmetima usljed greške u materijalu i/ili izradi i/ili greške u projektu, ali ovo isključenje će biti ograničeno na predmete koji su neposredno pogođeni i smatraće se da ono ne isključuje gubitak ili štetu na ispravno izvedenim predmetima koji su nastali zbog štete izazvane takvim lošim materijalom i/ili izradom i/ili greškom u projektu."

Dodatna premlja:

GEORGIOS KARKANIAS
PRESIDENT

03/12/18

Prilog 116 – Pokriće za osigurane ugovorene radove koji su preuzeti ili stavljeni u upotrebu

Ugovoreno je i podrazumijeva se da će, nasuprot rokovima, isključenjima, odredbama i uslovima sadržanim u polisi ili prilozima uz polisu i pod uslovom da je osiguranik platio ugovorenu dodatnu premiju osiguranje biti prošireno tako da pokriva.

- štetu na djelovima osiguranih ugovorenih radova koji su preuzeti ili stavljeni u upotrebu ako takva šteta proizlazi iz izgradnje predmeta osiguranih po osnovu Odjeljka 1 i nastupi tokom perioda osiguranja.

Dodatna premija:

GEORGIOS KARKANIAS
PRESIDENT

03/12/18

Prilog 117 – Posebni uslovi za postavljanje vodovoda i kanalizacije

Ugovoreno je i podrazumijeva se da će, nasuprot rokovima, isključenjima, odredbama i uslovima sadržanim u polisi ili prilozima uz polisu, osiguravač biti u obavezi da isplati osiguraniku naknadu iz osiguranja za štetu ili odgovornost prouzrokovanu plavljenjem ili muljem u cijevima, rovovima ili oknima samo do dolje navedene maksimalne dužine otvorenog rova, djelimično ili potpuno iskopane, po jednom osiguranom slučaju.

Osiguravač je u obavezi samo ako su:

1. cijevi, odmah nakon postavljanja, bile obezbijeđene zatrpavanjem da se ne mogu pomjeriti u slučaju plavljenja rova,
2. cijevi, odmah nakon postavljanja, bile zatvorene kako bi se spriječio prodor vode, mulja i sl.,
3. rovovi, na dionicama vodova koje su prošle provjeru, bili zatrpani odmah nakon završetka provjere pritiska.

Maksimalna dužina: **metara**

GEORGIOS KARKANIAS
PRESIDENT

03/12/18

Prilog 118 – Bušenje za izvorišta vode

Ugovoreno je i podrazumijeva se da će, nasuprot rokovima, isključenjima, odredbama i uslovima sadržanim u polisi ili prilozima uz polisu, pokriće za radove na bušenju izvorišta vode biti ograničeno štete prouzrokovane ili proistekle iz sljedećih rizika:

- zemljotresa, vulkanskih erupcija, cunamija,
- olujnih vjetrova, ciklona, poplava, izlivanja, klizišta,
- dizanja u vazduh i/ili stvaranjem kratera,
- požara/eksplozije,
- arterskih vodenih tokova,
- štete od mulja, koje se ne mogu otkloniti poznatim postupcima,
- obrušavanjem rupe uključujući rušenje podzide usl,ed nenormalnog pritiska ili bubrenjem škriljaca, koje se ne može spriječiti uobičajenim postupcima.

Naknada će biti obračunata na osnovu troškova (uključujući materijal) potrošenih za bušenje izvorišta do samog trenutka kada prva od gore navedenih opasnosti postane vidna, a izvorište mora da bude napušteno zbog neke osigurane opasnosti, s tim što će osiguranik snositi franšizu od 10% od iznosa štete, u minimalnom iznosu koji je dolje naveden po jednom slučaju.

Posebna isključenja

Osiguravač nije u obavezi da plati naknadu iz osiguranja za:

- štetu na bušotini i opremi za bušenje (za koju izvođač radova koji vrši bušenje može da zaključi posebno osiguranje),
- troškove završnih operacija svih vrsta,
- troškove vraćanja bunara u prvobitno stanje uključujući sve stimulativne radove (nagrizanje, lomljenje itd.)

Franšiza:

03/12/18

Prilog 119 – Postojeća imovina ili imovina koja pripada ili je u državini, pod nadzorom ili kontrolom osiguranika

Ugovoreno je i podrazumijeva se da će, nasuprot rokovima, isključenjima, odredbama i uslovima sadržanim u polisi ili prilozima uz polisu i pod uslovom da je osiguranik platio ugovorenu dodatnu premiju, Odjeljak I ovih posebnih uslova biti proširen tako da pokriva štete nastale na postojećoj imovini ili imovini koja pripada ili je u državini, pod nadzorom ili kontrolom osiguranika koje su prouzrokovane ili nastale izgradnjom ili montažom na predmetima osiguranim po Odjeljku 1.

Osigurana imovina:

Suma osiguranja:

Osiguravač je u obavezi da osiguraniku plati naknadu iz osiguranja za štete na osiguranoj imovini pod uslovom da je prije početka izgradnje ona bila u dobrom stanju i da su preduzete sve potrebne sigurnosne mjere.

U pogledu šteta prouzrokovanih vibracijama ili uklanjanjem ili slabljenjem potpora, oslonaca ili nosećih konstrukcija, osiguravač je u obavezi da osiguraniku plati samo naknadu za štete koje su rezultat potpunog ili delimičnog rušenja osigurane imovine, a ne za površinske štete koje ne oštećuju stabilnost osigurane imovine niti ugrožavaju njene korisnike.

Osiguravač nije u obavezi da osiguraniku plati naknadu za

- štete koje su predvidive obzirom na vrstu građevinskih radova i način izvođenja,
- Troškove sprečavanja šteta ili smanjivanje rizika nastupanja šteta koje su postale neophodne tokom perioda osiguranja.

Franšiza:

Dodatna premija:

GEORGIOS KARKANIAS
PRESIDENT

03/12/18

Prilog 120 – Vibracije, uklanjanje ili slabljenje potpora, oslonaca ili nosećih konstrukcija

Ugovoreno je i podrazumijeva se da će, nasuprot rokovima, isključenjima, odredbama i uslovima sadržanim u polisi ili prilozima uz polisu i pod uslovom da je osiguranik platio ugovorenu dodatnu premiju, Odjeljak 2 ovih posebnih uslova biti proširen tako da pokriva odgovornost usljed šteta prouzrokovanih vibracijama, uklanjanjem ili slabljenjem potpora, oslonaca ili nosećih konstrukcija

Uvijek pod uslovom da je:

osiguravač u obavezi da osiguraniku plati naknadu iz osiguranja za štetu na bilo kakvoj imovini, zemljištu ili građevini samo ako takva šteta za posljedicu ima potpuno ili djelimično rušenje,

- osiguravač je u obavezi da osiguraniku plati naknadu iz osiguranja za štetu na bilo kakvoj imovini, zemljištu ili građevini samo ako je prije početka izgradnje bila u dobrom stanju i ako su preduzete neophodne mjere za sprečavanje šteta,

- ukoliko je osiguranik na odgovarajući zahtjev, prije početka izgradnje o svom trošku, pripremio izveštaj o stanju imovine, zemljišta ili građevine koja je ugrožena.

Osiguravač nije u obavezi da osiguraniku isplati naknadu iz osiguranja u pogledu odgovornosti za:

- štetu koja se mogla predvidjeti obzirom na vrstu građevinskih radova ili način izvođenja,
- površinske štete koja ne ugrožavaju stabilnost imovine, zemljišta ili građevina, niti ugrožavaju njihove korisnike,
- troškove sprečavanja šteta ili smanjivanje rizika nastupanja šteta koje su postale neophodne tokom perioda osiguranja.

Limit odgovornosti (po jednom osiguranom slučaju)

Ukupni limit odgovornosti

Franšiza:

Dodatna premija:

GEORGIOS KARKANIAS
PRESIDENT

47

03/12/18

Prilog 121 – Posebni uslovi za pobijanje šipova i radove na potpornim zidovima

Ugovoreno je i podrazumijeva se da, nasuprot rokovima, isključenjima, odredbama i uslovima sadržanim u polisi ili prilozima uz polisu, osiguravač nije u obavezi da osiguraniku isplati naknadu iz osiguranja za troškove nastale zbog

1. zamjene ili popravljanja šipova ili elemenata potpornih zidova
   b) koji su stavljeni na pogrešno mjesto, pogrešno postavljeni ili zaglavljeni tokom izgradnje,
   c) koji su izgubljeni, napušteni ili oštećeni tokom pobijanja ili vađenja, ili
   d) koji su blokirani zaglavljenom ili oštećenom opremom za pobijanje ili cijevnim oblogama;
2. popravljanja nepovezanih ili neprikačenih šipova;
3. popravljanja curenja ili prodora materijala bilo koje vrste;
4. ispunjavanja šupljina ili zbog zamjene izgubljenog bentonita;
5. toga što neki šipovi ili elementi fundiranja nijesu prošli test opterećenja ili na drugi način nijesu dostigli svoj projektovanu nosivost;
6. vraćanja profila i dimenzija u prvobitno stanje.

Ovaj Prilog se ne primjenjuje za štete prouzrokovane prirodnim opasnostima. Teret dokazivanja da je takva šteta pokrivena je na osiguraniku.

GEORGIOS KARKANIAS
PRESIDENT

03/12/18

Prilog 200- Rat i terorizam

Bez obzira na bilo koju odredbu koja je u suprotnosti u okviru ovog osiguranja ili bilo koje klauzule uz isto, dogovoreno je da ovo osiguranje isključuje gubitak, štetu, trošak ili rashod bilo koje prirode koji je direktno ili indirektno izazvan bilo kojim navedenim događajem ili koji nastane kao posljedica istog ili u vezi s istim bez obzira na drugi uzrok ili događaj koji doprinosi datom gubitku istovremeno ili bilo kojim drugim redosljedom:

1. rat, invazija, postupci stranih neprijatelja, neprijateljstva ili ratne operacije (bilo da je rat objavljen ili ne), građanski rat, pobuna, revolucija, ustanak, građanski nemiri koji dobijaju razmjer ustanka ili vode ka ustanku, vojnoj i drugoj uzurpaciji vlasti; ili

2. bilo koji čin terorizma.

U smislu ove klauzule, čin terorizma označava čin koji obuhvata, uključujući ali ne ograničavajući se na, korišćenje sile ili nasilja i/ili prijetnju istim, bilo kojem licu ili grupi(ama) lica, bilo da se postupa samostalno ili u ime bilo koje(ih) organizacije(a) ili vlade(a) ili u vezi s istima, koji je izvršen iz političkih, vjerskih, ideoloških ili sličnih razloga uključujući namjeru da se utiče na bilo koju vladu i/ili da se zastraši javnost ili dio javnosti.

Ova klauzula takođe isključuje gubitak, štetu, trošak ili rashod bilo koje prirode koji je direktno ili indirektno izazvan bilo kojim činom, ili koji je posljedica istog ili u vezi s istim, preduzetim radi kontrolisanja, prevencije, sprečavanja stavki navedenih pod (1) i/ili (2) iznad ili koji se na bilo koji način odnosi na iste.
Ako Osiguravač bude tvrdio da iz razloga ovog isključenja, bilo koji gubitak, šteta, trošak ili rashod nije pokriven ovim osiguranjem, teret dokazivanja suprotnog pada na Osiguranika.

U slučaju da bude utvrđeno da je bilo koji dio ovog odobrenja nevažeći ili neprimjenjiv, ostatak ostaje na punoj snazi i dejstvu.

Ratna municija

Ovim se napominje i potvrđuje da Opšta isključenja navedena iznad pod a) ne važe za gubitak ili štetu na Osiguranoj imovini koja proistekne ili bude prouzrokovana detonacijom ratne municije ili njenih dijelova ili u blizini Projektnog gradilišta pod uslovom da prisustvo takve municije nije posljedica ratnog stanja koje je u toku u vrijeme gubitka ili štete.

GEORGIOS KARKANIAS
PRESIDENT

03/12/18

Prilog 201 - Isključenje rizika radioaktivne kontaminacije, hemijskog, biološkog, biohemijskog i elektromagnetnog oružja

Ova klauzula je od najveće važnosti i ima prvenstvo nad svim navedenim u ovoj polisi što nije u skladu s njom.

1. Ovo osiguranje ni u kojem slučaju ne pokriva gubitak, oštećenje, odgovornost ili troškove koji su direktno ili indirektne prouzrokovani, ili čijem je nastanku doprinijelo, ili koji proizlaze iz:

1.1 jonizirajućeg radioaktivnog zračenja ili radioaktivne kontaminacije nuklearnim gorivom ili nuklearnim otpadom ili sagorijevanjem nuklearnog goriva;

1.2 radioaktivnim, toksičnim, eksplozivnim ili drugim opasnim ili kontaminirajućim svojstvima nuklearnih postrojenja, reaktora ili drugih nuklearnih sklopova ili njihovih nuklearnih sastavnih dijelova;

1.3 oružja ili uređaja za koje se koristi atomska ili nuklearna fisija i/ili fuzija ili neka druga slična reakcija ili radioaktivna sila ili supstanca;

1.4 radioaktivnih, toksičnih, eksplozivnih ili drugih opasnih ili kontaminirajućih svojstava bilo koje radioaktivne supstance. Isključenje iz ove tačke ne odnosi se na radioaktivne izotope, osim nuklearnog goriva, ako se ti izotopi pripremaju, prevoze, skladište ili koriste u komercijalne, poljoprivredne, medicinske, naučne ili druge slične miroljubive svrhe;

1.5 hemijskog, biološkog, biohemijskog ili elektromagnetskog oružja.

GEORGIOS KARKANIAS
PRESIDENT

03/12/18

Prilog 202-Elektronski podaci

1. Isključenje elektronskih podataka

Bez obzira na bilo koju suprotnu odredbu u okviru Polise ili bilo kojeg odobrenja uz nju, dogovoreno je i potvrđuje se sljedeće:

a) Ovom Polisom se ne osigurava gubitak, šteta, uništenje, deformacija, brisanje, kvarenje ili izmjena Elektronskih podataka zbog bilo kojeg uzroka (uključujući ali ne ograničavajući se na Kompjuterski virus) ili gubitak korišćenja, smanjenje funkcionalnosti, troškovi, rashodi bilo koje vrste koji iz toga proizađu, bez obzira na sve druge uzroke ili događaje koji doprinose datom gubitku istovremeno ili bilo kojim drugim redosljedom.
Elektronski podaci označavaju činjenice, koncepte i informacije koje su konvertovane u oblik koji se može koristiti za komunikaciju, tumačenje ili obradu elektronskom i opremom za elektromehaničku obradu podataka ili elektronski kontrolisanom opremom i obuhvata programe, softver i druga kodirana uputstva za obradu i rukovanje podacima ili upravljanje i rukovanje takvom opremom.
Kompjuterski virus znači skup koruptivnih, štetnih ili drugih neovlašćenih instrukcija ili kod koji obuhvata skup maliciozno unesenih neovlašćenih instrukcija ili kod, programski ili drugi, koji se širi kroz kompjuterski sistem ili mrežu bilo koje prirode. Kompjuterski virus obuhvata ali nije ograničen na „trojanske konje", „crve", i „vremenske ili logičke bombe".

b) Međutim, u slučaju da neka od opasnosti navedenih ispod nastane kao posljedica bilo koje od stavki navedenih u stavu (a) iznad, ova će Polisa, prema njenim uslovima i isključenjima, pokrivati fizičko oštećenje nastalo tokom perioda važenja Polise na imovini koja je osigurana ovom Polisom a koje je direktno izazvano tako navedenom opasnošću.

Navedene opasnosti: Požar, Eksplozija

2.Vrednovanje medija za obradu elektronskih podataka

Bez obzira na bilo koju suprotnu odredbu u okviru Polise ili bilo koje klauzule primijenjene uz nju, dogovoreno je i potvrđuje se sljedeće:

Ukoliko medij za obradu elektronskih podataka koji je osiguran ovom Polisom pretrpi fizički gubitak ili oštećenje osigurano ovom Polisom, onda će osnova za vrednovanje biti cijena popravke, zamjene ili vraćanja datog medija u stanje koje je postojalo neposredno prije takvog gubitka ili oštećenja, uključujući trošak reprodukovanja svih Elektronskih podataka koji su u njemu sadržani, pod uslovom da se dato sredstvo popravi, zamijeni ili vrati u dato stanje. Takvi troškovi reprodukovanja obuhvataju sve razumne i neophodne iznose, koji ne smiju prelaziti _____% osiguranog iznosa u pogledu sekcije 1 kako je navedeno u detaljima vezano za rizike uz originalnu polisu, a koje napravi Osiguranik pri ponovnoj izradi, prikupljanju i sastavljanju takvih Elektronskih podataka. Ako mediji ne budu popravljeni, zamjenjeni ili vraćeni u dato stanje osnova za vrednovanje je trošak praznog medija. Međutim, ovom Polisom se ne osigurava bilo koji iznos koji pripada vrijednosti takvih Elektronskih podataka za Osiguranika ili bilo koju drugu stranu, čak i ako se takvi Elektronski podaci ne mogu ponovo izraditi, prikupiti ili sastaviti.

GEORGIOS KARAMANAS

03/12/18

Prilog 203 - Isključenje političkih rizika, finansijskih garancija i kreditnih rizika

Ovo osiguranje isključuje svaku štetu ili odgovornost koja proističe iz sljedećeg:

1. Raskid ugovora zbog nepredviđenih okolnosti, uključujući ali bez ograničenja na sve oblike neizvršenja ugovornih obaveza, embarga na uvoz i/ili izvoz, nepotvrđivanja ugovora, transfera u različitoj valuti, izdavanja obveznica i garancija i obeštećenja u slučaju više sile.
2. Neisporučivanje ili kašnjenje u isporuci ili snabdijevanju bilo kojom robom osim kao direktna posljedica fizičkog oštećenja.
3. Bilo koji oblik finansijske garancije, obeštećenja za jemca za kredit.

GEORGIOS KARKANIAS
PRESIDENT

03/12/18

Prilog 204 - Industrije, curenje, zagađenje i kontaminacija

Ovo Osiguranje ne pokriva bilo koju odgovornost za:

1) Ličnu povredu ili Tjelesnu povredu ili gubitak, oštećenje, ili gubitak usled korišćenja imovine direktno ili indirektno izazvan curenjem, zagađenjem ili kontaminacijom, pod uslovom da ovaj stav (1) ne važi za odgovornost za Ličnu povredu ili Tjelesnu povredu ili gubitak ili fizičko oštećenje ili uništenje materijalne imovine, ili gubitak korišćenja takve imovine koja je oštećena ili uništena, pri čemu je takvo curenje, zagađenje ili kontaminacija izazvana iznenadnim, nenamjernim i neočekivanim događajem tokom perioda važenja ovog Osiguranja.

2) Trošak uklanjanja, poništenja ili čišćenja supstanci koje su iscurile, zagadile ili kontaminirale osim ukoliko je curenje, zagađenje ili kontaminacija izazvana iznenadnim, nenamjernim i neočekivanim događajem tokom perioda važenja ovog Osiguranja.

3) Novčane kazne, penali, kaznene ili štete kao primjeri.

Ova klauzula ne proširuje ovo Osiguranje tako da pokrije bilo koju odgovornost koja bi bila pokrivena ovim Osiguranjem da ova klauzula nije priključena.

GEORGIOS KARKANIAS
DIRECTOR

03/12/18

Prilog 205 -Isključenje rizika od azbesta

Ova Polisa je izmijenjena i dopunjena tako da ne važi za bilo koji zahtjev ili zahtjeve za odgovornost koja je posljedica proizvodnje ili distribucije ili korišćenja, ili bilo kojeg od navedenog, azbesta ili proizvoda koji sadrže azbestna vlakna i odgovornost koja je posljedica azbestoze ili bilo koje povezane bolesti i odgovornost nastalu zbog inhalacije azbestnih vlakana.

GEORGIOS KARKANIAS
PRESIDENT

03/12/18

Prilog 206 - Isključenje odgovornosti za rizik od ograničenog neispravnog stanja (DE 3)

Ova Polisa isključuje gubitak ili oštećenje i troškove koji su neophodni za zamjenu, popravku ili ispravku

(i) Osigurane imovine koja je u neispravnom stanju zbog nedostatka u specifikacijama projektnog plana ili nedostataka u izradi takve Osigurane imovine ili bilo kojeg njenog dijela

(ii) Osigurane imovine koja je izgubljena ili oštećena kako bi se omogućila popravka ili ispravka Osigurane imovine koja je isključena pod (i) iznad

Isključenje pod (i) iznad ne važi za drugu Osiguranu imovinu koja nije u neispravnom stanju ali je oštećena kao posljedica istog.

U svrhu Polise a ne samo ovog Isključenja neće se smatrati da je Osigurana imovina izgubljena ili oštećena samo na osnovu postojanja bilo kojeg nedostatka u specifikaciji za projektni plan ili izradi Osigurane imovine ili bilo kojem njenom dijelu.

GEORGIOS MARKANTAS
PRESIDENT

03/12/18

Prilog 207 - Isključenje rizika od unapređenja projekta (DE 5)

Ova polisa isključuje:

(i) Trošak koji je neophodan za zamjenu, popravku ili ispravku bilo koje Osigurane imovine koja je neispravna u specifikaciji projektnog plana ili izradi;

(ii) Gubitak ili oštećenje Osigurane imovine koje je izazvano radi omogućavanja zamjene, popravke ili ispravke takve neispravne Osigurane imovine.

Ali, ukoliko oštećenje Osigurane imovine (osim oštećenja definisanog pod (ii) iznad) nastane kao posljedica takvog nedostatka, ovo Isključenje se ograničava na troškove dodatnog rada koji proisteknu i dodatne troškove unapređenja originalne specifikacije projektnog plana ili izrade.

U svrhu Polise a ne samo ovog Isključenja neće se smatrati da je Osigurana imovina izgubljena ili oštećena samo na osnovu postojanja bilo kojeg nedostatka u specifikaciji projektnog plana ili izradi Osigurane imovine ili bilo kojeg njenog dijela.

GEORGIOS KARKANIAS
PRESIDENT

03/12/18

Prilog 208 – Rizici u vezi sa vodom

Ova Klauzula, ukoliko je ugovorena čini sastavni dio polise i važi bez obzira na uslove, odredbe i isključenja sadržana u polisi osiguranja ili odobrena u njoj.

1. Isključenje

1.1 Osiguravač neće nadoknaditi štetu Osiguraniku nastalu zbog:

1.1.1 gubitka ili štete na vezovima, pristaništima, molovima i sličnom izazvane njihovim slijeganjem ili potonućem,

1.1.2 uobičajenim dejstvom rijeke/mora,

1.1.3 gubitkom ili štetom na više od 200 m nezavršenog ili nezaštićenog valobrana, keja ili drugog vodenog objekta,

1.1.4 gubitka, štete ili odgovornosti zbog erozije tla,

1.1.5 iskopavanja ili ponovnog iskopavanja,

1.1.6 izgubljenog ili oštećenog materijala za popunjavanje,

1.1.7 zamjene ili ispravke stubova ili elemenata potpornih zidova,

-koji su nestali ili nisu u liniji ili su zaglavljeni tokom izgradnje,

-koji su izgubljeni ili napušteni ili oštećeni tokom vožnje ili izvlačenja, ili

-koji su prepriječeni zaglavljenim ili oštećenom opremom za stubove ili kućištem,

1.1.8 popravljanja odvojenih ili otkačenih talpi,

1.1.9 ispravke svakog curenja ili prodiranja materijala bilo koje vrste,

1.1.10 kao posljedica toga što stubovi elemenata temelja nisu prošli test nosivosti ili na drugi način nisu postigli svoj projektovani kapacitet nosivosti,

1.1.11 za ponovno uspostavljanje profila ili dimenzija,

1.1.12 bilo koje plutajuće opreme kao što su kesoni, barke i slično i odgovornost koja proističe iz istog,

1.1.13 svake mobilizacije/demobilizacije i/ili drugih troškova koji proizilaze iz pripravnosti/čekanja građevinske opreme na moru zbog vremenskih uslova,

1.1.14 gubitka ili oštećenja zbog vuče žica, sidra, lanaca i bova,

1.1.15 gubitka ili oštećenja zbog uticaja utovara,

1.1.16 pomorske odgovornosti,

2. Definicija

2.1 uobičajena aktivnost mora označava stanje mora, koje se manifestuje do broja 8 na Boforovoj skali, ili stanje plime i oseke, struje i talasa mora, za koje se mora statistički očekivati da će se desiti tokom perioda od 20 godina, koje god je nepovoljnije.

GEORGIOS KARKANJAS
PRESIDENT

03/12/18

3. Garancije

3.1 Dogovoreno je i potvrđeno da će bez obzira na uslove, isključenja ili odredbe sadržane u polisi, Osiguranik:

3.1.1 primati dnevne vremenske izvještaje od lokalne meteorološke stanice tokom perioda važenja osiguranja i imati stalni kontakt s lokalnom meteorološkom stanicom tokom upozorenja datog 12 sati unaprijed za nastupajuću oluju.

3.1.2 uspostaviti navigaciju za javni saobraćaj do gradilišta od najmanje 200m.

GEORGIOS KARKANIAS
PRESIDENT

03/12/18

Prilog 209 - 72 časa

U svrhu primjene franšiza dogovoreno je da svaki gubitak ili šteta na Osiguranoj imovini opisana u detaljima vezano za rizik koja nastane tokom bilo kojeg perioda od sedamdeset dva uzastopna sata a koja je izazvana olujom, nepogodom, poplavom ili zemljotresom smatraće se da je jedan događaj i prema tome čini jednu štetu. U svrhu gorenavedenog, početak svakog takvog perioda od sedamdeset dva sata utvrđuje se prema nahođenju Osiguranika, pri čemu se podrazumijeva, međutim, da ne može postojati preklapanje bilo koja takva dva ili više perioda od sedamdeset dva sata u slučaju štete koja nastane tokom produženog perioda vremena.

U slučaju gubitka ili štete na Osiguranoj imovini gdje važi više od jednog iznosa prikazanog iznad, važiće samo najveći iznos.

GEORGIOS KARKANIAS

03/12/18

Prilog 210 – Podjela 50/50

Osiguranik mora pregledati pakovanja po dolasku na Gradilište ili bilo koji prostor za skladištenje izvan gradilišta a oštećena pakovanja se moraju otvoriti odmah. Daje se dozvola da se odloži otpakivanje oštećene ambalaže na 60 dana za ključne proizvode i 120 dana za sve druge proizvode od datuma dospijeća na Gradilište. Oštećenja koja budu otkrivena tokom perioda odloženog otpakivanja isključena su iz ove polise.

U slučaju da se gubitak ili oštećenje na osiguranoj imovini otkrije nakon gorenavedenog perioda odloženog otpakivanja a ne bude moguće da se utvrdi kada ili gdje je nastao gubitak ili šteta, dogovoreno je da se svaki zahtjev za takav gubitak ili štetu dijeli po principu 50/50 između Osiguravača po ovoj polisi i polise za osiguranje robe u transportu, ako su različite.

GEORGIOS KARKANIAS
PRESIDENT

03/12/18

Prilog 211 – Automatsko ponovno pokriće do sume osiguranja

U odsustvu pismenog obavještenja datog od strane Osiguravača kojim se izjavljuje suprotno, odgovornost Osiguravača neće ostati umanjena za iznos bilo koje štete koja se desi, a Osiguranik se obavezuje da će platiti odgovarajuću dodatnu premiju za takvo automatsko ponovno pokriće do sume osiguranja, pri čemu premija neće prelaziti proporcionalni iznos plaćene premije iz prethodnog perioda.

GEORGIOS KARAMANIS

03/12/18

Prilog 212 - Planovi i dokumenta

U slučaju slučajnog fizičkog gubitka ili slučajne fizičke štete koja se nadoknađuje prema ovoj polisi na planovima, skicama, spisima, dokumentima, rukopisima, ili evidenciji u kompjuterskom sistemu koji čine dio Osigurane imovine, dogovoreno je da će Nadoknada iz ove Polise obuhvatiti i troškove rada i kompjuterskog vremena utrošenog za reprodukovanje takve imovine, uključujući sve troškove koji nastanu pri izradi informacija koje su u njima sadržane, ali

a) ne obuhvata bilo koji gubitak pretrpljen od strane Osiguranika zbog izobličenja ili nedostupnosti takve informacije;

b) limit pokrića:

GEORGIOS KARKANIAS
PRESIDENT

03/12/18

Prilog 213 – Profesionalne naknade

Osiguravač će isplatiti nadoknadu Osiguraniku u pogledu naknada za arhitekte, geodete, konsultante, inženjere i druge naknade koje su dodatne uz one koje su sadržane u procijenjenim projektnim troškovima koji se mogu osigurati a koji su neophodni i razumno nastali pri popravci ili ponovnom uspostavljanju predašnjeg stanja nakon nastanka štete na Osiguranom projektu zbog bilo kojeg uzroka pokrivenog prema ovoj Polisi. Pokriće je ograničeno na iznos koji je naveden u polisi.

Ovo dodatno pokriće ne obuhvata naknade i troškove koji su povezani s javnim-ovlašćenim procjeniteljima. Na dodatno pokriće primjenjuje se franšiza koja je ugovorena.

Limit pokrića:

GEORGIOS KARKANIAS
PRESIDENT

03/12/18

Prilog 214 - Državni organi

Osiguranje predviđeno ovom polisom na osiguranoj imovini obuhvata i one dodatne troškove ponovnog vraćanja u pređašnje stanje izgubljene, uništene ili oštećene imovine koja je ovim osigurana a koji mogu nastati jedino zbog neophodnog poštovanja građevinskih i drugih propisa iz državne nadležnosti ili utvrđenog u skladu s bilo kojim državnim organom, ali uvjek pod uslovom da:

(a) iznos koji se može dobiti u okviru ove klauzule ne isključuje:

(i) troškove nastale pri poštovanju bilo kojeg od gorenavedenih propisa ili podzakonskih akata

(a) u pogledu štete koja nastane prije odobrenja primjene klauzule,
(b) u pogledu štete koja nije osigurana u okviru ove klauzule,
(c) u okviru kojeg je Osiguraniku uručeno obavještenje prije nastanka štete,
(d) u pogledu neoštećene imovine ili neoštećenih dijelova imovine osim temelja (osim ukoliko je posebno isključeno) onog dijela imovine koja je uništena ili oštećena;

(ii) dodatne troškove koji bi bili potrebni radi dovođenja u pređašnje stanje imovine koja je izgubljena, uništena ili oštećena da nije došlo do neophodnog poštovanja gorenavedenih propisa ili zakonskih akata,

(iii) iznos bilo koje naknade koja proistekne iz porasta vrijednosti kapitala koja može biti plativa u pogledu imovine ili od strane njenog vlasnika zbog poštovanja bilo kojeg od navedenih propisa ili zakonskih akata,

(b) rad na vraćanju u pređašnje stanje mora biti započet i izvršen bez nerazumnog odlaganja i u svakom slučaju mora biti završen u roku od dvanaest mjeseci nakon nastanka štete ili u onom daljem roku koji Osiguravač može dozvoliti (ako se to zahtijeva gorenavedenim propisima ili zakonskim aktima) pod uslovom da odgovornost Osiguravača prema ovom Proširenju time nije uvećana.

Limit pokrića:

GEORGIOS KARKANIAS
PRESIDENT

03/12/18

Prilog 215 -Privremene popravke

Nadoknada predviđena ovom klauzulom obuhvata troškove izvršenja privremenih popravki nakon gubitka ili štete koja je osigurana u okviru ove Polise kako bi se rad na Projektu mogao nastaviti pod uslovom da odgovornost Osiguravača prema ovom memorandumu ne prelazi 15% stvarnih troškova stalne popravke.

Limit pokrića:

GEORGIOS KARKANIAS
PRESIDENT

03/12/18

Prilog 216 – Uklanjanje ostataka

Pokriće po ovoj Polisi obuhvata one troškove koji su neophodni i koje razumno napravi Osiguranik u pogledu uklanjanja ostataka, rastavljanja, razbijanja, podupiranja ili ojačavanja bilo kojeg dijela imovine uništenog ili oštećenog kao posljedica osigurane nepredviđene situacije.

Međutim, pokriće koje je dato ovom klauzulom ne obuhvata troškove raščišćavanja, bilo na imovini Osiguranika ili u oblasti u okruženju imovine, u pogledu zaliha ili proizvoda.

Limit pokrića:

GEORGIOS KARKANIAS
PRESIDENT

03/12/18

Prilog 217 – Minimizacija štete

Osiguranje se proširuje tako da obuhvati odgovornost Osiguranika za troškove koji su nužno i razumno nastali kao posljedica hitne radnje preduzete tamo gdje je šteta neizbježna ili nakon štete radi sprečavanja ili minimiziranja dalje štete na Osiguranoj imovini, pod uslovom da odgovornost Osiguranika za takve troškove ne smije prelaziti iznos za koji bi Osiguravač bio u obavezi da plati da data radnja nije preduzeta i uvjek pod uslovom da ograničenje koje je prikazano u detaljima u vezi sa rizicima za svaki dio gdje je primjenjivo (ili onaj veći iznos koji može biti dogovoren u pismenom obliku od strane Osiguravača, prema njegovom apsolutnom nahođenju, prije nastanka troškova).

Limit pokrića:

Prilog 218 - Ograničenje i isključivanje sankcija

Osiguravač ne obezbjedjuje pokriće i neće biti odgovoran da plati bilo kakvu štetu ili da obezbijedi bilo kakav nadoknadu ukoliko bi obezbjeđivanje takvog pokrića, plaćanje takve štete ili obezbjeđivanje takve nadoknade izložilo Osiguravača bilo kakvim sankcijama, zabranama ili restrikcijama po rezolucijama Ujedinjenih Nacija ili trgovinskim ili ekonomskim sankcijama, zakonima ili regulativama Evropske Unije, Ujedinjenog Kraljevstva Velike Britanije ili Sjedinjenih Američkih Država.

GEORGIOS KARKANIAS
PRESIDENT

03/12/18

Prilog 219 – Klauzula o eskalaciji

Budući da vrijednosti definisane u Prilogu predstavljaju Procijenjene Završne Vrijednosti radova i samim tim su privremene, potvrđuje se da će konačne završne vrijednosti radova predmetnog osiguranika biti Sume osiguranja.

Ukoliko Sume osiguranja, definisane na gore-opisan način:

(1) prevazilaze procijenjene završne vrijednosti navedene ovdje, osiguranik/osiguranici potvrđuju da će prijaviti Osiguravaču iznos takvog prekoračenja i da će platiti uvećanu premiju prema dogovorenim stopama, a Osiguravač potvrđuje da će prihvatiti njihov proporcionalni udio povećanja od maksimalno stotinu petnaest procenata (115%) procijenjenih završnih vrijednosti i da neće primijeniti prosjek ni na jednu štetu

ili

(2) su manje od procijenjenih završnih vrijednosti navedenih ovdje, Sume osiguranja proporcionalno će se smanjiti i Osiguravač potvrđuje da će vratiti premiju po dogovorenim stopama srazmjerno umanjenju osigurane sume.

Ovaj tekst Posebnih uslova za osiguranje objekata u izgradnji protiv svih rizika sa svim prilozima stupa na snagu dana 01.11.2013. godine, kada počinje i da se primjenjuje.

Predsjednik Odbora direktora

Zoran Višnjić

GEORGIOS KARKANIAS
PRESIDENT

02/12/18

GEORGIOS KARKANIAS
PRESIDENT

03/12/18

On the basis of the Law on Insurance (»Official Gazette of the Republic of Montenegro« no. **078/06** and **19/07**) the Articles of Incorporation of „UNIQA neživotno osiguranje" a.d. Podgorica, the following business policy act was passed at the meeting of the Management Board held on August 8th 2009:

UNIQA
osiguranje

CONDITIONS
FOR GENERAL LIABILITY INSURANCE

GEORGIOS KARKANIAS
PRESIDENT

03/12/18

I INTRODUCTORY PROVISIONS

Meaning of certain expressions
Article 1

In these conditions, certain expressions shall have the following meaning:

Insurer – joint stock insurance company with which an insurance agreement shall be concluded, »Uniqa neživotno osiguranje« a.d.

Proposer – person that wants to conclude an insurance agreement with the Insurer and for that purpose submits a written Proposal to the Insurer;

Policy holder – person concluding an insurance agreement with the Insurer,

Insurant - person, whose liability is covered by insurance,

Third party – a person that is not the subject of the insurance agreement, i.e. a person whose liability is not covered by insurance. According to these conditions, a third party shall not be considered to be an employee, i.e. any natural person that is employed at the insurant, as well as any other natural person that on any grounds should perform an activity, render services or be trained for work at the insurant, as well as members of the Management Board, Supervisory Board and another management body and their spouses or close relatives. A third person shall not be considered to be either the spouse or other members of the household, as well as other persons that the insurant is obliged to support.

Proposal – written proposal of the Proposer made to the Insurer in order to conclude an insurance agreement.

Insurance policy – written document about the concluded insurance agreement.

Insurance premium – amount paid on the grounds of an insurance agreement.

Insurance sum – max. liability of the insurer per insured case,

Aggregate insurance sum (annual limit) – max. liability of the insurer for all insured cases during the insurance period,

Source of peril – activity (profession), objects (movable and immovable) or a certain feature from which liability as risk covered by this insurance may occur.

Financial loss (economic) – indirect loss that arose due to damage on persons and damage on objects, which represents a gain that the damaged might have reasonably expected according to the regular course or according to special circumstances and the realization of which was prevented with the activity of the person that caused the damage.

Implementation of conditions
Article 2

These conditions shall apply to General liability insurance except of those types of insurance that expressly exclude the implementation of these Conditions.

03/12/18

Provisions of the Terms and conditions for liability insurance, i.e. the provisions of the Law on obligatory relations shall apply to contractual relations that are not regulated with these Conditions.

II GENERAL PROVISIONS

Subject of insurance
Article 3

According to these conditions, the subject of insurance shall be the civil and legal liability of the insurant for losses due to death, bodily injury or impairment of health, as well as damages or destructions of objects of a third party, as well as financial losses.

The insurance shall also refer to liability for damage that occurred due to the:

1) Increase of peril and/or expansion of the insured source of peril that arose during the insurance period,

2) New source of peril that occurred at the insurant after concluding the insurance agreement,

3) Usage, i.e. possessing or rent of land, buildings and premises, that are exclusively used for the needs of an insured activity or profession,

4) Possession of garages that are on (in) insured real estates, if it does not concern a garage used for performing activity or a hotel garage,

5) Use of elevators intended for the transport of persons and cargo,

6) Storage of heating material and power for the exclusive use in performing the insured activity or profession,

7) Theft or disappearance of things of the insurant's employees for personal use, except of money, watches, cameras, valuables of all kinds, securities and documents of all kinds, on condition that the things are placed in closed premises or closed repositories,

8) Losses due to theft or disappearance of objects of third parties.

If it concerns objects mentioned in paragraph 2 items 3, 4, and 5 hereof, the insurance shall include also the liability of the insurant as the investor or contractor of construction works (new buildings, repair, remodelling, whitewashing, digging and similar) if the preliminary value of this works in each separate case should not exceed 10.000 euro.

Insured case
Article 4

An insured case shall be a loss that occurs towards third parties from any activity, possessing of property and objects or from a certain feature as sources of peril that are marked in the insurance policy, and on the basis of the civil and legal liability of the Insurant from which obligations of compensation for damage towards third parties arise or could arise for the Insurant.

GEORGIOS KARKANIAS
PRESIDENT

03/12/18

Temporal insurance validity
Article 5

The insurer shall be obliged only then when the insured case should occur during the insurance validity.

An insured case that occurred during the insurance validity and the cause of which was from the period which preceded the conclusion of the insurance agreement or from the period when the insurance was interrupted, shall be covered by insurance only then when till the insurance commencement or repeated insurance commencement the policy holder or insurant were not familiar and could not be familiar with the cause from which the insured case originated.

Concerning damages arising due to the impairment of health that arise gradually, in case of doubt, it shall be considered that the loss event occurred then when the impairment of health was determined for the first time with the finding of the physician.

The deadline for submitting a request for compensation for damage of a third damaged person, i.e. insurant, on the basis of rights from insurance by the policy concluded in line with the conditions, shall be the deadline determined with the Law on obligatory relations.

Insurance against new sources of peril
Article 6

If the insurance agreement was concluded upon payment of the insurance premium completely or in part, on the basis of the total income, the cover from insurance shall be expanded also to liability from new sources of peril that shall appear at the insurant after concluding the insurance agreement, if no special insurance for that new arising source of peril was concluded.

Immediately after the appearance of a new source of peril, the insurant shall be obliged to inform the insurer in writing about the appearance of a new source of peril.

The insurer shall be obliged to inform the insurant about the acceptance into cover of new sources of peril within 8 (eight) days and on the grounds of a written information from the previous paragraph. If the insurer should not respond within eight days, it shall be considered that the new source of peril was included in insurance, if the mentioned new source of peril should be in line with the valid insurance conditions and premium tariff.

The insurer shall keep the right of calculating additional premium for the cover of new sources of peril from the previous paragraphs hereof, as well as the right of not accepting new sources of peril and it shall inform the policy holder in written form about that within the deadline mentioned in the previous paragraph.

The insurance sum that was agreed on the policy for previously insured sources of peril shall be valid for new sources of peril, too. If the policy should contain various insurance sums for some sources of peril, the insurance sum agreed for a certain source of peril shall be valid.

The insurance of new sources of peril shall not refer to liability from:

- keeping or usage of tracks (railway, funicular railways, cable railways and similar), theatres, cinemas, circuses and stands as well as making of films;
- possession or usage of motor vehicles and other vehicles on motor power (tractors, cultivators, self-propelled work machines), vessels and aircrafts
- production, processing, storage, usage and trade with explosive material, or radioisotopes, if an approval of the competent body is required for this,
- Hunting as activity and hunting sport

CEO Ričardas Kaminskas
PRESIDENT

03/12/18

Inclusions in coverage
Article 7

Unless it is specifically stipulated and quoted in the insurance policy and additional premium is paid, insurance coverage is extended to:

1. other legal or natural person as an additional insurant on which these conditions provide protection from the damage claims of third parties
Insurance coverage that provides to an additional insurant is limited only on its liability arising from the activities of the insurant and/or liability arising from his activity in connection with the activities of the insurant.

2. cross over liability of several insurants who are covered by insurance and listed in the insurance policy, in accordance with point 1. of this paragraph, i.e. insurance coverage is extended to the mentioned insurants so that will be considered that all the insurants have concluded this insurance separately and they can ask each other for damage claims.

Total obligation of the Insurer for the agreed inclusion and expansion of coverage under the previous paragraphs does not exceed agreed insurance sum for the entire period.

Conclusion of insurance agreements
Article 8

The provisions of terms and conditions shall apply for the conclusion of a liability insurance agreement between the insurer and policy holder, except if not otherwise stipulated with these conditions.

The insurance agreement shall be concluded on the basis of a written proposal of the policy holder done to the insurer.

If the insurance agreement is concluded on the basis of the written proposal and the Insurer does not reject it within 8 (eight) days from the date when the proposal arrived to the Insurer, it shall be considered that the proposal is accepted and that the insurance agreement is concluded when the proposer/ policy holder has signed a proposal of insurance.

The signature of the proposer/policy holder on the insurance proposal shall be considered to be the signature on the policy.

Negotiating of deductible
Article 9

In all cases insurance may be agreed with and without participation in claim (deductible) in line with the tariff, except in cases in which obligatory participation in the damage is envisaged.

Insurance sum
Article 10

The insurance sum shall be agreed in a fixed pecuniary amount and it shall be the max. liability of the insurer per one insured case, disregarding of the number of damaged persons and persons the liability of which is covered by insurance, if not otherwise agreed.

03/12/18

The insurance sum from the previous paragraph shall refer also to cases of death, bodily injury or impairment of health, damages or destructions of objects of third parties.

The total liability of the insurer, for all insured cases that occurred in one insurance year shall not exceed amount of 5 (five) agreed insurance sums of paragraph 1 hereof.

The total annual insurance sum shall be reduced with the payment of each separate compensation. After exhaustion of the total annual insurance sum, the insurance shall cease to be valid.

Territorial validity of the insurance
Article 11

In respect of the territorial validity of the insurance, Terms and conditions for liability insurance shall apply.

Exclusions from insurance
Article 12

Upon general exclusions defined with the Terms and conditions for liability insurance, the insurance concluded according to these conditions shall not cover the following claims:

1) that arise from environmental pollution,
2) that arise from products with defect that the Insurant produces or distributes,
3) that originate from objects of third parties possessed by (under control or management of) the Insurant, on any grounds,
4) claims caused by the Insurant who steered the vehicle with license plates, except if the damage should occur while the respective vehicle was not used as work machine,
5) that originate from objects of third parties that the Insurant keeps for professional purposes or that are kept or processed by the Insurant while performing its activity registered in the economic register, or damages caused by these things.
6) damages for which the Insurant shall be legally responsible as the employer pursuant to the provisions of positive legal regulations,
7) procedure of treatment, health and other interventions on animals such as castrating, insemination, shoeing, dressage,
8) due to participation on horse, bicycle, motorcycle and car races, boxing and wrestling fights, as well as participation for the preparation for a race, i.e. fight, except if not specially agreed upon extra payment of the premium.

III SPECIAL PROVISIONS FOR SOME SOURCES OF PERIL

Implementation of special provisions
Article 13

Upon liability insurance from certain sources of peril, in addition to basic provisions of these conditions, also special provisions of these conditions shall apply concerning the volume of cover. In case of deviation from the basic provisions, special provisions shall apply.

03/12/18

Car services, car mechanic workshops and similar
Article 14

Insurance shall refer also to claims from possessing places for storage of motor vehicles, as well as from the sale of the necessary material for the vehicle power (gasoline, oil, lubricator and similar).

If specially agreed, insurance shall cover liability against theft, damage, destruction or breakage of motor vehicles that are on repair, servicing or check-up in car service workshops, if the damage should arise due to:

- towage, driving, moving of the motor vehicle, trial drive outside the workshop (but not more than to the distance of 1 km from the workshop),
- unauthorized usage of the motor vehicle by the insurant's employees or other persons,
- usage of the crane intended for motor vehicle lifting,
- work of the automatic car wash

Exclusions from liability insurance for property claims on vehicles taken over for repair, servicing or check-up
Article 15

The insurer shall not offer insurance cover for:

1) demands for compensation referring to claims that arose as the consequence of inexpert performance of a direct service (repair, servicing, i.e. check-up), which is a professional activity of the insurant,
2) additional costs due to untimely procurement of spare parts, standard equipment, special tools and equipment necessary to carry out the repair,
3) additional expenses due to the price increase,
4) losses on structure elements and spare parts of cars, that were damaged, defective, worn-out or they should have already been repaired in the moment when the insurant took over the car,
5) claims that arose by the subcontractor of the insurant.

Hospitals, sanatoriums, mental homes, health centres, clinics and similar
Article 16

Insurance shall cover also liability for losses due to damage, destruction, disappearance or theft of objects for personal use of the patient and persons accompanying it, if these objects were given to the insurant to keep them safe.

If specially agreed, the insurance shall cover liability for claims due to disappearance and theft of money, securities, watches, documents, jewellery and other valuables only in case if these objects were given to the insurant for being kept and if these things are kept by the insurant in a locked cash box.

Losses caused during the treatment by doctors, midwives, nurses or assistants and other medical personnel through their work that is not according to the rules of the profession, shall be excluded from insurance (liability for professional/expert errors shall be excluded from insurance).

Distribution of electricity
Article 17

If specially agreed, insurance shall cover also cases in which there is liability of the insurant for claims suffered by the consumer of electricity (due to non-allowed deviation from the nominal voltage or frequency, due to stoppage and interruption in the delivery of electricity and in other cases, if the insurant is responsible for claim).

Companies
Article 18

According to these conditions, the term company shall not mean a business company founded and performing activities in order to gain profit (joint-stock companies, partner companies, public companies)

The insurance shall also cover liability:
1) from having meetings, sessions and performances of the company, stipulated by the Articles of Association or other general act of the company;
2) from possessing buildings, land, premises and devices serving exclusively for the needs of the company (e.g. playgrounds, drill fields, rifle ranges and other);
3) members of the company's management and other persons authorized to represent the company;
4) members of the company when performing activities on performances of the company and regarding these performances, in the interest and for the goals of the company.

For rifle clubs, insurance shall cover liability for claims only if they arose on a place determined for shooting.
Insurance shall comprise liability for damage, disappearance and theft of water vehicles (boats, sailboats and other) taken over for storage on condition that there is a constant guard. Damages on motor vessels shall be covered if the motor is fastened to the boat or stored at night in a closed room.

If specially agreed, insurance shall cover also liability of the company for claims from:
1) Performances that exceed the frame of common performances of the company, stipulated with the Articles of Association of the company;
2) Keeping animals;
3) Installing of stands;
4) Usage of sport grounds and devices (skating rings, slopes for sledging and skiing and other);
5) Activities that are performed by the company as incidental (e.g. restaurants in own management, baths and similar).

Local self-administration
Article 19

In addition to liability for claims that occurred by performing and due to performing the function of the body of local self-administration, the insurance shall include also liability from possessing or

03/12/18

using buildings, land, premises and devices that serve exclusively for the needs of performing operations of local self-administration.

Liability from other activities of local self-administration shall be included in insurance only if each source of peril should be insured separately.

Insurance shall comprise also liability of local self-administration for pure property claims.

Liability of the local self-administration for claims that occurred by death or bodily injury of a person due to attack, violence or terror as well as during public demonstrations and events, as well as for other claims that the local self-administration bodies were obliged to prevent according to valid regulations, shall be excluded from insurance.

Organizers of exhibits, performances, fairs and other events

Article 20

Legal and natural persons as organizers of exhibits, performances, fairs and other events, leaders and keepers of exhibition subjects (exhibits), escorts (guards) of persons and objects on exhibition space, for personal and property claims that the insurant causes to the participants, i.e. visitors of these events and for which it is obliged to pay compensation pursuant to the provisions of the law, may be insured by these conditions.

In line with these Conditions, personal liability for damages caused to participants of horse riding, bicycle, motor bicycle competitions, boxing and wrestling, as well as preparation for these competitions is being covered by the insurance only if agreed specially.

Exclusions from insurance against liability of organizers of exhibitions, performances, fairs and other events

Article 21

The insurer shall not compensate damages that:

a) are the consequence of burglary of exhibition subjects/exhibits,

b) that arise as the consequence of loading and unloading (installing, transport) of exhibition objects (exhibits), except for damages caused by accident on the exhibition subjects (exhibits) that are already set,

c) arise on property which was used for the organization of events (including the object/building in which such an event is organized),

d) are the consequence of activities performed by guest performers, artists, competitors, entertainers and stuntmen,

e) are caused by the organizers i.e. managers of exhibitions i.e. staff responsible for the protection of persons and things on exhibitions and events to one another.

Cloakrooms
Article 22

The insurance shall also cover liability of the insurant due to damage, destruction, disappearance or theft (and also due to replacement) of things given to the cloakroom for storage, with a corresponding confirmation (number, paper pad and similar).

Liability of the insurant for claims due to disappearance or theft of money, securities, valuables, watches and documents of any kind shall be excluded from insurance.

The insurer shall be obliged only when the cloakroom has a constant security guard and where other persons, except of the security guard, shall not have any access.

Persons rendering cleaning services
Article 23

Pursuant to these conditions, the insurer shall compensate property claims caused by the insurant to its contractual partner when rendering cleaning services, which understands the damage of property/things, furniture and equipment and mechanical devices, for which the insurant shall be obliged to pay compensation pursuant to the provisions of the law.

Exclusions from liability insurance of the persons rendering cleaning services
Article 24

The insurer shall not compensate:

a) costs that came from complaints on the quality of cleaning, such as costs of repeated cleaning or subsequent correction of lacks,

b) claims caused outside the place designated in the business agreement to be the place for rendering cleaning services,

c) losses due to theft.

Construction, mounting and similar activity
Article 25

The insurance shall also cover liability for claims arising from levelling of the grounds done by the insurant, if the levelling refers to works that the insurant has to do, whereby liability for damages on the object for the building and defence of which the levelling was done, shall be excluded from insurance.

The insurance shall refer also to liability for claims:

1) on the object on which the insurant shall perform construction or mounting works. In case that the construction or mounting works are performed on the existing object that belongs to the investor, the insurance shall cover claims on the part of the object on which works are done by the insurant.
2) immediately caused by damage of underground devices (such as pipes for gas, water, electricity, sewage and similar) if not specially agreed that also indirect claims shall be included;
3) caused by mining in performing the insurant's activity, but not for claims on immovable objects that during mining are on the distance less than 75 metres from the mining point, if not otherwise agreed.

03/12/18

Liability for the following claims shall be excluded from insurance:

1) on neighbouring construction, due to failure to perform appropriate reinforcement (support and similar);
2) on the construction, i.e. prefabricated object that the insurant builds or on which it works;
3) caused from destroying on immovable objects that are in a circle the radius of which corresponds to the height of the object that is being torn down.
4) if a part of the construction object or some construction and handicraft works are insured, the liability insurance of the contractor of construction works shall not cover damages on other parts of that building object or other building works and handicraft works, that are not insured, i.e. that are insured with another policy;
5) if a part of the prefabricated object or some assembling works are insured, the liability insurance of constructor of assembling work shall not cover claims on other parts of that prefabricated object or other assembling works that are not insured, i.e. that are insured with another policy.
6) on things and their integral parts that are being built in, assembled, repaired, processed and similar, on works that were performed or should be performed by the insurant and on a built-in material for damages that the insurant suffers due to additional works that it had to perform, as well as claims on a certain material.
7) in an agreed warranty period after delivery of work to the constructor
8) after the expiry of 1 month since the insurant completed the final works on the object, and the warranty period still did not start to run
9) on things on an existing object, if by the nature of works the damage of things, which thereby belong to the sources of peril, may be expected
10) for such claims on objects on which must be usually counted during mining works, despite of applying prescribed security measures
11) due to conscious breakage/neglecting of technical instructions or instructions of the valid technical body
12) due to a planning error by the insurant
13) due to expert error in technical consulting and supervision
14) on the basis of membership or partnership in the consortium. If the insurant is engaged as the subcontractor on the basis of an agreement, this shall not be considered to be membership or partnership in the consortium.

The following requests for the compensation for damage shall also be excluded from insurance:

1) which do not belong either to claims due to bodily injury or impairment of health of a person or to damages/destructions of material things of third persons – purely financial losses
2) breach of agreed liabilities
3) Conscious breach of legal rules and instructions given by the competent body
4) non observance of general technical rules, technical instructions, norms, standards or decision of the technical inspection or competent body
5) usage of untried statistical, calculation and other methods as well as unchecked constructions and materials
7) aesthetic errors, non-functionality and non-profitability
8) Environmental pollution as well as all types of pollution and emission
9) Nuclear reaction, nuclear radiation or radio active contamination

Bathing resorts, swimming pools
Article 26

Insurance shall cover also liability of the insurant for damage, destruction, disappearance and theft of things for personal usage of the bathing guests, if these were things locked in cabins or other appropriate premises intended for the storage of things or if they were given to the insurant for storage.

03/12/18

The liability for claims due to disappearance and theft of money, securities, valuables, watches, documents and similar, shall be covered by insurance, only if these things were given to the insurant for storage and if they were kept in a locked cash box.

The insurance shall cover also liability for claims caused by the insurant's things that serve for sport, recreation and leisure of the bathing guests.

Insurance shall not cover liability of the insurant for claims on vehicles on water and land and their spare parts, and on things that are on or in the vehicle.

Ports and public warehouses
Article 27

If specially agreed, insurance shall refer also to liability:
1) for claims that arose on somebody else's goods during: reloading, storage, assembling and tightening; weighing, measuring, counting, sorting, marking and increasing; packing and repair of package; transport and moving over the business premises;
2) for claims against pollution of water, shores and other objects.

Insurance shall not comprise liability:
1) for claims caused by pulling, pilotage, storing and protecting of ships; fastening, untying and saving of boats; transport of persons with pilot ships and rope boats; finishing, processing, refining, repair and similar; egalizing, fumigating, cleaning, whitewashing, mixing, drying and similar; international and internal dispatch of goods (forwarding); putting into storage and keeping of goods in cold storage plants;
2) for indirect damages (e.g.: loss of market, drop of prices, export / import ban).

Agricultural and forest activity
Article 28

Insurance shall cover also liability for claims caused by:
1) Keeping animals, but not claims that arise on animals when mating or artificial insemination, except if not otherwise agreed;
2) Usage of funds for killing weeds, as well as preventing and wiping out of plant diseases and pests on the land of the insurant
3) Doing construction works on the land of the insurant, if the preliminary value of these works does not exceed more than 5.000 euro
4) Incidental activities of the insurant, if the annual income from these activities does not exceed the amount of 1.000 euro
Insurance shall cover also liability of the insurant as a private person.

Railroad siding, funiculars, cable railways, rented rail warehouses, cranes and loading and unloading equipment
Article 29

If the activity of the insurant, as the source of peril from policies is performed by using railroad siding, funiculars, cable railways, rented rail warehouses, cranes and other equipment for loading and unloading, the insurance shall include:

1) liability for damages that arose from the use of the railroad siding (forest, field, industrial), funicular or cable railway, if the transport is done without payment of freight;

03/12/18

2) liability for damages from the use of cranes and loading and unloading equipment, if they did not occur when using equipment that according to its construction leaves the burden to fall;
3) contractual liability for claims that arose from the use of the rented rail warehouse towards the railway.

If specially agreed, insurance shall cover:

1) liability for damages due to the damage of railway cars, ships, motor vehicles by using cranes and other loading and unloading equipment;
2) liability for claims that occurred from the usage of the railroad siding (forest, field, industrial), funiculars or cable railways, if the transport is performed with the premium payment.

Private person – liability in that capacity
Article 30

Insurance shall cover liability of the insurant for damages that it causes in the capacity of a private person in everyday life, apart from the performance of the profession or trade:

1) as owner, user or lessee of a flat or separate house intended for living in it, a small garden and courtyard;
2) as an employer towards a person employed in the household;
3) by possessing and usage of a bicycle without a motor;
4) by going in for sports, except of sports worked out professionally, as well as sport that is connected with the usage of a vehicle having a motor of any kind, sport with aircrafts, hunting and fighting sports (box, fencing, wrestling, judo, karate and other);
5) as holder of tame animals that are not used for purposes of economic operations;
6) side or firearms for the possession of which it has a license and that serves for the defence or participation in shooting competitions.

In the same volume as in paragraph 1 hereof, the insurance shall refer also to liability:

1) of the insurant's spouse and children that live with it in the joint household and that it is obliged to support;
2) persons employed in the household of the insurant when performing activities of that household.

If a part of the flat, i.e. building is used for the performance of a profession, the insurance shall not comprise the liability from holding that part of the flat, i.e. building.

If specially agreed, liability for minor children that do not live with the insurant in the joint household shall be included as well.

Roads - maintenance
Article 31

If specially agreed, insurance shall cover also liability of the insurant for damages that occurred due to:

1) inappropriate protection fences or their inexistence, as well as inexistence of corresponding traffic signs and warnings of dangerous places on roads;
2) not mowing of grass and non-maintenance of plants on the road land;
3) various drifts on the road (snow, earth, garbage and other);
4) not strewing of the road in order to prevent the consequences of freezing.

03/12/18

Sport events
Article 32

Insurance shall comprise liability of the organizer of bicycle, motorcycle and car races during the race itself.

If the race is held on open tracks, such a track must be secured by the public security body.

Schools, institutions for education, upbringing, guarding and similar
Article 33

Insurance shall cover also liability of the insurant for losses due to damage, destruction, disappearance and theft of pupils' and cadets' things, only if the things are in corresponding premises used for the storage of these things.

Insurance against liability due to theft or disappearance of clothes, shoes or equipment of pupils and students during the classes may be agreed without concluding the basic insurance according to these conditions.

Liability for losses due to disappearance and theft of money, securities, precious metals, numismatic, philatelist and other collections and valuables of all kinds shall be excluded from insurance.

Insurance shall also cover liability:
1) of members of school councils and councils of educational and other institutions that manage the school, i.e. the institution, according to legal regulations and general acts of the school, i.e. of the educational and other institution;
2) from organizing excursions, picnics, school events and similar

Schools and educational and training institutions for the management of all types of:

1) motor vehicles, aircrafts and other vehicles
2) all types of sport activities (riding, parachute jumping, paragliding, gliding...)

shall be excluded from insurance.

Hotel keeping/restaurant keeping activity
Article 34

According to these conditions, a hotel-keeping/restaurant keeping activity shall understand an activity performed by: hotels, restaurants, boarding-houses, rest homes, organized camps, students', solitary persons' and tourist homes and similar.

Insurance shall cover also liability of the insurant due to damage, destruction, disappearance or theft of things used for personal needs of guests that they brought into the hotel object. Things for personal usage shall be considered to be also an amateur camera with equipment, weekend and camping equipment, radio and TV set, record player with records and cassette player, binoculars, hunting rifle, personal guns and sport equipment.

Insurance shall not refer to liability for claims that occurred:

1) on guests' things during their use, processing or work on them by the insurant;

GEORGIOS KARKANIAS PRESIDENT

03/12/18

2) due to disappearance or theft of guests' things if they were brought to the premises that are accessible to everybody, in which food and beverage are served and similar, except if given to the cloakroom for being kept.

If specially agreed, insurance shall cover also liability of the insurant for damages on the vehicle, according to the provisions in **Vehicles - storage**.

Liability for claims due to disappearance or theft of money, jewellery, securities and documents of any kind shall be covered with insurance, if these things were given to the insurant and placed in a locked cash box.

Insurance shall comprise also liability

1) from auxiliary plants that belong to the insurant (such as washing rooms, kitchens, bakeries, butcher shops and similar) and which serve exclusively for the performance of the insurant's activity;
2) from possessing things, premises and playing fields for sport and recreation that are used by guests free of charge.

Entertainment devices
Article 35

Insurance shall cover also liability for claims that arise during the assembling and disassembling of entertainment devices.

Fire companies
Article 36

Insurance shall comprise liability for claims caused during drills, actions and offering help.

Insurance shall cover also personal liability of the members of the company from performing activities in the capacity of a fireman.

Insurance shall refer also to liability of the fire company as the owner, lessee or usufructurary of the land, buildings and premises that serve exclusively for the needs of the company.

Liability for claims on things for the rescue of which the company was called shall be excluded from insurance.

Veterinarians, veterinary clinics and stations
Article 37

Insurance shall cover also liability of the insurant due to the injury of animals during treatment.

If specially agreed, insurance shall cover also liability for claims due to injury of animals referring to castration, gas treatment and artificial insemination.

Vehicles - storing
Article 38

Insurance shall cover also liability of the insurant for damage, destruction, disappearance, theft and replacement of vehicles left for storage (motor vehicles, trailers, motorcycles and bicycles).

03/12/18

Insurance shall also cover damages on vehicles caused by the insurant in the time period when it renders services for the needs of guests like parking, storing in a garage and similar in the area of the hotel object.

If the vehicle is not placed in a locked garage, claims on objects that are on or in the vehicle, as well as on certain parts of the vehicle, except of things that are produced serially with the vehicle and things that according to the regulations had to be in the vehicle, shall be included from insurance.

The insurer shall be obliged only when the parking lot for vehicles is precisely defined, marked and the vehicles are regularly stored and secured, on condition that there is always a guard.

Buildings and lands (possession, i.e. usage)
Article 39

Insurance shall cover also liability for sources of peril from article 4, paragraph 2 hereof.

Insurance shall cover also liability:

1) for claims caused by persons in charge of maintenance and cleaning of buildings, i.e. land as the source of peril;
2) for claims caused by persons that take the place of an insurant in the capacity of a new beneficiary, usufructuary or trustee in bankruptcy;
3) for damages from the usage of children's playgrounds with belonging equipment for the entertainment of children, if the playground belongs to the building as the source of peril from the policy;
4) from possessing a garden, if it is used for own purposes and if it belongs to the building or land as the source of peril from the policy.

If the building has several users, i.e. owners, the insurer shall not be obliged to compensate for the damage caused by one user, i.e. owner to the other owner, its spouse and persons that it supports.

Requirements of the owner, i.e. user of the flat, its spouse and persons that it supports shall be included in the insurance, if they do not participate in the joint liability for claims with other owners, i.e. users of the building.

Animals
Article 40

Insurance shall cover also the liability of the guard of animals and of other persons that take care about animals that are mentioned in the insurance policy.

Insurance shall cover liability for claims from acts of mating animals, if it has been specially agreed.

Liability from keeping animals such as horses, mules and other towing animals as well as dogs shall be covered by insurance only if insurance of another source of peril (e.g. agricultural farm, liability as a private person) was also concluded.

The liability of the insurer for losses due to damage/injury, destruction, loss or disappearance of somebody else's placed animals (placing in somebody else's stables) shall be excluded.

GEORGIOS KARKANIAS PRESIDENT

03/12/18

The insurer shall be obliged to compensate the costs of the veterinary check-up of the insured animals in case of existence of a contagion with the rabies virus up to 1% of the insurance sum mentioned in the policy.

In case of renting out, leasing out of animals, insurance shall not apply, but damages caused by the activity of these animals towards third parties shall be accepted into insurance.

Changes of insurance conditions
Article 41

These conditions may be changed or amended in the way and by procedure in which they were passed, upon prior obtaining of the opinion of an authorized actuary and notifying the Agency for supervision of insurance of Republic of Montenegro.

The policy holder shall be informed about changes and amendments of the Conditions, in compliance with the law.

Implementation of Terms and Conditions for liability insurance and legal regulations
Article 42

Concerning issues that are not regulated with these conditions, the provisions of the Terms and Conditions for liability insurance, i.e. the Law on obligatory relations shall apply.

For issues that are regulated contrary to the provisions of the Terms and Conditions for liability insurance, provisions of these conditions shall apply.

III FINAL PROVISIONS

Article 43

These conditions shall take effect as of the adoption date, and the Terms and conditions for general liability insurance dated June 8th 2008 shall cease to be valid.

President of the Management Board

03/12/18

GEORGIOS KAKKANIAS
PRESIDENT

03/12/18

On the basis of the Law on Insurance of Republic of Montenegro and Corporation of „UNIQA neživotno osiguranje" a.d. Podgorica, the following business policy act was passed at the meeting of the Management Board held on **March 11th 2013**:

SPECIAL CONDITIONS
FOR CONTRACTORS ALL RISK INSURANCE
(translation)

Whereas the Insured named here has made to the UNIQA neživotno osiguranje a.d. (hereinafter called the "Insurer") a written proposal which together with any other statements made in writing by the Insured for the purpose of this Policy is deemed to be incorporated herein,

Now this Policy of insurance witnesses that subject to the Insured having paid to the Insurer the premium mentioned in the Schedule and subject to the terms, exclusions, provisions and conditions contained herein or endorsed hereon the Insurer will indemnify the Insured in the manner and to the extent hereinafter provided.

General exclusions

The Insurer will not indemnify the Insured in respect of loss, damage or liability directly or indirectly caused by or arising out of or aggravated by

a) war, invasion, act of foreign enemy, hostilities (whether war be declared or not), civil war, rebellion, revolution, insurrection, mutiny, riot, strike, lockout, civil commotion, military or usurped power, a group of malicious persons or persons acting on behalf of or in connection with any political organization, conspiracy, confiscation, commandeering, requisition or destruction or damage by order of any government de jure or de facto or by any public authority;
b) nuclear reaction, nuclear radiation or radioactive contamination;
c) wilful act or wilful negligence of the Insured or of his representatives;
d) cessation of work whether total or partial.

In any action, suit or other proceeding where the Insurer allege that by reason of the provisions of Exclusion a) above any loss, destruction, damage or liability is not covered by this insurance the burden of proving that such loss, destruction, damage or liability is covered shall be upon the Insured.

Period of cover

The liability of the Insurer shall commence, notwithstanding any date to the contrary specified in the Schedule, directly upon commencement of work or after the unloading of the items entered in the Schedule at the site. The Insurer' liability expires for parts of the insured contract works taken over or put into service.

At the latest the insurance shall expire on the date specified in the Schedule. Any extensions of the period of insurance are subject to the prior written consent of the Insurer.

GEORGIOS MAMMAS
PRESIDENT

03/12/18

General conditions

1. The due observance and fulfilment of the terms of this Policy in so far as they relate to anything to be done or complied with by the Insured and the truth of the statements and answers in the questionnaire and proposal made by the Insured shall be a condition precedent to any liability of the Insurer.
2. The Schedule and the Section(s) shall be deemed to be incorporated in and form part of this Policy and the expression "this Policy" wherever used in this contract shall be read as including the Schedule and the Section(s). Any word or expression to which a specific meaning has been attached in any part of this Policy or of the Schedule or of the Section(s) shall bear such meaning wherever it may appear.
3. The Insured shall at his own expense take all reasonable precautions and comply with all reasonable recommendations of the Insurer to prevent loss, damage or liability and comply with statutory requirements and manufacturers' recommendations.
4. a) Representatives of the Insurer shall at any reasonable time have the right to inspect and examine the risk and the Insured shall provide the representatives of the Insurer with all details and information necessary for the assessment of the risk.
   b) The Insured shall immediately notify the Insurer by telegram and in writing of any material change in the risk and cause at his own expense such additional precautions to be taken as circumstances may require, and the scope of cover and/or premium shall, if necessary, be adjusted accordingly.

   No material alteration shall be made or admitted by the Insured whereby the risk is increased, unless the continuance of the insurance is confirmed in writing by the Insurer.

5. In the event of any occurrence which might give rise to a claim under this Policy, the Insured shall

   a) immediately notify the Insurer by telephone or telegram as well as in writing, giving an indication as to the nature and extent of loss or damage;
   b) take all steps within his power to minimize the extent of the loss or damage;
   c) preserve the parts affected and make them available for inspection by a representative or surveyor of the Insurer;
   d) furnish all such information and documentary evidence as the Insurer may require;
   e) inform the police authorities in case of loss or damage due to theft or burglary. The Insurer shall not in any case be liable for loss, damage or liability of which no notice has been received by the Insurer within 14 days of its occurrence.

6. Upon notification being given to the Insurer under this condition, the Insured may carry out the repairs or replacement of any minor damage; in all other cases a representative of the Insurer shall have the opportunity of inspecting the loss or damage before any repairs or alterations are effected. If a representative of the Insurer does not carry out the inspection within a period of time which could be considered adequate under the circumstances, but not more than 14 days from the receipt of the insured's notification, the Insured is entitled to proceed with the repairs or replacement. The liability of the Insurer under this Policy in respect of any item sustaining damage shall cease if said item is not repaired properly without delay. The Insured shall at the expense of the Insurer do and concur in doing and permit to be done all such acts and things as may be necessary or required by the Insurer in the interest of any rights or remedies, or of obtaining relief or indemnity from parties (other than those insured under this Policy) to which the Insurer are or would become entitled or which is or would be subrogated to them upon their paying for or making good any loss or damage under this Policy, whether such acts and things are or become necessary or required before or after the Insured's indemnification by the Insurer.

7. If any difference arises as to the amount to be paid under this Policy (liability being otherwise admitted), such difference shall be referred to the decision of an arbitrator to be appointed in writing by the parties in difference or, if they cannot agree upon a single arbitrator, to the decision of two arbitrators, one to be appointed in writing by each of the parties within one calendar month after

GEORGIOS KARKANIS
PRESS

03/12/18

having been required in writing so to do by either of the parties, or, in case the arbitrators do not agree, of an umpire to be appointed in writing by the arbitrators before the latter enter upon the reference. The umpire shall sit with the arbitrators and preside at their meetings. The making of an award shall be a condition precedent to any right of action against the Insurer.

8. If a claim is in any respect fraudulent, or if any false declaration is made or used in support thereof, or if any fraudulent means or devices are used by the Insured or anyone acting on his behalf to obtain any benefit under this Policy, or if a claim is made and rejected and no action or suit is commenced within three months after such rejection or, in the case of arbitration taking place as provided herein, within three months after the arbitrator or arbitrators or umpire have made their award, all benefit under this Policy shall be forfeited.

9. If at the time any claim arises under the Policy there is any other insurance covering the same loss, damage or liability, the Insurer shall not be liable to pay or contribute more than their rateable proportion of any claim for such loss, damage or liability.

Section I – Material damage

The Insurer hereby agree with the Insured that if at any time during the period of cover the items or any part thereof entered in the Schedule shall suffer any unforeseen and sudden physical loss or damage from any cause, other than those specifically excluded, in a manner necessitating repair or replacement, the Insurer will indemnify the Insured in respect of such loss or damage as hereinafter provided by payment in cash, replacement or repair (at their own option) up to an amount not exceeding in respect of each of the items specified in the Schedule the sum set opposite thereto and not exceeding in any one event the limit of indemnity where applicable and not exceeding in all the total sum expressed in the Schedule as insured hereby.

The Insurer will also reimburse the Insured for the cost of clearance of debris following upon any event giving rise to a claim under this Policy provided a separate sum therefor has been entered in the Policy.

Special exclusions to Section 1

The Insurer shall not, however, be liable for:

a) the deductible stated in the Schedule to be borne by the Insured in any one occurrence;

b) consequential loss of any kind or description whatsoever including penalties, losses due to delay, lack of performance, loss of contract;

c) loss or damage due to faulty design;

d) the cost of replacement, repair or rectification of defective material and/or workmanship, but this exclusion shall be limited to the items immediately affected and shall not be deemed to exclude loss of or damage to correctly executed items resulting from an accident due to such defective material and/or workmanship;

e) wear and tear, corrosion, oxidation, deterioration due to lack of use and normal atmospheric conditions;

f) loss or damage to construction plant, equipment and construction machinery due to electrical or mechanical breakdown, failure, breakage or derangement, freezing of coolant or other fluid, defective lubrication or lack of oil or coolant, but if as a consequence of such breakdown or derangement an accident occurs causing external damage, such consequential damage shall be indemnifiable;

g) loss of or damage to vehicles licensed for general road use or waterborne vessels or aircraft;

GEORGIOS KARKANIAS
PRESIDENT

03/12/18

h) loss of or damage to files, drawings, accounts, bills, currency, stamps, deeds, evidences of debt, notes, securities, cheques;

i) loss or damage discovered only at the time of taking an inventory.

Provisions applying to Section 1

Memo 1 – Sums insured

It is a requirement of this insurance that the sums insured stated in the Schedule shall not be less than

for item 1: the full value of the contract works at the completion of the construction, inclusive of all materials, wages, freight, customs duties, dues, and materials or items supplied by the Principal;

for items 2 and 3: the replacement value of construction plant, equipment and machinery; which shall mean the cost of replacement of the insured items by new items of the same kind and capacity;

and the Insured undertakes to increase or decrease the amounts of insurance in the event of any material fluctuation in wages or prices provided always that such increase or decrease shall take effect only after the same has been recorded in the Policy by the Insurer.

If, in the event of loss or damage, it is found that the sums insured are less than the amounts required to be insured, then the amount recoverable by the Insured under this Policy shall be reduced in such proportion as the sums insured bear to the amounts required to be insured. Every object and cost item is subject to this condition separately.

Memo 2 – Basis of loss settlement In the event of any loss or damage the basis of any settlement under this Policy shall be

a) in the case of damage which can be repaired – the cost of repairs necessary to restore the items to their condition immediately before the occurrence of the damage less salvage, or
b) in the case of a total loss – the actual value of the items immediately before the occurrence of the loss less salvage,

however, only to the extent the costs claimed had to be borne by the Insured and to the extent they are included in the sums insured and provided always that the provisions and conditions have been complied with.

The Insurer will make payments only after being satisfied by production of the necessary bills and documents that the repairs have been effected or replacement has taken place, as the case may be. All damage which can be repaired shall be repaired, but if the cost of repairing any damage equals or exceeds the value of the items immediately before the occurrence of the damage, the settlement shall be made on the basis provided for in b) above.

The cost of any provisional repairs will be borne by the Insurer if such repairs constitute part of the final repairs and do not increase the total repair expenses.

The cost of any alterations, additions and/or improvements shall not be recoverable under this Policy.

GEORGIOS KAKANIAS

03/12/18

Memo 3 – Extension of cover

Extra charges for overtime, nightwork, work on public holidays, express freight are covered by this insurance only if previously and specially agreed upon in writing.

SECTION 2 – Third party liability

The Insurer will indemnify the Insured up to but not exceeding the amounts specified in the Schedule against such sums which the Insured shall become legally liable to pay as damages consequent upon
a) accidental bodily injury to or illness of third parties (whether fatal or not),
b) accidental loss of or damage to property belonging to third parties
occurring in direct connection with the construction or erection of the items insured under Section 1 and happening on or in the immediate vicinity of the site during the period of cover.

In respect of a claim for compensation to which the indemnity provided herein applies, the Insurer will in addition indemnify the Insured against
a) all costs and expenses of litigation recovered by any claimant from the Insured, and
b) all costs and expenses incurred with the written consent of the Insurer,
provided always that the liability of the Insurer under this Section shall not exceed the limits of indemnity stated in the Schedule.

Special exclusions to Section 2

The Insurer will not indemnify the Insured in respect of

1. the deductible stated in the Schedule to be borne by the Insured in any one occurrence;

2. the expenditure incurred in doing or redoing or making good or repairing or replacing anything covered or coverable under Section 1 of this Policy;

3. damage to any property or land or building caused by vibration or by the removal or weakening of support or injury or damage to any person or property occasioned by or resulting from any such damage (unless especially agreed upon by endorsement);

4. liability consequent upon

   a) bodily injury to or illness of employees or workmen of the Contractor(s) or the Principal(s) or any other firm connected with the project which or part of which is insured under Section 1, or members of their families;
   b) loss of or damage to property belonging to or held in care, custody or control of the Contractor(s), the Principal(s) or any other firm connected with the project which or part of which is insured under Section 1, or an employee or workman of one of the aforesaid;
   c) any accident caused by vehicles licensed for general road use or by waterborne vessels or aircraft;
   d) any agreement by the Insured to pay any sum by way of indemnity or otherwise unless such liability would have attached also in the absence of such agreement.

Special conditions applying to Section 2

1. No admission, offer, promise, payment or indemnity shall be made or given by or on behalf of the Insured without the written consent of the Insurer who shall be entitled, if they so desire, to take over and conduct in the name of the Insured the defence or settlement of any claim or to prosecute for their own benefit in the name of the Insured any claim for indemnity or damages or otherwise and shall have full discretion in the conduct of any proceedings or in the settlement of any claim and the Insured shall give all such information and assistance as the Insurer may require.

03/12/18

2. The Insurer may so far as any accident is concerned pay to the Insured the limit of indemnity for any one accident (but deducting therefrom in such case any sum or sums already paid as compensation in respect thereof) or any lesser sum for which the claim or claims arising from such accident can be settled and the Insurer shall thereafter be under no further liability in respect of such accident under this Section.

General provisons

The integral part of this Annex are following Causes stated below, which preconditioned to the types of works, the way of construction, natural or any other circumstances and conditions (which refer or efect on construction performance), amend, expand, narrow, exclude or present other changes of contracting conditions.

GEORGIOS KARKANIAS
PRESIDENT

03/12/18

GEORGE KARKANIAS
PRESIDENT

03/12/18

On the basis of the Law on Insurance (»Official Gazette of the Republic of Montenegro« no. **078/06** and **19/07**) and the Articles of Incorporation of „UNIQA neživotno osiguranje" a.d. Podgorica, the following business policy act was passed at the meeting of the Management Board held on August 8th 2009:

UNIQA
osiguranje

CONDITIONS FOR PROFESSIONAL LIABILITY INSURANCE AND LIABILITY INSURANCE FOR PRODUCTS WITH DEFECT

GEORGIOS KARKANIAS
PRESIDENT

03/12/18

I INTRODUCTORY PROVISIONS

Meaning of certain expressions
Article 1

In these conditions, certain expressions shall have the following meaning:

Insurer – joint stock insurance company with which an insurance agreement shall be concluded, »Uniqa neživotno osiguranje« a.d.

Proposer – person that wants to conclude an insurance agreement with the Insurer and for that purpose submits a written Proposal to the Insurer;

Policy holder – person concluding an insurance agreement with the Insurer and paying the insurance premium,

Insurant - person whose liability is covered by insurance,

Insurance policy – written document (on the form determined by the Insurer) about the concluded insurance agreement.

Insurance premium – amount paid on the grounds of an insurance agreement.

Proposal – written proposal of the Proposer made to the Insurer in order to conclude an insurance agreement.

Insurance sum per one loss event – max. liability of the insurer by an insured case,

Aggregate insurance sum (annual limit) – max. liability of the insurer for all insured cases during the insurance period,

Source of peril – activity (profession), objects (movable and immovable), legal relation or a certain feature from which liability as risk covered by this insurance may occur.

Third party – a natural or legal person using the services, i.e. product of the Insurant on the basis of an agreement, legal regulation or another written act.

Pure financial loss – a loss that exclusively caused a financial loss and is in no way connected with the damage on things or the damage on persons.

Implementation of conditions
Article 2

These conditions shall apply to Terms and Conditions for liability insurance.

03/12/18

Insured risks
Article 3

Pursuant to these conditions, the following risks may be insured:

1) professional liability risk of the insurant

2) Liability risk of the insurant for products with defect

Provisions of these Liability Insurance conditions shall apply on losses that occur as a consequence of performing professional activity of the Insurant and from liability insurance for products with defect.

Insurance against new sources of peril
Article 4

If specially agreed, the cover from insurance shall be expanded also to liability from new sources of peril, that occurred with the appearance of new sources of peril at the insurant, i.e. with the change of legal regulations that regulate the activity of the insurant, after concluding the insurance agreement, if no separate insurance was concluded for that new arising source of peril.

Immediately after the appearance of a new source of peril, the insurant shall be obliged to inform the insurer in writing about the appearance of a new source of peril.

The insurer shall be obliged to inform the insurant about the acceptance into cover of new sources of peril within 8 (eight) days and on the grounds of a written information from the previous paragraph. If the insurer should not respond within eight days, it shall be considered that the new source of peril was included in insurance, if the mentioned new source of peril should be in line with the valid insurance conditions and premium tariff.

The insurer shall keep the right of calculating additional premium for the cover of new sources of peril from the previous paragraphs hereof, as well as the right of not accepting new sources of peril and it shall inform the policy holder in written form about that within the deadline mentioned in the previous paragraph.

The insurance sum that was agreed on the policy for previously insured sources of peril shall be valid for new sources of peril, too. If the policy should contain various insurance sums for some sources of peril, the insurance sum agreed for that certain source of peril shall be valid.

Inclusions in coverage
Article5

Unless it is specifically stipulated and quoted in the insurance policy and additional premium is paid, insurance coverage is extended to:

1. other legal or natural person as an additional insurant on which these conditions provide protection from the damage claims of third parties
Insurance coverage that provides to an additional insurant is limited only on its liability arising from the activities of the insurant and/or liability arising from his activity in connection with the activities of the insurant.

2. cross over liability of several insurants who are covered by insurance and listed in the insurance policy, in accordance with point 1. of this paragraph, i.e. insurance coverage is extended to the mentioned insurants so that will be considered that all the insurants have

GLORGIOS KARKANIAS
PRESIDENT

03/12/18

concluded this insurance separately and they can ask each other for damage claims.

Total obligation of the Insurer for the agreed inclusion and expansion of coverage under the previous paragraphs does not exceed agreed insurance sum for the entire period.

Conclusion of insurance agreements

For the conclusion of a professional liability insurance agreement and liability agreement for products with defect, the provisions of Terms and Conditions shall apply, except if not otherwise stipulated with these conditions.

The insurance agreement may be concluded on the basis of an oral or written proposal of the policy holder done to the insurer.

If the insurance agreement is concluded on the basis of the written proposal and the Insurer does not reject it within 8 (eight) days from the date when the proposal arrived to the Insurer, it shall be considered accepted the proposal and that the insurance agreement is concluded when the proposer/ policy holder has signed a proposal of insurance.

The signature of the proposer/policy holder on the insurance proposal shall be considered to be the signature on the policy.

II SPECIAL PROVISIONS FOR PROFESSIONAL LIABILITY INSURANCE
Article 6

Provisions of Terms and conditions for liability insurance and provisions of these conditions shall apply to professional liability insurance.

Pursuant to these conditions, professional liability insurance shall understand insurance cover for the made professional error, badly done or inexpert proceeding, i.e. omission of the service renderer (insurant) the consequence of which shall be:

- Pure financial loss
- Death, impairment or worsening of health of the third party.
- Additional costs or profit loss of the client that arose due to non-professional and inexpert performance of services.

Insured case
Article 7

An insured case shall be a loss that was caused to the third party by professional error, badly done or inexpert proceeding, i.e. omission of the insurant and on the grounds of which the request for compensation from insurance on the basis of liability might occur.

It shall be considered that the insured case occurred at the moment when the loss event the consequence of which was the loss from the previous paragraph hereof, started producing effect:

- If the insured case is based on a written document of any kind, it shall be considered that the moment of its effect occurred at the moment when the insurant signed that document
- If the insured case occurred due to omission or oversight, it shall be considered that the insured case started with effect on the moment when an omitted action should have been

03/12/18

taken at the latest in order to avoid damage.

- In all other cases it shall be considered that the insured case started producing effect on the moment when at the latest it issued a wrong instruction or made a wrong action.

In cases of occurrence of serial claims, provisions of the Terms and conditions for liability insurance shall apply.

Temporal insurance validity
Article 8

The insurer shall be liable if the claim occurred during the insurance validity, i.e. not later than in the period of two years from the moment of the insurance end, and the loss event started with effect in the period of the insurance duration.

General exclusions concerning professional liability insurance
Article 9

Upon general exclusions defined with the Terms and conditions for liability insurance, the insurance concluded by these conditions shall not cover the following claims:

1) claims excluded with the Conditions for general liability insurance and terms and conditions for liability insurance

2) claims of aesthetic nature that occurred as the consequence of inadequate rendering of services,

3) liability of the insurant on the basis of contractual expansion of its liability also to cases for which by law it is not liable

4) claims caused outside the territory of the Republic of Montenegro, except if the territorial insurance validity is not expanded with the insurance agreement,

5) claims on roads that are not the result of accident and which were caused by vehicles or work machines the insurant was operating with,

6) losses or damages on constructions (e.g. roads, embankments, supporting walls etc.) due to weight or movement of heavy machines and vehicles, or claims caused by wading of the soil/land or crops,

7) claims from activities the consequence of which is environmental pollution,

8) claims caused by original agricultural products (farming products, products of cattle and fish raising), and hunting products.

1) Liability insurance for architects, planners, engineers, consultants and persons performing supervision

Article 10

Upon these conditions, legal and natural persons that offer services in the feature of the engineer or supervisory bodies, i.e. architects and planners may be insured, for claims that are caused as the consequence of a made professional error, badly done or inexpert proceeding, i.e. omission and which is contrary to the rules of the profession.

Insurance shall cover claims that arise during the performance of operations by the insurant, architects, engineers, planners or supervisory bodies that are employed or are in another contractual relation which is not employment with the insurant and for which the insurant shall be

GEORGIUS KARKANIAS
PRESIDENT

03/12/18

obliged to pay compensation pursuant to the provisions of the Law on obligatory relations and other positive legal regulations.

The insurer shall cover requests for compensation that result from

1) errors in plans and projects that the insurant worked out or revised,
2) errors in plans and projects done by architects, engineers that are employed or in another contractual relation with the Insurant,
3) claims from the field of operations of the supervisory engineer shall be covered by this insurance, if the supervision activity is done by the insurant concerning the project that is worked out on the basis of own plans.

Exclusions from liability insurance of architects, planners, engineers - consultants and persons performing supervision

Article 11

In addition to exclusions mentioned in the insurance conditions for general liability, the insurant shall not compensate the following:

1) when the insurant performs the activity out of the conditions prescribed by law and when it has no corresponding licenses or permits
2) when the insurant participates or should participate in performing works, building or assembling, or processing of a product in the feature of the main contractor, subcontractor, supplier, entrepreneur or in any other feature.
3) exceeding of authorities that result from the contract on the basis of which the Insurant performs an activity for the client of the Insurant.
4) in case when the insurant knew or could have known that there were legal reasons due to which it was obliged to reject to perform the activity for its client.
5) Activity of the insurant as the advisor, leader or employee in a company, association, union or enterprise of any kind.
6) Prognoses of optimization, speculation, terms and similar.
7) To miss the terms for the delivery of plans and drawings, if these terms are not determined by law or regulation
8) Explanation within the duration of works and delivery deadlines
9) Claims referring to giving licenses
10) Requests for claims that would unavoidably occur even during regular planning and/or building of objects. Costs of defence against requests that refer to the aforementioned are covered with the insurance cover.
11) Exceeding of the calculation if it is exclusively in calculation, and there are no lacks in the construction itself
12) Violation of the obligation of secrecy
13) Losses at loans or capital investments
14) violation of copyrights, patents, trade marks
15) Additional costs incurred due to repeated planning/building because of difficulties in the procurement or fitting of materials,
16) Costs that result from non-observing the final deadlines for planning or additional costs due to such a delay,
17) Losses or additional costs that result from price increase,

03/12/18

18) Losses that result from lack of aesthetic nature or obsolescence of the subject of work,

19) Losses that result due to reasons attributed as the subcontractor's fault

20) Losses that result from non-obtaining corresponding official licenses,

21) Losses due to interruption of work or production loss due to an insured event or loss of profit of the damaged party/submitter of the request for compensation,

22) Losses that result from errors in the data base that is included in technical and financial plans on condition that these data were not provided, i.e. checked by an engineer.

2) Liability insurance for persons rendering security services

Article 12

Upon these conditions legal and natural persons that perform operations of security protection of people and property may be insured against liability for damages that might appear for the person ordering services of security or a third party referring to the performance of security services and that are the consequence of the made professional error, badly done or inexpertly done proceeding i.e. omission.

The insurant shall be any natural or legal entity (entrepreneur or business company) performing operations regarding security and that possesses a corresponding license issued by the competent body in line with the law.

Insurance shall cover claims that arise when rendering security services to the insurant or persons that are employed at the insurant and for whom the insurant is obliged to pay indemnity pursuant to the provisions of the Law.

The insurer shall cover requests for compensation that result from:

a) injuries of persons (death, permanent disability, bodily injury) that are suffered by third parties due to implementation of excessive force during the property protection,

b) injuries of persons (death, permanent disability, bodily injury) that are caused to third persons (but excluding persons that illegally break through the protected zone or object) or their assigners or officials when protecting persons or property,

c) losses or damages on protected objects, furniture and devices, caused when protecting persons and property,

on condition that the liability of the Insurant for the caused losses may be determined in all three cases.

Exclusions from liability insurance of persons offering security services

Article 13

The insurer shall neither compensate for damages that result from illegal usurping of the guarded property/objects (theft, burglary) nor for damages covered by other insurances.

7) Insurance of professional liability of doctors and other medical staff

Article 14

According to these conditions, the subject of insurance shall be the civil and legal liability of the insurant for losses that occurred due to death, bodily injury or health impairment of third parties that occurred as the consequence of a professional error of the doctor or other medical staff.

03/12/18

On behalf of the insurant, the insurer shall indemnify the submitter of the request for compensation for damages due to impairment of health, bodily injury or death that were caused because of the violation of professional rules when performing medical services for which the Insurant is obliged to pay compensation pursuant to positive legal regulations of the Republic of Montenegro.

Exclusions from professional liability insurance of doctors and other medical staff

Article 15

This insurance shall not cover the following cases:

1) Losses that might occur from the activity of the insurant that is performed without the permit of the competent body,
2) Losses that arise from handling movable and immovable property/objects which is necessary for rendering medical services,
3) Costs suffered by the submitter of the demand for compensation due to the non-performance or delay in performing services,
4) Expenses which refer to the repeated performance of defective services or expenses necessary to correct lacks,
5) Loss of objects that the patient takes with it,
6) Losses caused during surgery in the field of plastic/aesthetic surgery except for reconstruction surgery being the consequence of an accident and/or congenital defect.
7) Negative effect of x-rays or other forms of radiation, including also losses caused by radioactive materials,
8) Loss – bodily injury, worsening of the general health conditions that may be attributed to the transport by an ambulance vehicle,
9) Losses caused during the activity of a university or academic student, health care of a specialist or pupil of a secondary medical school within education, practice or examinations,
10) Expenses for criminal charges or subjects in court against the media,
11) Other losses from liability which were not caused in regard to the medical profession.
12) Offered medical help without valid diagnostic or therapeutic support;
13) Usage of medicine intended for body weight reduction;
14) Activities of a dentist in general anaesthesia;
15) Demands for compensation that are in any way connected with the infection with HIV and hepatitis viruses;
16) Fines determined by courts and state bodies;
17) Clinical examinations; intra-hospital infections;
18) All procedures referring to safeguarding, transport and blood tests concerning blood transfusion;
19) All actions referring to artificial insemination;
20) Medical procedures of an unqualified or insufficiently qualified medical staff;
21) Accidents at work/illnesses due to work.

03/12/18

8) Liability insurance of physical therapists

Article 16

Upon these conditions persons rendering services in the feature of a physical therapist may be insured for losses due to death or health impairment of third parties that arise as the consequence of the made professional error, badly done or inexpert procedure, i.e. omission and which are contrary to the rules of the profession.

Insurance shall cover claims that arise when performing jobs by the insurant, physical therapist that is employed or in another contractual relation which is not employment with the insurant, and for which the insurant is obliged to pay indemnity pursuant to the provisions of the Law on obligatory relations and other positive legal regulations.

Exclusions from liability insurance of physical therapists

Article 17

This insurance shall not cover the following cases:

a) jobs/activities performed by the Insurant without corresponding license,

b) disturbance of the body of aesthetic nature and psychic health disturbance,

c) losses from liabilities that were not caused in relation to the activity of the Insurant.

9) Liability insurance of auditors, actuaries, tax advisors, renderers of accounting services, court experts and lawyers

Article 18

These conditions shall provide insurance cover for pure financial losses suffered by third parties due to professional error or omission of the insurant in performing jobs related to rendering professional services.

According to these conditions, third parties shall be considered to be persons that are not subjects of the insurance agreement, i.e. which are not the policy holder, insurant or insurer.
According to these conditions third parties shall not be considered to be:

1. employees, i.e. each natural person that is employed at the insurant, as well as any other natural person that on any grounds performs the job or offers services or is getting trained for work at the insurant
2. spouse and other members of the household and other persons that the isurant is obliged to support;

a) Authorized auditors

Article 19

This insurance shall cover liability for caused damage, if it occurred due to professional accounting or auditing activity of the Insurant, if the activity is performed in line with the Law on accounting and audit.

The insurant shall be a natural person having the title of an authorized auditor and that is the member of the Chamber of authorized auditors of the Republic of Montenegro or that works in an auditing company that is registered by the Chamber and which performs auditing operations in line with the Law on accounting and audit.

GEORGIOS KARKANTAS
PRESIDENT

03/12/18

An insured case shall be an event the consequence of which shall be pure financial loss that was caused to the client by professional error, badly done or inexpert proceeding, i.e. omission of the insurant concerning:

- audit of financial reports of business companies covered with the Law on accounting, determination of the regularity, reliability of financial reports,
- assessment, verification, giving expert opinions in the meaning of offering consulting services of the auditor concerning establishment, transformation i.e. cease of work of business companies,
- jobs of a financial, tax and accounting expert referring to the establishment, transformation, continuation of operations, financial management and IT system of the business companies
- giving expert opinions and advice regarding that,
- performance of other tasks of the auditor, that are stipulated by the law.

b) Authorized actuaries
Article 20

The insurant shall be a natural person having the title of an authorized actuary and performing actuary operations in compliance with the Law on Insurance.

This insurance shall cover the liability for caused damage if it occurred from professional actuary activity of the Insurant, if the activity is performed in line with the Law on insurance.
The activity of the Insurant shall understand to give opinion about:

- the manner of calculating the insurance premium tariff;
- whether technical reserves were created in line with the regulations and acts of the insurance company's business policy acts;
- the business policy acts in the procedure of their passing, i.e. in the procedure of changing and amending and implementing the business policy acts of the insurance company;
- financial reports and annual report on business operations of the insurance company;
- report on performing the policy of coinsurance and reinsurance;
- whether the mathematical reserve was calculated in line with the law;
- transfer of the insurance portfolio;
- whether the solvency margin and guarantee reserves of the insurance company are correctly calculated.

b) Tax advisors
Article 21

The insurant shall be a natural person or auditing company dealing with rendering of consulting services and giving advice referring to regulations that control tax obligations of business companies.

An insured case shall be an event the consequence of which shall be a pure financial loss that was caused to the client by professional error, badly done or inexpert proceeding, i.e. omission of the insurant concerning giving advice, rendering of consulting services and assistance referring to tax, tax obligations of legal and natural persons, participation in carrying out obligations, representation in tax bodies, elaboration of tax return, and on the basis of a written authority.

c) Rendering of accounting services
Article 22

An insurant shall be a natural person – auditor or authorized accountant that possesses a certificate of the Chamber of authorized accountants and auditors, or an auditing company

03/12/18

dealing with offering consulting services and elaboration of financial reports of business companies in line with the Law on accounting and audit of the Republic of Montenegro.

An insured case shall be an event the consequence of which shall be a pure financial loss that was caused to the client by professional error, badly done or inexpert proceeding, i.e. omission of the insurant in performing tasks referring to the:

- Elaboration of the system and methodology of the accounting policy, financial reports, elaboration of financial reports,
- Booking of data through the General ledger,
- Analysis of data shown in reports and in accounting records, drawing of conclusions that give grounds for reaching adequate decisions, preparation and delivery of correct internal and external information in line with the law and basic accounting principles,
- delivery of tax returns to tax bodies, representation at tax bodies.

c) Court experts
Article 23

An insurant shall be a natural person having the title of a court expert dealing with rendering services as an expert of forensic medicine and that is registered in the register of court experts within its specialty.

d) Lawyers
Article 24

This insurance shall cover liability for damage caused to the client of the lawyer, if it occurred from professional lawyer activity of the Insurant, i.e. if the activity is performed in compliance with the Law on legal practice and other positive legal regulations of the Republic of Montenegro.

The client of the lawyer shall be a person to whom the insurant shall offer legal assistance on the basis of a lawyer contract, proxy, authority or another written act. Offering legal help shall mean:
• to give legal advice;
• to write legal suits, complaints, requests, petitions and other petition requests;
• elaboration of contracts, wills, statements and other documents;
• representation and defence of natural and legal persons in courts and other state bodies, companies and other legal entities;
• representation of natural and legal persons in their legal operations by concluding contracts and settlements, receipt and disbursement of money and giving statements and cancellations;
• performance of other jobs concerning legal help on behalf of and for the account of a natural or legal person on the basis of which this person realizes any right.

Intermediaries and representatives in insurance
Article 25

This insurance shall cover liability for the caused damage, if it occurred from professional activity of the insurant, if the activity was carried out in line with the Law on insurance or from possessing things or from the features as sources of peril that are marked in the insurance policy, i.e. in the insurance conditions.

GEORGIOS KARKANTAS 03/12/18

Trustees in bankruptcy
Article 26

This insurance shall cover liability for caused damage, if it occurred from the scope of operations of the trustee in bankruptcy, if the operations of the trustee in bankruptcy were performed in line with the law on bankruptcy.

When concluding an insurance agreement, the policy holder or insurant shall be obliged to deliver data to the insurer about legal entities for which the insurant was appointed trustee in bankruptcy.

The scope of operations of the trustee in bankruptcy shall be all jobs defined with the Law on bankruptcy that the insurant shall be obliged to perform on the basis of the Decision of the court on instituting a bankruptcy procedure with which the insurant shall be appointed the trustee in bankruptcy and particularly:

- taking measures in order to protect the bankruptcy debtor's property;
- inventory of property;
- elaboration of the opening balance;
- insurance of property and employment of persons;
- payments to creditors and delivery of the closing balance;
- and performance of other operations from the Law on bankruptcy.

Real estates agents
Article 27

This insurance shall cover liability for the damage caused to the client, if it occurred from professional activity of the insurant, if the activity is performed in line with the law.

The client of the real estates agent shall be a person that participates in the business and that is an ordering party to the intermediary for proceeding and if an intermediary agreement about that exists signed by the seller or purchaser, i.e. one participant in the exchange, lessor or lessee.

Exclusions from insurance
Article 28

This insurance shall not offer protection in cases of:

1) non-observance of the agreed deadlines, if the client of the insurant is responsible for that;
2) exceeding of authorities;
3) compensation due to damage, destruction or losing of money, checks or securities or their consequences;
4) actions of the Insurant as the supervisory, consulting, managing or steering body, director, chief, proxy or employee in a company, union, association, alliance or company of any kind;
5) forecasts of optimization, speculation, terms and similar;
6) financial, pecuniary, credit operations (credits, mortgages) operations referring to securities;
7) violation of the obligation of secrecy;
8) exceeding of cost and loan calculations, as well as loss at loans or capital investments;
9) fraud by the employee of the Insurant or other persons that help, i.e. work for it;
10) for losses that occurred due to lack in the cash box, errors at disbursement or fraud by the employee of the insurant.
11) penalties charged to the insurant due to omission.
12) losses caused by the insurant to its contractual partners by violating contractual provisions with which expand its liability also to cases for which otherwise by law it would not be responsible.

03/12/18

13) exceeding of authorities that result from the lawyer's contract, authority, proxy or another written act on the basis of which the insurant shall offer legal assistance to the client;
14) losses caused by activities of the actuary for which the take-away of the authorities in line with the Law on Insurance is foreseen;
15) exceeding of authorities;
16) in case when the actuary knew or might have known that there were legal reasons due to which it was obliged to refuse to offer professional services;
17) in case that the lawyer refuses to offer legal assistance by order of the court and there are no legal reasons due to which it is obliged to refuse to offer legal assistance;
18) if the lawyer performs operations in cooperation with pseudo-clerks;
19) demands for compensation that arose after the expiry of 30 days after the resignation of the proxy, and which do not concern cases of denying legal assistance according to the Law on legal procedure;
20) exceeding of authorities from the law on bankruptcy procedure which regulates the scope of operations of the trustee in bankruptcy;
21) in case when the insurant knew or might have known that there were legal reasons due to which it was obliged to refuse the appointment for trustee in bankruptcy;
22) in case that the insurant was appointed the trustee in bankruptcy with the decision of the court and there were legal reasons due to which the insurant cannot or could not be appointed the trustee in bankruptcy;
23) if the loss arose due to activities of the trustee in bankruptcy that was approved by the bankruptcy council or due to proceeding according to the instruction of the bankruptcy judge;
24) if the loss arose due to activities of persons that were employed by the trustee in bankruptcy, except if the loss occurred due to its failure to perform supervision over their work;
25) if the trustee in bankruptcy participates in the bankruptcy procedure in line with the Law on bankruptcy and liquidation of banks and insurance companies;
26) if the trustee in bankruptcy performs operations in cooperation with pseudo-clerks;

III SPECIAL PROVISIONS FOR LIABILITY INSURANCE FOR PRODUCTS
Article 29

Liability risk for the product quality shall be insured in line with the provisions of the Terms and Conditions for liability insurance, general liability insurance conditions and these conditions.

According to these conditions, an insured case shall be a loss that occurs from the product after its delivery due to lacks, about the existence of which the insurant did not know and the consequence of which shall be:
1) bodily injuries, illness or death of a third party,
2) losses in the form of destruction, damage or disappearance of things of third persons,

Products shall be considered to be all material objects or parts of them that appeared from the registered activity of the insurant by observing all legal and technical regulations, as well as regulations on providing quality standards, with the goal to sell these things as goods on the market. According to these conditions, products shall not be intellectual and other services, nor basic agricultural products (products from earth, cattle raising and fishing), including also additional equipment and package.

A product defect shall be an error in: planning, construction, material or manufacture, as well as lacks in the instructions for the correct usage of the product and which may cause bodily injuries, illness or death of the third party, as well as damage, destruction or disappearance of things of third parties. There is a lack when the product does not provide safety that is expected with right, taking into account all circumstances, including also advertising, then the purpose for which it is intended and the time when it was put into circulation. It shall not be considered that the product has a defect just because later a product of higher quality was put into circulation.

GEORGIOS KARKANIAS
PRESIDENT

03/12/18

The delivery shall be a real delivery to the third party performed by the insurant, disregarding of the legal grounds of the delivery. The delivery shall be considered to be performed in the moment when the insurant loses the option of disposal, supervision and control over the product, i.e. option to influence the product or its implementation.

According to these conditions, the source of peril shall be the product with defect after its delivery by the insurant;

Temporal insurance validity

Article 30

The insurer shall be liable if the damage occurred in the period of the insurance duration, i.e. not later than in the period of one year from the moment of the insurance end, and the delivery of the product was performed within the insurance duration period.

Expansion of insurance

Article 31

In case of liability insurance for products with defect, the liability of the insurant due to damage caused by integral parts of the product and other elements that were ordered and procured from other persons and which the insurant – producer integrates into products under its name, shall be included, too.

If specially agreed, insurance shall cover also the insurant's liability for damages to third parties that occurred from the final product by building in, connecting, mixing the insurant's product with other products without any lacks.

On the grounds of this expansion, the insurer shall cover the following claims:

a) expenses incurred successively concerning the technical and financially justified repair or amendment of the final product, including also costs of disassembling and removing of the defective product made by the Insurant that was already assembled by the user and expenses of assembling new products in order to replace the previous ones (but excluding procurement and transport costs of the new product), or

b) costs of the user of the final product due to the usage of the defective product, or

c) difference in value if the final product might be sold at a reduced price,

d) expenses incurred by the user concerning the disassembling, assembling and cleaning of machines and technical equipment because of defective products.

Insurance shall cover also damages related to poisoning with salmonella, but not more than up to 20% from the insurance sum, which is stated on the policy.

Exclusions concerning liability insurance for products with defect

Article 32

The insurer shall not compensate for the following:

1. if the product was not delivered to the market or the producer produced or distributed the

03/12/18

product outside the frame of its usual business activity,

2. the product was without errors in the moment of elaboration or distribution and the cause of the error occurred later, or if that cause could not be recognized in the moment of elaboration and distribution,
3. the damage was not caused due to lack/defect of the insured part of the product, but it occurred due to the structure or composition of the end/final product composed of that defective part; or the defective/lacking final product might be attributed to the user's manual issued by the producer of the final product.
4. the liability for damages that occurred due to unusual usage of the product or usage of the product for purposes it is not intended for.
5. losses for which it cannot be proved that the product had a lack and that there is no causative connection between the product with defect and suffered damage.
6. losses from products that the insurant has not delivered.
7. losses from a product with lack that probably was not existing at the time when the insurant delivered the product or that lack appeared later.
8. losses from a product that was not intended for sale and delivery by the insurant, or from a product that was not produced within the regular activity.
9. losses due to a product with lack that arose due to the reconciliation of the product's features with the prescribed norms.
10. losses from products with lack, if the level of scientific and technical knowledge when the product was delivered, was not enabling to discover lacks, or the causative connection between the loss and lack of the product.
11. liability of the insurant for losses when the insurant has knowledge about the defect or lack of the product;
12. losses if the producer i.e. insurant should not check the quality of the built-in parts which it buys at others and which it integrates into the products;
13. losses on the produced, i.e. sold/delivered products, as well as on their spare parts;
14. losses that occur from a product that was subsequently processed or adapted;
15. losses that result from a product that was alienated from the producer without its knowledge or that the producer gave somebody as a gift;
16. costs of withdrawing the product from the market (product recall);
17. losses that do not belong either to losses due to the bodily injury or health impairment of a person or to material losses in the form of damage, destruction or disappearance of things – pure financial losses;
18. obligations of compensation for damage on the basis of causative losses as for example work interruption or end of production;
19. Insurance shall not offer compensation for damages that occurred from products the usage of which or effect concerning concrete purposes of use according to corresponding know-how of the technique and science were not sufficiently tried out. In order to consider the product from the previous paragraph sufficiently tried out, it shall be necessary to issue a corresponding permit (attestation) for the product itself and its use on the basis of corresponding legal and administrative regulations.
20. purely financial losses
21. losses that arose concerning aviation products

GEORGIOS KARKANIAS
PRESIDENT

03/12/18

Except if not separately agreed, the insurer shall not accept and shall not compensate for:

1. claims caused by wrapping;
2. claims when the insurant or persons working for it set, built-in or fixed that defective product by themselves, or they ordered the product to be set, built-in or fixed by their order and for their account;
3. losses at parts, equipment or devices of motor vehicles, aircrafts or vessels;
4. losses of third parties that arise in the way that with the help of machines delivered (also maintained or fixed) by the insurant, things with defect were produced or processed, without any existence of damage on things in the sense of damage or destruction of material things and their consequences;
5. liability for products that are explosives and/or explosive substances;
6. costs of repair, reconstruction, modification or replacement of the product and/or its part and any financial loss due to necessary mentioned costs.

Changes of insurance conditions and premium tariff

Article 33

These conditions may be changed or amended in the way and by procedure as they were passed, upon prior obtaining of the opinion of an authorized actuary and notifying the Agency for supervision of insurance of Montenegro.

The policy holder shall be informed about the changes and amendments of these Insurance conditions, in compliance with the law.

Implementation of Terms and Conditions for liability insurance and legal regulations

Article 34

Concerning issues that are not regulated with these conditions, the provisions of the Terms and Conditions for liability insurance, i.e. the Law on obligatory relations shall apply.

For issues that are regulated contrary to the provisions of the Terms and Conditions for liability insurance, provisions of these conditions shall apply

III FINAL PROVISIONS

Article 35

These conditions shall take effect as of the adoption date.

President of the Management Board

GEORGIOS KARKANTAS
PRESIDENT

03/12/18

GEORGIOS [illegible]KANIAS
PRESIDENT

03/12/18

On the basis of the Law on Insurance (»Official Gazette of the Republic of Montenegro« no. **078/06** and **19/07**) and the Articles of Incorporation of „UNIQA neživotno osiguranje" a.d. Podgorica, the following business policy act was passed at the meeting of the Management Board held on August 8th 2009:

UNIQA
osiguranje

CONDITIONS
FOR LIABILITY INSURANCE OF THE EMPLOYER

GEORGIOS KARKANIAS
PRESIDENT

03/12/18

I INTRODUCTORY PROVISIONS

Meaning of certain terms

Article 1

Certain terms in these conditions shall have the following meaning:

Insurer – joint stock insurance company with which an insurance agreement shall be concluded, »Uniqa neživotno osiguranje« a.d.;

Proposer – person who wishes to conclude an insurance agreement with the Insurer and for that purpose submits a written Proposal to the Insurer;

Policy holder – person who shall conclude an insurance agreement with the insurer and pay the insurance premium;

Insurant - person whose liability is covered with insurance;

Insurance policy – written document on a concluded insurance agreement;

Insurance premium – amount that shall be paid on the basis of the insurance agreement;

Proposal – written proposal of the Proposer made to the insurer in order to conclude an insurance agreement;

Insurance sum – max. obligation of the insurer per insured case,

Aggregate insurance sum (annual limit) – max. liability of the insurer for all insured cases during the insurance period,

Source of peril – activity (profession), objects (movable and immovable), legal relationship or a certain feature out of which liability may arise as risk covered with this insurance.

Employee – domestic or foreign natural person that is employed with the employer, as well as a person that performs operations on any grounds or is getting trained for work with the employer except of a person that is employed at the employer in order to perform operations of a support staff.

Implementation of conditions

Article 2

These conditions shall apply with the Terms and conditions for liability insurance.

II GENERAL PROVISIONS

Subject of insurance

Article 3

The subject of these conditions shall be the civil and legal liability of the insurant – employer for the damage caused due to death, injury of body or health, i.e. damage or destruction of the employees' objects, caused by a sudden and unexpected loss event in the business premises of

GEORGIOS KARKANIAS PRESIDENT

03/12/18

the employer, i.e. on places where operations from the activity of the employer – insurant are being performed.

This insurance shall cover liability of the insurant – employer for the caused damage if it occurred or from the registered activity of the insurant or from possessing things or from the feature as the source of peril that are marked in the insurance policy.

The insured source of peril mentioned on the policy shall comprise also the liability of the insurant against the utilization, i.e. possessing, rent or usufruct of land, objects and premises that are exclusively used for the needs of the insured activity or profession.

The insurance shall comprise also liability of the insurant for damages suffered by persons that perform work on any grounds or are getting trained for work with the employer, except of persons that are employed at the employer in order to perform operations of supporting staff,

a) whether when performing operations or trainings in the business premises of the Insurant,

b) or outside the premises of the Insurant during work which is done by order or in interest of the Insurant.

Insured case

Article 4

It shall be considered that the insured case arose on that moment when the loss event suffered by the employee, on the basis of which a request for the compensation from insurance against the insurant – employer might arise and on the basis of the civil and legal liability in accordance with article 3 hereof started being effective.

Several loss events that arose due to the same cause or from identical timely connected causes shall be considered to be one insured case – serial damages.

In case of serial damage, the moment when the first claim occurred shall be considered to be the moment of occurrence of it and in regard to this moment the volume of the agreed insurance cover for the whole claim in a row shall be determined.

Timely validity of the insurance

Article 5

The insurer shall be obliged only then when the insurance case should occur during the insurance validity.

The insured case that occurred during the insurance validity and the cause of which from the period that precedes the conclusion of the insurance agreement or from the time when the insurance was interrupted, shall be covered with insurance only then when the policy holder or insurant were not familiar and could not be familiar with the cause from which the insured case originates, up to the beginning of insurance or repeated start of insurance.

Concerning damages due to the injury of health that occur gradually, in case of doubt, it shall be considered that the loss event occurred then when for the first time with the finding of the physician the injury of health was determined.

The deadline for submitting a request for compensation for damage of a third damaged person, i.e. insurant on the basis of right from insurance by the policy concluded in line with these conditions shall be the deadline determined with the Law on obligatory relations.

03/12/18

Insurance against new sources of peril

Article 6

If specially agreed, the cover from insurance shall be expanded also to liability from new sources of peril that shall appear at the insurant after concluding the insurance agreement, if no special insurance for that new arising source of peril was concluded.

Immediately after the appearance of a new source of peril the insurant shall be obliged to inform the insurer in writing about the appearance of a new source of peril.

The insurer shall be obliged to inform the insurant about the acceptance into cover of new sources of peril within 8 (eight) days and on the grounds of a written information from the previous paragraph. If the insurer should not respond within eight days, it shall be considered that the new source of peril was included in insurance if the mentioned new source of peril should be in line with the valid insurance conditions and premium tariff.

The insurer shall keep the right of calculating additional premium for the cover of new sources of peril from the previous paragraphs hereof, as well as the right of not accepting new sources of peril and it shall inform the insurer in written form about that within the deadline mentioned in the previous paragraph.

The insurance sum that was agreed on the policy also for previously insured sources of peril shall be valid for new sources of peril. If the policy should contain various insurance sums for some sources of peril, the insurance sum agreed for a certain source of peril shall be valid for it, which shall be determined with the annex to the insurance agreement.

Insurance sum

Article 7

The insurance sum shall be agreed in a fixed pecuniary amount and it shall represent the max. liability of the insurer per one insured case from article 4 hereof disregarding of the number of damaged persons and persons the liability of which is covered with insurance, if not otherwise agreed.

The insurance sum from the previous paragraph refers to cases of death, injury of body or health, damages or destruction of objects of third persons.

The total liability of the insurer for all insured cases that occurred in one insurance year, may not exceed the amount of 5 (five) agreed insurance sums from paragraph 1 hereof.

The total annual insurance sum shall be decreased with the payment of each single compensation. After the exhaustion of the total annual insurance sum, the insurance shall cease to be valid.

Article 8

The payment of insured sums on the basis of life insurance agreement of the employee, i.e. insurance agreement of the employee against the consequences of an accident, concluded by the insurant shall not be included into the amount of compensation from liability insurance of the insurant that the insurer shall be obliged to pay out to the submitter of the claim request.

The upper limit of the insurer's liability as well as the deductible amount shall be defined with the insurance agreement.

03/12/18

Insurance validity by territory

Article 9

Regarding the territorial validity of the insurance, the provisions of the Terms and conditions for liability insurance shall apply.

Exclusions from insurance

Article 10

Along with general exclusions defined with the Terms and conditions for liability insurance, the insurance concluded according to these conditions shall not cover the following claims:

1) claims by loss event if the insurant should cause them by intent or gross negligence. According to these conditions, intent or gross negligence shall be considered to be:

   - if the insurant should not conclude a settlement with the employee and it comes out from the factual status that with denial of settlement obvious injustice would be done,
   - If the insurant was informed about the lacks of material, raw materials and products as well as means for work,
   - settlement concluded with intent contrary to the valid regulations,
   - giving orders to the employee for performing operations contrary to internal acts of the employer,
   - giving orders to the employee to perform activities referring to the work contrary to regulations on safety and health at work

2) claims in regard to professional illnesses or injuries at work that occurred besides all the measures of the employer in order to protect the employees,

3) claims for which the insurant shall be responsible as handling the vehicle and which are covered with obligatory insurance against liability of the motor vehicle user (MTPL), excluding claims that occur during the repair or maintenance of the vehicle that are being qualified as accidents regarding work,

4) pure financial claims,

5) claims suffered by employees on the way to and from the place of work as the consequence of an accident except if the accident should occur during the travel by means of transportation owned by the insurant or rented by the insurant.

6) the insurer shall not cover liability for a damage due to participation on horse, bicycle, motorcycle and car races, boxing and wrestling fights as well as participation on preparations for a race, i.e. a fight (training) that shall be organized by the insurant for its employees

7) Claim requests for compensation for damages:
   - On products sold by the insurant as well as damages caused by deficiency of a product or deficiency of the performed work after the transfer (product liability),
   - On employees' objects that do not belong into personal staff of the employee which are necessary or usual for performing work with the employer.
   - claims on transportation means owned by the employee shall not be compensated,
   - Because of the use of unattested working tools and auxiliary means for work,
   - Recourse requests of social insurance funds, pension and disability insurance funds as well as other funds that pay out compensations on the grounds of paid in contributions shall be excluded from insurance.
   - environmental damages
   - permanent temperature effects, gases, steam, humidity or precipitation (smoke, dust, soot) that caused damages gradually.

GEORGIOS KAIKANIAS
PRESIDENT

03/12/18

Changes of insurance conditions and Premium tariffs

Article 11

In the event of changed conditions and tariffs, the Insurer is obligated to inform policy holder in writing or in another suitable way at latest within 30 days before the expiration of current year of insurance. Policy holder may cancel the agreement within 30 days of receiving notice. In this case the agreement shall cease by expiration of the current year of insurance.

If the policy holder does not cancel the agreements as defined in previous paragraph, amended agreement shall be applied to the beginning of the next period of insurance.

Implementation of Terms and conditions for liability insurance and legal regulations

Article 12

For issues that are not regulated with these conditions, provisions of the Terms and conditions for liability insurance, i.e. the Law on obligatory relations shall apply.

For issues regulated contrary to the provisions of the Terms and conditions for liability insurance, the provisions of these conditions shall apply.

Jurisdiction in case of dispute

Article 13

In case of dispute between the policy holder – insurant and insurer, the venue shall be the insurer's domicile.

II FINAL PROVISIONS

Article 14

These conditions may be changed or amended in the way and by procedure according to which they were passed, with the prior obtaining of opinion of the authorized actuary and by informing the Agency for supervision of the insurance of Republic of Montenegro.

The policy holder shall be informed about the changes and amendments of these insurance conditions, in compliance with the law.

These conditions shall take effect as of adoption date

President of the Management Board

03/12/18

Changes of insurance conditions and Premium tariffs

Article 11

In the event of changed conditions and tariffs, the Insurer is obligated to inform policy holder in writing or in another suitable way at latest within 30 days before the expiration of current year of insurance. Policy holder may cancel the agreement within 30 days of receiving notice. In this case the agreement shall cease by expiration of the current year of insurance.

If the policy holder does not cancel the agreements as defined in previous paragraph, amended agreement shall be applied to the beginning of the next period of insurance.

Implementation of Terms and conditions for liability insurance and legal regulations

Article 12

For issues that are not regulated with these conditions, provisions of the Terms and conditions for liability insurance, i.e. the Law on obligatory relations shall apply.

For issues regulated contrary to the provisions of the Terms and conditions for liability insurance, the provisions of these conditions shall apply.

Jurisdiction in case of dispute

Article 13

In case of dispute between the policy holder – insurant and insurer, the venue shall be the insurer's domicile.

II FINAL PROVISIONS

Article 14

These conditions may be changed or amended in the way and by procedure according to which they were passed, with the prior obtaining of opinion of the authorized actuary and by informing the Agency for supervision of the insurance of Republic of Montenegro.

The policy holder shall be informed about the changes and amendments of these insurance conditions, in compliance with the law.

These conditions shall take effect as of adoption date

President of the Management Board

03/12/18

Print ratings, research, analysis, and more

MOODY'S
INVESTORS SERVICE

Print Email Export PDF

Rating Action: Moody's affirms Greek banks' deposit ratings at Caa3; upgrades large banks' senior debt ratings and baseline credit assessment

Global Credit Research - 26 Jun 2017

Rating actions follow Greece's upgrade to Caa2 (positive)

Limassol, June 26, 2017 -- Moody's Investors Service (Moody's) has today affirmed the Caa3 long-term deposit ratings of Alpha Bank AE, Eurobank Ergasias S.A., National Bank of Greece S.A., and Piraeus Bank S.A.. At the same time, Moody's has also upgraded all four banks baseline credit assessment (BCA) to caa2 from caa3, the long-term senior unsecured ratings to (P)Caa3 from (P)Ca, and the long-term counterparty risk assessment to Caa2(cr) from Caa3(cr). The long-term deposit ratings for Alpha Bank AE and National Bank of Greece S.A. carry positive outlooks, while those of Eurobank Ergasias S.A. and Piraeus Bank S.A. carry stable outlooks. The long-term deposit ratings of Attica Bank S.A. were affirmed at Caa3 with stable outlook, as well as its BCA of caa3, while the bank's counterparty risk assessment was upgraded to Caa2(cr) from Caa3(cr).

These rating actions follow the successful completion of Greece's second review for its support programme, which also triggered an upgrade of Greece's government bond rating to Caa2 (positive) from Caa3 (stable). The higher BCAs primarily reflect the improved operating environment in Greece, which has resulted in Moody's raising the country's Macro Profile to 'Very Weak+' from 'Very Weak', as well as improvements in banks' funding profile, lower funding costs, the return to marginal core profitability and the likely continuation of this trend in 2017-18. In addition, the BCAs also take into account the prospects for further modest improvements in banks' financial fundamentals stemming from the potential return of more deposits into the banking system and gradual reduction of nonperforming loans, as the economy starts to show signs of recovery.

The affirmation of the banks' Caa3 deposit ratings is primarily driven by the rating agency's 'Loss Given Failure' (LGF) analysis of banks' liability structure and the relatively small pool of unsecured liabilities available to absorb losses in a potential bank resolution scenario. The deposit ratings also reflect the on-going deposit controls in Greece, and the fact that depositors do not have instant access to the full amount of their deposits. The banks' senior unsecured ratings were upgraded to (P)Caa3 from (P)Ca based on the full application of the rating agency's LGF analytical approach following the stabilisation of banks' liability structures. Previously these debt ratings were benchmarked at Ca based on expected losses, following the liability management exercises and exchange offers to senior bondholders that banks carried out in late 2016, as part of their last recapitalisation.

Moody's said that its Greek bank ratings balance the improvements in their credit profiles against the still significant downside risks stemming from the fragile operating environment in Greece and the very high level of nonperforming loans.

A full list of affected ratings is provided at the end of this press release.

RATINGS RATIONALE

UPGRADES OF BCAs TO caa2 FROM caa3

The upgrade of the four Greek banks' BCAs to caa2 from caa3 reflects the following factors:

--- GREECE'S MACRO PROFILE CHANGED TO 'VERY WEAK+' FROM 'VERY WEAK'

Following the sovereign rating upgrade, the macro profile for Greece that is used in Moody's banking scorecards that derive the BCAs has been changed to 'Very Weak+' from 'Very Weak', due to the rating agency's improved view of the country's institutional strength factor. This was primarily triggered by the conclusion of the second review of the country's adjustment programme, and the fact that public institutions in Greece have benefited from the technical assistance provided by the official creditors. Greece's macro profile also reflects the difficult credit and funding conditions, with structural challenges faced by all banks.

--- IMPROVED FUNDING PROFILES

The BCA upgrades also reflect the recent improvements in their funding profiles with the reduction of the high cost Emergency Liquidity Assistance (ELA), which was around €41 billion for the system in May 2017, down from €87 billion in June 2015. Moody's expects further reduction in the banks' dependence on ELA, following the conclusion of the second review of the country's support programme by its official lenders (EC/ECB/ESM/IMF). This development should improve confidence in the banks, resulting in gradual deposit inflows from the approximately €10 billion of cash still placed outside the banking system. The rating agency also expects a gradual relaxation of the capital controls that remain in place in Greece, which allow depositors to withdraw only €840 every two weeks. Full repayment of the ELA is one of Greek banks' top priorities, although this is unlikely to materialise for all four banks over the next 12-18 months. The inter-bank repo market has been available to Greek banks so far, allowing them to partly reduce their ELA balances.

--- BETTER PROFITABILITY PROSPECTS

The BCA upgrades also consider the improved earnings prospects for these banks, following the conclusion of the second review, which will likely enhance investor and depositor confidence, reducing funding costs. Concurrently, Moody's expects that lower funding costs and operating expenses will support pre-provision income in 2017-18, and bottom-line profits will be largely driven by the level of provisioning requirements. During 2016, pre-provision income for the banking system increased by around 32% with almost all banks being marginally profitable, limiting any capital consumption, while the first quarter 2017 results suggest that the improving trend will continue in 2017.

Moody's considers that the BCA of caa2 for all four banks appropriately balances these recent improvements in their standalone credit profiles as well as the considerable downside risks stemming from the still high level of non-performing exposures (NPEs) that were at around 45% of total exposures (including off-balance sheet items) as of March 2017. The rating agency believes that over the next 12-18 months, banks' performance will depend on their ability to reduce the level of NPEs mainly through restructurings that will also generate additional income.

ATTICA BANK BCA AFFIRMED AT caa3

Attica Bank's BCA was affirmed at caa3 reflecting the bank's significant asset quality challenges, with the highest NPE ratio among its peers, as well as its ongoing capital needs that have yet to be fully covered. In addition, the bank is currently undergoing restructuring and has yet to show concrete evidence that it has the capacity to return to sustainable profitability. The rating agency believes that the standalone credit profile of Attica Bank is weaker than its local peers, as reflected by the lower BCA. Moody's said that the higher sovereign rating now allows certain rating differentiation among Greek banks, while prior to this rating action all Greek banks were rated at the same level towards the end of the rating scale. For more details on Attica Bank, please see individual bank section below.

DEPOSIT RATINGS AFFIRMED AT Caa3; OUTLOOK CHANGED TO POSITIVE FROM STABLE FOR TWO BANKS

Related Issuers

Alpha Bank AE

Alpha Credit Group plc

Alpha Group Jersey Limited

Attica Bank S.A.

Emporiki Group Finance Plc

Related Research

Credit Opinion: Eurobank Ergasias S.A.: Semiannual Update

Credit Opinion: National Bank of Greece S.A.: Semiannual Update

Credit Opinion: Piraeus Bank S.A.: Semiannual Update

Credit Opinion: Attica Bank S.A.: Semiannual Update

Credit Opinion: Alpha Bank AE: Semiannual Update

GEORGIOS [illegible]
[illegible]

03/12/18

The affirmation of the banks' Caa3 deposit ratings primarily reflects banks' relatively small pool of unsecured obligations and minima subordinated liabilities available to absorb potential losses in case of a bank resolution scenario. Accordingly, depositors remain vulnerable to bail-in risks within the context of the Bank Recovery and Resolution Directive (BRRD) transposition law that was passed in Greece in 2015. Although Greek depositors were excluded from bail-in in the last few years, Moody's considers that the relative risks are still high and thus positions long-term deposits, senior unsecured debt and subordinated debt at the same rating level of Caa3 based on the rating agency's LGF analysis of banks' liability structure.

The long-term deposit ratings of Caa3 also take into consideration the on-going capital controls in place as well as the implied losses faced by depositors that do not have instant access to the full amount of their funds. All banks' Caa3 deposit ratings are positioned one notch lower than the recently revised local-currency deposit ceiling for Greece of Caa2.

The change in the deposit rating outlook to positive from stable for Alpha Bank and National Bank of Greece reflects the rating agency's opinion of these banks' marginally stronger standalone credit profiles than their peers, and its expectation that going forward their liability structure through more deposits could induce a higher deposit rating. Alpha Bank has a stronger tangible capital position than its peers, while National Bank of Greece has a better funding profile with lower ELA dependence than the other banks. The individual bank sections below provide more details in this respect.

SENIOR AND SUBORDINATED RATINGS UPGRADED TO (P)Caa3 from (P)Ca AND C RESPECTIVELY, JUNIOR INSTRUMENTS AFFIRMED AT C(hyb)

The upgrade of the four banks' senior debt ratings to (P)Caa3 from (P)Ca and subordinated debt ratings to (P)Caa3 from (P)C reflect Moody's loss given failure (LGF) analysis of their liability structure, which indicates that such obligations should be placed at the same level as deposits. This is driven by the relatively thin cushion that banks have on their balance sheets to absorb losses in a potential bank resolution scenario. The rating agency notes that a large proportion of Greek banks' liabilities are in the form secured obligations, either through the ELA mechanism, or the ECB or the inter-bank repo market, limiting the pool of creditors available to absorb losses.

Prior to this rating action, Moody's positioned the ratings of these debt instruments based on an expected loss basis, as part of banks' liability management exercises and voluntary exchange offers towards investors in late 2015, when banks were carrying out their third-round of recapitalization over the last few years. The senior debt ratings outlook is positive for Alpha Bank and National Bank of Greece, and stable for Piraeus Bank and Eurobank.

At the same time, Moody's affirmed the C(hyb) ratings assigned to the two systemic banks' non-cumulative Tier 1 preferred stock. These affirmations were driven by these instruments' structural subordination to senior and subordinated debt, and the higher likelihood that they could sustain significant losses before any senior and subordinated debt holders are affected in a potential bank resolution scenario.

INDIVIDUAL BANKS

— ALPHA BANK

Alpha Bank's BCA upgrade to caa2 from caa3 and its positive rating outlook take into account its relatively high pro-forma common equity Tier 1 (CET1) ratio of 17.3% in March 2017, following the recent sale of its operations in Serbia. Moody's notes that Alpha Bank has the lowest level of eligible deferred tax assets (DTAs) on its balance sheet at around €3.4 billion in March 2017, which comprised around 39% of its nominal CET1 capital. This level positions the bank at the stronger end in terms of loss-absorbing tangible capital available among its local systemic peers, underpinning Alpha Bank's positive rating outlook. Moody's considers such DTAs as a weak form of capital, in view of Greece's low rating.

The bank's ratings also consider its return to positive profitability with a net profit of around €48 million for the first three-months of 2017 while its nonperforming loans (NPL) and nonperforming exposures (NPE) ratio stood at around 38% and 54% respectively as of March 2017. NPL and NPE provisioning coverage was around 69% and 49%, respectively. Moody's believes that the relatively high NPL provisioning coverage provides the bank with more flexibility to actively manage its NPL portfolio. The bank's ELA as of March 2017 stood at €12.2 billion (down from €19.6 billion in December 2015), comprising 19% of its total assets, although Moody's expects this type of funding to reduce further in 2017-18.

— ATTICA BANK

The affirmation of Attica Bank's BCA at caa3 takes into consideration its CET1 ratio of 14.8% in December 2016, but also the fact that this is still short of around €55 million that the bank needs to raise in order to be fully compliant with the Bank of Greece's adverse scenario capital estimate. Moody's understands that the bank has agreed with a potential investor aiming to cover this capital shortfall through a deal that will also involve the management of a pool of NPEs.

The bank, which is the smallest among all rated Greek banks with a market share of only around 2%, reported losses of around €50 million in 2016, as its NPE ratio increased to 61% in December 2016, from 56% in December 2015, which is the highest among local peers. The bank's ELA dependence was around €1 billion as of December 2016, comprising around 28% of its total assets. The rating agency expects that on-going restructuring at the bank by the new top management is likely to start yielding results in 2017-18, although Attica Bank's performance is likely to still lag behind its peers.

— EUROBANK ERGASIAS

Eurobank's BCA of caa2 takes into account its reported CET1 ratio of 17.3% in March 2017, up from 16.5% in March 2016. Nonetheless, Moody's considers the bank to have a lower quality of capital than its peers, in view of its eligible DTAs (€4 billion) and the state preference shares of around €950 million that the bank retains on its balance sheet and will need to repay at some stage. The rating agency estimates that around 75% of the bank's nominal CET1 capital is in the form of either eligible DTAs or preference shares, leaving minimal loss-absorbing tangible common equity available.

The bank's profit in the first three months of 2017 amounted to around €37 million, while its NPL and NPE ratio were at around 35% and 45%, respectively, as of March 2017. Eurobank's NPL and NPE provisioning coverage was around 66% and 51%, respectively. The bank's ELA as of March 2017 stood at €12.2 billion, comprising around 19% of its total assets, although Moody's notes that the bank was able to reduce this ELA dependence significantly from €22.9 billion in June 2015.

— NATIONAL BANK OF GREECE

The bank's BCA upgrade to caa2 from caa3 and its positive rating outlook takes into consideration its strong savings franchise in Greece, and its ELA balance that was the lowest among its peers at €5.6 billion, comprising 7.4% of its total assets as of March 2017. Moody's expects NBG to be the first bank in Greece to fully repay its ELA in the next 12-18 months, mainly through the sale of its foreign subsidiaries and its insurance arm and through more customer deposits.

National Bank of Greece (NBG) had a pro-forma CET1 ratio, incorporating the recent sale of its Bulgarian operations, of 17% in March 2017 from 16.3% in December 2016. However, this healthy regulatory ratio is undermined by the bank's high eligible DTAs (€4.8 billion), which comprised around 73% of its nominal CET1 capital as of March 2017. NBG is likely to further enhance its CET1 capital through the sale of more non-core assets going forward.

The bank's NPL and NPE ratios in Greece stood at 33% and 44%, respectively as of March 2017, while the NPL and NPE provisioning coverage was 75% and 57%, the highest within its local peer group. The rating agency believes that recoveries from the NPL portfolio could further enhance the bank's core pre-provision income, which increased by 30% year-on-year in the first three-months of 2017, combined with further reduction in its operating expenses.

— PIRAEUS BANK

Piraeus Bank's BCA of caa2 considers its increased CET1 ratio to 16.8% in March 2017 from 11.2% in September 2015, including the €2 billion CoCos that the bank still retains but will have to repay back to the state-owned Hellenic Financial Stability Fund (HFSF) at some stage. The bank's eligible DTAs (€4.1 billion) comprised around 60% of its nominal CET1 capital, excluding its CoCos, undermining the quality of its capital position.

Moody's considers Piraeus Bank's asset quality position to be among the weakest in the system due to its numerous take-overs of smaller problematic banks in the last few years, which resulted in an NPL and NPE ratio of around 38% and 55%, respectively, as of March 2017. In addition, the bank's NPL and NPE provisioning coverage was at 68% and 46%, respectively. However, the rating agency expects the bank's

GEORGIOS KARKANIAS
PRESIDENT

03/12/18

asset quality to gradually improve in view of its focus and active management of its NPLs, and the additional tools provided to the banks for managing their NPLs through recent legislative measures. The bank reported a net loss of around €6 million during the first three-months of 2017, although Moody's positively views the bank's ability to increase its pre-provision income by 11% year-on-year.

WHAT COULD MOVE THE RATINGS UP/DOWN

Over time, upward deposit and senior debt rating pressure could arise following a stabilisation of the country's macro-economic environment combined with an improvement in banks' asset quality, profitability and funding. The return of more deposits back to the banking system would also increase the pool of unsecured obligations available to banks, which could trigger a deposit and senior debt rating upgrade driven by the rating agency's LGF approach.

Greek banks' deposit and senior debt ratings could be downgraded in the event of political turmoil in the country for an extended period of time that substantially affects domestic consumption and economic activity, which have gradually been recovering from a very low base.

The principal methodology used in these ratings was Banks published in January 2016. Please see the Rating Methodologies page on www.moodys.com for a copy of this methodology.

THE SPECIFIC RATING ACTIONS IMPLEMENTED TODAY ARE AS FOLLOWS:

Upgrades:

..Issuer: Alpha Bank AE

.... Senior Unsecured MTN, Upgraded to (P)Caa3 from (P)Ca

.. BACKED (Government) Senior Unsecured MTN, Upgraded to (P)Caa2 from (P)Caa3

.... Subordinate MTN, Upgraded to (P)Caa3 from (P)C

... Adjusted Baseline Credit Assessment, Upgraded to caa2 from caa3

.... Baseline Credit Assessment, Upgraded to caa2 from caa3

.... Counterparty Risk Assessment, Upgraded to Caa2(cr) from Caa3(cr)

..Issuer: Alpha Credit Group plc

.... BACKED Senior Unsecured Regular Bond/Debenture, Upgraded to Caa3 Positive from Ca Stable (Assumed by Alpha Bank AE)

.... BACKED Subordinate Regular Bond/Debenture, Upgraded to Caa3 from C (Assumed by Alpha Bank AE)

.... BACKED Subordinate MTN, Upgraded to (P)Caa3 from (P)C

.... BACKED Senior Unsecured MTN, Upgraded to (P)Caa3 from (P)Ca

..Issuer: Alpha Group Jersey Limited

.... BACKED Senior Unsecured MTN, Upgraded to (P)Caa3 from (P)Ca

... BACKED Subordinate MTN, Upgraded to (P)Caa3 from (P)C

..Issuer: Emporiki Group Finance Plc

.... BACKED Senior Unsecured Regular Bond/Debenture, Upgraded to Caa3 Positive from Ca Stable (Assumed by Alpha Bank AE)

..Issuer: Attica Bank S.A.

... Counterparty Risk Assessment, Upgraded to Caa2(cr) from Caa3(cr)

..Issuer: European Reliance S.A.

... Senior Unsecured MTN, Upgraded to (P)Caa3 from (P)Ca

.... BACKED (Government) Senior Unsecured MTN, Upgraded to (P)Caa2 from (P)Caa3

.... Subordinate MTN, Upgraded to (P)Caa3 from (P)C

... Adjusted Baseline Credit Assessment, Upgraded to caa2 from caa3

.... Baseline Credit Assessment, Upgraded to caa2 from caa3

.... Counterparty Risk Assessment, Upgraded to Caa2(cr) from Caa3(cr)

..Issuer: ERB Hellas (Cayman Islands) Limited

.... BACKED Senior Unsecured MTN, Upgraded to (P)Caa3 from (P)Ca

... BACKED Subordinate MTN, Upgraded to (P)Caa3 from (P)C

..Issuer: ERB Hellas PLC

.... BACKED Senior Unsecured Regular Bond/Debenture, Upgraded to Caa3 Stable from Ca Stable

.... BACKED Subordinate Regular Bond/Debenture, Upgraded to Caa3 from C

.... BACKED Senior Unsecured MTN, Upgraded to (P)Caa3 from (P)Ca

... BACKED Subordinate MTN, Upgraded to (P)Caa3 from (P)C

..Issuer: National Bank of Greece S.A.

.... BACKED (Government) Senior Unsecured MTN, Upgraded to (P)Caa2 from (P)Caa3

.... Adjusted Baseline Credit Assessment, Upgraded to caa2 from caa3

.... Baseline Credit Assessment, Upgraded to caa2 from caa3

.... Counterparty Risk Assessment, Upgraded to Caa2(cr) from Caa3(cr)

..Issuer: NBG Finance plc

.... BACKED Senior Unsecured MTN, Upgraded to (P)Caa3 from (P)Ca

.... BACKED Subordinate MTN, Upgraded to (P)Caa3 from (P)C

..Issuer: Piraeus Bank S.A.

.... Senior Unsecured MTN, Upgraded to (P)Caa3 from (P)Ca

.... Subordinate MTN, Upgraded to (P)Caa3 from (P)C

ΓΕΩΡΓΙΟΣ ΚΑΡΑΤΖΑΣ
ΠΡΟΕΔΡΟΣ

07/12/18

.... Adjusted Baseline Credit Assessment, Upgraded to caa2 from caa3

.... Baseline Credit Assessment, Upgraded to caa2 from caa3

.... Counterparty Risk Assessment, Upgraded to Caa2(cr) from Caa3(cr)

..Issuer: Piraeus Group Finance Plc

.... BACKED Senior Unsecured MTN, Upgraded to (P)Caa3 from (P)Ca

.... BACKED Subordinate MTN, Upgraded to (P)Caa3 from (P)C

Affirmations:

..Issuer: Alpha Bank AE

.... LT Bank Deposits, Affirmed Caa3 Positive From Stable

.... ST Bank Deposits, Affirmed NP

....Other Short Term, Affirmed (P)NP

.... Counterparty Risk Assessment, Affirmed NP(cr)

..Issuer: Alpha Credit Group plc

.... BACKED Other Short Term, Affirmed (P)NP

.... BACKED Commercial Paper, Affirmed NP

..Issuer: Alpha Group Jersey Limited

.... BACKED Pref. Stock Non-cumulative, Affirmed C (hyb)

..Issuer: Attica Bank S.A.

.... LT Bank Deposits, Affirmed Caa3 Stable

.... ST Bank Deposits, Affirmed NP

.... Adjusted Baseline Credit Assessment, Affirmed caa3

.... Baseline Credit Assessment, Affirmed caa3

.... Counterparty Risk Assessment, Affirmed NP(cr)

..Issuer: Eurobank Ergasias S.A.

.... LT Bank Deposits, Affirmed Caa3 Stable

.... ST Bank Deposits, Affirmed NP

.... Other Short Term, Affirmed (P)NP

.... BACKED Other Short Term, Affirmed (P)NP

.... Counterparty Risk Assessment, Affirmed NP(cr)

..Issuer: ERB Hellas (Cayman Islands) Limited

.... BACKED Other Short Term, Affirmed (P)NP

..Issuer: ERB Hellas Funding Limited

.... BACKED Pref. Stock Non-cumulative, Affirmed C (hyb)

..Issuer: ERB Hellas PLC

.... BACKED Commercial Paper, Affirmed NP

.... BACKED Other Short Term, Affirmed (P)NP

..Issuer: National Bank of Greece S.A.

.... LT Bank Deposits, Affirmed Caa3 Positive From Stable

.... ST Bank Deposits, Affirmed NP

.... BACKED Other Short Term, Affirmed (P)NP

.... Counterparty Risk Assessment, Affirmed NP(cr)

..Issuer: Piraeus Bank S.A.

.... LT Bank Deposits, Affirmed Caa3 Stable

.... ST Bank Deposits, Affirmed NP

.... Counterparty Risk Assessment, Affirmed NP(cr)

..Issuer: Piraeus Group Finance Plc

.... BACKED Other Short Term, Affirmed (P)NP

.... BACKED Commercial Paper, Affirmed NP

Outlook Actions:

..Issuer: Alpha Bank AE

....Outlook, Changed To Positive From Stable

..Issuer: Attica Bank S.A.

....Outlook, Remains Stable

..Issuer: Eurobank Ergasias S.A.

....Outlook, Remains Stable

GEORGIOS KARKANIAS
PRESIDENT

03/12/18

..Issuer: National Bank of Greece S.A

....Outlook, Changed To Positive From Stable

..Issuer: Piraeus Bank S.A

....Outlook, Remains Stable

REGULATORY DISCLOSURES

For ratings issued on a program, series or category/class of debt, this announcement provides certain regulatory disclosures in relation to each rating of a subsequently issued bond or note of the same series or category/class of debt or pursuant to a program for which the ratings are derived exclusively from existing ratings in accordance with Moody's rating practices. For ratings issued on a support provider, this announcement provides certain regulatory disclosures in relation to the credit rating action on the support provider and in relation to each particular credit rating action for securities that derive their credit ratings from the support provider's credit rating. For provisional ratings, this announcement provides certain regulatory disclosures in relation to the provisional rating assigned, and in relation to a definitive rating that may be assigned subsequent to the final issuance of the debt, in each case where the transaction structure and terms have not changed prior to the assignment of the definitive rating in a manner that would have affected the rating. For further information please see the ratings tab on the issuer/entity page for the respective issuer on www.moodys.com

For any affected securities or rated entities receiving direct credit support from the primary entity(ies) of this credit rating action, and whose ratings may change as a result of this credit rating action, the associated regulatory disclosures will be those of the guarantor entity. Exceptions to this approach exist for the following disclosures, if applicable to jurisdiction: Ancillary Services, Disclosure to rated entity, Disclosure from rated entity.

Regulatory disclosures contained in this press release apply to the credit rating and, if applicable, the related rating outlook or rating review.

Please see www.moodys.com for any updates on changes to the lead rating analyst and to the Moody's legal entity that has issued the rating.

Please see the ratings tab on the issuer/entity page on www.moodys.com for additional regulatory disclosures for each credit rating.

Nondas Nicolaides
VP - Senior Credit Officer
Financial Institutions Group
Moody's Investors Service Cyprus Ltd.
Porto Bello Building
1, Siafi Street, 3042 Limassol
PO Box 53265
Limassol CY 3301
Cyprus
JOURNALISTS: 852 3758 1350
Client Service: 44 20 7772 5454

Sean Marion
MD - Financial Institutions
Financial Institutions Group
JOURNALISTS: 44 20 7772 5456
Client Service: 44 20 7772 5454

Releasing Office:
Moody's Investors Service Cyprus Ltd
Porto Bello Building
1, Siafi Street, 3042 Limassol
PO Box 53265
Limassol CY 3301
Cyprus
JOURNALISTS: 852 3758 1350
Client Service: 44 20 7772 5454

MOODY'S
INVESTORS SERVICE

© 2017 Moody's Corporation, Moody's Investors Service, Inc., Moody's Analytics, Inc. and/or their licensors and affiliates (collectively, "MOODY'S"). All rights reserved.

CREDIT RATINGS ISSUED BY MOODY'S INVESTORS SERVICE, INC. AND ITS RATINGS AFFILIATES ("MIS") ARE MOODY'S CURRENT OPINIONS OF THE RELATIVE FUTURE CREDIT RISK OF ENTITIES, CREDIT COMMITMENTS, OR DEBT OR DEBT-LIKE SECURITIES, AND MOODY'S PUBLICATIONS MAY INCLUDE MOODY'S CURRENT OPINIONS OF THE RELATIVE FUTURE CREDIT RISK OF ENTITIES, CREDIT COMMITMENTS, OR DEBT OR DEBT-LIKE SECURITIES. MOODY'S DEFINES CREDIT RISK AS THE RISK THAT AN ENTITY MAY NOT MEET ITS CONTRACTUAL, FINANCIAL OBLIGATIONS AS THEY COME DUE AND ANY ESTIMATED FINANCIAL LOSS IN THE EVENT OF DEFAULT. CREDIT RATINGS DO NOT ADDRESS ANY OTHER RISK, INCLUDING BUT NOT LIMITED TO: LIQUIDITY RISK, MARKET VALUE RISK, OR PRICE VOLATILITY. CREDIT RATINGS AND MOODY'S OPINIONS INCLUDED IN MOODY'S PUBLICATIONS ARE NOT STATEMENTS OF CURRENT OR HISTORICAL FACT. MOODY'S PUBLICATIONS MAY ALSO INCLUDE QUANTITATIVE MODEL-BASED ESTIMATES OF CREDIT RISK AND RELATED OPINIONS OR COMMENTARY PUBLISHED BY MOODY'S ANALYTICS, INC. CREDIT RATINGS AND MOODY'S PUBLICATIONS DO NOT CONSTITUTE OR PROVIDE INVESTMENT OR FINANCIAL ADVICE, AND CREDIT RATINGS AND MOODY'S PUBLICATIONS ARE NOT AND DO NOT PROVIDE RECOMMENDATIONS TO PURCHASE, SELL, OR HOLD PARTICULAR SECURITIES. NEITHER CREDIT RATINGS NOR MOODY'S PUBLICATIONS COMMENT ON THE SUITABILITY OF AN INVESTMENT FOR ANY PARTICULAR INVESTOR. MOODY'S ISSUES ITS CREDIT RATINGS AND PUBLISHES MOODY'S PUBLICATIONS WITH THE EXPECTATION AND UNDERSTANDING THAT EACH INVESTOR WILL, WITH DUE CARE, MAKE ITS OWN STUDY AND EVALUATION OF EACH SECURITY THAT IS UNDER CONSIDERATION FOR PURCHASE, HOLDING, OR SALE.

MOODY'S CREDIT RATINGS AND MOODY'S PUBLICATIONS ARE NOT INTENDED FOR USE BY RETAIL INVESTORS AND IT WOULD BE RECKLESS AND INAPPROPRIATE FOR RETAIL INVESTORS TO USE MOODY'S CREDIT RATINGS OR MOODY'S PUBLICATIONS WHEN MAKING AN INVESTMENT DECISION. IF IN DOUBT YOU SHOULD CONTACT YOUR FINANCIAL OR OTHER PROFESSIONAL ADVISER.

ALL INFORMATION CONTAINED HEREIN IS PROTECTED BY LAW, INCLUDING BUT NOT LIMITED TO, COPYRIGHT LAW, AND NONE OF SUCH INFORMATION MAY BE COPIED OR OTHERWISE REPRODUCED, REPACKAGED, FURTHER TRANSMITTED, TRANSFERRED, DISSEMINATED, REDISTRIBUTED OR RESOLD, OR STORED FOR SUBSEQUENT USE FOR ANY SUCH PURPOSE, IN WHOLE OR IN PART, IN ANY FORM OR MANNER OR BY ANY MEANS WHATSOEVER, BY ANY PERSON WITHOUT MOODY'S PRIOR WRITTEN CONSENT.

All information contained herein is obtained by MOODY'S from sources believed by it to be accurate and reliable. Because of the possibility of human or mechanical error as well as other factors, however, all information contained herein is provided "AS IS" without warranty of any kind. MOODY'S adopts all necessary measures so that the information it uses in assigning a credit rating is of sufficient quality and from sources MOODY'S considers to be reliable including, when appropriate, independent third-party sources. However, MOODY'S is not an auditor and cannot in every instance independently verify or validate information received in the rating process or in preparing the Moody's publications.

To the extent permitted by law, MOODY'S and its directors, officers, employees, agents, representatives, licensors and suppliers disclaim liability to any person or entity for any indirect, special, consequential, or incidental losses or damages whatsoever arising from or in connection with the information contained herein or the use of or inability to use any such information, even if MOODY'S or any of its directors, officers, employees, agents, representatives, licensors or suppliers is advised in advance of the possibility of such losses or damages, including but not limited to: loss of profits or prospective profits or goodwill, loss or damage arising where the relevant financial instrument is not the subject of a particular credit rating assigned by MOODY'S.

To the extent permitted by law, MOODY'S and its directors, officers, employees, agents, representatives, licensors and suppliers disclaim liability for any direct or compensatory losses or damages caused to any person or entity, including but not limited to by any negligence (but excluding fraud, willful misconduct or any other type of liability that, for the avoidance of doubt, by law cannot be excluded) on the part of, or any contingency within or beyond

ΑΝΔΡΕΟΣ ΙΑΚΩΒΙΔΗΣ
ΔΙΕΡΜΗΝΕΥΤΗΣ

3/8

03/12/18

the contrary, MOODY'S or any of its directors, officers, employees, agents, representatives, licensors or suppliers, arising from or in connection with the information contained herein or the use of or inability to use any such information.

NO WARRANTY, EXPRESS OR IMPLIED, AS TO THE ACCURACY, TIMELINESS, COMPLETENESS, MERCHANTABILITY OR FITNESS FOR ANY PARTICULAR PURPOSE OF ANY SUCH RATING OR OTHER OPINION OR INFORMATION IS GIVEN OR MADE BY MOODY'S IN ANY FORM OR MANNER WHATSOEVER.

Moody's Investors Service, Inc., a wholly-owned credit rating agency subsidiary of Moody's Corporation ("MCO"), hereby discloses that most issuers of debt securities (including corporate and municipal bonds, debentures, notes and commercial paper) and preferred stock rated by Moody's Investors Service, Inc. have, prior to assignment of any rating, agreed to pay to Moody's Investors Service, Inc. for appraisal and rating services rendered by it fees ranging from $1,500 to approximately $2,500,000. MCO and MIS also maintain policies and procedures to address the independence of MIS's ratings and rating processes. Information regarding certain affiliations that may exist between directors of MCO and rated entities, and between entities who hold ratings from MIS and have also publicly reported to the SEC an ownership interest in MCO of more than 5%, is posted annually at www.moodys.com under the heading "Investor Relations — Corporate Governance — Director and Shareholder Affiliation Policy."

Additional terms for Australia only: Any publication into Australia of this document is pursuant to the Australian Financial Services License of MOODY'S affiliate, Moody's Investors Service Pty Limited ABN 61 003 399 657AFSL 336969 and/or Moody's Analytics Australia Pty Ltd ABN 94 105 136 972 AFSL 383569 (as applicable). This document is intended to be provided only to "wholesale clients" within the meaning of section 761G of the Corporations Act 2001. By continuing to access this document from within Australia, you represent to MOODY'S that you are, or are accessing the document as a representative of, a "wholesale client" and that neither you nor the entity you represent will directly or indirectly disseminate this document or its contents to "retail clients" within the meaning of section 761G of the Corporations Act 2001. MOODY'S credit rating is an opinion as to the creditworthiness of a debt obligation of the issuer, not on the equity securities of the issuer or any form of security that is available to retail investors. It would be reckless and inappropriate for retail investors to use MOODY'S credit ratings or publications when making an investment decision. If in doubt you should contact your financial or other professional adviser.

Additional terms for Japan only: Moody's Japan K.K. ("MJKK") is a wholly-owned credit rating agency subsidiary of Moody's Group Japan G.K., which is wholly-owned by Moody's Overseas Holdings Inc., a wholly-owned subsidiary of MCO. Moody's SF Japan K.K. ("MSFJ") is a wholly-owned credit rating agency subsidiary of MJKK. MSFJ is not a Nationally Recognized Statistical Rating Organization ("NRSRO"). Therefore, credit ratings assigned by MSFJ are Non-NRSRO Credit Ratings. Non-NRSRO Credit Ratings are assigned by an entity that is not a NRSRO and, consequently, the rated obligation will not qualify for certain types of treatment under U.S. laws. MJKK and MSFJ are credit rating agencies registered with the Japan Financial Services Agency and their registration numbers are FSA Commissioner (Ratings) No. 2 and 3 respectively.

MJKK or MSFJ (as applicable) hereby discloses that most issuers of debt securities (including corporate and municipal bonds, debentures, notes and commercial paper) and preferred stock rated by MJKK or MSFJ (as applicable) have, prior to assignment of any rating, agreed to pay to MJKK or MSFJ (as applicable) for appraisal and rating services rendered by it fees ranging from JPY200,000 to approximately JPY350,000,000.

MJKK and MSFJ also maintain policies and procedures to address Japanese regulatory requirements.

Moody's Integrity Hotline

EU
001-800-508-1440

Japan
KDDI: 00-539-111 then 866-320-1668
NTT: 0034-811-001 then 866-320-1668

Outside of the EU and Japan
+1-866-330-MDYS (6397)

Browse By
Home
Research & Ratings
Products & Solutions
News & Events
Careers

Contact Us
Help & Support
Contact Us
Submit a Complaint

Terms & Conditions
Terms of Use
Privacy Policy
Proprietary Rights

© 2017 Moody's Investors Service, Inc., Moody's Analytics, Inc. and/or their affiliates and licensors. All rights reserved.

Reported Stats: Global

GEORGIOS [illegible]
PRESIDENT

03/12/18

Piraeus Bank S.A.

Ticker: TPEIR Moody's Org ID: 600044265 Market Segment: Financial Institutions Industry: NON-U.S. BANK
Domicile: GREECE

ANALYST

Analyst: Nondas Nicolaides

INTERACTIVE SCORECARD

Create scenarios and peer benchmarks

LONG TERM DEBT
Rating: (P)Caa3, Not on Watch
Type: Senior Unsecured MTN - Dom Curr
Date: 26 Jun 2017

LONG TERM DEPOSIT
Rating: Caa3, Not on Watch
Type: LT Bank Deposits - Fgn Curr
Outlook: Stable
Date: 26 Jun 2017

SHORT TERM DEPOSIT
Rating: NP, Not on Watch
Type: ST Bank Deposits - Fgn Curr
Date: 26 Jun 2017

COUNTERPARTY RISK ASSESSMENT
Long-term: Caa2(cr), Not on Watch
Short-term: NP(cr), Not on Watch

BASELINE CREDIT ASSESSMENT
Rating: caa2, Not on Watch
Date: 26 Jun 2017

ADJ BASELINE CREDIT ASSESSMENT
Rating: caa2, Not on Watch
Date: 26 Jun 2017

OTHER DEBTS ON WATCH?
No

Research | Ratings | Family Tree | Market Signals

Rating Class Detail | Debt List | Issuer Outlook

Scorecard | Export (CSV) | Results: 10

Class	Rating	Rating Action	Date	Outlook
LT Bank Deposits (Foreign)	Caa3	RATING AFFIRMATION	26 Jun 2017	Stable
Subordinate MTN (Domestic)	(P)Caa3	Upgrade	26 Jun 2017	
Senior Unsecured MTN (Domestic)	(P)Caa2	Upgrade	26 Jun 2017	
ST Bank Deposits (Domestic)	NP	RATING AFFIRMATION	26 Jun 2017	
ST Bank Deposits (Foreign)	NP	RATING AFFIRMATION	26 Jun 2017	
Baseline Credit Assessment	caa2	Upgrade	26 Jun 2017	

Rating Class History: ST Bank Deposits (Foreign)

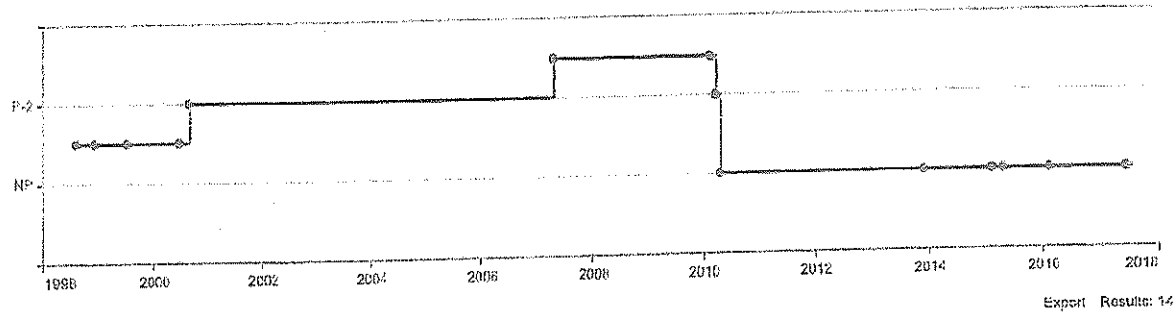

Export Results: 14

Date	Currency	Rating	Rating Action
26 Jun 2017	Foreign	NP	RATING AFFIRMATION
19 Feb 2016	Foreign	NP	RATING AFFIRMATION
30 Apr 2015	Foreign	NP	RATING AFFIRMATION
09 Feb 2015	Foreign	NP	RATING AFFIRMATION
06 Dec 2013	Foreign	NP	RATING AFFIRMATION
30 Apr 2010	Foreign	NP	Downgrade
31 Mar 2010	Foreign	P-2	Downgrade
03 Mar 2010	Foreign	P-1	On Watch - Possible Downgrade
24 Apr 2007	Foreign	P-1	Upgrade
01 Sep 2000	Foreign	P-2	Upgrade
23 Jun 2000	Foreign	P-3	On Watch - Possible Upgrade
07 Jul 1999	Foreign	P-3	CONFIRMED
30 Nov 1998	Foreign	P-3	CONFIRMED
06 Aug 1998	Foreign	P-3	New

For credit ratings that are derived exclusively from an existing credit rating of a program, series, category/class of debt, support provider or primary rated entity, or that replace a previously assigned provisional rating at the same rating level, Moody's publishes a rating announcement on that series, category/class of debt or program as a whole, on the support provider or primary rated entity, or on the provisional rating, but often does not publish a specific rating announcement on each subsequent bond or note for which the credit rating is derived from the existing credit rating. Rating announcements are usually press releases classified as Rating Actions on www.moodys.com. Please refer to the Research tab on the issuer/entity page for the rating announcement.

GEORGIOS [illegible]
PRESIDENT

03/12/18

Japan
KDDI: 00-539-111 then 888-320-1668
NTT: 0034-811-001 then 888-320-1668

Outside of the EU and Japan
1-866-330-MDYS (6397)

Products & Solutions
News & Events
Careers

Submit a Complaint

Proprietary Rights

© 2017 Moody's Investors Service, Inc., Moody's Analytics, Inc. and/or their affiliates and licensors. All rights reserved.

Regional Sites: Global

GEORGIOS KAKKANIAS
PRESIDENT

03/12/18

About Moody's Careers | Regulatory Affairs | Terms of Use | Contact Us

Find ratings, research, analysts and more GO

Welcome VASILIKI KARKANIA. Profile

Research & Ratings Products & Solutions News & Events

My Portfolios | My Alerts My Events Log Out

Piraeus Bank S.A.

Ticker: TPEIR Moody's Org ID: 600044265 Market Segment: Financial Institutions Industry: NON-U.S. BANK
Domicile: GREECE

ANALYST

Analyst: Nondas Nicolaides

INTERACTIVE SCORECARD

Create scenarios and peer benchmarks

LONG TERM DEBT
Rating: (P)Caa3, Not on Watch
Type: Senior Unsecured MTN - Dom Curr
Date: 26 Jun 2017

LONG TERM DEPOSIT
Rating: Caa3, Not on Watch
Type: LT Bank Deposits - Fgn Curr
Outlook: Stable
Date: 26 Jun 2017

SHORT TERM DEPOSIT
Rating: NP, Not on Watch
Type: ST Bank Deposits - Fgn Curr
Date: 26 Jun 2017

COUNTERPARTY RISK ASSESSMENT
Long-term: Caa2(cr), Not on Watch
Short-term: NP(cr), Not on Watch

BASELINE CREDIT ASSESSMENT
Rating: caa2, Not on Watch
Date: 26 Jun 2017

ADJ BASELINE CREDIT ASSESSMENT
Rating: caa2, Not on Watch
Date: 26 Jun 2017

OTHER DEBTS ON WATCH?
No

Research | Ratings | Family Tree | Market Signals

Rating Class Detail | Debt List | Issuer Outlook

Scorecard | Export (CSV) | Results: 10

Class	Rating	Rating Action	Date	Outlook
Counterparty Risk Assessment	Caa2(cr)	Upgrade	26 Jun 2017	
Counterparty Risk Assessment	NP(cr)	RATING AFFIRMATION	26 Jun 2017	
LT Bank Deposits (Domestic)	Caa3	RATING AFFIRMATION	26 Jun 2017	Stable
LT Bank Deposits (Foreign)	Caa3	RATING AFFIRMATION	26 Jun 2017	Stable
Subordinate MTN (Domestic)	(P)Caa3	Upgrade	26 Jun 2017	
Senior Unsecured MTN (Domestic)	(P)Caa3	Upgrade	26 Jun 2017	

Rating Class History: LT Bank Deposits (Foreign)

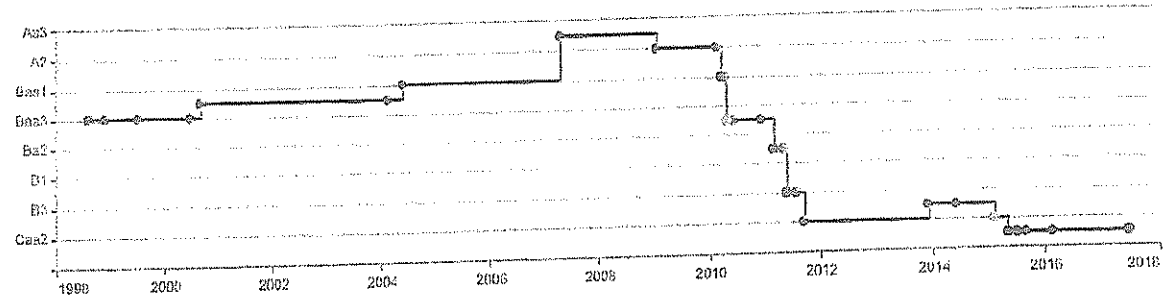

Single Rating Multiple Ratings*

*This debt class has multiple ratings. For more details, check the Debt List.

Export Results: 30

Date	Currency	Rating	Rating Action
26 Jun 2017	Foreign	Caa3	RATING AFFIRMATION
19 Feb 2016	Foreign	Caa3	RATING AFFIRMATION
04 Sep 2015	Foreign	Caa3	CONFIRMED
02 Jul 2015	Foreign	Caa3	On Watch - Possible Downgrade
30 Apr 2015	Foreign	Caa3	Downgrade
09 Feb 2015	Foreign	Caa2	On Watch - Possible Downgrade
09 Feb 2015	Foreign	Caa2	Downgrade
29 May 2014	Foreign	Caa1	RATING AFFIRMATION
06 Dec 2013	Foreign	Caa1	Upgrade
23 Sep 2011	Foreign	Caa2	Downgrade
25 Jul 2011	Foreign	B3	On Watch - Possible Downgrade
03 Jun 2011	Foreign	B3	Downgrade
10 May 2011	Foreign	Ba3	On Watch - Possible Downgrade
09 Mar 2011	Foreign	Ba3	Downgrade
17 Dec 2010	Foreign	Ba1	On Watch - Possible Downgrade
15 Jun 2010	Foreign	Ba1	CONFIRMED
30 Apr 2010	Foreign	Ba1	Downgrade
30 Apr 2010	Foreign	Baa1	On Watch - Possible Downgrade
23 Apr 2010	Foreign	Baa1	On Watch - Possible Downgrade
31 Mar 2010	Foreign	Baa1	Downgrade
03 Mar 2010	Foreign	A2	On Watch - Possible Downgrade
03 Feb 2009	Foreign	A2	Downgrade
24 Apr 2007	Foreign	A1	Upgrade

GEORGIOS KARAMITAS
NOTARY PUBLIC

03/12/18

03 Jun 2004	Foreign	Ba1	Upgrade
27 Feb 2004	Foreign	Ba2	On Watch - Possible Upgrade
01 Sep 2000	Foreign	Ba2	Upgrade
23 Jun 2000	Foreign	Ba3	On Watch - Possible Upgrade
07 Jul 1999	Foreign	Ba3	CONFIRMED
30 Nov 1998	Foreign	Ba3	CONFIRMED
06 Aug 1998	Foreign	Baa3	New

For credit ratings that are derived exclusively from an existing credit rating of a program, series, category/class of debt, support provider or primary rated entity, or that replace a previously assigned provisional rating at the same rating level, Moody's publishes a rating announcement on that series, category/class of debt or program as a whole, on the support provider or primary rated entity, or on the provisional rating, but often does not publish a specific rating announcement on each subsequent bond or note for which the credit rating is derived from the existing credit rating. Rating announcements are usually press releases classified as Rating Actions on www.moodys.com. Please refer to the Research tab on the issuer/entity page for the rating announcement.

Moody's Integrity Hotline

EU
001-800-506-1440

Japan
KDDI: 00-539-111 then 888-320-1668
NTT: 0034-811-001 then 888-320-1668

Outside of the EU and Japan
1-866-330-MDYS (6397)

Browse By
Home
Research & Ratings
Products & Solutions
News & Events
Careers

Contact Us
Help & Support
Contact Us
Submit a Complaint

Terms & Conditions
Terms of Use
Privacy Policy
Proprietary Rights

© 2017 Moody's Investors Service, Inc., Moody's Analytics, Inc. and/or their affiliates and licensors. All rights reserved.

Regional Sites: Global

GEORGIOS KARKANIAS
PRESIDENT

03/12/18

Piraeus Bank S.A.

Ticker: TPEIR Moody's Org ID: 600044265 Market Segment: Financial Institutions Industry: NON-U.S. BANK
Domicile: GREECE

ANALYST

Analyst: Nondas Nicolaides

LONG TERM DEBT
Rating: (P)Caa3, Not on Watch
Type: Senior Unsecured MTN - Dom Curr
Date: 26 Jun 2017

LONG TERM DEPOSIT
Rating: Caa3, Not on Watch
Type: LT Bank Deposits - Fgn Curr
Outlook: Stable
Date: 26 Jun 2017

SHORT TERM DEPOSIT
Rating: NP, Not on Watch
Type: ST Bank Deposits - Fgn Curr
Date: 26 Jun 2017

INTERACTIVE SCORECARD

Create scenarios and peer benchmarks

COUNTERPARTY RISK ASSESSMENT
Long-term: Caa2(cr), Not on Watch
Short-term: NP(cr), Not on Watch

BASELINE CREDIT ASSESSMENT
Rating: caa2, Not on Watch
Date: 26 Jun 2017

ADJ BASELINE CREDIT ASSESSMENT
Rating: caa2, Not on Watch
Date: 26 Jun 2017

OTHER DEBTS ON WATCH?
No

Research | Ratings | Family Tree | Market Signals

Rating Class Detail | Debt List | Issuer Outlook

Scorecard | Export (CSV) | Results: 10

Class	Rating	Rating Action	Date	Outlook
LT Bank Deposits (Foreign)	Caa3	RATING AFFIRMATION	26 Jun 2017	Stable
Subordinate MTN (Domestic)	(P)Caa3	Upgrade	26 Jun 2017	
Senior Unsecured MTN (Domestic)	(P)Caa3	Upgrade	26 Jun 2017	
ST Bank Deposits (Domestic)	NP	RATING AFFIRMATION	26 Jun 2017	
ST Bank Deposits (Foreign)	NP	RATING AFFIRMATION	26 Jun 2017	
Baseline Credit Assessment	caa2	Upgrade	26 Jun 2017	

Rating Class History: ST Bank Deposits (Domestic)

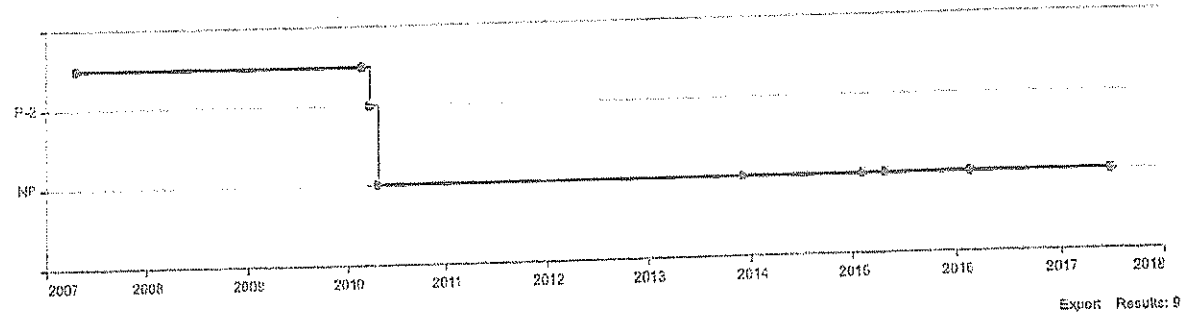

Export Results: 9

Date	Currency	Rating	Rating Action
26 Jun 2017	Domestic	NP	RATING AFFIRMATION
19 Feb 2016	Domestic	NP	RATING AFFIRMATION
30 Apr 2015	Domestic	NP	RATING AFFIRMATION
09 Feb 2015	Domestic	NP	RATING AFFIRMATION
05 Dec 2013	Domestic	NP	Downgrade
30 Apr 2010	Domestic	NP	Downgrade
31 Mar 2010	Domestic	P-2	On Watch - Possible Downgrade
08 Mar 2010	Domestic	P-1	New
24 Apr 2007	Domestic	P-1	

For credit ratings that are derived exclusively from an existing credit rating of a program, series, category/class of debt, support provider or primary rated entity, or that replace a previously assigned provisional rating at the same rating level, Moody's publishes a rating announcement on that series, category/class of debt or program as a whole, on the support provider or primary rated entity, or on the provisional rating, but often does not publish a specific rating announcement on each subsequent bond or note for which the credit rating is derived from the existing credit rating. Rating announcements are usually press releases classified as Rating Actions on www.moodys.com. Please refer to the Research tab on the issuer/entity page for the rating announcement.

GEORGIOS KARANIAS
PRESIDENT

03/12/18

Piraeus Bank S.A.

Ticker: TPEIR Moody's Org ID: 600044265 Market Segment: Financial Institutions Industry: NON-U.S. BANK
Domicile: GREECE

ANALYST

Analyst: Nondas Nicolaides

INTERACTIVE SCORECARD

Create scenarios and peer benchmarks

LONG TERM DEBT
Rating: (P)Caa3, Not on Watch
Type: Senior Unsecured MTN - Dom Curr
Date: 26 Jun 2017

LONG TERM DEPOSIT
Rating: Caa3, Not on Watch
Type: LT Bank Deposits - Fgn Curr
Outlook: Stable
Date: 26 Jun 2017

SHORT TERM DEPOSIT
Rating: NP, Not on Watch
Type: ST Bank Deposits - Fgn Curr
Date: 26 Jun 2017

COUNTERPARTY RISK ASSESSMENT
Long-term: Caa2(cr), Not on Watch
Short-term: NP(cr), Not on Watch

BASELINE CREDIT ASSESSMENT
Rating: caa2, Not on Watch
Date: 26 Jun 2017

ADJ BASELINE CREDIT ASSESSMENT
Rating: caa2, Not on Watch
Date: 26 Jun 2017

OTHER DEBTS ON WATCH?
No

Research | Ratings | Family Tree | Market Signals

Rating Class Detail | Debt List | Issuer Outlook

Scorecard | Export (CSV) | Results: 10

Class	Rating	Rating Action	Date	Outlook
LT Bank Deposits (Foreign)	Caa3	RATING AFFIRMATION	26 Jun 2017	Stable
Subordinate MTN (Domestic)	(P)Caa3	Upgrade	26 Jun 2017	
Senior Unsecured MTN (Domestic)	(P)Caa3	Upgrade	26 Jun 2017	
ST Bank Deposits (Domestic)	NP	RATING AFFIRMATION	26 Jun 2017	
ST Bank Deposits (Foreign)	NP	RATING AFFIRMATION	26 Jun 2017	
Baseline Credit Assessment	caa2	Upgrade	26 Jun 2017	

Rating Class History: **Adjusted Baseline Credit Assessment**

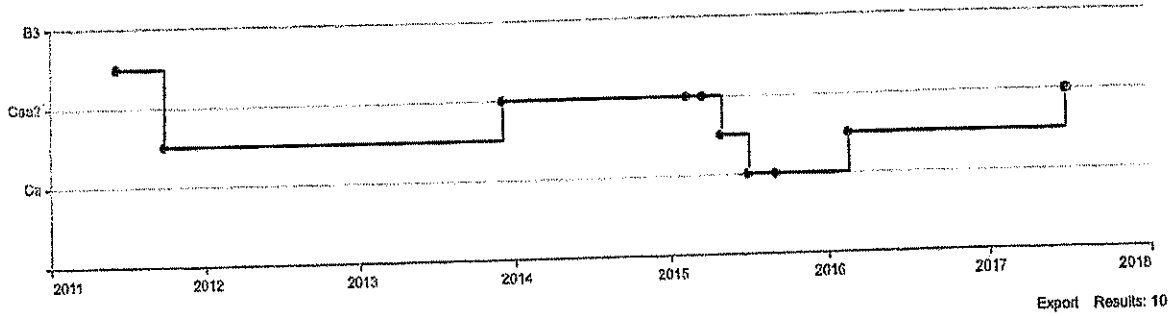

Export Results: 10

Date	Currency	Rating	Rating Action
26 Jun 2017		caa2	Upgrade
19 Feb 2016		caa3	Upgrade
04 Sep 2015		ca	RATING AFFIRMATION
02 Jul 2015		ca	Downgrade
30 Apr 2015		caa3	Downgrade
17 Mar 2015		caa2	On Watch - Possible Downgrade
09 Feb 2015		caa2	RATING AFFIRMATION
06 Dec 2013		caa2	Upgrade
23 Sep 2011		caa3	Downgrade
05 Jun 2011		caa1	New

For credit ratings that are derived exclusively from an existing credit rating of a program, series, category/class of debt, support provider or primary rated entity, or that replace a previously assigned provisional rating at the same rating level, Moody's publishes a rating announcement on that series, category/class of debt or program as a whole, on the support provider or primary rated entity, or on the provisional rating, but often does not publish a specific rating announcement on each subsequent bond or note for which the credit rating is derived from the existing credit rating. Rating announcements are usually press releases classified as Rating Actions on www.moodys.com. Please refer to the Research tab on the issuer/entity page for the rating announcement.

GEORGIOS KARKANIAS PRESIDENT

03/12/18

About Moody's | Careers | Regulatory Affairs | Terms of Use | Contact Us

Find ratings, research, analysts and more | GO

Welcome VASILIS KARKANIS | Profile

Research & Ratings | Products & Solutions | News & Events | My Portfolios | My Alerts | My Events | Log Out

Piraeus Bank S.A.

Ticker: TPEIR Moody's Org ID: 600044265 Market Segment: Financial Institutions Industry: NON-U.S. BANK
Domicile: GREECE

ANALYST

Analyst: Nondas Nicolaidis

LONG TERM DEBT
Rating: (P)Caa3, Not on Watch
Type: Senior Unsecured MTN - Dom Curr
Date: 26 Jun 2017

LONG TERM DEPOSIT
Rating: Caa3, Not on Watch
Type: LT Bank Deposits - Fgn Curr
Outlook: Stable
Date: 26 Jun 2017

SHORT TERM DEPOSIT
Rating: NP, Not on Watch
Type: ST Bank Deposits - Fgn Curr
Date: 26 Jun 2017

INTERACTIVE SCORECARD

Create scenarios and peer benchmarks

COUNTERPARTY RISK ASSESSMENT
Long-term: Caa2(cr), Not on Watch
Short-term: NP(cr), Not on Watch

BASELINE CREDIT ASSESSMENT
Rating: caa2, Not on Watch
Date: 26 Jun 2017

ADJ BASELINE CREDIT ASSESSMENT
Rating: caa2, Not on Watch
Date: 26 Jun 2017

OTHER DEBTS ON WATCH?
No

Research | Ratings | Family Tree | Market Signals

Rating Class Detail | Debt List | Issuer Outlook

Scorecard | Export (CSV) | Results: 10

Class	Rating	Rating Action	Date	Outlook
LT Bank Deposits (Foreign)	Caa3	RATING AFFIRMATION	26 Jun 2017	Stable
Subordinate MTN (Domestic)	(P)Caa3	Upgrade	26 Jun 2017	
Senior Unsecured MTN (Domestic)	(P)Caa3	Upgrade	26 Jun 2017	
ST Bank Deposits (Domestic)	NP	RATING AFFIRMATION	26 Jun 2017	
ST Bank Deposits (Foreign)	NP	RATING AFFIRMATION	26 Jun 2017	
Baseline Credit Assessment	caa2	Upgrade	26 Jun 2017	

Rating Class History: Baseline Credit Assessment

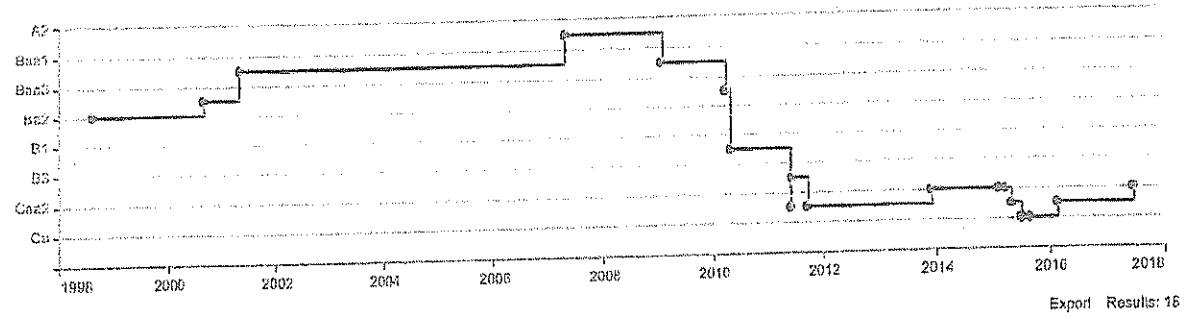

Export Results: 18

Date	Currency	Rating	Rating Action
26 Jun 2017		caa2	Upgrade
19 Feb 2016		caa3	Upgrade
04 Sep 2015		ca	RATING AFFIRMATION
02 Jul 2015		c	Downgrade
30 Apr 2015		caa3	Downgrade
17 Mar 2015		caa2	On Watch - Possible Downgrade
09 Feb 2015		caa2	RATING AFFIRMATION
06 Dec 2013		caa2	Upgrade
23 Sep 2011		caa3	Downgrade
05 Jun 2011		caa1	Upgrade
03 Jun 2011		caa3	Downgrade
30 Apr 2010		b2	Downgrade
31 Mar 2010		ba1	Downgrade
03 Feb 2009		baa2	Downgrade
24 Apr 2007		a3	Upgrade
04 May 2001		baa2	Upgrade
01 Sep 2000		ba1	Upgrade
05 Aug 1998		ba2	New

For credit ratings that are derived exclusively from an existing credit rating of a program, series, category/class of debt, support provider or primary rated entity, or that replace a previously assigned provisional rating at the same rating level, Moody's publishes a rating announcement on that series, category/class of debt or program as a whole, on the support provider or primary rated entity, or on the provisional rating, but often does not publish a specific rating announcement on each subsequent bond or note for which the credit rating is derived from the existing credit rating. Rating announcements are usually press releases classified as Rating Actions on www.moodys.com. Please refer to the Research tab on the Issuer/entity page for the rating announcement.

GEORGIOS KARASSIAS PRESIDENT

03/12/18

Moody's Integrity Hotline

EU
001-800-506-1440

Japan
KDDI: 00-539-111 then 888-320-1668
NTT: 0034-811-001 then 888-320-1668

Outside of the EU and Japan
1-866-330-MDYS (6397)

Browse By
Home
Research & Ratings
Products & Solutions
News & Events
Careers

Contact Us
Help & Support
Contact Us
Submit a Complaint

Terms & Conditions
Terms of Use
Privacy Policy
Proprietary Rights

© 2017 Moody's Investors Service, Inc., Moody's Analytics, Inc. and/or their affiliates and licensors. All rights reserved.

Regional Sites: Global

GEORGIOS ~~KERKANTAS~~
PRESIDENT

03/12/18

About Moody's | Careers | Regulatory Affairs | Terms of Use | Contact Us

Find ratings, research, analysts and more GO

Welcome VASILIKI KARKANIA Profile

Research & Ratings Products & Solutions News & Events

My Portfolios | My Alerts My Events Log Out

Piraeus Bank S.A.

Ticker: TPEIR Moody's Org ID: 600044265 Market Segment: Financial Institutions Industry: NON-U.S. BANK
Domicile: GREECE

ANALYST

Analyst: Nondas Nicolaides

LONG TERM DEBT
Rating: (P)Caa3, Not on Watch
Type: Senior Unsecured MTN - Dom Curr
Date: 26 Jun 2017

LONG TERM DEPOSIT
Rating: Caa3, Not on Watch
Type: LT Bank Deposits - Fgn Curr
Outlook: Stable
Date: 26 Jun 2017

SHORT TERM DEPOSIT
Rating: NP, Not on Watch
Type: ST Bank Deposits - Fgn Curr
Date: 26 Jun 2017

INTERACTIVE SCORECARD

Create scenarios and peer benchmarks

COUNTERPARTY RISK ASSESSMENT
Long-term: Caa2(cr), Not on Watch
Short-term: NP(cr), Not on Watch

BASELINE CREDIT ASSESSMENT
Rating: caa2, Not on Watch
Date: 26 Jun 2017

ADJ BASELINE CREDIT ASSESSMENT
Rating: caa2, Not on Watch
Date: 26 Jun 2017

OTHER DEBTS ON WATCH?
No

Research | Ratings | Family Tree | Market Signals

Rating Class Detail | Debt List | Issuer Outlook

Scorecard | Export (CSV) | Results: 10

Class	Rating	Rating Action	Date	Outlook
Counterparty Risk Assessment	Caa2(cr)	Upgrade	26 Jun 2017	
Counterparty Risk Assessment	NP(cr)	RATING AFFIRMATION	26 Jun 2017	
LT Bank Deposits (Domestic)	Caa3	RATING AFFIRMATION	26 Jun 2017	Stable
LT Bank Deposits (Foreign)	Caa3	RATING AFFIRMATION	26 Jun 2017	Stable
Subordinate MTN (Domestic)	(P)Caa3	Upgrade	26 Jun 2017	
Senior Unsecured MTN (Domestic)	(P)Caa3	Upgrade	26 Jun 2017	

Rating Class History: LT Bank Deposits (Domestic)

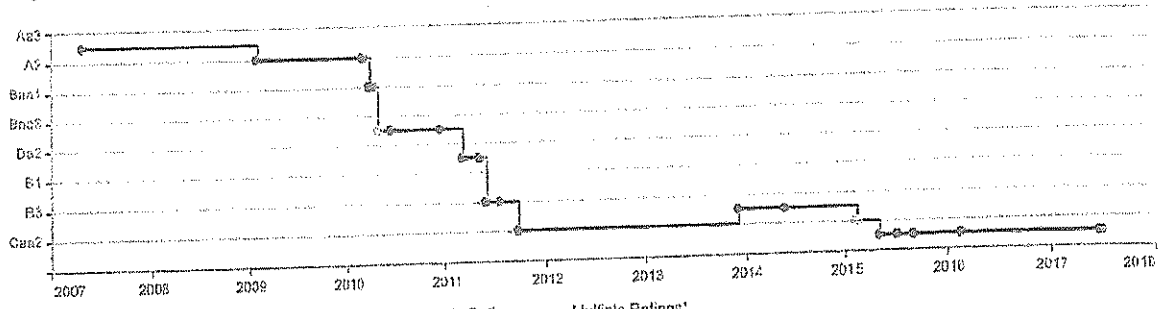

Single Rating Multiple Ratings*

*This debt class has multiple ratings. For more details, check the Debt List.

Export Results: 23

Date	Currency	Rating	Rating Action
26 Jun 2017	Domestic	Caa3	RATING AFFIRMATION
19 Feb 2016	Domestic	Caa3	RATING AFFIRMATION
04 Sep 2015	Domestic	Caa3	CONFIRMED
02 Jul 2015	Domestic	Caa3	On Watch - Possible Downgrade
30 Apr 2015	Domestic	Caa3	Downgrade
09 Feb 2015	Domestic	Caa2	On Watch - Possible Downgrade
09 Feb 2015	Domestic	Caa2	Downgrade
29 May 2014	Domestic	Caa1	RATING AFFIRMATION
06 Dec 2013	Domestic	Caa1	Upgrade
23 Sep 2011	Domestic	Caa2	Downgrade
25 Jul 2011	Domestic	B3	On Watch - Possible Downgrade
03 Jun 2011	Domestic	B3	Downgrade
10 May 2011	Domestic	Ba3	On Watch - Possible Downgrade
09 Mar 2011	Domestic	Ba3	Downgrade
17 Dec 2010	Domestic	Ba1	On Watch - Possible Downgrade
15 Jun 2010	Domestic	Ba1	CONFIRMED
30 Apr 2010	Domestic	Ba1	Downgrade
30 Apr 2010	Domestic	Ba1	On Watch - Possible Downgrade
23 Apr 2010	Domestic	Baa1	On Watch - Possible Downgrade
31 Mar 2010	Domestic	Baa1	Downgrade
03 Mar 2010	Domestic	A2	On Watch - Possible Downgrade
03 Feb 2009	Domestic	A2	Downgrade
24 Apr 2007	Domestic	A1	New

GEORGIOS KARKANTAS
PRESIDENT

03/12/18

For credit ratings that are derived exclusively from an existing credit rating of a program, series, category/class of debt, support provider or primary rated entity, or that replace a previously assigned provisional rating at the same rating level, Moody's publishes a rating announcement on that series, category/class of debt or program as a whole, on the support provider or primary rated entity, or on the provisional rating, but often does not publish a specific rating announcement on each subsequent bond or note for which the credit rating is derived from the existing credit rating. Rating announcements are usually press releases classified as Rating Actions on www.moodys.com. Please refer to the Research tab on the issuer/entity page for the rating announcement.

Moody's Integrity Hotline

EU
001-800-506-1440

Japan
KDDI: 00-539-111 then 866-320-1668
NTT: 0034-811-001 then 866-320-1668

Outside of the EU and Japan
1-866-330-MDYS (6397)

Browse By
Home
Research & Ratings
Products & Solutions
News & Events
Careers

Contact Us
Help & Support
Contact Us
Submit a Complaint

Terms & Conditions
Terms of Use
Privacy Policy
Proprietary Rights

© 2017 Moody's Investors Service, Inc., Moody's Analytics, Inc. and/or their affiliates and licensors. All rights reserved.

Regional Sites: Global

GEORGIOS KARKANIAS
PRESIDENT

9

03/12/18